Form No. 3421-373 Rev A

TORO®

Count on it.

Parts Catalog

# CM-658H-S

## Concrete Mixer

**Model No. 68004—Serial No. 402000000 and Up**

Register at www.Toro.com.
Original Instructions (EN)

*3421-373* A

# Ordering Replacement Parts

To order replacement parts, please supply the part number, the quantity, and the description of each part desired.

**Understanding Reference Numbers**

Each identified part in an illustration has a reference number. The reference number for a part also appears in the parts list, along with other information about the part.

This catalog uses two special reference number formats, one to indicate parts in a service assembly and another to indicate the quantity of a given part in an illustration.

**Service Assembly Reference Numbers**

Parts in service assemblies have reference numbers in the form a:b. The a represents the reference number of the entire service assembly and the b represents a sequential number unique to each part within the service assembly.

For example, a wheel assembly might be identified by reference number 6, the tire by 6:1, the valve by 6:2, and the wheel by 6:3. When you order the assembly identified by reference number 6, you receive all parts identified by reference numbers 6:1,6:2, and 6:3. However, you may also order any part individually. Reference numbers of this type appear in illustration and in parts lists.

**Reference Numbers Indicating Quantity**

In an illustration, if a reference number indicates more than one part, the reference number has the form nX y. The n represents the quantity of the part, the X is the multiplication symbol, and the y represents the reference number.

For example, in an illustration, the reference number 2X 37 means that two of the parts identified by reference number 37 are indicated.

# Contents

Frame and Yoke Assembly . . . . . 4
Axle Assembly . . . . . 6
Hub Assembly No. 125-8171 . . . . . 8
Engine Assembly . . . . . 10
Drum Assembly . . . . . 12
Cowl Assembly . . . . . 14
Attachments and Accessories . . . . . 16

**© 2018—The Toro® Company**
**8111 Lyndale Avenue South**
**Bloomington, MN 55420**



**Contact us at www.Toro.com.**
**Printed in the USA.**
**All Rights Reserved**

# Frame and Yoke Assembly

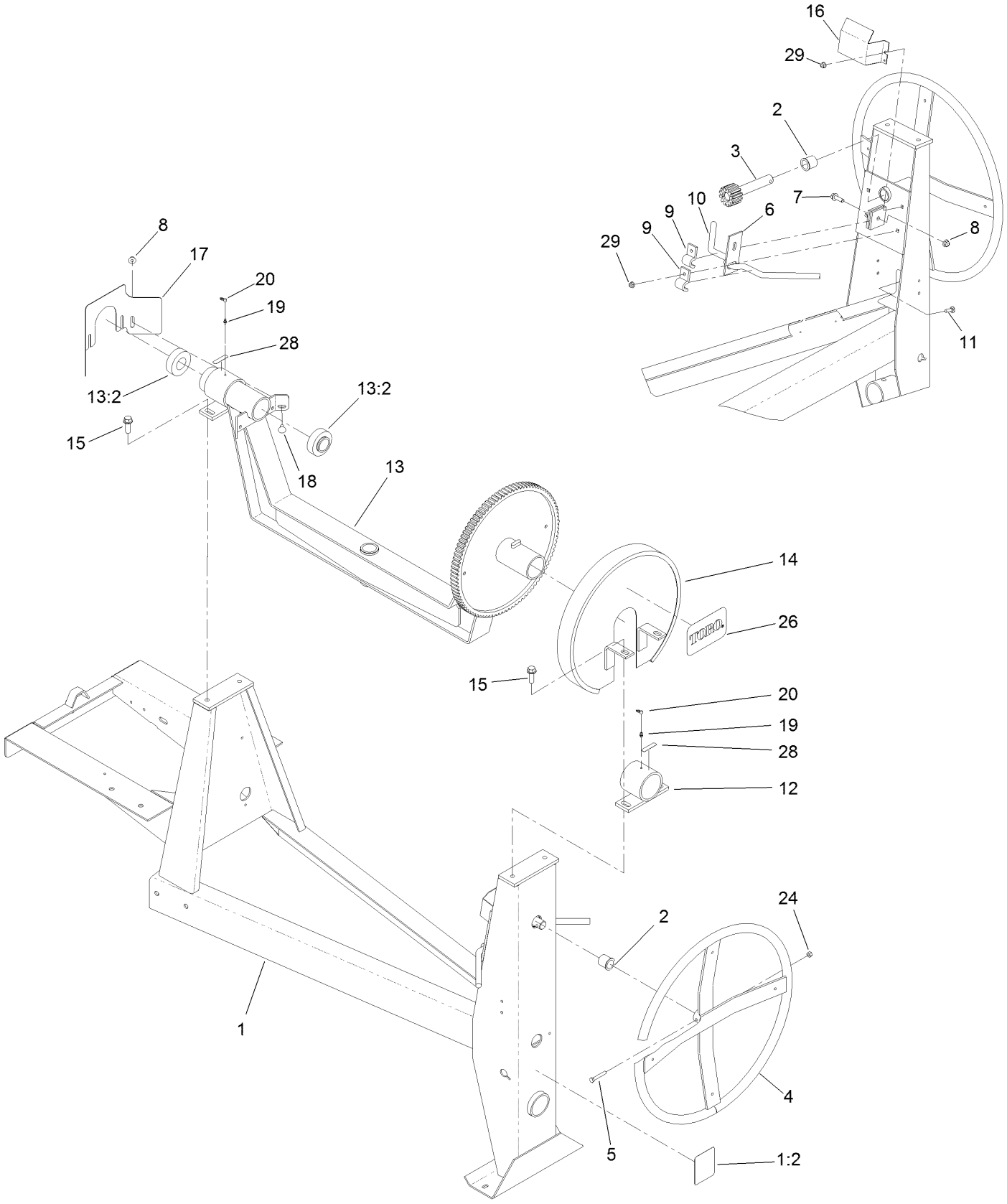

# Frame and Yoke Assembly (continued)

| Ref. | Part Number | Qty. | Description |
|---|---|---|---|
| 1 | 127-2813 | 1 | Frame ASM |
| 1:2 | 125-8216 | 1 | Decal-Safety Chain, Towing |
| 2 | ST32032 | 2 | Bushing-Nylon |
| 3 | ST22029 | 1 | Shaft-Tilt |
| 4 | ST22096-03 | 1 | Handwheel |
| 5 | 322-10 | 1 | Screw-HH |
| 6 | ST27619-03 | 1 | Dog-Brake |
| 7 | 3234-24 | 1 | Screw-HHF |
| 8 | 104-8301 | 3 | Nut-HF, NI |
| 9 | ST27559-03 | 2 | Bracket-Handle |
| 10 | ST27621 | 1 | Handle-Brake |
| 11 | 3230-2 | 4 | Bolt-CARR |
| 12 | ST24349-03 | 2 | Trunnion |
| 13 | 125-6307 | 1 | Yoke ASM |
| 13:2 | ST32039 | 2 | Bearing |
| 14 | ST27617-03 | 1 | Guard-Brake, Upper |
| 15 | ST80031 | 4 | Screw-HWH |
| 16 | ST27618-03 | 1 | Guard-Brake, Lower |
| 17 | 130-2208-03 | 1 | Guard-Pinion |
| 18 | 3231-21 | 2 | Screw-CARR |
| 19 | ST46042 | 2 | Fitting-Grease |
| 20 | ST47001 | 2 | Cap-Plug |
| 24 | 3296-29 | 1 | Nut-Lock, NI |
| 26 | 99-4693 | 1 | Decal |
| 28 | 125-8175 | 2 | Decal-Grease |
| 29 | 104-8300 | 4 | Nut-HF, NI |

# Axle Assembly

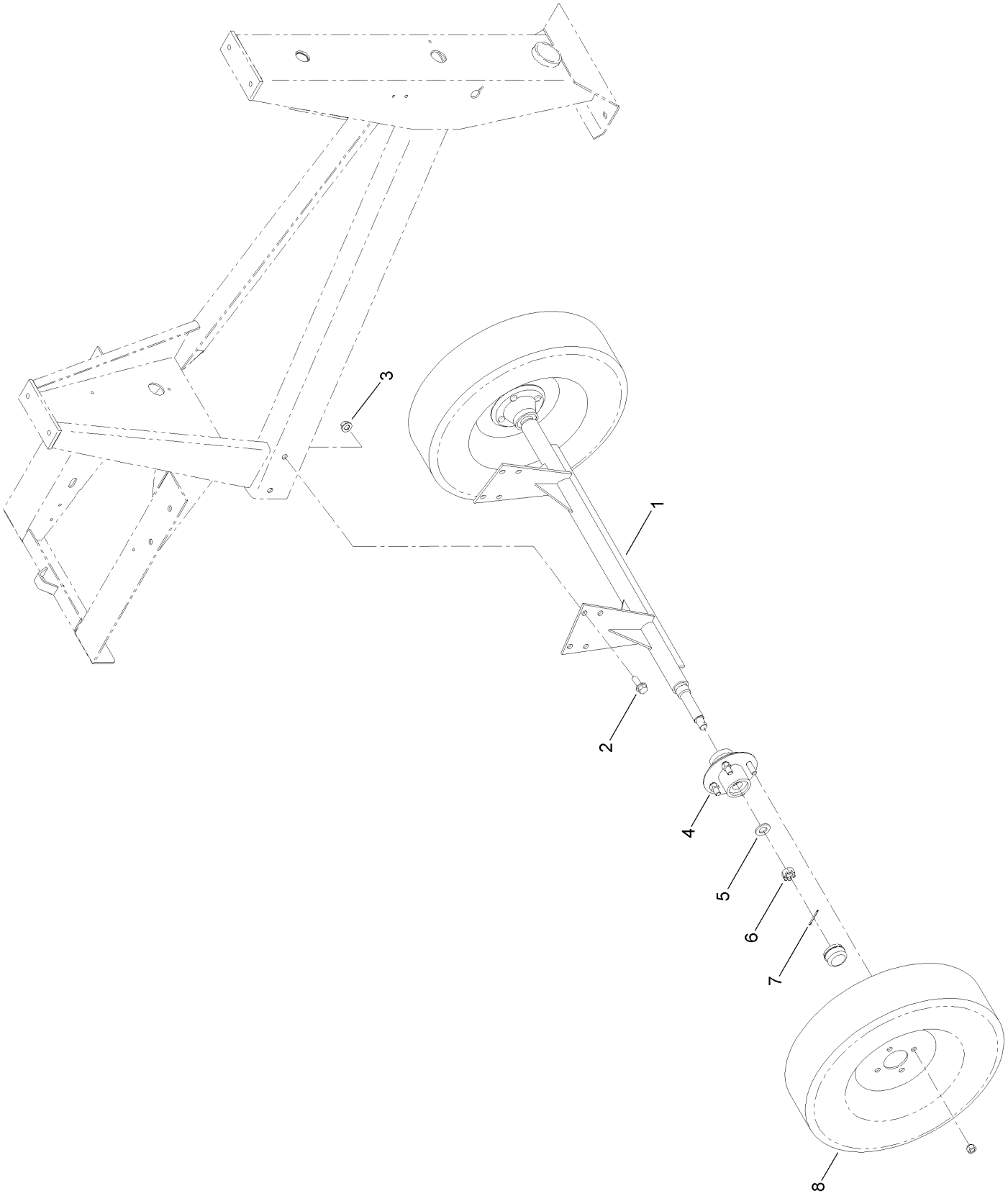

# Axle Assembly (continued)

| Ref. | Part Number | Qty. | Description |
|---|---|---|---|
| 1 | ST22031-03 | 1 | Axle |
| 2 | 100-6116 | 4 | Screw-HHF |
| 3 | 99-5107 | 4 | Nut-Lock |
| 4 | 125-8171 | 2 | Hub ASM |
| 5 | 3256-28 | 2 | Washer-Flat |
| 6 | ST80054 | 2 | Nut |
| 7 | 3272-13 | 2 | Pin-Cotter |
| 8 | ST32306 | 2 | Tire And Rim ASM |

# Hub Assembly No. 125-8171

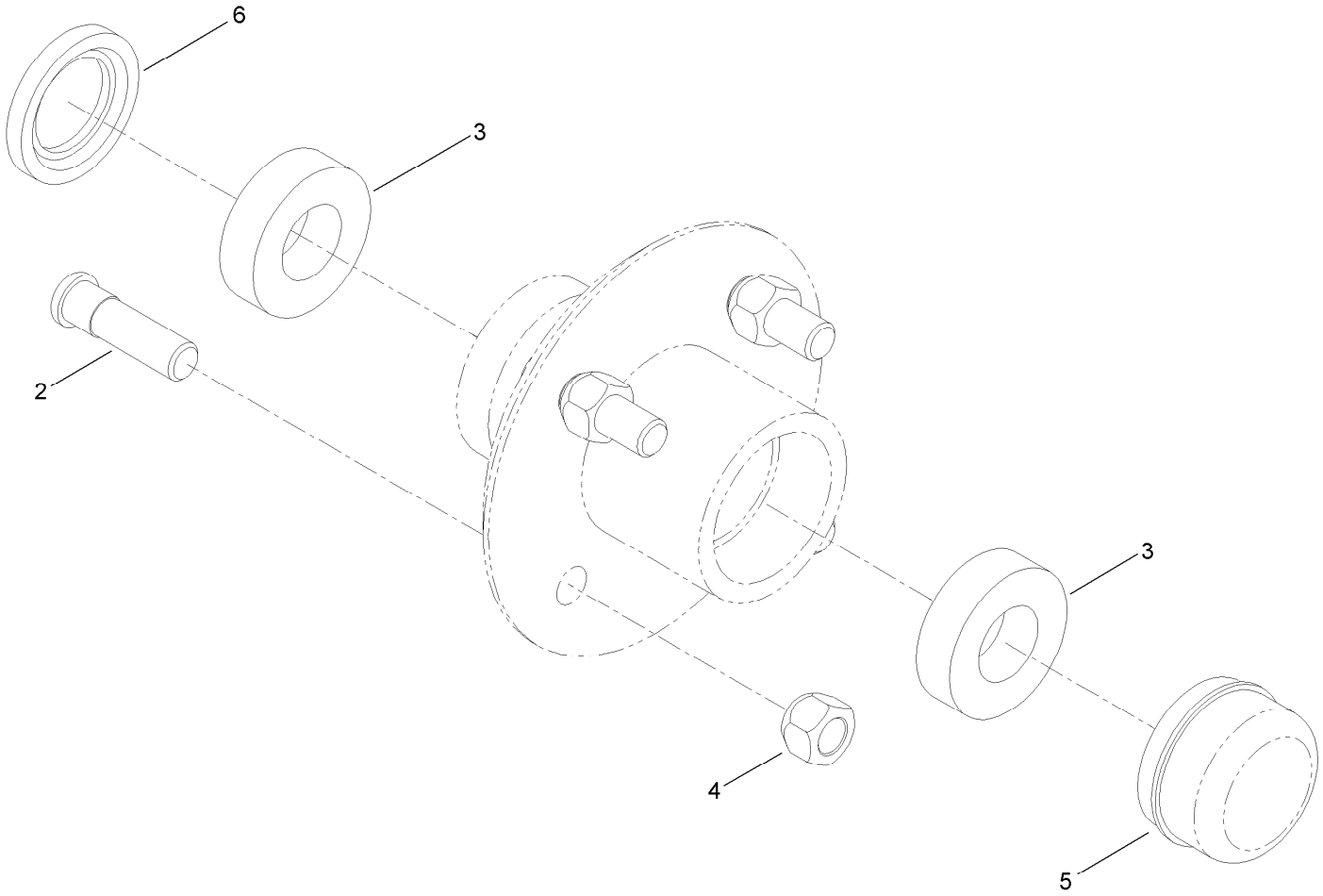

# Hub Assembly No. 125-8171 (continued)

| Ref. | Part Number | Qty. | Description |
|---|---|---|---|
| 2 | ST39190 | 4 | Stud-Wheel |
| 3 | ST32233 | 2 | Bearing-Roller |
| 4 | ST80045 | 4 | Nut-Lug |
| 5 | ST34573 | 1 | Cap-Dust |
| 6 | ST32052 | 1 | Seal-Hub, Wheel |

# Engine Assembly

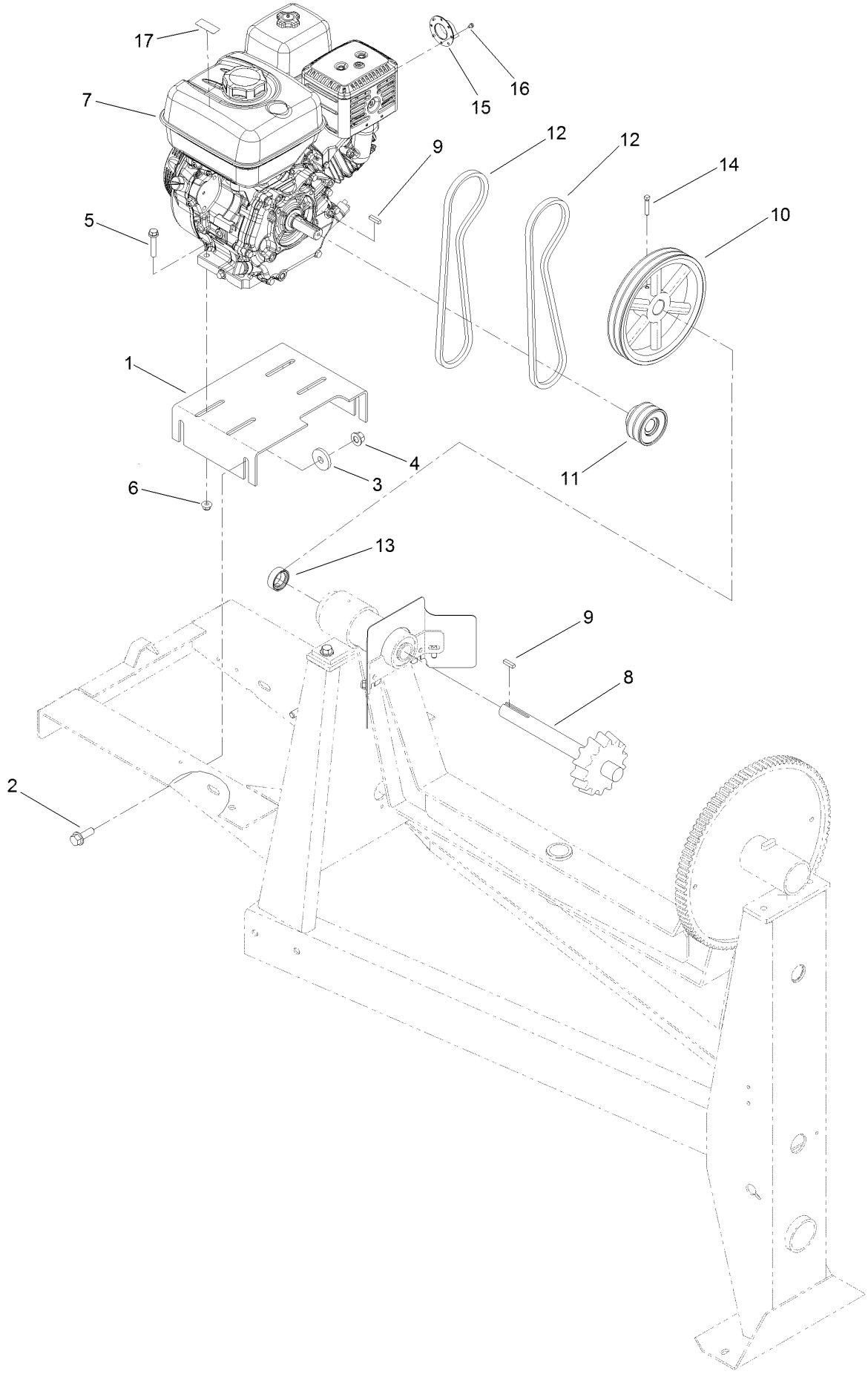

# Engine Assembly (continued)

| Ref. | Part Number | Qty. | Description |
|---|---|---|---|
| 1 | ST28040-03 | 1 | Base-Motor |
| 2 | 100-6116 | 4 | Screw-HHF |
| 3 | ST26326 | 4 | Washer-Flat |
| 4 | 99-5107 | 4 | Nut-Lock |
| 5 | 108-3742 | 4 | Screw-HHF |
| 6 | 104-8301 | 4 | Nut-HF, NI |
| 7 | 125-4812 | 1 | Engine-Honda, Gx240 ● |
| 8 | ST21487 | 1 | Shaft-Drive |
| 9 | 5-7280 | 2 | Key |
| 10 | ST34986-03 | 1 | Sheave |
| 11 | ST34984 | 1 | Sheave |
| 12 | 127-0075 | 2 | Belt-V |
| 13 | ST32176 | 1 | Collar-Locking |
| 14 | 909546 | 2 | Screw-Set |
| 15 | 120-1886 | 1 | Deflector-Exhaust, Honda |
| 16 | 127-7578 | 3 | Screw-HWH |
| 17 | 130-8322 | 1 | Decal-Warning, Ethanol |

● Obtain parts from www.honda-engines.com

# Drum Assembly

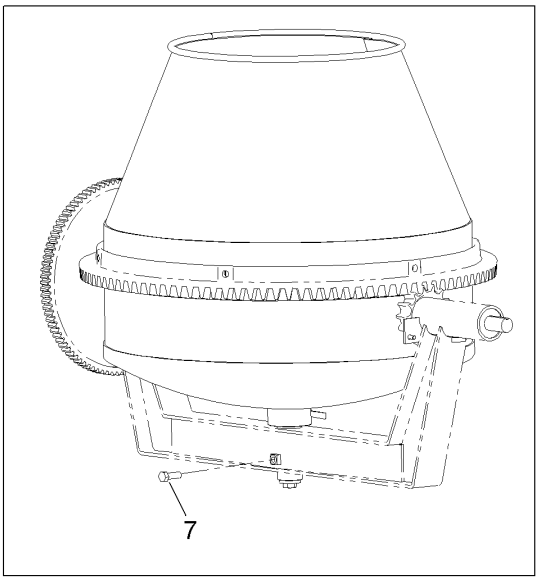


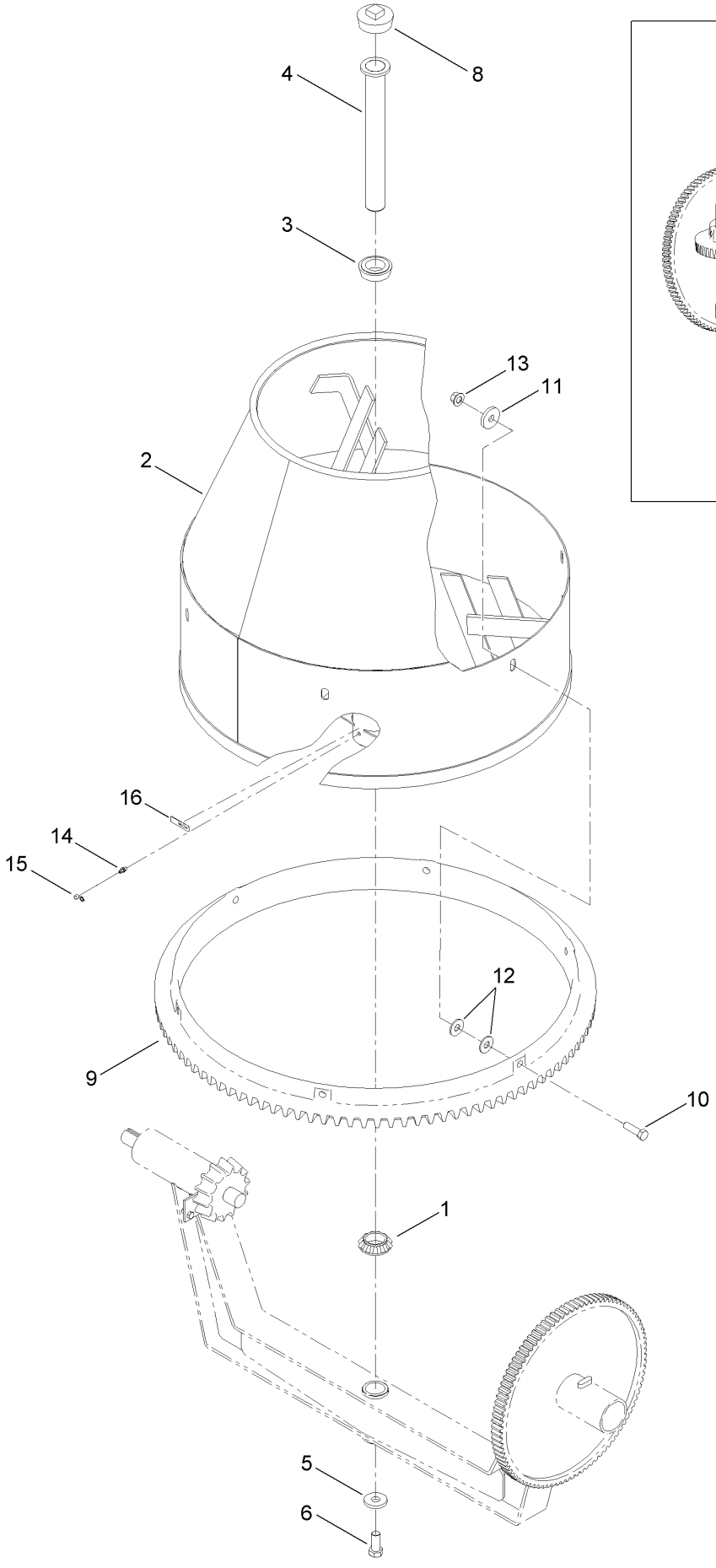

# Drum Assembly (continued)

| Ref. | Part Number | Qty. | Description |
|---|---|---|---|
| 1 | ST32161 | 1 | Bearing-Roller |
| 2 | 125-6305-01 | 1 | Drum |
| 3 | ST32086 | 1 | Bearing |
| 4 | ST27267 | 1 | Spindle |
| 5 | ST27413 | 1 | Washer-Flat |
| 6 | 327-4 | 1 | Screw-HH |
| 7 | 325-6 | 1 | Screw-HH |
| 8 | ST46022 | 1 | Plug |
| 9 | ST26095-01 | 1 | Gear-Ring |
| 10 | 325-7 | 6 | Screw-HH |
| 11 | ST26326 | 6 | Washer-Flat |
| 12 | 3256-6 | 12 | Washer-Flat |
| 13 | 99-5107 | 6 | Nut-Lock |
| 14 | ST46057 | 1 | Fitting |
| 15 | ST47001 | 1 | Cap-Plug |
| 16 | 125-8175 | 1 | Decal-Grease |

# Cowl Assembly

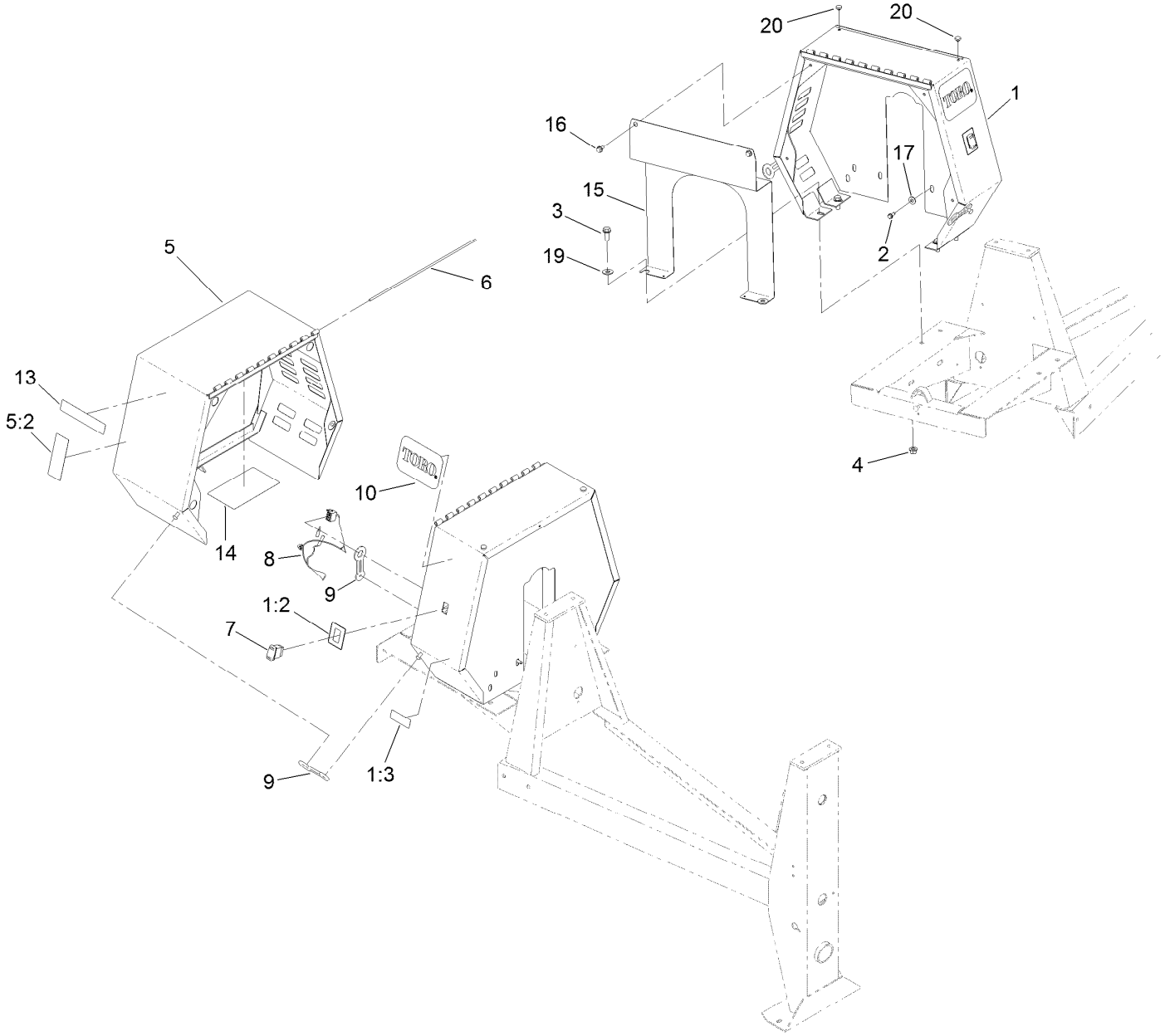

# Cowl Assembly (continued)

| Ref. | Part Number | Qty. | Description |
|---|---|---|---|
| 1 | 127-2811 | 1 | Stationary Cowl ASM |
| 1:2 | 125-4940 | 1 | Decal-Stop, Engine |
| 1:3 | 117-2718 | 1 | Decal-Arrester, Spark |
| 2 | 701243 | 2 | Screw-Thd Roll, HWH |
| 3 | 3234-38 | 4 | Screw-HHF |
| 4 | 99-5107 | 4 | Nut-Lock |
| 5 | 127-1685 | 1 | Movable Cowl ASM |
| 5:2 | 125-4939 | 1 | Decal-Warning |
| 6 | ST44368 | 1 | Pin |
| 7 | 95-8999 | 1 | Switch |
| 8 | 125-4877 | 1 | Harness-Wire, Mixer |
| 9 | ST47182 | 3 | Latch-Rubber |
| 10 | 67-7320 | 2 | Decal |
| 13 | 125-4936 | 2 | Decal |
| 14 | 132-4041 | 1 | Decal-Service |
| 15 | 125-8218-03 | 1 | Plate-Engine |
| 16 | 110-9380 | 2 | Screw-HWH |
| 17 | 3256-4 | 2 | Washer-Flat |
| 19 | 3256-6 | 2 | Washer-Flat |
| 20 | 1-513658 | 2 | Bumper |

# Attachments and Accessories

## For 68004 CM-658H-S Concrete Mixer

| Product Name | Model/Part |
|---|---|
| 31in Forged Tow Pole Hitch | 68056 |
| 31in Pintel Tow Pole Hitch | 68058 |
| 31in Stamped Tow Pole Hitch | 68060 |
| Trailer Light Kit | 68062 |

## Notes:

## Notes:

## Notes:




**Count on it.**