Form No. 3421-173 Rev B

TORO®

Count on it.

Operator's Manual

MB-1600 Mud Buggy

Model No. 68038—Serial No. 402350000 and Up

Model No. 68038G—Serial No. 402350000 and Up

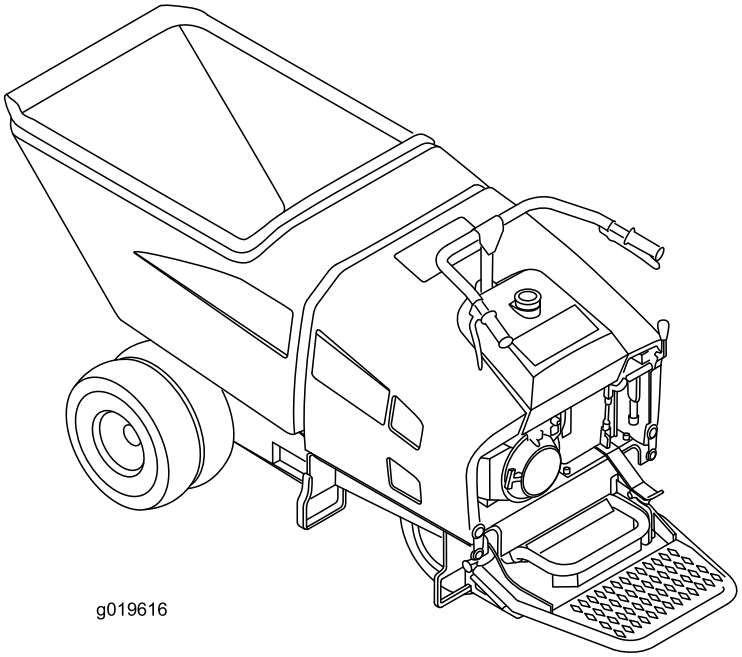

g019616

Register at www.Toro.com.
Original Instructions (EN)

3421-173 B

⚠ WARNING

CALIFORNIA
Proposition 65 Warning

This product contains a chemical or chemicals known to the State of California to cause cancer, birth defects, or reproductive harm.

The engine exhaust from this product contains chemicals known to the State of California to cause cancer, birth defects, or other reproductive harm.

Because in some areas there are local, state, or federal regulations requiring that a spark arrester be used on the engine of this machine, a spark arrester is available as an option. If you require a spark arrester, contact your Authorized Service Dealer.

Genuine Toro spark arresters are approved by the USDA Forestry Service.

It is a violation of California Public Resource Code Section 4442 to use or operate the engine on any forest-covered, brush-covered, or grass-covered land without a spark arrester muffler maintained in working order, or the engine constricted, equipped, and maintained for the prevention of fire. Other states or federal areas may have similar laws.

The enclosed engine owner's manual is supplied for information regarding the US Environmental Protection Agency (EPA) and the California Emission Control Regulation of emission systems, maintenance, and warranty. Replacements may be ordered through the engine manufacturer.

Introduction

This machine is intended to be used by professional, hired operators in commercial applications. This machine is a stable, reliable, and productive machine for carrying and moving materials for any job site. It is primarily designed to move concrete, mortar, gravel, dirt, or debris around job sites.

Read this information carefully to learn how to operate and maintain your product properly and to avoid injury and product damage. You are responsible for operating the product properly and safely.

You may contact Toro directly at www.Toro.com for product and accessory information, help finding a dealer, or to register your product.

Whenever you need service, genuine Toro parts, or additional information, contact an Authorized Service Dealer or Toro Customer Service and have the model and serial numbers of your product ready. Figure 1 identifies the location of the model and serial numbers on the product. Write the numbers in the space provided.

Important: **With your mobile device, you can scan the QR code on the serial number decal (if equipped) to access warranty, parts, and other product information.**

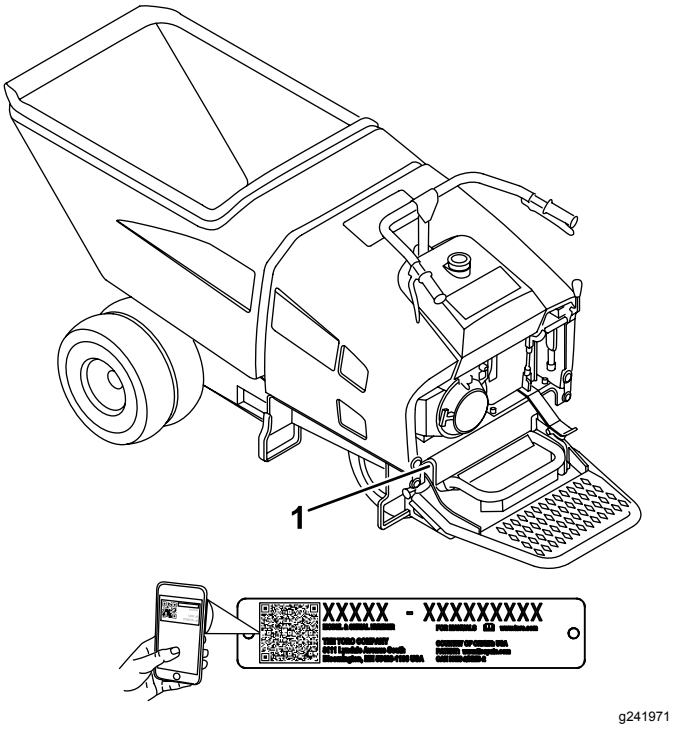

Figure 1

1. Model and serial number location

Model No. _____

Serial No. _____

© 2017—The Toro® Company
8111 Lyndale Avenue South
Bloomington, MN 55420

Contact us at www.Toro.com.
Printed in the USA
All Rights Reserved

This manual identifies potential hazards and has safety messages identified by the safety alert symbol (Figure 2), which signals a hazard that may cause serious injury or death if you do not follow the recommended precautions.

g000502

Figure 2

1. Safety-alert symbol

This manual uses 2 words to highlight information. **Important** calls attention to special mechanical information and **Note** emphasizes general information worthy of special attention.

Contents

Safety 4
Safe Operating Practices 4
Safety and Instructional Decals 7
Product Overview 10
Controls 10
Specifications 12
Operation 12
Adding Fuel 12
Checking the Machine-Fluid Levels 14
Starting the Engine 14
Shutting Off the Engine 14
Operating the Machine 14
Parking the Machine 16
Moving the Machine without Engine Power 16
Transporting the Machine 17
Lifting the Machine 17
Using the Quick-Release Tire Hubs 18
Maintenance 19
Recommended Maintenance Schedule(s) 19
Pre-Maintenance Procedures 20
Removing the Cowl 20
Lubrication 21
Greasing the Machine 21
Engine Maintenance 22
Checking the Engine-Oil Level 22
Servicing the Air Cleaner 22
Changing the Engine Oil 24
Replacing the Spark Plug 24
Fuel System Maintenance 25
Cleaning the Sediment Cup 25
Changing the Fuel Filter 26
Draining the Fuel Tank 27
Drive System Maintenance 27
Adjusting the Transmission Return to Neutral Position 27
Checking the Tires and Lug Nuts 28
Controls System Maintenance 28
Brake Maintenance 28
Hydraulic System Maintenance 30
Checking the Hydraulic-Fluid Level 30
Replacing the Hydraulic Filter 31
Changing the Hydraulic Fluid 32
Checking the Hydraulic Lines 33
Cleaning 33
Removing Debris from the Machine 33
Storage 34

Safety

Improper use or maintenance of the machine can result in injury. To reduce the potential for injury, comply with these safety instructions and always pay attention to the safety alert symbol ⚠, which means: **Caution**, **Warning**, or **Danger**—personal safety instruction. Failure to comply with the instruction may result in personal injury or death.

Safe Operating Practices

⚠ WARNING

Engine exhaust contains carbon monoxide, an odorless fuel that is lethal if inhaled.

Do not run the engine indoors or in an enclosed area.

Training

- Read the *Operator's Manual* and other training material. If the operator(s) or mechanic(s) cannot read or understand the information, it is the owner's responsibility to explain this material to them.
- Become familiar with the safe operation of the equipment, operator controls, and safety signs.
- All operators and mechanics should be trained. The owner is responsible for training the users.
- Never let children or untrained people operate or service the equipment. Local regulations may restrict the age of the operator.
- The owner/user can prevent and is responsible for accidents or injuries occurring to people or damage to property.

Preparation

- Wear appropriate clothing including hard hat, eye protection, long pants, substantial, slip-resistant footwear, and hearing protection. Tie back long hair. Do not wear loose jewelry.
- Inspect the area where the equipment is to be used and ensure that all objects are removed from the machine before use.
- Use extreme care in handling fuel. It is flammable and its vapors are explosive.
  - Extinguish all cigarettes, cigars, pipes, and other sources of ignition.
  - Use only an approved container.
  - Do not remove the fuel cap or fill the fuel tank while the engine is running or hot.
  - Do not add or drain the fuel in an enclosed space.
  - Do not store the machine or fuel container where there is an open flame, spark, or pilot light, such as on a water heater or other appliance.
  - If you spill fuel, do not attempt to start the engine; avoid creating any source of ignition until the fuel vapors have dissipated.
- Ensure that the shields of the machine are attached and functioning properly. Do not operate the machine unless they are functioning properly.

Operation

- Use your full attention while operating the machine. Do not engage in any activity that causes distractions; otherwise, injury or property damage may occur.
- Never run an engine in an enclosed area.
- Operate the machine only in good light, keeping away from holes and hidden hazards.
- Ensure that all drives are in neutral before starting the engine. Start the engine only from the operator's position.
- Do not operate the machine with the guards not securely in place. Ensure that all interlocks are attached, adjusted properly, and functioning properly.
- Do not change the engine governor setting or overspeed the engine.
- Stop the machine on level ground, engage the parking brake, lower the hopper, and shut off the engine before leaving the operator's position for any reason.
- Never carry passengers and keep pets and bystanders away.
- Slow down and use caution when making turns and crossing roads and sidewalks.
- Do not operate the machine while ill, tired, or under the influence of alcohol or drugs.
- Use care when loading or unloading the machine into a trailer or truck.
- Use care when approaching blind corners, shrubs, trees, or other objects that may obscure vision.
- Ensure that the area is clear of other people before operating the machine. Shut off the machine if anyone enters the area.
- Never leave a running machine unattended.
- Do not exceed the rated operating capacity, as the machine may become unstable which may result in loss of control.
- Never jerk the controls; use a steady motion.
- Watch for traffic when operating near or crossing roadways.

- Do not touch parts which may be hot from operation. Allow them to cool before attempting to maintain, adjust, or service.
- Check for overhead clearances (i.e., branches, doorways, electrical wires) before driving under any objects and do not contact them.
- Ensure that you operate the machine in areas where there are no obstacles close to you. Failure to maintain adequate distance from trees, walls, and other barriers may result in injury as the machine backs up during operation if you are not attentive to the surroundings. Operate the machine only in areas where there is sufficient clearance for you to safely maneuver the product.
- Locate the pinch point areas marked on the machine and keep hands and feet away from these areas.
- Lightning can cause severe injury or death. If lightning is seen or thunder is heard in the area, do not operate the machine; seek shelter.
- Do not overload the hopper and always keep the load level when operating the machine.

Slope Operation

- Slopes are a major factor related to loss-of-control and tip-over accidents, which can result in severe injury or death. The operator is responsible for safe slope operation. operating the machine on any slope requires extra caution. Before using the machine on a slope, you must:
  - Review and understand the slope instructions in the manual and on the machine.
  - Evaluate the site conditions of the day to determine if the slope is safe for machine operation. Always use common sense and good judgment when performing this evaluation. Changes in the terrain, such as moisture, can quickly affect the operation of the machine on a slope.
- Raising the hopper on a slope affects the stability of the machine. Keep the hopper in the lowered position when on slopes.
- When operating on a slope, fold the platform up and walk behind the machine until it is on flat ground.
- **Operate up and down slopes with the heavy end of the machine uphill.** Weight distribution changes with a full hopper. A full hopper makes the front of the machine the heavy end, so when on traveling up or down slopes with a full hopper, walk-behind the machine with the full hopper uphill.
- Identify hazards at the base of the slope. Do not operate the machine near drop-offs, ditches, embankments, water or other hazards. The machine could suddenly roll over if a wheel or track goes over the edge or the edge collapses. Keep a safe distance (twice the width of the machine) between the machine and any hazard.
- Avoid starting, stopping, or turning the machine on a slope. Avoid making sudden changes in speed or direction; turn slowly and gradually.
- Keep all movements on slopes slow and gradual. Do not make sudden changes in speed or direction.
- Do not operate the machine under any conditions where traction, steering, or stability is in question. Be aware that operating the machine on wet grass, across slopes or downhill may cause the machine to lose traction. Loss of traction to the wheels or tracks may result in sliding and a loss of braking and steering. The machine can slide even if the wheels or tracks are stopped.
- Remove or mark obstacles such as ditches, holes, ruts, bumps, rocks or other hidden hazards. Tall grass can hide obstacles. Uneven terrain could overturn the machine.
- If you lose control of the machine, step off and away from the direction of travel of the machine.

Maintenance and Storage

- Let the engine cool before storing and do not store the machine near an open flame.
- Engage the parking brake, shut off the engine, and wait for all movement to stop before adjusting, cleaning, or repairing the machine.
- Clean debris from drives, mufflers, and the engine to help prevent fires. Clean up oil or fuel spills.
- Do not store fuel near flames or drain indoors.
- Park the machine on level ground. Never allow untrained personnel to service the machine.
- Use jack stands to support components when required.
- Carefully release pressure from components with stored energy.
- Disconnect the battery, negative terminal first and positive terminal last, before making any repairs. Connect the battery positive terminal first and negative terminal last.
- Keep your hands and feet away from moving parts. If possible, do not make adjustments with the engine running.
- Charge batteries in an open, well-ventilated area, away from spark and flames. Unplug the charger before connecting or disconnecting it from the battery. Wear protective clothing and use insulated tools.
- Keep all parts in good working condition and all hardware tightened. Replace all worn or damaged decals.

- Use the cylinder lock to secure the hopper in the raised position.
- Keep nuts and bolts tight. Keep equipment in good condition.
- Never tamper with safety devices.
- Use only genuine Toro replacement parts to ensure that original standards are maintained.
- Battery acid is poisonous and can cause burns. Avoid contact with skin, eyes, and clothing. Protect your face, eyes, and clothing when working with a battery.
- Battery gases can explode. Keep cigarettes, sparks, and flames away from the battery.
- Keep your body and hands away from pinhole leaks or nozzles that eject high-pressure hydraulic fluid. Use cardboard or paper to find hydraulic leaks; never use your hands. Hydraulic fluid escaping under pressure can penetrate skin and cause injury, requiring surgery within a few hours by a qualified surgeon; otherwise, gangrene may result.

Safety and Instructional Decals

Safety decals and instructions are easily visible to the operator and are located near any area of potential danger. Replace any decal that is damaged or missing.

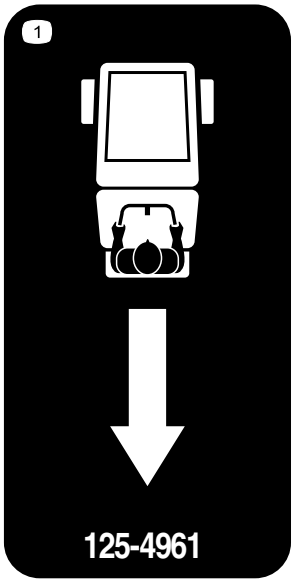

decal125-4961

125–4961

1. Reverse

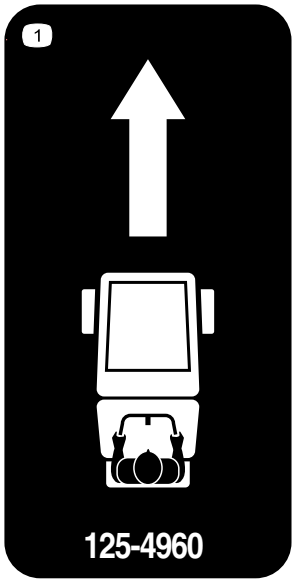

decal125-4960

125–4960

1. Forward

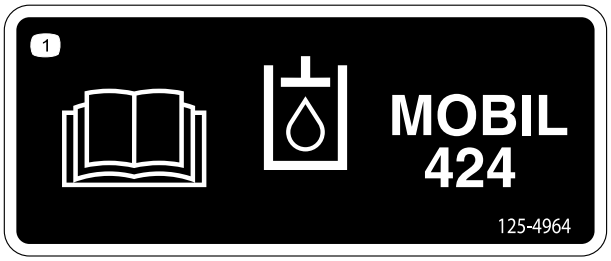

decal125-4964

125–4964

1. Read the *Operator's Manual* for oil information.

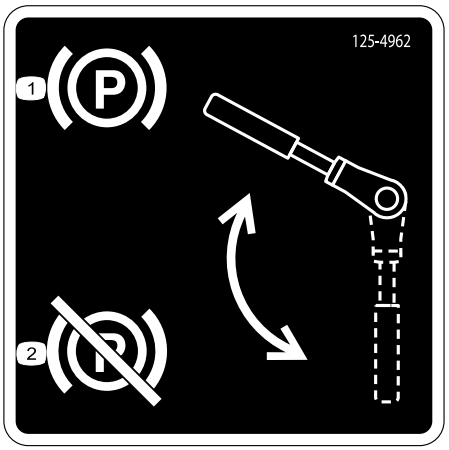

decal125-4962

125–4962

1. Engage the parking brake
2. Disengage the parking brake

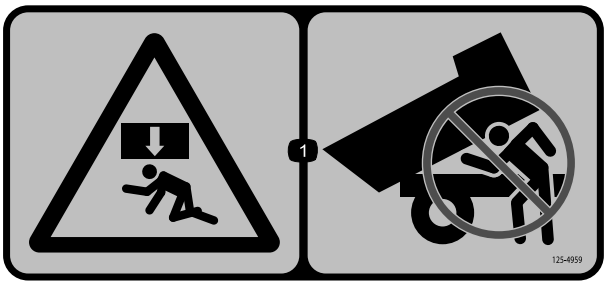

decal125-4959

125–4959

1. Crushing hazard—never place your head under the dump trailer.

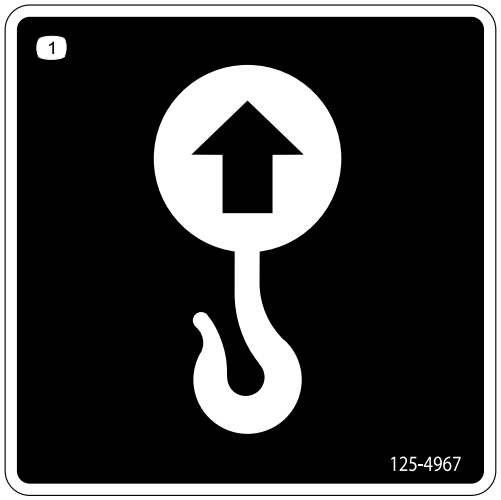

decal125-4967

125–4967

1. Lift point

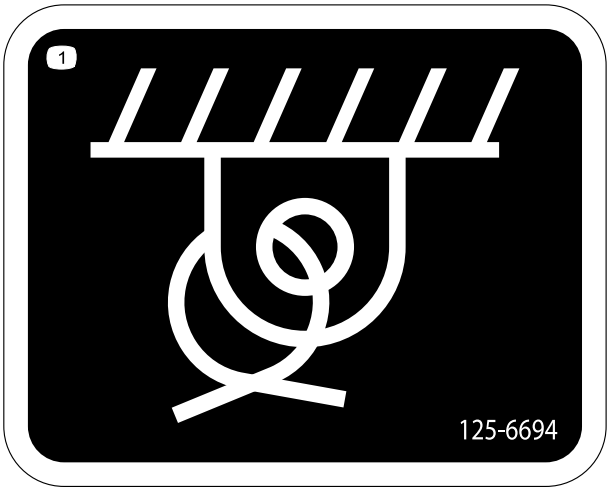

decal125-6694

125–6694

1. Tie down location

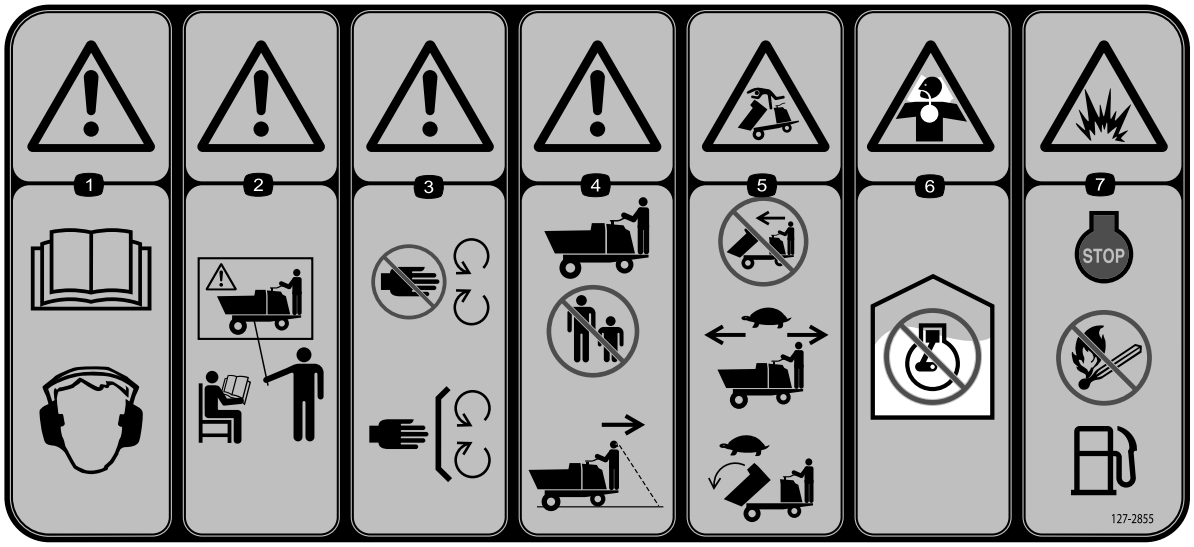

decal127-2855

127–2855

1. Warning—read the *Operator's Manual*; wear hearing protection.
2. Warning—do not operate the machine without proper training.
3. Warning—stay away from moving parts; keep all guards and shields in place.
4. Warning—keep bystanders away while operating the machine; check behind you when moving in reverse.
5. Tipping hazard—do not raise the dump trailer while moving; move forward slowly; raise the dump trailer slowly.
6. Carbon monoxide poison hazard—do not run the engine indoors.
7. Explosion hazard—shut off the engine and extinguish all flames before refueling.

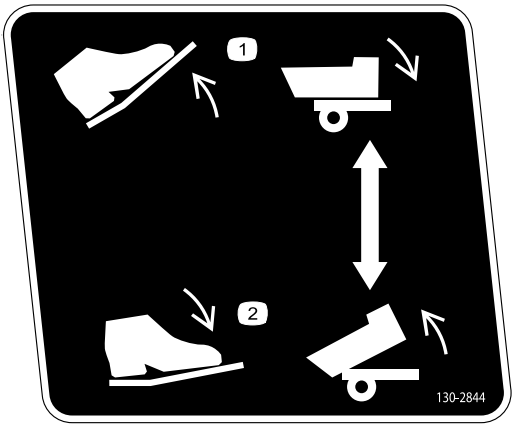

decal130-2844

130-2844

1. Raise the pedal to lower the hopper.
2. Lower the pedal to raise the hopper.

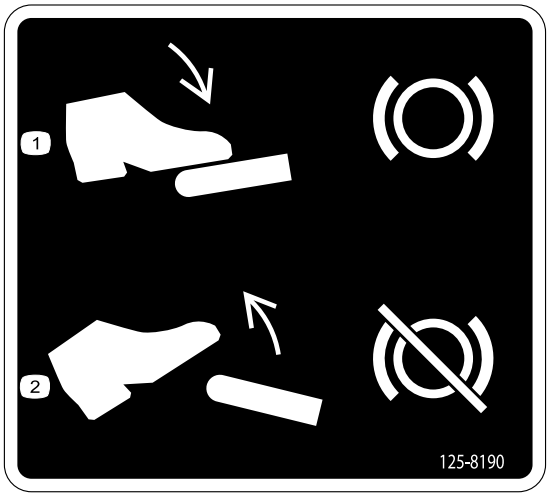

decal125-8190

125–8190

1. Press down on the pedal to apply the service brake
2. Release the pedal to release the service brake

decal125-4963

125–4963

1. Warning—keep hands away from hot surfaces

decal133-5619

133-5619

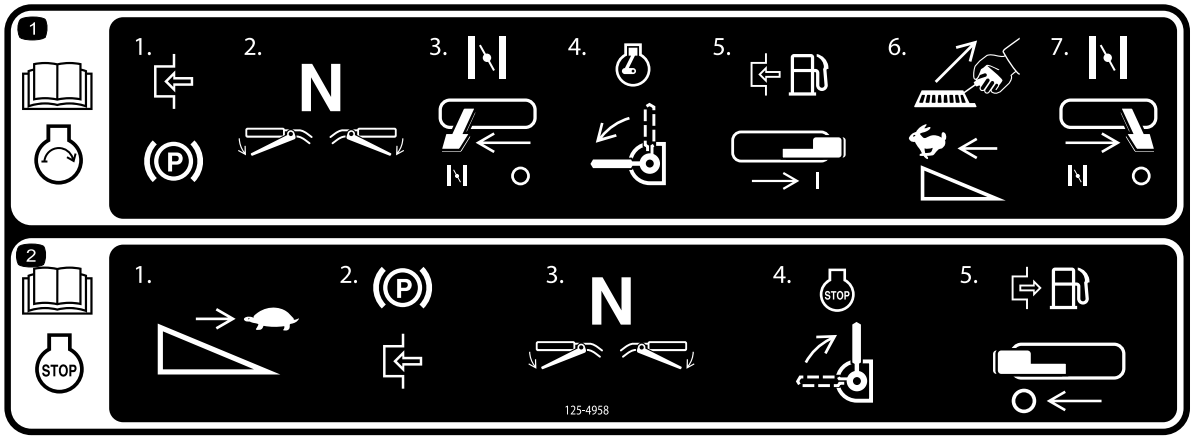

decal125-4958

125–4958

1. Read the *Operator's Manual* for information on starting the engine—1) Engage the parking brake; 2) Set the drive to neutral; 3) Open the choke; 4) Turn the engine switch on; 5) Engage the fuel switch; 6) Pull the recoil starter and set the throttle to fast; 7) Close the choke.
2. Read the *Operator's Manual* for information on shutting off the engine—1) Set the throttle to slow; 2) Engage the parking brake; 3) Set the drive to neutral; 4) Turn the engine switch to stop; 5) Disengage the fuel switch.

Product Overview

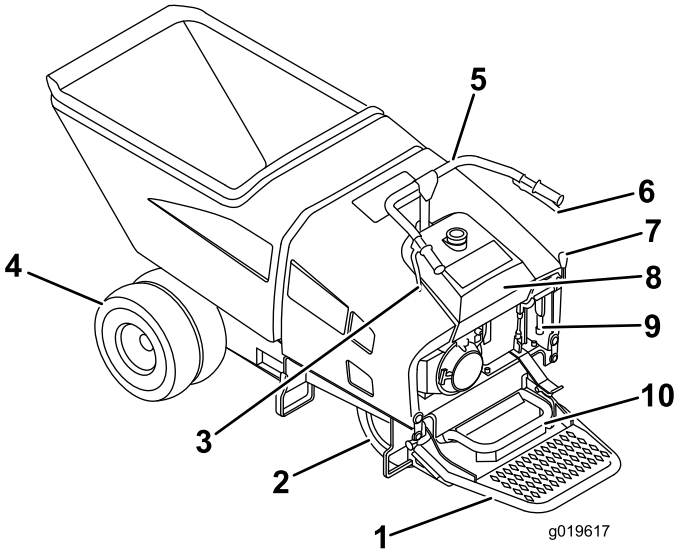

g019617

Figure 3

1. Operator platform
2. Steer tires
3. Reverse-speed-control lever
4. Drive tires
5. Handle bars
6. Forward-speed-control lever
7. Dump handle/pedal
8. Fuel tank
9. Parking brake
10. Brake pedal

Controls

Become familiar with all the controls (Figure 3) before you start the engine and operate the machine.

Brake Pedal

Apply the foot-operated brake pedal to stop the machine (Figure 3).

Forward-Speed-Control Lever

Squeeze the forward-speed-control lever (Figure 3) to move the machine forward. The more you squeeze the handle, the faster the machine will travel.

Reverse-Speed-Control Lever

Squeeze the reverse-speed-control lever (Figure 3) to reverse the movement of the machine. The more you squeeze the handle, the faster the machine will travel.

Dump Handle/Pedal

Pull the dump handle backward and/or press on the front of the pedal to dump the hopper (Figure 3). Push the dump handle forward and/or press on the rear of the pedal to lower the hopper.

Parking Brake Lever

To engage the parking brake, pull up on the lever. (Figure 3).

To release the parking brake, press the button on the end of the brake handle and lower the lever.

Fuel Gauge

The fuel gauge is part of the fuel-tank cap, and the gauge indicates the amount of fuel in the fuel tank (Figure 3).

Fuel-Tank Shutoff Valve

The fuel-tank shutoff valve is located at the bottom of the fuel tank. The shutoff valve is used to control the flow of fuel from the tank when you are performing maintenance or storing the machine (Figure 4).

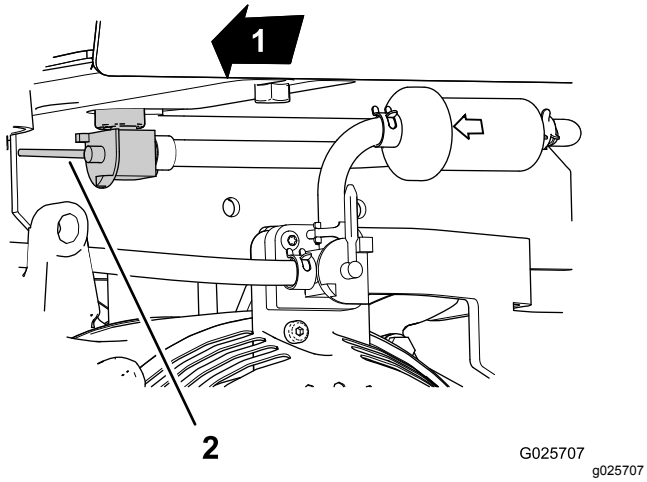

Figure 4

1. Forward
2. Shutoff-valve lever for the fuel tank (OFF position)

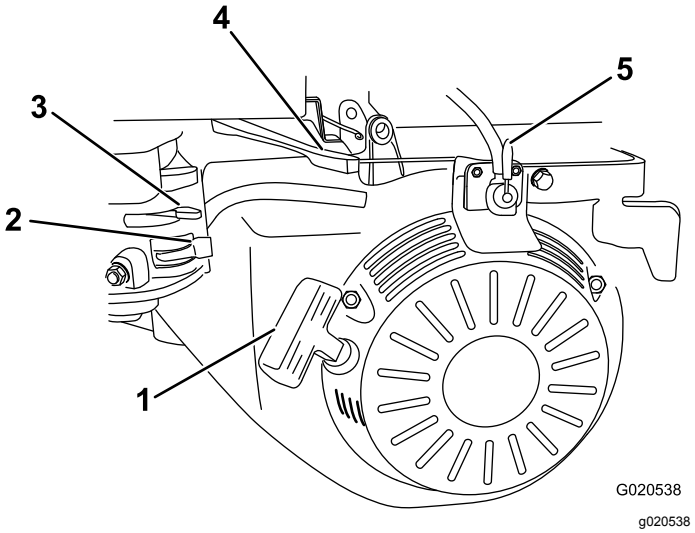

Figure 5

1. Recoil starter
2. Fuel shut-off valve
3. Choke lever
4. Throttle lever
5. On/Off switch

Engine Controls

Oil Alert System

The oil alert system is designed to prevent engine damage caused by an insufficient amount of oil in the crankcase. Before the oil level in the crankcase can fall below a safe limit, the oil alert system will automatically shut off the engine (the engine switch will remain in the ON position). If the engine stops and will not restart, check the engine-oil level before troubleshooting in other areas

Choke Lever

The choke lever (Figure 5) is required when starting a cold engine. Before pulling on the recoil start handle, move the choke lever to the CLOSED position. Once the engine is running, move the choke lever to the OPEN position. Do not use the choke if the engine is already warmed up or the air temperature is high.

Throttle Lever

The throttle lever (Figure 5) controls the speed (rpm) of the engine. It is located next to the choke lever. It sets the engine rpm and therefore can increase and decrease the speed of the machine. For best performance, set the throttle lever to the FAST position.

Fuel-Shutoff Valve

The fuel-shutoff valve (Figure 5) controls the flow of fuel from the fuel tank to the carburetor. The valve is located underneath the choke lever. Move the shutoff valve to the On position before attempting to start the engine. Once you have finished using the machine and you have turned the engine off, move the fuel-shutoff valve to the Off position.

On/Off Switch

The On/Off switch (Figure 5) allows the engine to start and also stops the engine. This switch is located on the front of the engine. The On/Off switch is marked as follows:

- I (On)—the ignition system is on.
- O (Off)—the ignition system is off.

Note: To start the machine, you must first move this control to the ON position. When you want to shut off the engine, move this switch to the OFF position.

Recoil Starter Handle

To start the engine, pull on the recoil starter handle (Figure 5) quickly to turn the engine over. The engine controls described in Figure 5 must all be set correctly for the engine to start.

Specifications

Note: Specifications and design are subject to change without notice.

Width (single wheel)	86 cm (34 inches)
Width (double wheel)	117 cm (46 inches)
Length	268 cm (105.5 inches)
Height	114.3 cm (45 inches)
Weight	621 kg (1370 lb)
Hopper capacity	.45 m^3 (16 cu.ft.)
Maximum load	1136 kg (2500 lb)
Maximum load (single wheel)	850 kg (1875 lb)
Wheelbase	107 cm (42 inches)
Discharge Height	16.5 cm (6.5 inches)

Operation

Note: Determine the left and right sides of the machine from the normal operating position.

Important: **Before operating, check the fuel and oil level, and remove debris from the machine. Also, ensure that the area is clear of people and debris. You should also know and have marked the locations of all utility lines.**

Adding Fuel

- For best results, use only clean, fresh (less than 30 days old), unleaded gasoline with an octane rating of 87 or higher ((R+M)/2 rating method).
- **ETHANOL:** Gasoline with up to 10% ethanol (gasohol) or 15% MTBE (methyl tertiary butyl ether) by volume is acceptable. Ethanol and MTBE are not the same. Gasoline with 15% ethanol (E15) by volume is not approved for use. Never use gasoline that contains more than 10% ethanol by volume, such as E15 (contains 15% ethanol), E20 (contains 20% ethanol), or E85 (contains up to 85% ethanol). Using unapproved gasoline may cause performance problems and/or engine damage which may not be covered under warranty.
- **Do not** use gasoline containing methanol.
- **Do not** store fuel either in the fuel tank or fuel containers over the winter unless you use a fuel stabilizer.
- **Do not** add oil to gasoline.

⚠ DANGER

In certain conditions, fuel is extremely flammable and highly explosive. A fire or explosion from fuel can burn you and others and can damage property.

- **Fill the fuel tank outdoors, in an open area, when the engine is cold. Wipe up any fuel that spills.**
- **Never fill the fuel tank inside an enclosed trailer.**
- **Do not fill the fuel tank completely full. Add fuel to the fuel tank until the level is 6 to 13 mm (1/4 to 1/2 inch) below the bottom of the filler neck. This empty space in the tank allows fuel to expand.**
- **Never smoke when handling fuel, and stay away from an open flame or where fuel fumes may be ignited by a spark.**
- **Store fuel in an approved container and keep it out of the reach of children. Do not use fuel that has been stored for more than 30 days.**
- **Do not operate without the entire exhaust system in place and in proper working condition.**

⚠ DANGER

In certain conditions during fueling, static electricity can be released causing a spark which can ignite the fuel vapors. A fire or explosion from fuel can burn you and others and can damage property.

- **Always place fuel containers on the ground away from your vehicle before filling.**
- **Do not fill fuel containers inside a vehicle or on a truck or trailer bed because interior carpets or plastic truck bed liners may insulate the container and slow the loss of any static charge.**
- **When practical, remove fuel-powered equipment from the truck or trailer and refuel the equipment with its wheels on the ground.**
- **If this is not possible, then refuel such equipment on a truck or trailer from a portable container, rather than from a fuel dispenser nozzle.**
- **If a fuel dispenser nozzle must be used, keep the nozzle in contact with the rim of the fuel tank or container opening at all times until fueling is complete.**

⚠ WARNING

fuel is harmful or fatal if swallowed. Long-term exposure to vapors can cause serious injury and illness.

- **Avoid prolonged breathing of vapors.**
- **Keep face away from nozzle and fuel tank or conditioner opening.**
- **Keep fuel away from eyes and skin.**

Using Stabilizer/Conditioner

Use Toro fuel stabilizer/conditioner in the machine to provide the following benefits:

- Keeps fuel fresh during storage of 90 days or less. Drain the fuel tank for periods of longer storage.
- Eliminates gum-like varnish buildup in the fuel system, which causes hard starting

Important: **Do not use fuel additives containing methanol or ethanol.**

Add the correct amount of fuel stabilizer/conditioner to the fuel.

Note: A fuel stabilizer/conditioner is most effective when mixed with fresh fuel. To minimize the chance of

varnish deposits in the fuel system, use fuel stabilizer at all times.

Filling the Fuel Tank

Fuel tank capacity: 21.6 L (5.7 US gal).

1. Park the machine on a level surface and shut off the engine. Allow the engine to cool.
2. Clean around the fuel tank cap and remove it.
3. Add fuel to the fuel tank until the level is just below the bottom of the filler neck.

   Important: **This space in the tank allows fuel to expand. Do not fill the fuel tank completely full.**
4. Install the fuel tank cap securely, turning it until it clicks.
5. Wipe up any fuel that may have spilled.

Checking the Machine-Fluid Levels

- Check the engine-oil level; refer to Checking the Engine-Oil Level (page 22)
- Check the hydraulic-fluid level; refer to Checking the Hydraulic-Fluid Level (page 30).

Starting the Engine

Note: For illustrations and descriptions of the engine controls referenced in this section, refer to Controls (page 10).

Note: Make sure the spark plug wire is installed on spark plug.

1. Set the parking brake to the ON position; refer to Parking Brake Lever (page 10).
2. Make sure the forward/reverse speed levers are in the neutral (released) position; refer to Forward-Speed-Control Lever (page 10) and Reverse-Speed-Control Lever (page 10).
3. Turn the fuel tank shutoff valve to the ON position; refer to Fuel-Tank Shutoff Valve (page 10).
4. Move the fuel-shutoff valve on the engine to the ON position; refer to Fuel-Shutoff Valve (page 12).
5. Move the choke lever to the ON position when starting a cold engine; refer to Choke Lever (page 11).

   Note: The choke may not be required when starting a warm engine.
6. Move the throttle lever away from the MIN position, about 1/3 of the way toward the MAX position; refer to Throttle Lever (page 11).
7. Turn the engine On/Off switch to the ON position; refer to On/Off Switch (page 12).
8. Pull the recoil starter handle out until positive engagement results, then pull it vigorously to start the engine (Recoil Starter Handle (page 12)).

   Important: **Do not pull the recoil rope to its limit or let go of the starter handle when the rope is pulled out; the rope may break or the recoil assembly may be damaged.**
9. When the engine has started and warms up, push the choke lever to the OFF position.
10. Move the throttle lever to the desired setting.

Shutting Off the Engine

1. Move the throttle lever to the MIN position; refer to Throttle Lever (page 11).
2. Engage the parking brake; refer to Parking Brake Lever (page 10).
3. Ensure that the forward/reverse speed levers are in the NEUTRAL position; refer to Forward-Speed-Control Lever (page 10) and Reverse-Speed-Control Lever (page 10).
4. Turn the engine On/Off switch to the OFF position; refer to On/Off Switch (page 12).
5. When the engine stops running, turn the fuel-shutoff valve on the engine to the OFF position; refer to Fuel-Shutoff Valve (page 12).

Operating the Machine

⚠ DANGER

Always face forward, toward the handle bar and controls when operating the machine. Operating the controls in any other manner may result in serious injury or death.

1. Always use the “3-point” contact when you mount the machine. “3-point contact” refers to 3 out of 4 arms/legs being in contact with the machine when you mount or dismount the machine. Always face the machine when you mount or dismount it.
2. Start the engine; refer to Starting the Engine (page 14).
3. Adjust the throttle lever to the desired engine rpm; refer to Throttle Lever (page 11).

4. Release the parking brake lever; refer to Parking Brake Lever (page 10).
5. To move the machine forward, squeeze the speed-control-lever on the right handle bar. To move the machine rearward, squeeze the speed-control lever on the left handle bar; refer to Forward-Speed-Control Lever (page 10) and Reverse-Speed-Control Lever (page 10).

   Note: The more you squeeze the handle, the faster the machine travels.
6. When you release the speed control handle, the machine stops.

   Note: If the machine does not stop when the speed control is released, have the machine inspected by an Authorized Service Dealer.
7. Use your foot to press the brake pedal; refer to Brake Pedal (page 10).
8. Engage the parking brake lever by pulling up on the parking brake lever; refer to Parking Brake Lever (page 10).
9. Shut off the engine; refer to Shutting Off the Engine (page 14).

Operating the Hopper

Know the load capacities of your machine and never exceed them. The machine is normally operated on uneven, unpaved, bumpy, and/or inclined surfaces. Adjust your load accordingly.

1. Position the machine in the area where you intend to dump the load.
2. Dump the hopper by pushing forward the dump handle or pressing down on the forward part of the dump pedal (Figure 6).

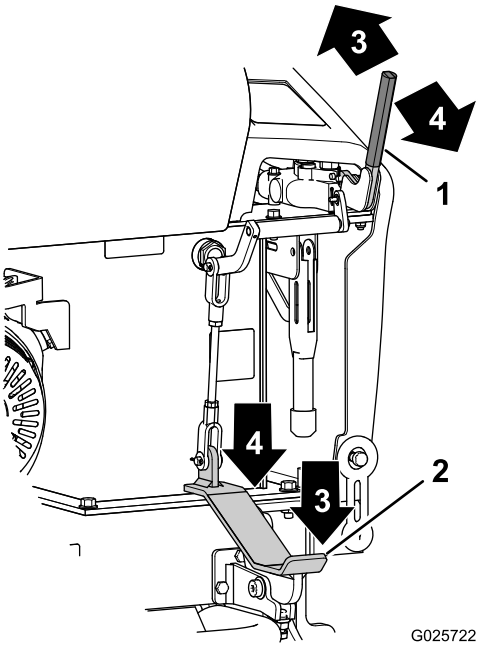

g025722

Figure 6

1. Dump handle
2. Dump pedal
3. Hopper dump position
4. Hopper upright position

3. Move the hopper to the upright position by pulling back the dump handle or pressing down on the rear part of the dump pedal (Figure 6).

Parking the Machine

Parking on a Grade

Parking the machine on a grade should be avoided if possible. If the machine must be parked on a grade, park it at a right angle to the slope, engage the parking brake and block the wheels, if necessary.

Parking the Machine for a Long Period of Time

1. Park the machine out of main traffic areas and engage the parking brake.
2. When the machine will be out of use for a long period of time, tilt the hopper up so water, snow, and debris will not collect inside.
3. Cover the dump cylinder shaft to prevent corrosion.

Moving the Machine without Engine Power

The machine can be moved a short distance if the engine does not run. The transmission features a bypass valve (Figure 7).

- Rotate the bypass valve counterclockwise to tow the machine.
- Rotate the bypass valve clockwise to operate the machine normally.

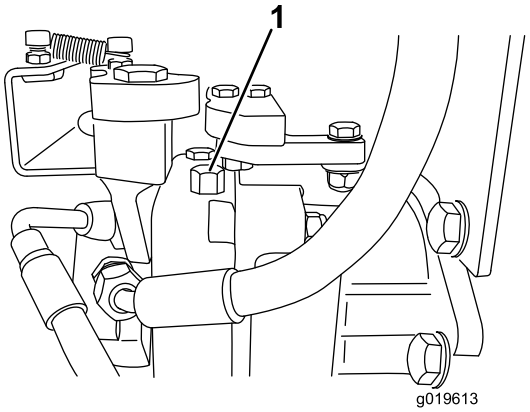

g019613

Figure 7

1. Bypass valve

Transporting the Machine

When transporting the machine on a trailer, always use the following procedure:

Important: **Do not operate or drive the machine on roadways.**

1. Shut off the engine and engage the parking brake.
2. When transporting the machine, observe overall height for proper clearance of obstacles overhead.
3. Ensure that the hopper is lowered and latched down.
4. Secure the machine with the proper devices at the tie-down loop.

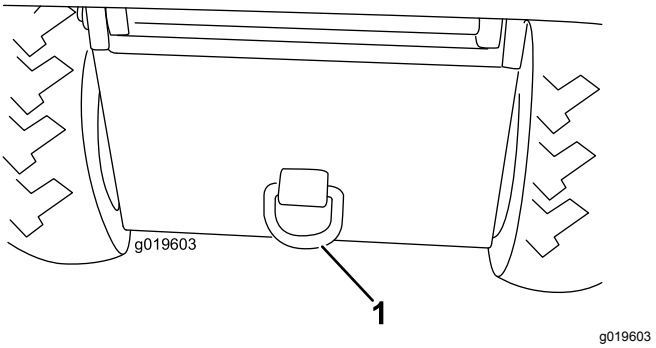

Figure 8

1. Tie-down loop

Lifting the Machine

Hoist the machine using 3 lift points under the hopper. Tilt the hopper forward to locate the 3 lift loops and attach a chain or straps at each of the loops as shown in Figure 9.

Note: Take up the slack in the chain or straps to properly balance the unit.

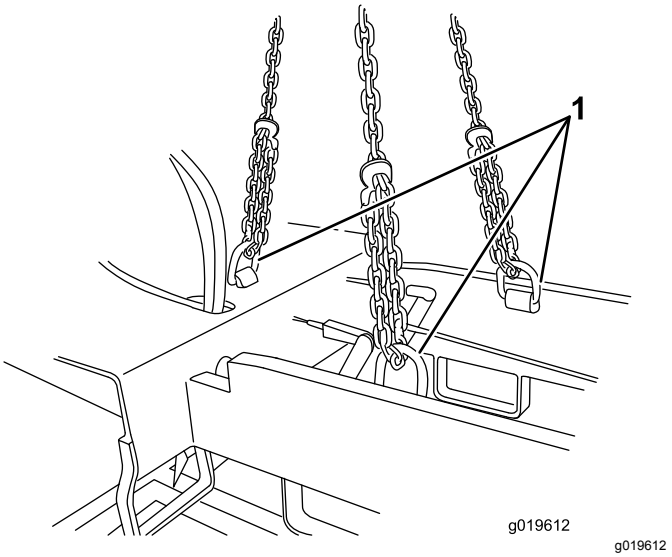

Figure 9

1. Lift points (3)

Lift the machine with a fork lift from the side or from the front (Figure 10 and Figure 11). Pull out on the platform release ring (Figure 12) and raise the standing platform to allow access to the fork pockets.

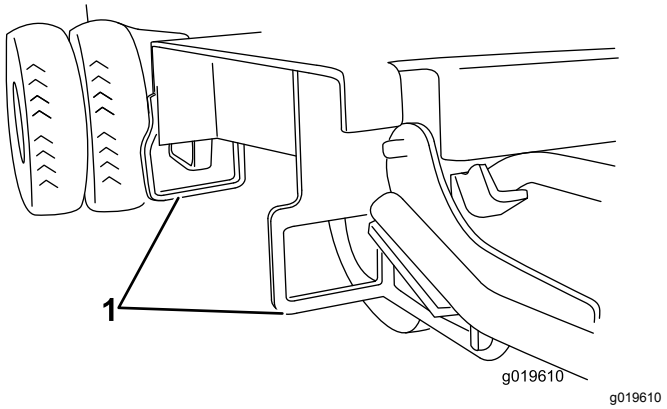

Figure 10

1. Rear fork pockets

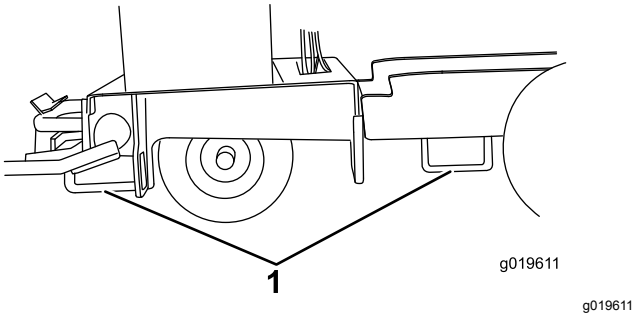

Figure 11

1. Side fork pockets

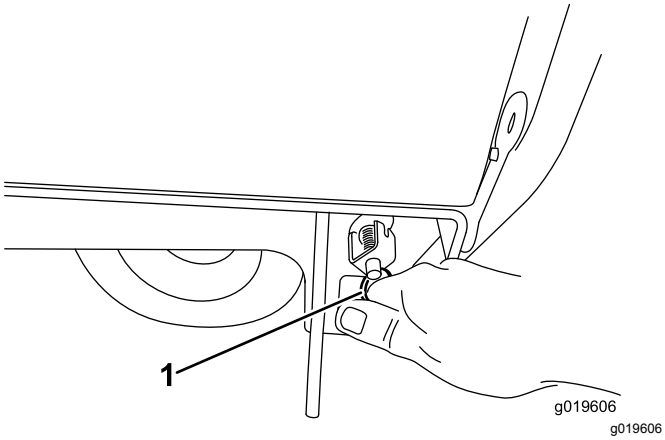

Figure 12

1. Platform release ring

Using the Quick-Release Tire Hubs

The quick-release tire system allows quick removal of the outer machine tires. The quick-release system allows the machine to be converted from a 117 cm (46 inch) to a 91 cm (36 inch) wide machine without any special tools for hub removal.

1. Position the inner wheel of the machine over a 2x4 and engage the parking brake.
2. Remove the large tee bolt in the center of the wheel with a crow bar (Figure 13).

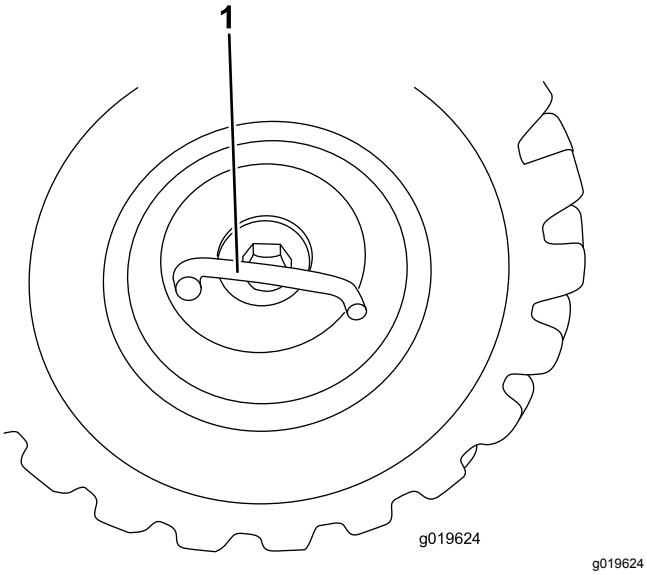

Figure 13

1. Tee bolt

3. Remove the outside wheel with quick-change hub attached.
4. Repeat the above steps on opposite side of the machine.

⚠ WARNING

The maximum payload is reduced to 850 kg (1875 lb) when operating the machine without the dual wheels.

Maintenance

Note: Determine the left and right sides of the machine from the normal operating position.

Recommended Maintenance Schedule(s)

Maintenance Service Interval	Maintenance Procedure
After the first 50 hours	• Change the engine oil.
Before each use or daily	• Check the engine oil level. • Check service brake operation. • Check parking brake operation. • Check the hydraulic fluid level. • Remove debris from the machine. • Check for loose fasteners.
Every 40 hours	• Check the condition of the tires. • Check the lug nuts. • Check the hydraulic lines for leaks, loose fittings, kinked lines, loose mounting supports, wear, and deterioration.
Every 50 hours	• Grease and oil the machine. • Clean the air cleaner.
Every 100 hours	• Change the engine oil. • Check/adjust the spark plug. • Clean the sediment cup. • Replace the hydraulic filter.
Every 200 hours	• Change the hydraulic fluid.
Every 300 hours	• Replace the paper element. • Replace the spark plug. • Change the fuel filter.
Every 1,000 hours	• Drain and flush the fuel tank.
Every 1,500 hours	• Replace all moving hydraulic hoses.
Yearly	• Pack wheel bearings.
Yearly or before storage	• Touch up chipped paint

Important: **Refer to your engine owner's manual for additional maintenance procedures.**

Pre-Maintenance Procedures

Removing the Cowl

Note: You must dump the hopper before you remove the cowl. You can do this using either the hydraulics or by removing the pin in the hydraulic cylinder and the hopper base.

1. Before removing the cowl (Figure 14), shut off the engine and allow the engine to cool.

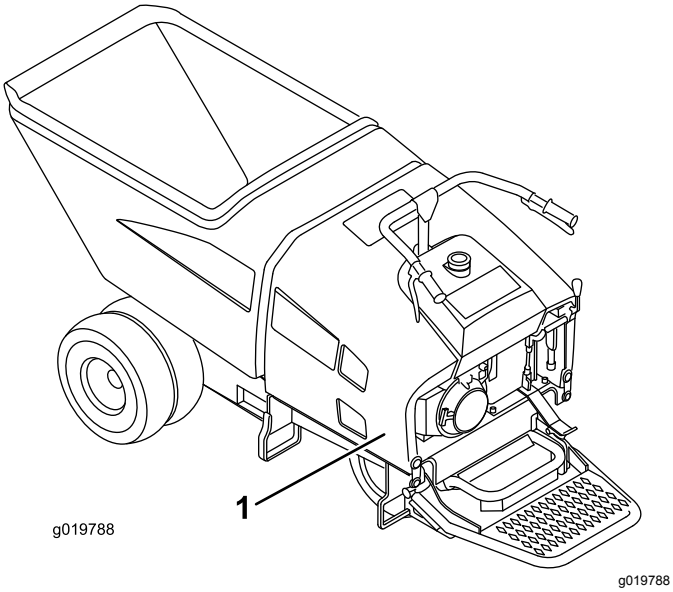

Figure 14

1. Cowl

2. Unhook the cowl latches (Figure 15) and remove the cowl.

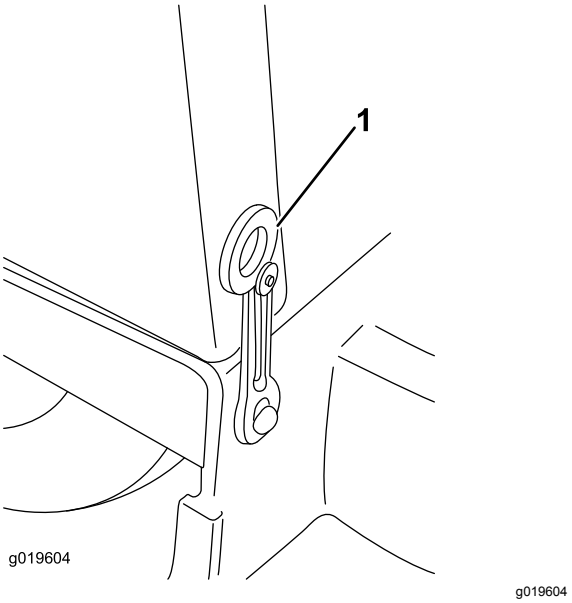

Figure 15

1. Cowl latch

3. Install the cowl and secure the latches upon completion of the task.

Lubrication

Greasing the Machine

Service Interval: Every 50 hours—Grease and oil the machine.

Yearly—Pack wheel bearings.

If you operate the machine under normal conditions, lubricate all grease fittings for the bearings and bushings after every 50 hours of operation with No. 2 lithium grease. Lubricate bearings and bushings immediately after every washing, regardless of the interval listed. Also, apply a light coating of oil onto the control cables.

The grease fitting locations and quantities are as follows:

Note: Remove the blue protection caps before greasing and replace when finished.

- Hopper pivot points (Quantity 2)—Figure 16

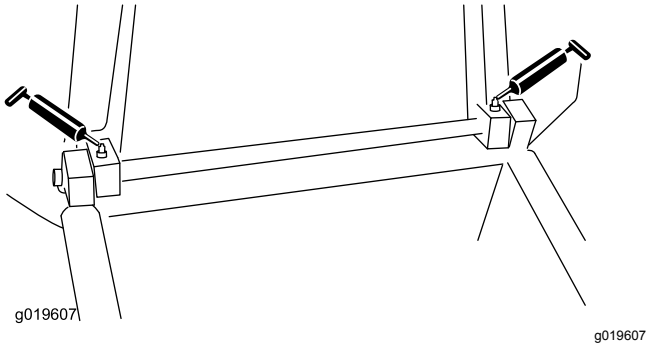

Figure 16

- Cylinder pivots (Quantity 2)—Figure 17

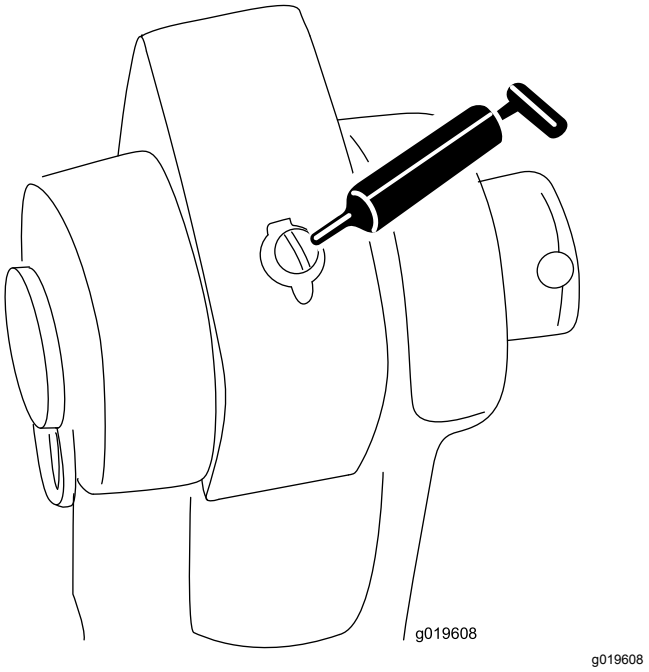

Figure 17

Engine Maintenance

Checking the Engine-Oil Level

Service Interval: Before each use or daily

Oil type: API classification SJ or later.

Oil viscosity: selected the oil viscosity according to ambient temperature in the table below.

Oil Viscosity Table

Over 13°C. (40°F)	SAE 30 or 10W30
Below 13°C. (40°F)	SAE 20 or 10W30

Note: The best time to check the engine oil is when the engine is cool before it has been started for the day. If it has already been run, allow the oil to drain back down to the sump for at least 10 minutes before checking.

1. Park the machine on a level surface and shut off the engine. Allow the engine to cool.
2. Unlatch and remove the cowl.
3. Clean around the oil filler cap/dipstick (Figure 18).

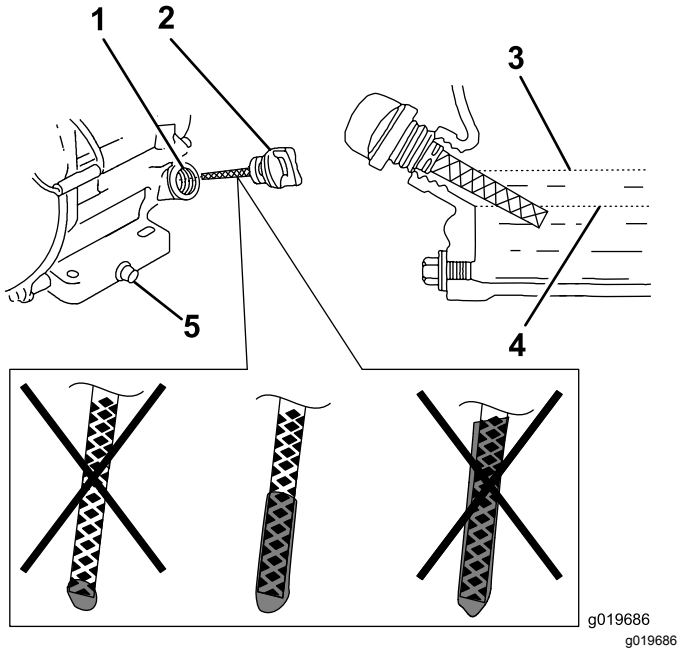

Figure 18

1. Filler tube
2. Dipstick
3. Upper limit
4. Lower limit
5. Oil drain bolt

4. Remove the oil filler cap/dipstick by rotating it counterclockwise (Figure 18).
5. Wipe the oil filler cap/dipstick clean and insert it into filler port.

   Note: Do not screw into port.

   Important: **Do not overfill the crankcase with oil because the engine may be damaged.**
6. Remove and check level of oil.

   Note: If oil level is near or below the lower limit mark on the dipstick, add only enough of the specified oil to raise level to the upper limit mark (bottom edge of the oil fill hole); refer to Figure 18.
7. Check level of oil (Figure 18).
8. Install the oil filler cap/dipstick and wipe up any spilled oil (Figure 18).
9. Install the cowl and secure the latches.

Servicing the Air Cleaner

Service Interval: Every 50 hours—Clean the air cleaner.

Every 300 hours—Replace the paper element.

1. Disconnect the spark-plug wire.
2. Remove the wing nut that secures the air-cleaner cover to the air cleaner and remove the cover. Clean the cover thoroughly (Figure 19).
3. Remove the wing nut from the air filter and remove the filter (Figure 19).

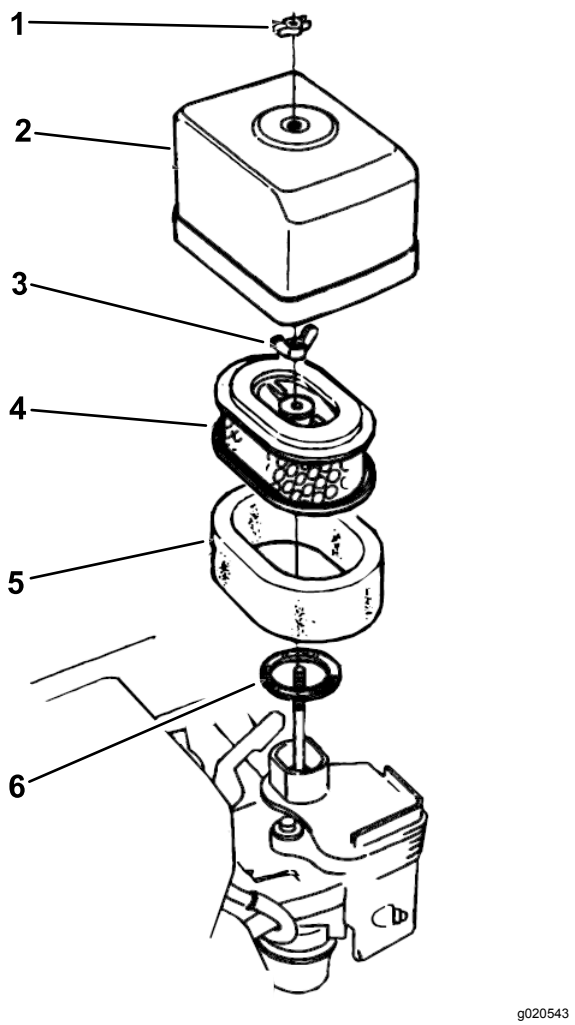

Figure 19

1. Wing nut
2. Air-cleaner cover
3. Wing nut
4. Paper element
5. Foam element
6. Gasket

4. Remove the foam filter from the paper filter (Figure 19).
5. Inspect both air-filter elements and replace them if they are damaged.

   Note: Always replace the paper air-filter element at the scheduled interval.
6. Clean the foam element as follows:
   A. Wash the foam element in a solution of liquid soap and warm water.

      Note: Squeeze to remove dirt, but do not twist the element because the foam may tear.

   B. Dry the element by wrapping in a clean rag. Squeeze the rag and foam element to dry, but do not twist the element because the foam may tear.

   C. Saturate the element with clean engine oil. Squeeze element to remove excess oil and to distribute oil thoroughly.
7. Cleaning the paper element: Tap the filter element several times on a hard surface to remove dirt or blow compressed air (not exceeding 2.07 bar (30 psi) through the filter element from the inside. Never try to brush off dirt; brushing will force dirt into the fibers.
8. Install the foam element, paper element, and air-cleaner cover.

   Important: **Do not operate the engine without the air-cleaner element. Operating without an element causes damage to the engine.**

Changing the Engine Oil

Service Interval: After the first 50 hours—Change the engine oil.

Every 100 hours—Change the engine oil.

Crankcase capacity: 1.1 L (1.16 US qt).

Oil type: API classification SJ or later.

Oil viscosity: selected the oil viscosity according to ambient temperature in the table below.

Oil Viscosity Table

Over 13° C (40° F)	SAE 30 or 10W30
Below 13° C (40° F)	SAE 20 or 10W30

1. Start and run the engine for a few minutes to warm the engine oil; then, shut off the engine.
2. Have a funnel ready to place under the oil drain plug, then remove the plug and place the funnel under the plug to guide the oil into a container (Figure 20).
3. Install the drain plug and wipe away excess oil from the machine.
4. Fill the crankcase with the specified oil; refer to Figure 18 in Checking the Engine-Oil Level (page 22).
5. Dispose of the oil properly. Recycle the used oil according to local codes.

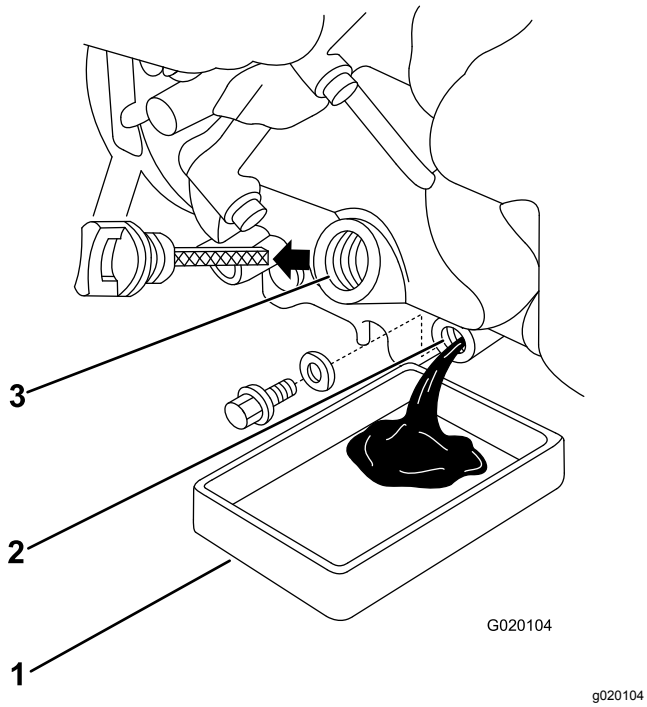

Figure 20

1. Oil pan
2. Oil-drain hole
3. Oil-fill cap

Replacing the Spark Plug

Service Interval: Every 100 hours—Check/adjust the spark plug.

Every 300 hours—Replace the spark plug.

Spark plug type: NGK BPR 6ES spark plug or equivalent.

Air gap: 0.70-0.80 mm (0.028-0.031 inch).

1. Remove the spark-plug wire.
2. Clean around spark plug and remove plug from cylinder head.

   Important: **Replace a cracked, fouled, or dirty spark plug. Do not sand blast, scrape, or clean electrodes because engine damaged could result from grit entering the cylinder.**

3. Set the air gap at 0.70 to 0.80 mm (0.028 to 0.031 inch) (Figure 21). Install the spark plug carefully by hand to avoid cross-threading.

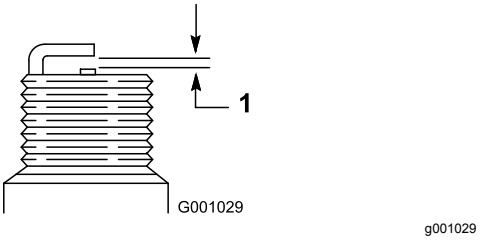

Figure 21

1. 0.70 to 0.80 mm (0.028 to 0.031 inch)

4. After the spark plug is seated, tighten it with a spark plug wrench to compress the sealing washer.
5. When installing a new spark plug, tighten 1/2 turn after the spark plug seats to compress the washer.
6. When installing the original spark plug, tighten 1/8 to 1/4 turn after the spark plug seats to compress the washer.

   Note: A loose spark plug can overheat and damage the engine. Overtightening the spark plug can damage the threads in the cylinder head.

7. Connect the spark-plug wire.

Fuel System Maintenance

Cleaning the Sediment Cup

Service Interval: Every 100 hours—Clean the sediment cup.

⚠ DANGER

In certain conditions, fuel is extremely flammable and highly explosive. A fire or explosion from fuel can burn you and others and can damage property.

- **Fill the fuel tank outdoors, in an open area, when the engine is cold. Wipe up any fuel that spills.**
- **Do not fill the fuel tank completely full. Add fuel to the fuel tank until the level is 25 mm (1 inch) below the bottom of the filler neck. This empty space in the tank allows fuel to expand.**
- **Never smoke when handling fuel, and stay away from an open flame or where fuel fumes may be ignited by a spark.**
- **Store fuel in an approved container and keep it out of the reach of children. Do not use fuel that has been stored for more than 30 days.**
- **Always place fuel containers on the ground away from your vehicle before filling.**
- **Do not fill fuel containers inside a vehicle or on a truck or trailer bed because interior carpets or plastic truck bed liners may insulate the container and slow the loss of any static charge.**
- **When practical, remove fuel-powered equipment from the truck or trailer and refuel the equipment with its wheels on the ground.**
- **If this is not possible, then refuel such equipment on a truck or trailer from a portable container rather than from a fuel dispenser nozzle.**
- **If you must use a fuel-dispenser nozzle, keep the nozzle in contact with the rim of the fuel tank or container opening at all times until fueling is complete.**

1. Move the fuel valve to the OFF position, then remove the fuel sediment cup and O-ring (Figure 22).

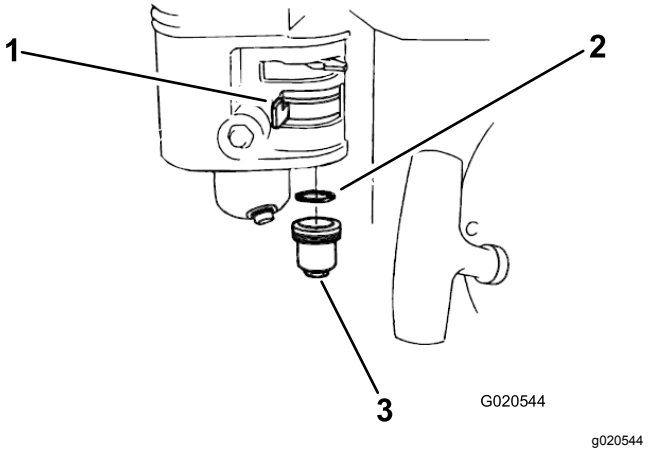

Figure 22

1. Fuel valve
2. O-ring
3. Fuel sediment bowl

2. Wash the sediment cup and O-ring in nonflammable solvent, and dry them thoroughly.
3. Place the O-ring in the fuel valve, and install the sediment cup (Figure 22).
4. Tighten the sediment cup securely.

Changing the Fuel Filter

Service Interval: Every 300 hours/Yearly (whichever comes first)

1. Shut off the engine and engage the parking brake. **Allow the engine to cool.**
2. Rotate the lever for the tank-shutoff valve forward and up to the OFF position (Figure 23).

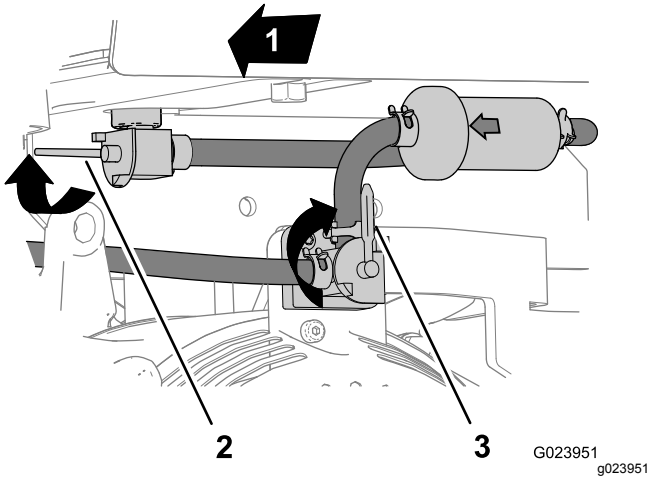

Figure 23

1. Forward
2. Lever—tank-shutoff-valve (Off position)
3. Lever—engine switch (Stop position)

3. Start the engine and run the machine until the engine shuts off.
4. Rotate the lever for the engine switch clockwise to the STOP position, and allow the engine to cool (Figure 23).
5. Remove the spark-plug wire (Figure 24).

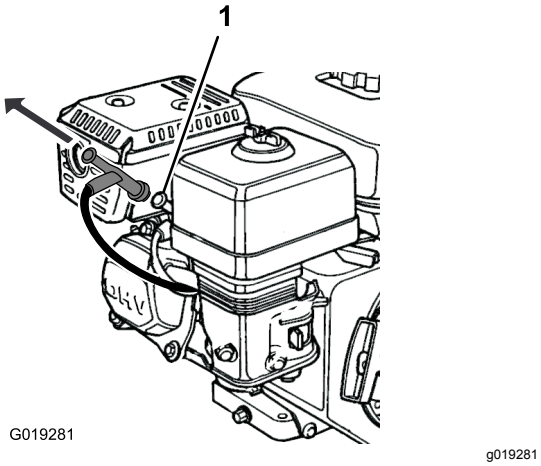

Figure 24

1. Spark-plug wire

6. Remove the hose clamps and hose from the barbed fitting at fuel filter (Figure 25).

Note: Drain the fuel from the old fuel filter dispose of the fuel and filter at an authorized disposal site.

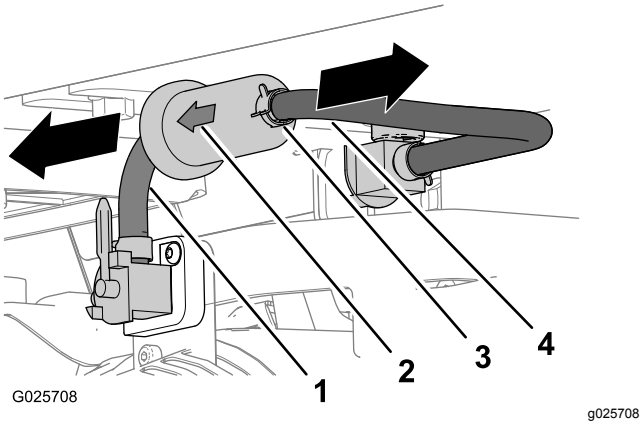

Figure 25

1. Hose (engine switch)
2. Fuel-filter arrow
3. Hose clamp
4. Hose (tank-shutoff valve)

7. Align the arrow on the case of the new fuel filter to correspond with the fuel flow to the engine (Figure 25).

   Note: Ensure that the hose clamps are slipped over the hoses attached to the engine fuel-shutoff valve and the tank-shutoff valve.

8. Insert the barbed fitting of the fuel filter into the hose from the engine switch (Figure 25).
9. Insert the barbed fitting at the other end of the fuel filter into the hose attached to the tank-shutoff valve (Figure 25).
10. Align the clamps over the hoses at the barbed area of the filter, and secure the clamps to the hoses.
11. Connect the spark-plug wire (Figure 24).
12. Open the tank-shutoff valve and turn on the engine switch, and check for fuel leaks (Figure 23).

Draining the Fuel Tank

Service Interval: Every 1,000 hours/Yearly (whichever comes first)—Drain and flush the fuel tank.

⚠ DANGER

In certain conditions, fuel is extremely flammable and highly explosive. A fire or explosion from fuel can burn you and others and can damage property.

- **Drain fuel from the fuel tank when the engine is cold. Do this outdoors in an open area. Wipe up any fuel that spills.**
- **Never smoke when draining fuel, and stay away from an open flame or where a spark may ignite the fuel fumes.**

1. Shut off the engine and engage the parking brake. Allow the engine to cool.
2. Move the tank fuel-shutoff valve to the OFF position.
3. Remove the fuel sediment cup (Figure 22) and empty the fuel from it.
4. Move the tank fuel-shutoff valve (Figure 22) to the ON position, and drain the fuel from the fuel tank into a suitable container.
5. Replace the sediment cup and tighten securely (Figure 22).
6. Loosen the drain screw to drain fuel from the carburetor into a suitable container.
7. Install the drain screw when the carburetor is drained.

Drive System Maintenance

Adjusting the Transmission Return to Neutral Position

The hydrostatic transmission is equipped with a self-centering device that adjusts the transmission to the Neutral position, stopping the machine. If the machine creeps in one direction or the other when you release the controls, adjust the transmission. To adjust the transmission, use the following procedure:

1. Shut off the engine.
2. Remove the throttle lever cables at the transmission.
3. Lift the front wheels off the ground, and support the machine with a jack stand.
4. Start the machine. Increase the engine throttle to full speed while checking for front drive wheel rotation.

   Note: If the wheels rotate, proceed to the next step. If the wheels do not rotate, shut off the engine and install the control cables.
5. Note the directional movement of the front drive wheels. **Shut off the engine**.
6. Loosen the lock down screw (Figure 26) until the return arm can be rotated.

   Note: If wheels rotate forward, rotate the return arm counterclockwise. If wheels rotate backward, rotate the return arm clockwise.

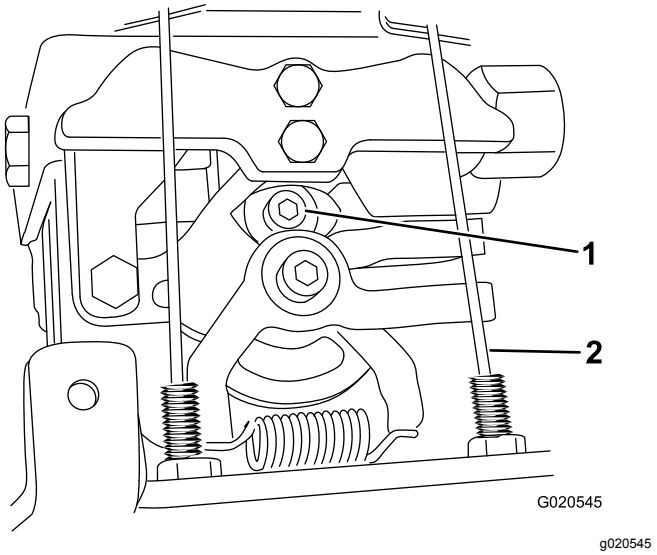

Figure 26

1. Lock down screw
2. Return arm

7. Tighten the lock down screw and repeat step 4.

Checking the Tires and Lug Nuts

Service Interval: Every 40 hours—Check the condition of the tires.

Every 40 hours—Check the lug nuts.

- Inspect tires for cuts, slashes, or bulges. Tires with defects need to be replaced or repaired for proper handling and safety.
- Check weekly to make sure all lug nuts are tight. Torque the lug nuts to 122 N·m (90 ft-lb). This is important on new machines or newly replaced wheels.

Controls System Maintenance

Brake Maintenance

⚠ WARNING

If the brakes are not properly adjusted, serious injury or death may occur.

Check your brakes daily. If you encounter any problems with the brakes while operating the machine, shut off the machine immediately and take it to an Authorized Service Dealer for repair.

Checking the Service Brake

Service Interval: Before each use or daily

1. Move the machine to a level, open area.
2. Pull the parking brake lever up to engage the brake and start the engine (Figure 27).

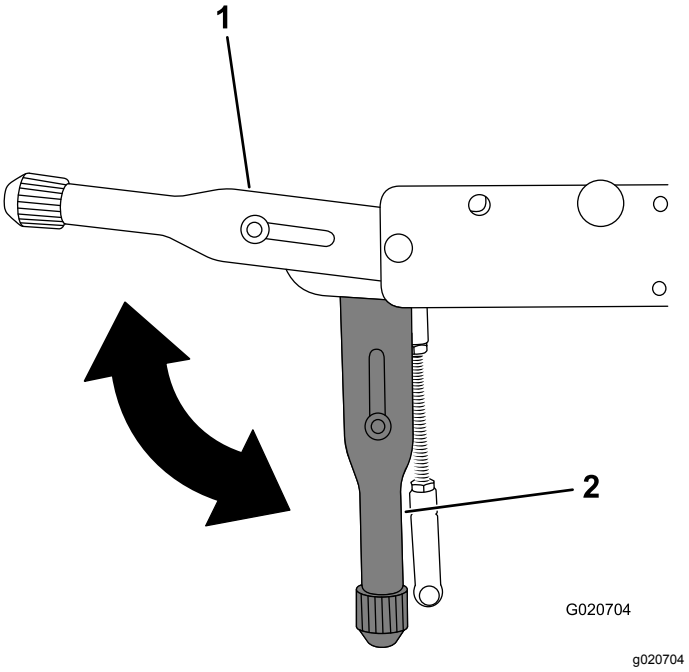

Figure 27

1. Engaged position
2. Disengaged position

3. Set the engine throttle to the FAST position.
4. Step on the service brake pedal (Figure 28).

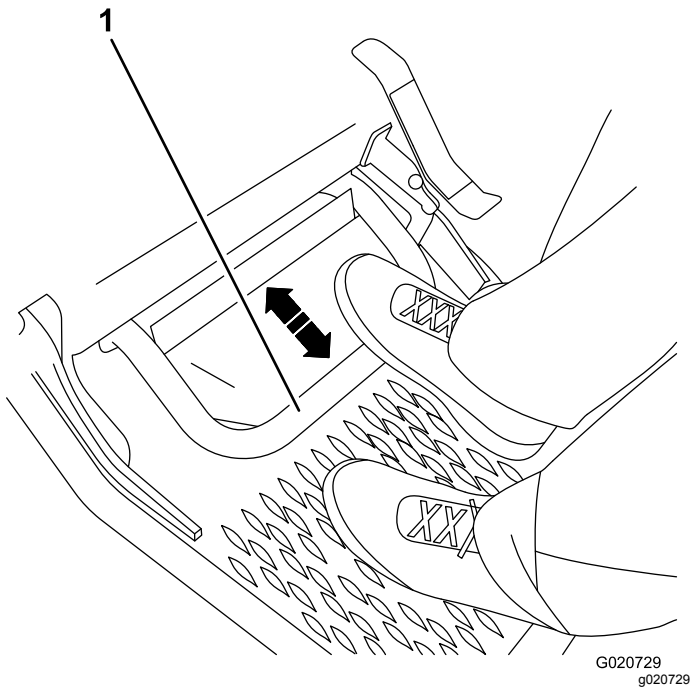

Figure 28

1. Brake pedal

5. Push the parking brake lever down to disengage the brake (Figure 27).
6. Slowly squeeze the forward speed-control lever.

   Note: The machine should not move forward. The engine should stall at full engagement of speed control.
7. Release the speed-control lever.
8. Slowly squeeze the reverse-speed-control lever.

   Note: The machine should not move backward. The engine should stall at full engagement of speed control.
9. Release the speed-control lever.
10. If the machine moves forward or backward, have the machine repaired at an Authorized Service Dealer.

Checking the Parking Brake

Service Interval: Before each use or daily

1. Park the machine on a level surface.

   Note: Ensure that there is nothing in front of the machine.
2. Engage the parking brake (Figure 27).
3. Start the engine and set the throttle to fast.
4. Grasp the forward-speed-control lever.

   Note: The engine should stall at full engagement of speed control and the machine should not move forward.

   Note: If the machine moves forward, refer to Adjusting the Parking Brake (page 30).
5. Release the forward-speed-control lever.
6. Release the parking brake (Figure 27).
7. Grasp the forward-speed-control lever.

   Note: The machine should move forward.

   Note: If the machine does not move forward, refer to Adjusting the Parking Brake (page 30).
8. Repeat steps 2 through 7 for the reverse-speed-control lever.
9. Step on the service brake, engage the parking brake, and shut off the engine.

Adjusting the Parking Brake

Turning the knob on the parking brake handle adjusts the parking brake.

- **Loosening the parking brake:**(Figure 29).
  1. Ensure that engine is off.
  2. Step on the service brake pedal (Figure 28).
  3. Disengage the parking brake (Figure 27).
  4. Rotate the parking-brake knob **counterclockwise** (Figure 29).

     Note: Rotate the knob no more than 1 revolution each time.

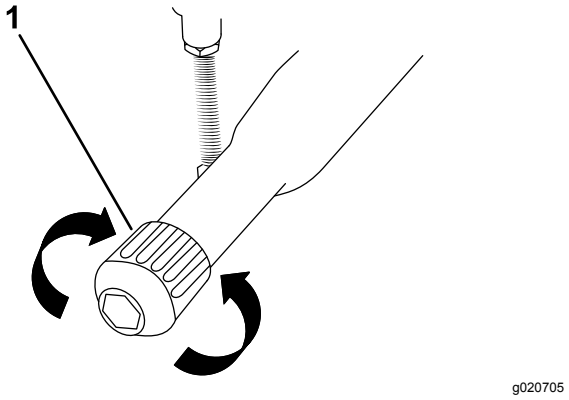

Figure 29

1. Parking-brake knob

---

  5. Test the parking brake; refer to Checking the Parking Brake (page 29).
  6. Repeat steps 1 through 5 until the machine moves forward.
- **Tightening the parking brake:** (Figure 29).
  1. Shut off the engine.
  2. Step on the service brake pedal (Figure 28).
  3. Disengage the parking brake (Figure 27).
  4. Rotate the parking-brake knob **clockwise** (Figure 29).

     Note: Rotate the knob no more than 1 revolution each time.
  5. Test the parking brake; refer to Checking the Parking Brake (page 29).
  6. Repeat steps 1 through 5 until the machine does not move forward.

Hydraulic System Maintenance

⚠ WARNING

Hydraulic fluid escaping under pressure can penetrate skin and cause injury. Fluid injected into the skin must be surgically removed within a few hours by a doctor familiar with this form of injury or gangrene may result.

- **Keep your body and hands away from pin hole leaks or nozzles that eject high-pressure hydraulic fluid.**
- **Use cardboard or paper to find hydraulic leaks, never use your hands.**

Checking the Hydraulic-Fluid Level

Service Interval: Before each use or daily

Hydraulic fluid type: Mobil 424 Hydraulic Oil or equivalent

The machine hydraulic tank is filled at the factory with approximately 28.4 L (30 US qt) of hydraulic fluid.

Important: **Always use the correct hydraulic fluid. Unspecified fluids will damage the hydraulic system.**

1. Park the machine on a level surface and shut off the engine. Allow the engine to cool.
2. Unlatch and remove the cowl.
3. Ensure that the hopper is down and in the level position.
4. Locate the fluid sight gauge (Figure 30) on the side of the hydraulic fluid tank.

   Note: When the fluid level is correct, the fluid level will cover 25% to 75% of the window in the sight gauge.

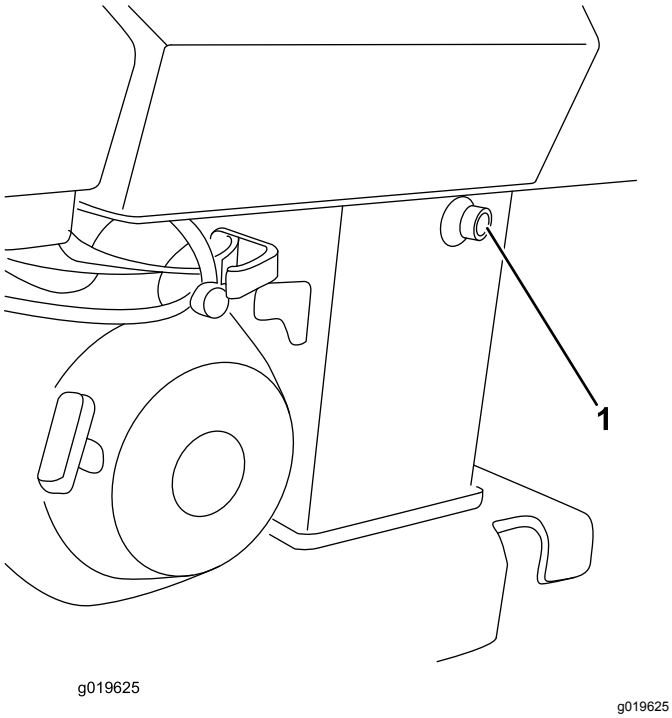

Figure 30

1. Sight gauge

5. If the fluid level is low, remove the breather/filler cap from the top of the hydraulic tank (Figure 31) and add enough of the specified hydraulic fluid to raise it to the proper level.

⚠ CAUTION

The hydraulic breather/filler cap is designed to pressurize the reservoir to 34 kPa (5 psi).

Loosen the cap slowly to avoid injury whenever adding fluid or working on the hydraulic system. Use a wrench on the hex directly under the cap.

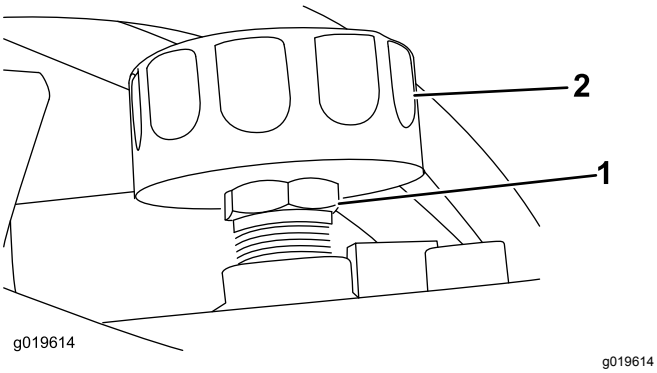

Figure 31

1. Breather/filler cap
2. Hex

6. Install the breather/filler cap. Wipe up any spilled hydraulic fluid (Figure 31).

Replacing the Hydraulic Filter

Service Interval: Every 100 hours—Replace the hydraulic filter.

Important: **Do not use an automotive oil filter or severe hydraulic system damage may result.**

1. Park the machine on a level surface, engage the parking brake. and shut off the engine.
2. Unlatch and remove the cowl.
3. Place a drain pan under the filter (Figure 32).

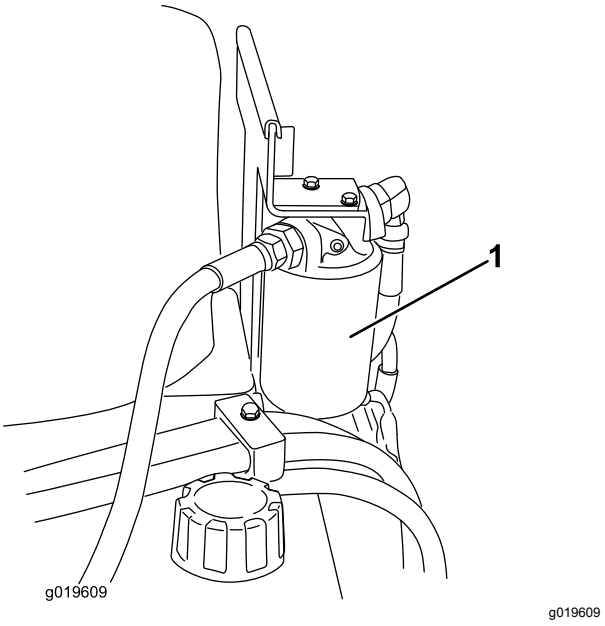

Figure 32

1. Hydraulic filter

4. Remove the old filter (Figure 32) and wipe the surface of the filter adapter gasket clean.
5. Apply a thin coat hydraulic fluid to the rubber gasket on the replacement filter.
6. Install the replacement hydraulic filter onto the filter adapter (Figure 32). Tighten it clockwise until the rubber gasket contacts the filter adapter, then tighten the filter an additional 3/4 turn.
7. Clean up any spilled fluid.
8. Start the engine and let it run for 2 minutes to purge air from the system.
9. Shut off the engine and check for leaks.
10. Check the fluid level in the hydraulic tank, refer to Checking the Hydraulic-Fluid Level (page 30).

    Note: Do not over fill the hydraulic tank.

11. Install the cowl and secure the latches.

Changing the Hydraulic Fluid

Service Interval: Every 200 hours

Hydraulic fluid type: Mobil 424 Hydraulic Oil or equivalent

Hydraulic fluid capacity: 28.4 L (30 US qt)

Note: For temperatures below 1°C (35°F), the fluid should be switched to thinner 15 weight hydraulic fluid.

1. Park the machine on a level surface.
2. Unlatch and remove the cowl (Figure 14 and Figure 15).
3. Allow the machine to cool completely.
4. Remove the hydraulic tank breather/filler cap (Figure 33).

⚠ CAUTION

The hydraulic breather/filler cap is designed to pressurize the reservoir to 34 kPa (5 psi).

Loosen the cap slowly to avoid injury whenever adding oil or working on the hydraulic system. Use a wrench on the hex directly under the cap.

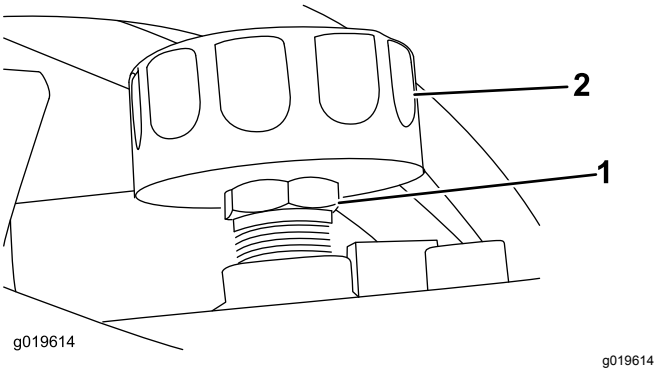

Figure 33

1. Hex
2. Breather/filler cap

5. Place a large drain pan under the drain plug located at the bottom of the hydraulic tank.
6. Remove the drain plug and allow the oil to drain into the pan.
7. When finished, install and tighten the drain plug.

   Note: Dispose of the used oil at a certified recycling center.

8. Fill the hydraulic tank with approximately 28.4 liters (30 US quarts) of hydraulic fluid as specified previously.
9. Start the engine and let it run for a 2 to 3 minutes.
10. Shut off the engine.
11. Check the hydraulic fluid level and add more hydraulic fluid if necessary.
12. Install the cowl and secure the latches.

Checking the Hydraulic Lines

Service Interval: Every 40 hours—Check the hydraulic lines for leaks, loose fittings, kinked lines, loose mounting supports, wear, and deterioration. (Make necessary repairs before operating.)

Every 1,500 hours/Every 2 years (whichever comes first)—Replace all moving hydraulic hoses.

⚠ WARNING

Hydraulic fluid escaping under pressure can penetrate skin and cause injury. Fluid injected into the skin must be surgically removed within a few hours by a doctor familiar with this form of injury, or gangrene may result.

- **Keep your body and hands away from pinhole leaks or nozzles that eject high pressure hydraulic fluid.**
- **Use cardboard or paper to find hydraulic leaks; never use your hands.**

Cleaning

Removing Debris from the Machine

Service Interval: Before each use or daily

Important: **Operating the engine with blocked screens, dirty or plugged cooling fins, and/or cooling shrouds removed, will result in engine damage from overheating.**

1. Park the machine on a level surface and shut off the engine. Allow the engine to cool.
2. Unlatch and remove the cowl.
3. Clean any debris from under the hopper.
4. Wipe away debris from the air cleaner.
5. Clean any debris buildup on the engine and in the transmission with a brush or blower.

   Important: **It is preferable to blow dirt out rather than washing it out. If you use water, keep it away from electrical items and hydraulic valves.**

   Do not use a high-pressure washer. High-pressure washing can damage the electrical system and hydraulic valves or deplete grease.
6. Install the cowl and secure the latches.

Storage

1. Shut off the engine and engage the parking brake.
2. Remove dirt and grime from the external parts of the entire machine, especially the engine. Clean dirt and chaff from the outside of the engine cylinder head fins and blower housing.
3. Service the air cleaner; refer to Servicing the Air Cleaner (page 22).
4. Grease the machine; refer to Greasing the Machine (page 21).
5. Change the engine crankcase oil; refer to Changing the Engine Oil (page 24).
6. For storage over 30 days, prepare the machine as follows:
   A. Add a petroleum-based stabilizer/conditioner to fuel in the tank. Follow mixing instructions from stabilizer manufacturer. **Do not use an alcohol based stabilizer (ethanol or methanol).**

      Note: Fuel stabilizer/conditioner is most effective when mixed with fresh fuel and used at all times.

   B. Run the engine for 5 minutes to distribute conditioned fuel through the fuel system.
   C. Shut off the engine, allow the engine to cool, and drain the fuel tank using a pump type syphon.
   D. Start the engine and run it until it stops.
   E. Choke the engine.
   F. Start and run the engine until it will not start again.
   G. Dispose of fuel properly. Recycle as per local codes.

   Important: **Do not store stabilizer/conditioned fuel over 90 days.**
7. Remove the spark plug and check the condition of it; refer to Replacing the Spark Plug (page 24).
8. Prepare the engine as follows:
   A. With the spark plug removed from the engine, pour 2 tablespoons of engine oil into the spark plug hole.
   B. Place a rag over the spark plug hole to catch any oil spray, then pull the starter rope to crank the engine and distribute the oil inside the cylinder.
   C. Install the spark plug.

      Note: Do not install the wire on the spark plug.
9. Check and tighten all bolts, nuts, and screws. Repair or replace any part that is damaged.
10. Paint all scratched or bare metal surfaces. Paint is available from your Authorized Service Dealer.
11. Store the machine in a clean, dry garage or storage area.
12. Cover the machine to protect it and keep it clean.

Notes:

California Proposition 65 Warning Information

What is this warning?

You may see a product for sale that has a warning label like the following:

WARNING: Cancer and Reproductive Harm—www.p65Warnings.ca.gov.

What is Prop 65?

Prop 65 applies to any company operating in California, selling products in California, or manufacturing products that may be sold in or brought into California. It mandates that the Governor of California maintain and publish a list of chemicals known to cause cancer, birth defects, and/or other reproductive harm. The list, which is updated annually, includes hundreds of chemicals found in many everyday items. The purpose of Prop 65 is to inform the public about exposure to these chemicals.

Prop 65 does not ban the sale of products containing these chemicals but instead requires warnings on any product, product packaging, or literature with the product. Moreover, a Prop 65 warning does not mean that a product is in violation of any product safety standards or requirements. In fact, the California government has clarified that a Prop 65 warning "is not the same as a regulatory decision that a product is 'safe' or 'unsafe.'" Many of these chemicals have been used in everyday products for years without documented harm. For more information, go to https://oag.ca.gov/prop65/faqs-view-all.

A Prop 65 warning means that a company has either (1) evaluated the exposure and has concluded that it exceeds the "no significant risk level"; or (2) has chosen to provide a warning based on its understanding about the presence of a listed chemical without attempting to evaluate the exposure.

Does this law apply everywhere?

Prop 65 warnings are required under California law only. These warnings are seen throughout California in a wide range of settings, including but not limited to restaurants, grocery stores, hotels, schools, and hospitals, and on a wide variety of products Additionally, some online and mail order retailers provide Prop 65 warnings on their websites or in catalogs.

How do the California warnings compare to federal limits?

Prop 65 standards are often more stringent than federal and international standards. There are various substances that require a Prop 65 warning at levels that are far lower than federal action limits. For example, the Prop 65 standard for warnings for lead is 0.5 µg/day, which is well below the federal and international standards.

Why don't all similar products carry the warning?

- Products sold in California require Prop 65 labelling while similar products sold elsewhere do not.
- A company involved in a Prop 65 lawsuit reaching a settlement may be required to use Prop 65 warnings for its products, but other companies making similar products may have no such requirement.
- The enforcement of Prop 65 is inconsistent.
- Companies may elect not to provide warnings because they conclude that they are not required to do so under Prop 65; a lack of warnings for a product does not mean that the product is free of listed chemicals at similar levels.

Why does Toro include this warning?

Toro has chosen to provide consumer with as much information as possible so that they can make informed decisions about the products they buy and use. Toro provides warnings in certain cases based on its knowledge of the presence of one or more listed chemicals without evaluating the level of exposure, as not all the listed chemical provide exposure limit requirements. While the exposure from Toro products may be negligible or well within the "no significant risk" range, out of an abundance of caution, Toro has elected to provide the Prop 65 warnings. Moreover, if Toro does not provide these warnings, it could be sued by the State of California or by private parties seeking to enforce Prop 65 and subject to substantial penalties.