Form No. 3421-433 Rev A

TORO®

Count on it.

Operator's Manual

4-in-1 Bucket

TX 1000 Compact Tool Carrier

Model No. BU-003867
Model No. BU-003879
Model No. BU-003997

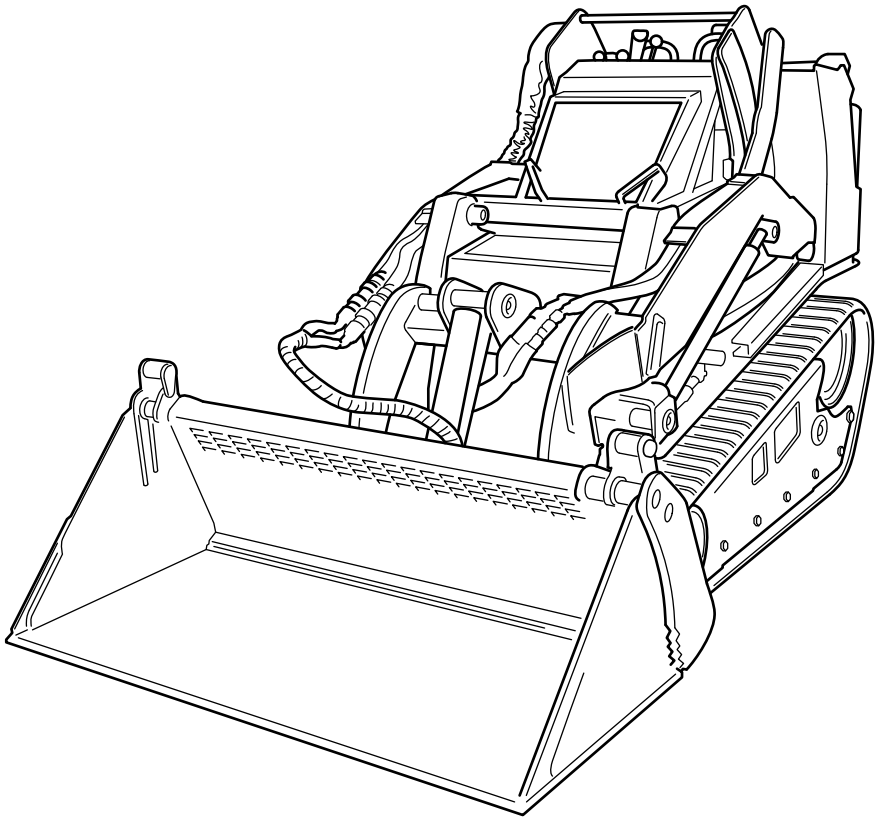

Register at www.Toro.com.
Original Instructions (EN)

3421-433 A

Introduction

Read this information carefully to learn how to operate and maintain your product properly and to avoid injury and product damage. You are responsible for operating the product properly and safely.

You may contact Toro directly at www.Toro.com for product safety and operation training materials, accessory information, help finding a dealer, or to register your product.

Whenever you need service, genuine Toro parts, or additional information, contact an Authorized Service Dealer or Toro Customer Service and have the model and serial numbers of your product ready. Figure 1 identifies the location of the model and serial numbers on the product. Write the numbers in the space provided.

Go to www.Toro.com to access warranty, parts, and other product information.

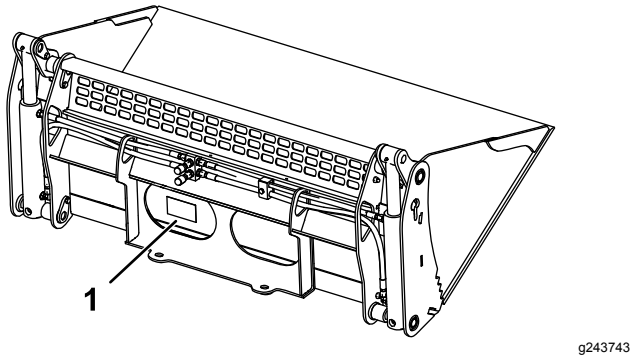

g243743

Figure 1

1. Model and serial number location

Model No. _____

Serial No. _____

This manual identifies potential hazards and has safety messages identified by the safety-alert symbol (Figure 2), which signals a hazard that may cause serious injury or death if you do not follow the recommended precautions.



g000502

Figure 2

Safety-alert symbol

This manual uses 2 words to highlight information. **Important** calls attention to special mechanical information and **Note** emphasizes general information worthy of special attention.

Contents

Safety 3
- General Safety 3
- Slope Safety 3
- Attachment Safety 4
- Maintenance and Storage Safety 4
- Before Digging 4
- Safety and Instructional Decals 5

Product Overview 5
- Controls 5
- Specifications 6
- Maximum Material Density at Capacity 6

Operation 7
- Installing and Removing the Attachment 7
- 4-in-1 Operation and Control 7
- Transport Position 7
- Bucket Operation 8
- Blade Operation 8
- Leveller Operation 8
- Grapple Bucket Operation 8

Maintenance 9
- Recommended Maintenance Schedule(s) 9
- Lubricating the Bucket 9

Storage 9

Troubleshooting 10

© 2018—The Toro® Company

8111 Lyndale Avenue South
Bloomington, MN 55420

Contact us at www.Toro.com.
Printed in Australia

All Rights Reserved

Safety

⚠ DANGER

There may be buried utility lines in the work area. Digging into them may cause a shock or an explosion.

Have the property or work area marked for buried lines and do not dig in marked areas. Contact your local marking service or utility company to have the property marked (Call 1100 for the nationwide marking service).

General Safety

Always follow all safety instructions to avoid serious injury or death.

- Do not carry a load with the arms raised; always carry loads close to the ground.
- Have the property or work area marked for buried lines and other objects, and do not dig in marked areas.
- Read and understand the content of this *Operator's Manual* before starting the engine.
- Use your full attention while operating the machine. Do not engage in any activity that causes distractions; otherwise, injury or property damage may occur.
- Never allow children or untrained people to operate the machine.
- Keep your hands and feet away from the moving components and attachments.
- Do not operate the machine without the guards and other safety protective devices in place and working on the machine.
- Keep bystanders and pets a safe distance away from the machine.
- Stop the machine, shut off the engine, and remove the key before servicing, fueling, or unclogging the machine.

Improperly using or maintaining this machine can result in injury. To reduce the potential for injury, comply with these safety instructions and always pay attention to the safety-alert symbol, which means Caution, Warning, or Danger—personal safety instruction. Failure to comply with these instructions may result in personal injury or death.

You can find additional safety information where needed throughout this *Operator's Manual*.

Slope Safety

- **Operate the machine up and down slopes with the heavy end of the machine uphill.** Weight distribution changes with attachments. An empty bucket makes the rear of the machine the heavy end, and a full bucket makes the front of the machine the heavy end. Most other attachments make the front of machine the heavy end.
- Raising the loader arms on a slope affects the stability of the machine. Keep the loader arms in the lowered position when on slopes.
- Slopes are a major factor related to loss of control and tip-over accidents, which can result in severe injury or death. Operating the machine on any slope or uneven terrain requires extra caution.
- Establish your own procedures and rules for operating on slopes. These procedures must include surveying the site to determine which slopes are safe for machine operation. Always use common sense and good judgment when performing this survey.
- Slow down and use extra care on hillsides. Ground conditions can affect the stability of the machine.
- Avoid starting or stopping on a slope. If the machine loses traction, proceed slowly, straight down the slope.
- Avoid turning on slopes. If you must turn, turn slowly and keep the heavy end of the machine uphill.
- Keep all movements on slopes slow and gradual. Do not make sudden changes in speed or direction.
- If you feel uneasy operating the machine on a slope, do not do it.
- Watch for holes, ruts, or bumps, as uneven terrain could overturn the machine. Tall grass can hide obstacles.
- Use caution when operating on wet surfaces. Reduced traction could cause sliding.
- Do not operate the machine near drop-offs, ditches, embankments, or bodies of water. The machine could suddenly roll over if a wheel or track goes over the edge or the edge caves in. Maintain a safe distance between the machine and any hazard.
- Do not remove or add attachments on a slope.
- Do not park the machine on a hillside or slope.

Attachment Safety

- Wear gloves, eye protection, long pants, substantial slip-resistant footwear, and hearing protection during operation or while adjusting or repairing the machine. Tie back hair and do not wear loose jewelry.
- After striking a foreign object, shut off the engine, remove the key, thoroughly inspect the attachment for any damage, and repair the damage before starting and operating the attachment.
- Always lower the attachment each time you shut off the machine or leave the operating position.
- Clean any dirt or debris that may hinder connecting the attachment to the machine. Ensure that the attachment-locking pins are fully seated in the holes of the attachment-mount plate. Refer to the *Operator's Manual* for the machine for detailed information on safely connecting an attachment to your machine.
- When lifting the attachment keep it level and prevent the load from spilling backward.

Maintenance and Storage Safety

- Check fasteners at frequent intervals for proper tightness to ensure that the equipment is in safe operating condition.
- Refer to the *Operator's Manual* for important details if you store the attachment for an extended period of time
- Maintain or replace any safety and instruction labels that are damaged or missing.

Before Digging

To prevent damage and disruption to underground pipe and cable networks in your proposed excavation site, contact the Dial Before You Dig service. You can dial 1100 to access plans for underground networks anywhere in Australia. You may also log onto www.dialbeforeyoudig.com.au for additional information.

Remember, everyone has a Duty of Care to locate underground pipes and cables before digging or excavating.

Digging or excavating without first dialing 1100 could lead to injury or death to you and bystanders. It could also lead to costly disruption of essential services and financial penalties.



g244146

Figure 3

Safety and Instructional Decals

Safety decals and instructions are easily visible to the operator and are located near any area of potential danger. Replace any decal that is damaged or missing.

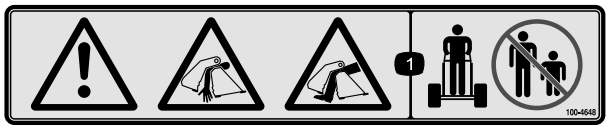

decal100-4648

100-4648

1. Warning; crushing of arm hazard; crushing of leg hazard—keep bystanders away from the machine.

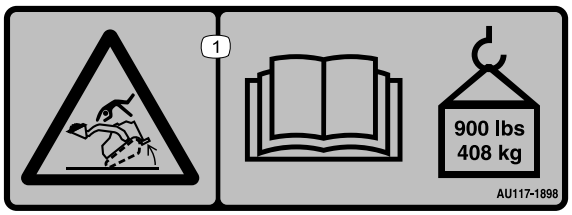

decalau117-1898

AU117-1898

1. Tipping hazard—read the *Operator's Manual*; the maximum load is 408 kg (900 lb).

Product Overview

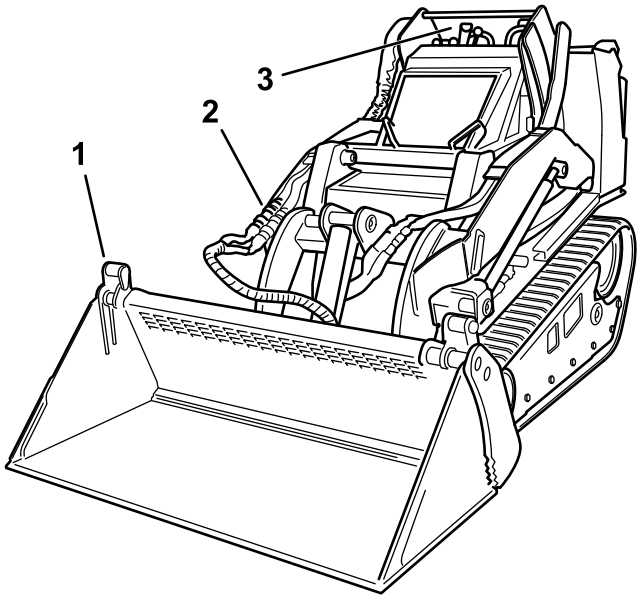

g244100

Figure 4

1. 4-in-1 bucket
2. Hydraulic connections
3. Loader arm/attachment tilt lever

Controls

Become familiar with the controls (Figure 5) before you start the engine and operate the traction unit. Refer to 4-in-1 Operation and Control (page 7) for more info on controlling the bucket.

Auxiliary Hydraulics Low Flow Switch

Press on the front of the auxiliary hydraulics low flow switch to turn it on.

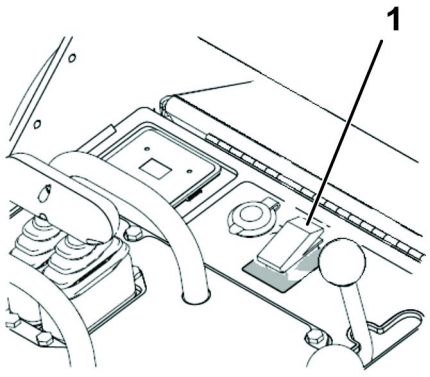

g239507

Figure 5

1. Low flow switch

Specifications

Note: Specifications and design are subject to change without notice.

4-in-1 Extra High Volume Bucket

Model	BU003867
Width	1346 mm (53 inches)
Length	804 mm (31.7 inches)
Height	558 mm (22 inches)
Weight	205 kg (451.9 lbs)
Capacity (SAE struck capacity)	0.22 m^3 (7.8ft^3)
Maximum density, heaped	2151 kg/m^3 (134.3 lb/ft^3)
Maximum density, struck	2558 kg/m^3 (159.7 lb/ft^3)

4-in-1 Wide Bucket

Model	BU003897
Width	1067 mm (42 inches)
Length	685 mm (27 inches)
Height	558 mm (22 inches)
Weight	160 kg (352.7 lbs)
Capacity (SAE struck capacity)	0.15 m^3 (5.3 ft^3)
Maximum density, heaped	1796 kg/m^3 (112.1 lb/ft^3)
Maximum density, struck	2156 kg/m^3 (134.6 lb/ft^3)

4-in-1 Narrow Bucket

Model	BU003997
Width	863 mm (34 inches)
Length	685 mm (27 inches)
Height	558 mm (22 inches)
Weight	139 kg (306.4 lbs)
Capacity (SAE struck capacity)	0.12 m^3 (4.3 ft^3)
Maximum density, heaped	1004 kg/m^3 (66.7 lb/ft^3)
Maximum density, struck	1221 kg/m^3 (76.2 lb/ft^3)

Maximum Material Density at Capacity

The density of the materials moved by the bucket varies and, therefore, so does the amount of material that the bucket can carry before reaching the maximum load rating. The tables in Specifications (page 6) list the density of material that can be carried, both heaped and struck (i.e., leveled off), in the bucket. The table below lists common materials and their densities.

To move the materials with densities greater than the maximum allowed for the bucket, reduce the volume of the material placed in the bucket.

Material Density

Material	Density (Approximate)
Caliche	1250 kg/m^3 (78 lb/ft^3)
Clay: Natural bed Dry Wet With gravel, dry With gravel, wet	 1600 kg/m^3 (104 lb/ft^3) 1480 kg/m^3 (93 lb/ft^3) 1660 kg/m^3 (104 lb/ft^3) 1420 kg/m^3 (89 lb/ft^3) 1540 kg/m^3 (96 lb/ft^3)
Coal: Anthracite, broken Bituminous, broken	 1100 kg/m^3 (69 lb/ft^3) 830 kg/m^3 (52 lb/ft^3)
Earth: Dry, packed Wet, packed Loam	 1510 kg/m^3 (94 lb/ft^3) 1600 kg/m^3 (100 lb/ft^3) 1250 kg/m^3 (78 lb/ft^3)
Granite, broken or large crushed	1660 kg/m^3 (104 lb/ft^3)
Gravel: Dry Pit run (graveled sand) Dry, 13 to 51 mm (1/2 to 2 inch) Wet, 13 to 51 mm (1/2 to 2 inch)	 1510 kg/m^3 (94 lb/ft^3) 1930 kg/m^3 (120 lb/ft^3) 1690 kg/m^3 (106 lb/ft^3) 2020 kg/m^3 (126 lb/ft^3)
Limestone, broken or crushed	1540 kg/m^3 (96 lb/ft^3)
Sand: Dry Wet With gravel, dry With gravel, wet	 1420 kg/m^3 (89 lb/ft^3) 1840 kg/m^3 (115 lb/ft^3) 1720 kg/m^3 (107 lb/ft^3) 2020 kg/m^3 (126 lb/ft^3)
Sandstone, broken	1510 kg/m^3 (94 lb/ft^3)
Shale	1250 kg/m^3 (78 lb/ft^3)
Slag, broken	1750 kg/m^3 (109 lb/ft^3)
Stone, crushed	1600 kg/m^3 (100 lb/ft^3)
Topsoil	950 kg/m^3 (59 lb/ft^3)

Operation

The 4-in-1 bucket can be used in 4 different operating modes:

- Bucket
- Blade
- Leveller
- Grapple bucket

Installing and Removing the Attachment

Refer to the *Operator's Manual* for the traction unit for the installation and removal procedure.

Important: **Before installing the attachment, position the machine on a level surface, ensure that the mount plates are free of any dirt or debris, and ensure that the pins rotate freely. If the pins do not rotate freely, grease them.**

Note: Always use the traction unit to lift and move the attachment.

⚠ WARNING

If you do not fully seat the quick-attach pins through the attachment mount plate, the attachment could fall off the machine, crushing you or bystanders.

Ensure that the quick-attach pins are fully seated in the attachment mount plate.

⚠ WARNING

Hydraulic fluid escaping under pressure can penetrate skin and cause injury. Fluid injected into the skin must be surgically removed within a few hours by a doctor familiar with this form of injury; otherwise, gangrene may result.

- **Ensure that all hydraulic-fluid hoses and lines are in good condition and all hydraulic connections and fittings are tight before applying pressure to the hydraulic system.**
- **Keep your body and hands away from pinhole leaks or nozzles that eject high-pressure hydraulic fluid.**
- **Use cardboard or paper to find hydraulic leaks; never use your hands.**

⚠ CAUTION

Hydraulic couplers, hydraulic lines/valves, and hydraulic fluid may be hot. If you contact hot components, you may be burned.

- **Wear gloves when operating the hydraulic couplers.**
- **Allow the machine to cool before touching hydraulic components.**
- **Do not touch hydraulic fluid spills.**

4-in-1 Operation and Control

After you attach the 4-in-1 bucket to the mount plate of the traction unit, ensure that the hydraulic couplers are connected, and that the auxiliary hydraulics low flow system is turned on. Start and run the machine at full throttle.

Use the loader arm/attachment tilt lever to control the bucket attachment; refer to your *Operator's Manual*.

Move the auxiliary hydraulics lever from the neutral to forward flow direction to open the bucket jaws, move the lever from neutral to reverse flow direction to close the jaws; refer to your *Operator's Manual*.

When loading material, always have the bucket level to the ground and move forward into the material to be lifted. When the bucket is full, tilt it rearward to decrease the lifting resistance when you lift the load.

Transport Position

When transporting a load, keep the attachment as close to the ground as possible, no more than 6 inches above the lowest position. Tilt it rearward to keep the load level.

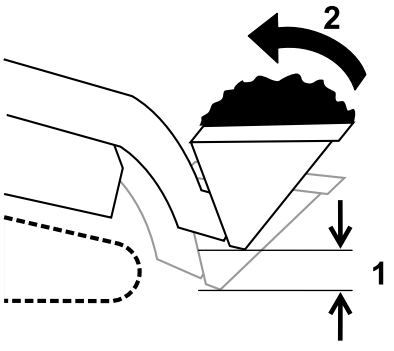

g240205

Figure 6

1. No more than 6 inches above the lowest position
2. Tilt the load rearward

Bucket Operation

You can draw the jaws together to use this attachment as a standard bucket. You can also open the 4-in-1 bucket jaws to dump the contents into a higher area than a standard bucket can reach.

When loading material, always have the bucket level to the ground and move forward into the material to be lifted. When the bucket is full, tilt it rearward to decrease the lifting resistance when you lift the load.

When transporting a load, keep the bucket as close to the ground as possible.

Blade Operation

With the jaws completely open, you can use the back of the bucket as a blade to push material. You can also partially close the jaws and using the bottom of the front bucket to knock the top of clumps and grade with the rear blade.

When scraping, levelling and surface stripping, lower the blade to the ground, ensuring that the cutting edge makes contact. The blade will bite into the soil as you move forward.

Leveller Operation

With the jaws fully open and the bucket tipped slightly forward so that the back cutting edge of the floor is on the ground, and the front edge is off the ground. The angle of the back cutting edge you can use the bucket as a leveller by moving the cutting edge back across the surface of the ground.

Grapple Bucket Operation

The side jaws can also be used for picking up material by closing them over objects or materials to be transported (Figure 7).

Note: Take care when using this method that you don't crush an object that you are picking up between the side jaws.

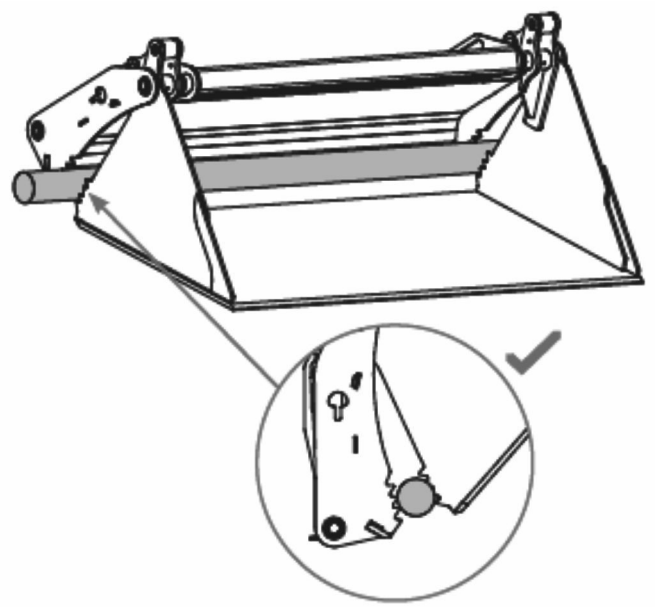

g235997

Figure 7
Correct operation

Important: **Do not use the floor to pick or pull objects. This will cause damage to the floor / bucket and will void the bucket warranty (Figure 8).**

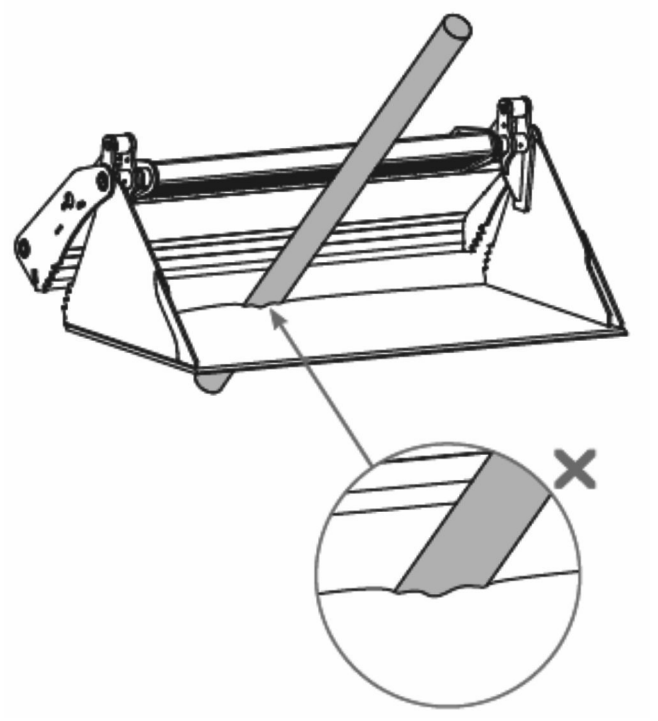

g235998

Figure 8
Incorrect operation

Maintenance

Recommended Maintenance Schedule(s)

Maintenance Service Interval	Maintenance Procedure
Before each use or daily	• Lubricate the bucket • Ensure that all fasteners are securely tightened. • Inspect the hydraulic system for leaks and loose fittings. • Clean the areas around the bucket cylinder and mount plate pivot. • Check for wear of pins, linkages, and cutting edges. • Grease the bucket pivot points.
Every 200 hours	• Lubricate the bucket • Inspect the hydraulic system for leaks and loose fittings.
Before storage	• Inspect the hydraulic system for leaks and loose fittings.

Lubricating the Bucket

Service Interval: Before each use or daily

Every 200 hours

Using a grease gun, pump general purpose grease into the six grease fittings on the 4-in-1 bucket until the grease begins to ooze (Figure 9). Wipe away any excess grease with a shop cloth.

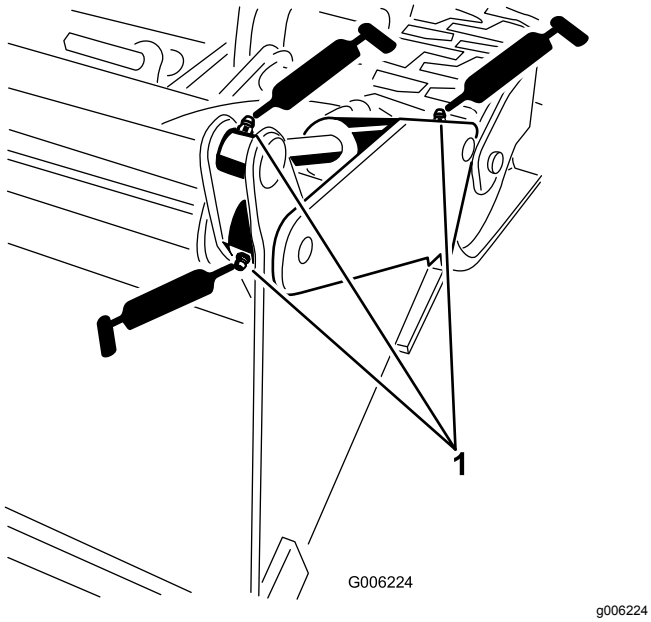

Figure 9

1. Grease fittings

Storage

1. Before long-term storage, wash the attachment with mild detergent and water to remove dirt and grime.
2. Check and tighten all bolts, nuts and screws. Repair or replace any part that is damaged or worn.
3. Ensure that all the hydraulic hose couplers are connected together to prevent contamination entering the hydraulic system.
4. Paint all scratched or bare metal surfaces.

   Note: Paint is available from your Authorized Service Dealer.
5. Grease the pivot points; refer to Lubricating the Bucket (page 9).
6. Store the attachment in a clean, dry garage or storage area.
7. Cover the bucket to protect it and keep it clean.

Troubleshooting

Problem	Possible Cause	Corrective Action
The bucket does not open or close.	1. The hydraulic coupler(s) are not completely connected.	1. Ensure that the couplers are correctly connected and secured.
	2. There is an obstruction in a hydraulic hose.	2. Find and remove the obstruction.
	3. The auxiliary valve on the traction unit is not operating correctly.	3. Repair or replace the valve.
	4. The 4-in-1 bucket hydraulic cylinder(s) are not operating correctly.	4. Repair or replace any non-operational hydraulic cylinder(s).

Notes:

The Toro Warranty

4 in 1 bucket

Conditions

The Toro® Company and its affiliate, Toro Warranty Company, pursuant to an agreement between them, jointly warrant your Toro Product ("Product") to be free from defects in materials or workmanship.

The warranty applies from the date of the Product is delivered to the original retail purchaser:

Where a warrantable condition exists, we will repair the Product at no cost to you including diagnosis, labour and parts.

Products	Warranty Period
Bucket	12 months
Wire harness and valve manifold	6 months

Instructions for Obtaining Warranty Service

If you think that your Toro Product contains a defect in materials or workmanship, follow this procedure:

1. Contact any Authorised Toro Service Dealer to arrange service at their dealership. To locate a Construction dealer convenient to you, access our web site at www.Toro.com.au.
2. Bring the product and your proof of purchase (sales receipt) and an explanation of the fault to the Service Dealer. All costs associated with the return of the product are the purchaser's responsibility.
3. If, for any reason, you are dissatisfied with the Service Dealer's analysis or with the assistance provided, contact us at:

   Customer Service Department
   Toro Australia Pty Ltd
   Unit 1, 13 Downard Street
   Braeside, Victoria 3195
   Ph: (03) 9580 7355

Owner Responsibilities

You must maintain your Toro Product by following the maintenance procedures described in the *Operator's Manual*. Such routine maintenance, whether performed by a dealer or by you, is at your expense. Parts scheduled for replacement as required maintenance ("Maintenance Parts"), are warranted for the period of time up to the scheduled replacement time for that part. Failure to perform required maintenance and adjustments can be grounds for disallowing a warranty claim.

Items and Conditions Not Covered

Not all product failures or malfunctions that occur during the warranty period are defects in materials or workmanship. This express warranty does not cover the following:

- Product failures which result in the use of non-Toro replacement parts, or from installation and use of add-on, modified, or unapproved accessories
- Product failures which result from failure to perform required maintenance and / or adjustments
- Product failures which result from operating the product in an abusive, negligent or reckless manner
- Parts subject to consumption through use unless found to be defective. Examples of parts which are consumed, or used up, during normal Product operation include, but are not limited to, digging teeth, tines, spark plugs (petrol models), tracks, filters, chains, etc.
- Failures caused by outside influence. Items considered to be outside influence include, but are not limited to, weather, storage practices, contamination, use of unapproved coolants, lubricants, additives, or chemicals, etc.
- Normal "wear and tear" items. Normal "wear and tear" includes, but is not limited to, worn painted surfaces, scratched decals or windows, etc.
- Any component covered by a separated manufacturer's warranty
- Pickup and delivery charges

General Conditions

The purchaser is covered by the national laws of each country. The rights to which the purchaser is entitled with the support of these laws are not restricted by the warranty and the benefits provided under this warranty are in addition to any rights and remedies under any applicable laws..

All repairs covered by these warranties must be performed by an Authorized Toro Service Dealer using Toro approved replacement parts. Repair by an Authorized Toro Service Dealer is your sole remedy under this warranty.

To the extent permitted by law, neither The Toro Company nor Toro Warranty Company is liable for indirect, incidental, or consequential damages in connection with the use of the Toro Products covered by these warranties, including any cost or expense of providing substitute equipment or service during reasonable periods of malfunction or non-use pending completion of repairs under these warranties.

Australian Consumer Law:

Australian customers who are considered "consumers" for the purposes of the Australian Consumer Law: Our goods come with guarantees that cannot be excluded under the Australian Consumer Law. You are entitled to a replacement or refund for a major failure and compensation for any other reasonably foreseeable loss or damage. You are also entitled to have the goods repaired or replaced if the goods fail to be of acceptable quality and the failure does not amount to a major failure.