Form No. 3418-129 Rev C

TORO®

Count on it.

Operator's Manual

PowerPlex™ 40V MAX Axial Blower

Model No. 51134—Serial No. 318000001 and Up
Model No. 51134T—Serial No. 318000001 and Up

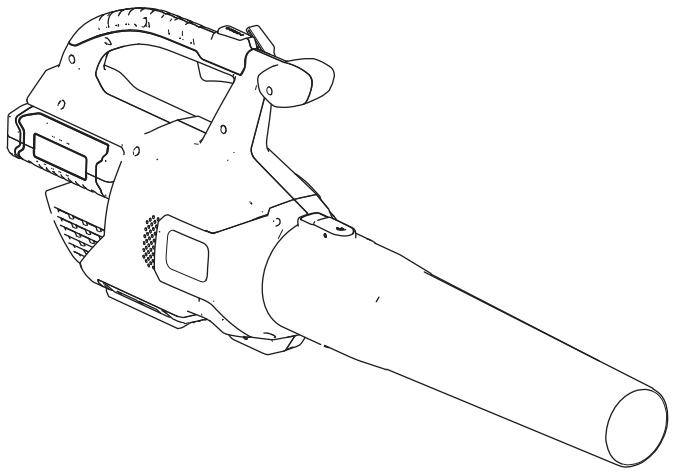

Register at www.Toro.com.
Original Instructions (EN)

CE

3418-129 C

Introduction

This blower is intended to be used by residential homeowners to move leaf-like debris as needed. It is designed to use only battery pack Models 88525 (provided with Model 51134) or 88526.

Read this information carefully to learn how to operate and maintain your product properly and to avoid injury and product damage. You are responsible for operating the product properly and safely.

You may contact Toro directly at www.Toro.com for product and accessory information, help finding a dealer, complete warranty details, or to register your product.

Model 51134T does not include a battery or a charger.

Safety

WARNING: When using electric gardening appliances, always follow basic safety precautions to reduce the risk of fire, electric shock, and personal injury, including the following:

⚠ WARNING

Failure to follow all warnings and instructions may result in electric shock, fire and/or serious personal injury.

Read all safety warnings and all instructions.

Save all warnings and instructions for future reference.

The term "power tool" in all the warnings refers to your mains-operated (corded) power tool or battery-operated (cordless) power tool.

1. **Work area safety**
   - A. **Keep the work area clean and well lit.** *Cluttered or dark areas invite accidents.*
   - B. **Do not operate power tools in explosive atmospheres, such as in the presence of flammable liquids, gasses, or dust.** *Power tools create sparks which may ignite the dust or fumes.*
   - C. **Keep children and bystanders away while operating a power tool.** *Distractions can cause you to lose control.*
2. **Personal safety**
   - A. **Stay alert; watch what you are doing and use common sense when operating a power tool. Do not use a power tool while you are tired or under the influence of drugs, alcohol, or medication.** *A moment of inattention while operating power tools may result in serious personal injury.*
   - B. **Use personal protective equipment. Always wear eye protection.** *Protective equipment such as a dust mask, non-skid safety shoes, a hard hat, or hearing protection used for appropriate conditions will reduce personal injuries.*
   - C. **Prevent unintentional starting. Ensure that the switch is in the OFF position before connecting to a power source and/or battery pack and picking up or carrying the tool.** *Carrying power tools with your finger on the switch or energizing power tools that have the switch on invites accidents.*
   - D. **Do not overreach. Keep proper footing and balance at all times.** *This*

© 2018—The Toro® Company
8111 Lyndale Avenue South
Bloomington, MN 55420

Contact us at www.Toro.com.
Printed in China
All Rights Reserved

enables better control of the power tool in unexpected situations.

E. **Dress properly. Do not wear loose clothing or jewelry. Keep your hair tied back and keep your hair, clothing, and gloves away from moving parts.** *Loose clothes, jewelry, or long hair can be caught in moving parts.*

F. **Keep your hands and feet away from the cutting area.**

3. **Power tool use and care**

A. **Do not force the power tool. Use the correct power tool for your application.** *The correct power tool will do the job better and safer at the rate for which it was designed.*

B. **Do not use the power tool if the switch does not turn it on and off.** *Any power tool that cannot be controlled with the switch is dangerous and must be repaired.*

C. **Remove the battery pack from the power tool before making any adjustments, changing accessories, or storing power tools.** *Such preventive safety measures reduce the risk of starting the power tool accidentally.*

D. **Store idle power tools out of the reach of children and do not allow persons unfamiliar with the power tool or these instructions to operate the power tool.** *Power tools are dangerous in the hands of untrained users.*

E. **Store idle appliances indoors.** *When not in use, appliances should be stored indoors in a dry and high or locked-up place, out of the reach of children.*

F. **Maintain power tools. Check for misalignment or binding of moving parts, breakage of parts and any other condition that may affect the power tools operation. If damaged, have the power tool repaired before use.** *Many accidents are caused by poorly maintained power tools.*

G. **Keep cutting tools sharp and clean.** *Properly maintained cutting tools with sharp cutting edges are less likely to bind and are easier to control.*

H. **Use the power tool in accordance with these instructions and in the manner intended for the particular type of power tool, taking into account the working conditions and the work to be performed.** *Using the power tool for operations different from those intended could result in a hazardous situation.*

I. **Keep guards in place and in working order.**

4. **Service**

Have your power tool serviced by a qualified repair person using only identical replacement parts. *This will ensure that the safety of the power tool is maintained.*

5. **Battery Safety**

A. Do not charge appliance in rain, or in wet locations.

B. Do not use battery-operated appliance in the rain.

C. Use only the following type and size battery(ies): Toro battery Model 88525 or 88526.

D. Remove or disconnect the battery before servicing, cleaning, or removing material from the gardening appliance.

E. Do not dispose of the battery(ies) in a fire. The cell may explode. Check with local codes for possible special disposal instructions.

F. Do not open or mutilate the battery(ies). Released electrolyte is corrosive and may cause damage to the eyes or skin. It may be toxic if swallowed.

G. Exercise care in handling batteries in order not to short the battery with conducting materials such as rings, bracelets, and keys. The battery or conductor may overheat and cause burns.

SAVE THESE INSTRUCTIONS

Sound Pressure

This unit has a sound pressure level at the operator's ear of 81.3 dBA, with an Uncertainty Value (K) of 3 dBA.

The sound pressure level was determined according to the procedures outlined in EN ISO 11201.

Sound Power

This unit has a guaranteed sound power level of 96 dBA, which includes an Uncertainty Value (K) of 3 dBA.

The sound power level was determined according to the procedures outlined in EN ISO 11094.

Hand/Arm Vibration

Measured vibration level for right hand = 3.28 m/s^2

Measured vibration level for left hand = 1.8 m/s^2

Uncertainty Value (K) = 1.5 m/s^2

The measured values were determined according to the procedures outlined in EN ISO 20643.

Important: **The vibration emission during actual use of the power tool can differ from the declared total value depending on the way the tool is used. The operator should take safety measures based on an estimation of exposure in the actual conditions of use.**

Safety and Instructional Decals

Safety decals and instructions are easily visible to the operator and are located near any area of potential danger. Replace any decal that is damaged or missing.

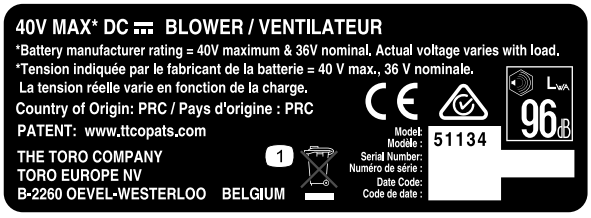

decal136-2493

136-2493

1. Do not discard.

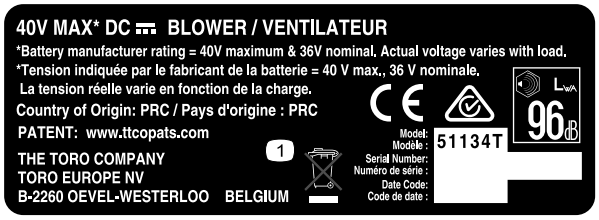

decal136-2494

136-2494

1. Do not discard.

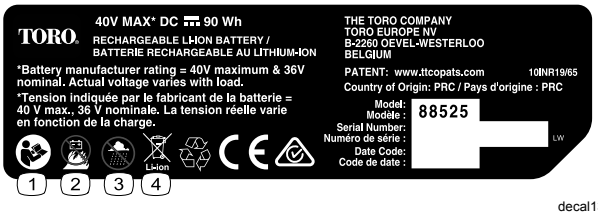

decal136-2499

136-2499

1. Read the *Operator's Manual*.
2. Do not burn the battery.
3. Do not operate in wet conditions.
4. Do not discard.



decal136-2501

136-2501

1. Do not discard.
2. Double insulated
3. Residential
4. Read the *Operator's Manual*.

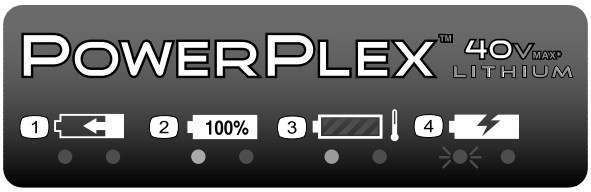

decal136-2504

136-2504

1. The battery pack is charging.
2. The battery pack is fully charged.
3. The battery pack is too warm.
4. The battery pack needs to be replaced.

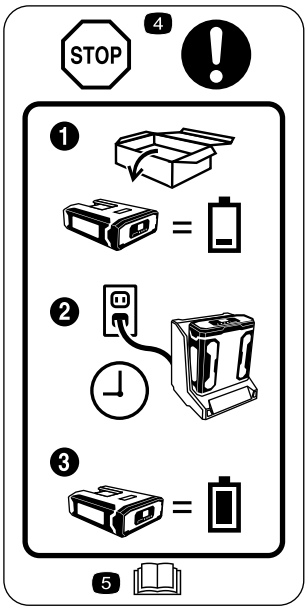

decal136-2534

136-2534

1. The battery does not come out of the box fully charged.
2. Place the battery in the battery charger.
3. Wait until the battery is fully charged before the first use.
4. Stop—follow these instructions before first use.
5. Read the *Operator's Manual*.



decal136-2536

136-2536

1. Warning—keep bystanders away from the machine in all directions.
2. Thrown object hazard—keep bystanders away from the machine.

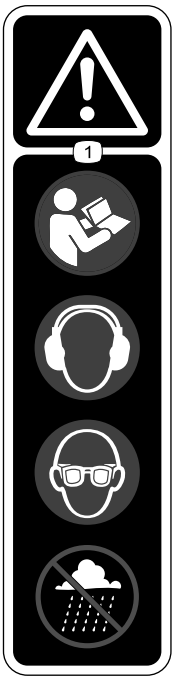

decal136-2537

136-2537

1. Warning—read the *Operator's Manual*; wear hearing protection; wear eye protection; do not operate in wet conditions.

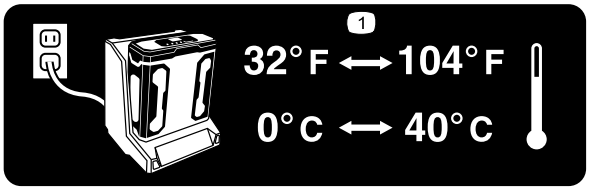

decal136-2539

136–2539

1. Charge the battery where the temperature is between 0°C and 40°C (32°F and 104°F).

Setup

Note: The battery pack is not fully charged when you purchase it. Before using the tool for the first time, refer to Charging the Battery Pack (page 9).

1

Mounting the Battery Charger (Optional)

No Parts Required

Procedure

If desired, mount the battery charger securely on a wall using the wall-mount key holes on the back of the charger.

Mount it indoors (such as a garage or other dry place), near a power outlet, and out of the reach of children.

Refer to Figure 1 for assistance in mounting the charger.

Note: Slide and twist the charger over the appropriately positioned hardware to secure the charger in place (hardware not included).

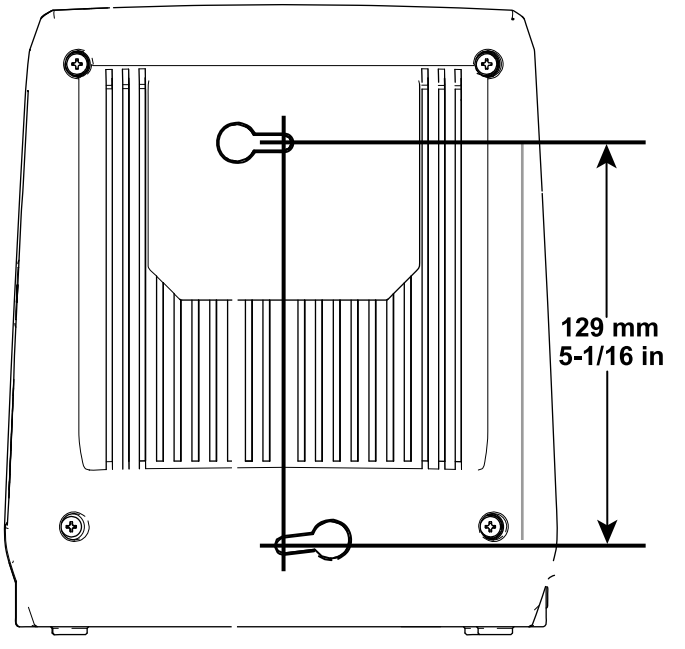

g194202

Figure 1

2

Assembling the Blower

Parts needed for this procedure:

1	Blower tube

Procedure

1. Slide the blower tube onto the blower housing. You may need to press down on the tab for the blower tube to lock into place (Figure 2).

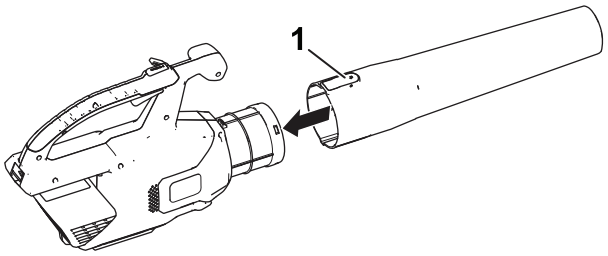

g190102

Figure 2

1. Tab

2. Align the cavity on the battery pack with the tongue in the handle housing, grasp the handle, and push the battery pack into the handle until the latch locks into place (Figure 3).

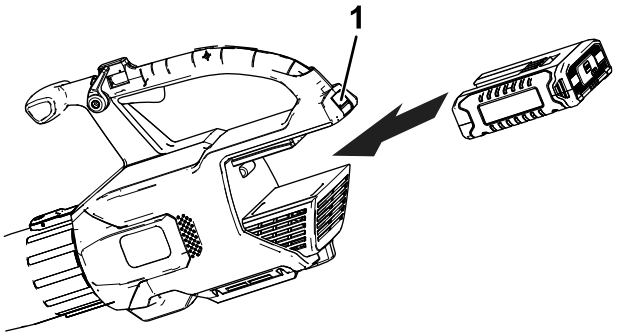

g194149

Figure 3

1. Battery latch

Product Overview

Specifications

Weights

Mass of the machine without the battery	2.8 kg (6.2 lb)
Mass of the machine with battery 88525	3.8 kg (8.4 lb)
Mass of the machine with battery 88526	4.4 kg (9.7 lb)

Appropriate Temperature Ranges

Charge the battery at	0°C (32°F) to 40°C (104°F)*
Use products at	-15°C (5°F) to 60°C (140°F)
Store products at	-15°C (5°F) to 60°C (140°F)
Unplug the charger if	Below 0°C (32°F) or above 40°C (104°F)

*Charging time will increase if you do not charge the battery within this range.

Store the tool, battery pack and battery charger in an enclosed clean, dry area.

Operation

⚠ WARNING

The blower can throw debris, possibly causing serious personal injury to the operator or bystanders.

- **Do not blow hard objects such as nails, bolts, or rocks.**
- **Do not operate the blower near bystanders or pets.**
- **Use extra care when cleaning debris from stairs or other tight areas.**
- **Wear safety goggles or other suitable eye protection, long pants, and shoes.**

Starting the Blower

1. Make sure that the vents on the blower are clear of any dust and debris.
2. To start the blower, squeeze the variable-speed trigger (Figure 4).

   Note: Engage the speed lock to keep the machine on without pressing the variable-speed trigger (Figure 4).

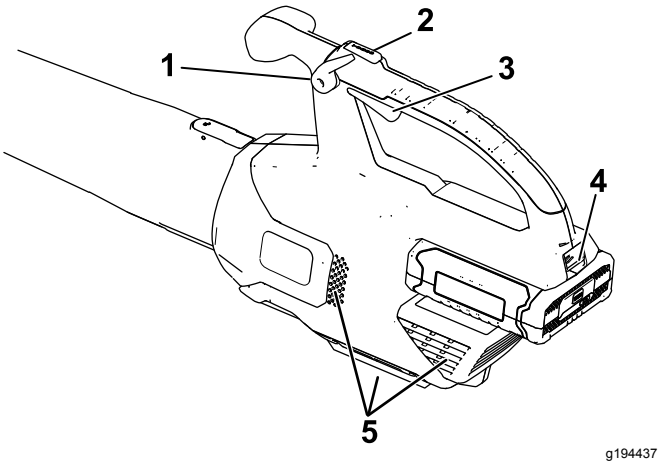

Figure 4

1. Speed lock
2. Turbo boost button
3. Variable-speed trigger
4. Battery latch
5. Blower venting areas

Adjusting the Air Speed of the Blower

To accelerate the blower speed, press and hold the turbo boost button for the desired amount of time (Figure 4).

To adjust the air speed as you blow, use the variable-speed trigger (Figure 4).

To maintain the current air speed, engage the speed lock (Figure 4).

Shutting Off the Blower

To shut off the blower, disengage the speed lock (if in use) and release the variable-speed trigger (Figure 4).

Important: **After stopping the blower, do not leave the speed lock engaged with the battery pack in the blower.**

Whenever you are not using the blower or are transporting the blower to or from the work area, remove the battery pack.

Removing the Blower Tube

Press down on the tab to separate the blower tube from the blower (Figure 5).

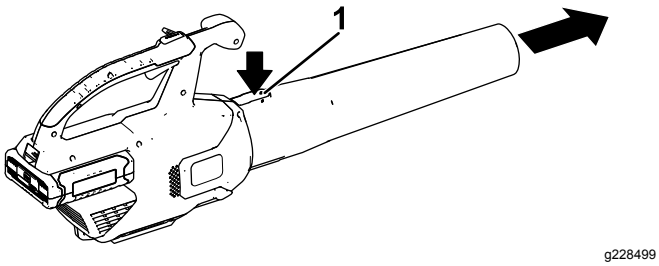

g228499

Figure 5

1. Tab

Removing the Battery from the Blower

Press down on the battery latch to separate the battery from the blower (Figure 6).

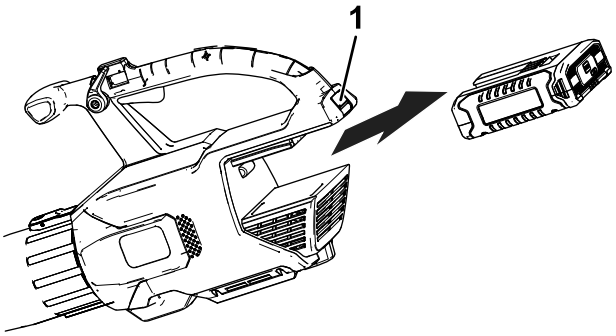

g194150

Figure 6

1. Battery latch

Using the Attachments

Use the provided attachments as needed.

Note: The Gutter Cleaner Kit (Model 51667) and Oscillating Tube (Model 51764) are sold separately.

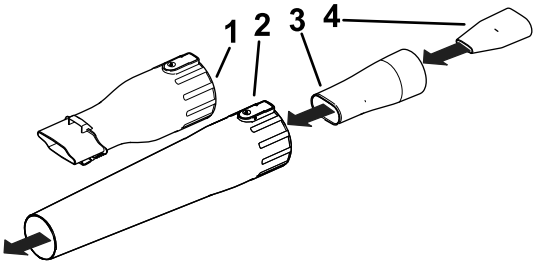

g244381

Figure 7

1. Gutter cleaner adaptor
2. Blower tube
3. Oscillator/MPH insert adapter
4. MPH insert

Charging the Battery Pack

Important: **Read all safety precautions.**

Important: **Charge the battery pack only in temperatures that are within the appropriate range; refer to Specifications (page 8).**

Note: At any time, press the battery-charge-indicator button on the battery pack to display the current charge (LED indicators).

1. Plug the power cord that matches your power outlets into the battery charger.
2. Make sure that the vents on the battery are clear of any dust and debris.
3. Line up the cavity in the battery pack (Figure 8) with the tongue on the charger.

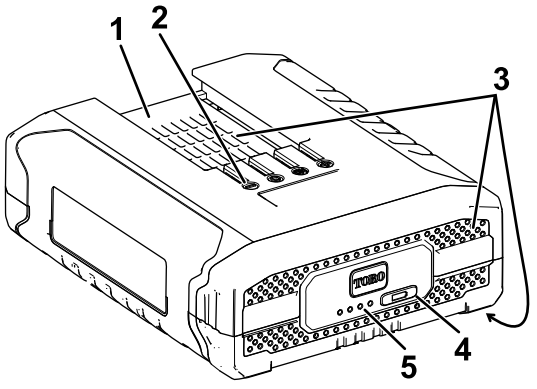

g244370

Figure 8

1. Battery pack cavity
2. Battery pack terminals
3. Battery pack venting areas
4. Battery-charge-indicator button
5. LED indicators (current charge)

4. Make sure that the vents on the battery charger are clear of any dust and debris.
5. Slide the battery pack into the charger until it is fully seated (Figure 9).

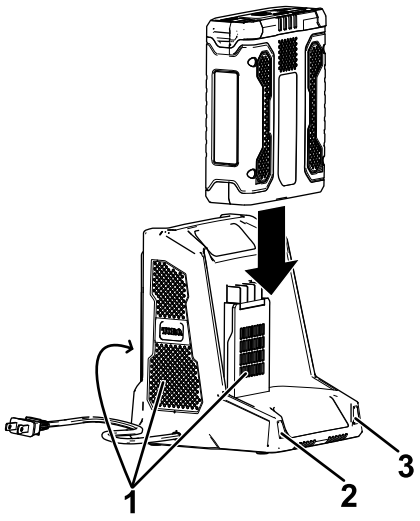

g194423

Figure 9

1. Charger venting areas
2. Left indicator light
3. Right indicator light

6. To remove the battery pack, slide the battery backward out of the charger.
7. Refer to the following table to interpret the LED indicators on the battery charger.

Left Light	Right Light	Indicates:
Off	Red	Charger is on; no battery pack inserted
Red	Red	Battery pack is charging
Green	Red	Battery pack is charged
Orange	Red	Battery pack is too warm
Red Blinking	Red	Replace the battery pack

Storage

Important: **Store the tool, battery pack, and charger only in temperatures that are within the appropriate range; refer to Specifications (page 8).**

Important: **If you are storing the tool for a year or longer, remove the battery pack from the tool and charge the battery pack until 2 or 3 LED indicators turn blue on the battery. Do not store a fully charged or fully depleted battery. When you are ready to use the tool again, charge the battery pack until the left indicator light turns green on the charger or all 4 LED indicators turn blue on the battery.**

- Disconnect the product from the power supply (i.e., remove the plug from the power supply or the battery pack) and check for damage after use.
- Clean all foreign material from the product.
- When not in use, store the tool, battery pack, and battery charger out of the reach of children.
- Keep the tool, battery pack, and battery charger away from corrosive agents, such as garden chemicals and de-icing salts.
- To reduce the risk of serious personal injury, do not store the battery pack outside or in vehicles.
- Store the tool, battery pack, and battery charger in a enclosed clean, dry area.

Preparing the Battery Pack for Recycling

Important: **Upon removal, cover the terminals of the battery pack with heavy-duty adhesive tape. Do not attempt to destroy or disassemble the battery pack or remove any of its components. Lithium-ion battery packs must be recycled or disposed of properly at the nearest battery recycling facility.**

	For more information on recycling lithium-ion battery packs and to locate the battery recycling facility closest to you, visit www.Call2Recycle.org (US and Canada only). If you are located outside of the US and Canada, please contact your authorized Toro distributor.

Troubleshooting

Perform only the steps described in these instructions. All further inspection, maintenance, and repair work must be performed by an authorized service center or a similarly qualified specialist if you cannot solve the problem yourself.

Problem	Possible Cause	Corrective Action
The battery pack loses charge quickly.	1. The battery pack is over or under the appropriate temperature range.	1. Move the battery pack to a place where it is dry and the temperature is between 0°C (32°F) and 40°C (104°F).
The battery charger is not working.	1. The battery charger is over or under the appropriate temperature range. 2. The outlet that the battery charger is plugged into does not have power.	1. Unplug the battery charger and move it to a place where it is dry and the temperature is between 0°C (32°F) and 40°C (104°F). 2. Contact your licensed electrician to repair the outlet.
The tool does not run or run continuously.	1. There is moisture on the leads of the battery pack. 2. The battery is not fully installed in the tool. 3. The battery pack is low on charge.	1. Allow the battery pack to dry or wipe it dry. 2. Remove and then replace the battery in the tool, ensuring that it is fully installed and latched. 3. Charge the battery pack.
The battery pack shows only 3 LED indicators after only a few seconds of using a fully charged battery.	1. This is a normal occurrence.	1. Stop the tool and press the battery-charge-indicator button or the remove the battery from the tool to display the actual battery charge.
All 4 LED indicators are blinking on the battery pack after you press the battery-charge-indicator button on the battery pack and the current charge displays (when the battery pack is not in use).	1. The battery pack is over or under the appropriate temperature range.	1. Move the battery pack to a place where it is dry and the temperature is between 0°C (32°F) and 40°C (104°F).
All 4 LED indicators are blinking on the battery pack after releasing the trigger (when the battery pack is in use).	1. The battery pack is over or under the appropriate temperature range.	1. Move the battery pack to a place where it is dry and the temperature is between 0°C (32°F) and 40°C (104°F).
2 LED indicators are blinking on the battery pack after you press the battery-charge-indicator button on the battery pack and the current charge displays (when the battery pack is not in use).	1. There is a difference in voltage between cells in the battery pack.	1. Place the battery on the charger until it is fully charged.
2 LED indicators are blinking on the battery pack after releasing the trigger (when the battery pack is in use).	1. There is a difference in voltage between cells in the battery pack.	1. Place the battery on the charger until it is fully charged.
1 LED indicator is blinking on the battery pack.	1. The battery pack voltage is low.	1. Place the battery pack on the charger.
It is difficult to remove the battery pack from the tool.	1. The battery pack/tool is new or there is corrosion in the battery terminals and/or the terminals on the tool.	1. Clean the terminals on the battery pack and the tool. Then apply dielectric grease to the battery terminals; do not use any other type of lubricant as it can damage the terminals.
The speed lock does not hold when engaged.	1. The speed lock screw is loose.	1. Tighten the speed lock screw by turning the speed lock screw ¼ turn. If the speed lock still does not hold when engaged, turn the speed lock screw an additional ¼ turn.

European Privacy Notice

The Information Toro Collects
Toro Warranty Company (Toro) respects your privacy. In order to process your warranty claim and contact you in the event of a product recall, we ask you to share certain personal information with us, either directly or through your local Toro company or dealer.

The Toro warranty system is hosted on servers located within the United States where privacy law may not provide the same protection as applies in your country.

BY SHARING YOUR PERSONAL INFORMATION WITH US, YOU ARE CONSENTING TO THE PROCESSING OF YOUR PERSONAL INFORMATION AS DESCRIBED IN THIS PRIVACY NOTICE.

The Way Toro Uses Information
Toro may use your personal information to process warranty claims, to contact you in the event of a product recall and for any other purpose which we tell you about. Toro may share your information with Toro's affiliates, dealers or other business partners in connection with any of these activities. We will not sell your personal information to any other company. We reserve the right to disclose personal information in order to comply with applicable laws and with requests by the appropriate authorities, to operate our systems properly or for our own protection or that of other users.

Retention of your Personal Information
We will keep your personal information as long as we need it for the purposes for which it was originally collected or for other legitimate purposes (such as regulatory compliance), or as required by applicable law.

Toro's Commitment to Security of Your Personal Information
We take reasonable precautions in order to protect the security of your personal information. We also take steps to maintain the accuracy and current status of personal information.

Access and Correction of your Personal Information
If you would like to review or correct your personal information, please contact us by email at legal@toro.com.

Australian Consumer Law

Australian customers will find details relating to the Australian Consumer Law either inside the box or at your local Toro Dealer.