Form No. 3408-800 Rev C

TORO®

Count on it.

Operator's Manual

Power Plex™ 61cm 40V MAX Hedge Trimmer

Model No. 51136—Serial No. 317000001 and Up
Model No. 51136T—Serial No. 317000001 and Up

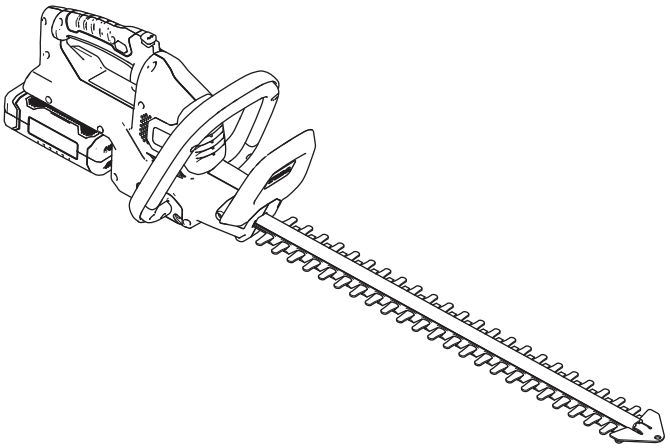

Register at www.Toro.com.
Original Instructions (EN)

CE

3408-800 C

Introduction

This hedge trimmer is intended to be used by residential homeowners to maintain bushes and hedges. It is designed to use only battery pack Models 88525 (provided with Model 51136) or 88526.

Read this information carefully to learn how to operate and maintain your product properly and to avoid injury and product damage. You are responsible for operating the product properly and safely.

You may contact Toro directly at www.Toro.com for product and accessory information, help finding a dealer, or to register your product.

Model 51136T does not include a battery or a charger.

Safety

WARNING: When using electric gardening appliances, always follow the basic safety precautions to reduce the risk of fire, electric shock, and personal injury, including the following:

⚠ WARNING

Failure to follow all warnings and instructions may result in electric shock, fire and/or serious injury.

Read all safety warnings and all instructions.

Save all warnings and instructions for future reference.

The term "power tool" in the warnings refers to your mains-operated (corded) power tool or battery-operated (cordless) power tool.

1. **Work area safety**
   - A. **Keep the work area clean and well lit.** *Cluttered or dark areas invite accidents.*
   - B. **Do not operate power tools in explosive atmospheres, such as in the presence of flammable liquids, gasses, or dust.** *Power tools create sparks, which may ignite the dust or fumes.*
   - C. **Keep children and bystanders away while operating a power tool.** *Distractions can cause you to lose control.*
   - D. **Avoid dangerous environments.** *Do not use appliances in damp or wet locations.*
2. **Personal safety**
   - A. **Stay alert; watch what you are doing and use common sense when operating a power tool. Do not use a power tool while you are tired or under the influence of drugs, alcohol, or medication.** *A moment of inattention while operating power tools may result in serious personal injury.*
   - B. **Use personal protective equipment. Always wear eye protection.** *Protective equipment such as a dust mask, non-skid safety shoes, a hard hat, or hearing protection used for appropriate conditions will reduce personal injuries.*
   - C. **Prevent unintentional starting. Ensure that the switch is in the OFF position before connecting to a power source and/or battery pack and picking up or carrying the tool.** *Carrying power tools with your finger on the switch or energizing power tools that have the switch on invites accidents.*

© 2018—The Toro® Company
8111 Lyndale Avenue South
Bloomington, MN 55420

Contact us at www.Toro.com.
Printed in China
All Rights Reserved

D. **Remove any adjusting key or wrench before turning on the power tool.** *A wrench or a key left attached to a rotating part of the power tool may result in personal injury.*

E. **Do not overreach. Keep proper footing and balance at all times.** *This enables better control of the power tool in unexpected situations.*

F. **Dress properly. Do not wear loose clothing or jewelry. Keep your hair tied back and your clothing and gloves away from moving parts.** *Loose clothes, jewelry, or long hair can be caught in moving parts.*

G. **If devices are provided for the connection of dust extraction and collection facilities, ensure that these are connected and properly used.** *Use of dust collection can reduce dust-related hazards.*

3. **Power tool use and care**

A. **Do not force the power tool. Use the correct power tool for your application.** *The correct power tool will do the job better and safer at the rate for which it was designed.*

B. **Do not use the power tool if the switch does not turn it on and off.** *Any power tool that cannot be controlled with the switch is dangerous and must be repaired.*

C. **Disconnect the plug from the power source and/or the battery pack from the power tool before making any adjustments, changing accessories, or storing power tools.** *Such preventive safety measures reduce the risk of starting the power tool accidentally.*

D. **Store idle power tools out of the reach of children and do not allow persons unfamiliar with the power tool or these instructions to operate the power tool.** *Power tools are dangerous in the hands of untrained users.*

E. **Maintain power tools. Check for misalignment or binding of moving parts, breakage of parts and any other condition that may affect the power tools operation. If damaged, have the power tool repaired before use.** *Many accidents are caused by poorly maintained power tools.*

F. **Keep cutting tools sharp and clean.** *Properly maintained cutting tools with sharp cutting edges are less likely to bind and are easier to control.*

G. **Use the power tool, accessories and tool bits etc. in accordance with these instructions, taking into account the working conditions and the work to be performed.** *Using the power tool for operations different from those intended could result in a hazardous situation.*

4. **Battery tool use and care**

A. **Charge only with the charger specified by the manufacturer.** *A charger that is suitable for 1 type of battery pack may create a risk of fire when used with another battery pack.*

B. **Use power tools only with specifically designated battery packs.** *Using any other battery packs may create a risk of injury and fire.*

C. **When battery pack is not in use, keep it away from other metal objects, such as paper clips, coins, keys, nails, screws, or other small metal objects that can make a connection from one terminal to another.** *Shorting the battery terminals together may cause burns or a fire.*

D. **Under abusive conditions, liquid may be ejected from the battery; avoid contact. If contact accidentally occurs, flush with water. If liquid contacts eyes, additionally seek medical help.** *Liquid ejected from the battery may cause irritation or burns.*

E. Charging time increases if the battery pack is not charged within the appropriate temperature range; refer to Specifications (page 8).

5. **Service**

Have your power tool serviced by a qualified repair person using only identical replacement parts. *This will ensure that the safety of the power tool is maintained.*

Hedge Trimmer Safety Warnings

- **Keep all parts of the body away from the cutter blade. Do not remove cut material or hold material to be cut when blades are moving. Make sure that the switch is off when clearing jammed material. The blades coast after you turn them off.** *A moment of inattention while operating the hedge trimmer may result in serious personal injury.*
- **Carry the hedge trimmer by the handle with the cutter blade stopped.** *Proper handling of the hedge trimmer reduces possible personal injury from the cutter blades.*

- **Hold the power tool by insulated gripping surfaces only, because the cutter blade may contact hidden wiring or its own cord.** *Cutter blades contacting a "live" wire may make exposed metal parts of the power tool "live" and could give you an electric shock.*
- **DANGER—Keep your hands away from blade.** *Contact with blade will result in serious personal injury.*

Additional Safety Warnings

- Keep hands and feet away from the cutting device at all times and especially when switching the product on.
- Do not try to grasp or remove trimmings when the product is running. Remove only trimmings when the product is switched off and disconnected from the power supply.
- Never hold the product by the guard.
- Always be sure of a safe and secure operating position while using the product.
- Never use the product while standing on steps or a ladder. Do not work over shoulder height.
- Always ensure the safety guard supplied is fitted before using the product. Never attempt to use an incomplete product or one fitted with an unauthorized modification.
- Check the cutting device regularly for damage, and if damaged, repair immediately.
- Do not overload the product.
- Check immediately if the product starts to vibrate abnormally. Excessive vibration can cause injury.
- Switch the product off when the cutting device is blocked. Disconnect it from power supply (i.e., remove the battery pack) and remove the blockage. Inspect the cutting device for damage before using the product again.
- Follow the maintenance and repair instructions for this product. Never carry out any modifications of the product. Information about maintenance and repair is provided in this instruction manual.
- Know how to stop the product quickly in an emergency.
- Do not expose the product to rain. Do not operate the product on a wet hedge.
- Use the product only in daylight or good artificial light.
- Check the hedge for foreign objects before operation (e.g., wire fences). Take care that the cutting device does not come into contact with wire or other metal objects.
- Hold the hedge trimmer properly (e.g., with both hands if 2 handles are provided). Loss of control can cause personal injury.

Additional Safety Warnings for the Charger

- This charger can be used by persons with reduced physical, sensory or mental capabilities or lack of experience and knowledge if they are supervised or instructed concerning using the charger safely and understand the hazards involved.
- Children shall not play with the charger.
- Cleaning and user maintenance shall not be made by children without supervision.
- If the supply cord is damaged, it must be replaced by the manufacturer, its service agent, or similarly qualified persons in order to avoid a hazard.
- Disconnect the charger from the power supply and allow it to cool down before cleaning, maintenance, storage, and transportation.
- Before using the charger, read all the instructions and cautionary markings on the charger and battery pack.
- The charger and battery pack supplied with it are specifically designed to work together. Use the charger only with the battery pack for this tool.
- Charge the battery pack indoors only as the charger is designed for indoor use only.
- Do not charge non-rechargeable batteries.
- Protect the charger against moisture and wet conditions. There is a danger of electric shock.
- Do not place any object on top of the charger as it could cause overheating. Do not place the charger near any heat source.
- Do not use an extension cord on the charger unless it is absolutely necessary. The use of an improper extension cord could cause the risk of fire, electric shock or electrocution.
- Do not use the charger if it has been subjected to a heavy knock, dropped or otherwise damaged in any way. Have the charger checked and repaired by an authorized service center.

Additional Safety Warnings for Battery Packs

- Do not attempt to charge the battery pack with any other charger than the one supplied. The charger and battery pack supplied with it are specifically designed to work together.
- To ensure the longest battery life and best performance, charge and store the battery pack only in temperatures that are within the appropriate range; refer to Specifications (page 8). Do not charge or store the battery pack in temperatures outside of the suggested range.
- Small leakage of liquid from the battery pack may occur under extreme usage or temperature conditions. However, if the outer seal is broken and this leakage comes into contact with your skin, wash the affected area quickly with water. If

the leakage gets in your eyes, flush your eyes with clean water for a minimum of 10 minutes and seek immediate medical attention.

- Never attempt to open the battery pack for any reason. If the plastic housing of the battery pack breaks open or cracks, immediately discontinue its use and do not recharge it.
- Do not store or carry a spare battery pack in a pocket or toolbox or any other place where it may come into contact with metal objects. The battery pack may short-circuit, causing damage to the battery pack, burns, or a fire.
- Do not pierce the battery with nails, strike the battery with a hammer, step on the battery, or otherwise subject it to strong impacts or shocks.
- Protect the battery pack against heat. Do not place the battery in direct sunlight or use or store the battery inside cars in hot weather. Doing so may cause the battery to generate heat, explode or ignite.
- Never try to charge a battery pack that is cracked or damaged in any other way. There is a danger of electric shock or electrocution.

SAVE THESE INSTRUCTIONS

Sound Pressure

This unit has a sound pressure level at the operator's ear of 82.3 dBA, with an Uncertainty Value (K) of 3 dBA.

The sound pressure level was determined according to the procedures outlined in EN ISO 11201.

Sound Power

This unit has a guaranteed sound power level of 95 dBA, which includes an Uncertainty Value (K) of 3 dBA.

The sound power level was determined according to the procedures outlined in EN ISO 11094.

Hand/Arm Vibration

Measured vibration level for right hand = 2.04 m/s^2

Measured vibration level for left hand = 1.83 m/s^2

Uncertainty Value (K) = 1.5 m/s^2

The measured values were determined according to the procedures outlined in EN ISO 20643.

Important: **The vibration emission during actual use of the power tool can differ from the declared total value depending on the way the tool is used. The operator should take safety measures based on an estimation of exposure in the actual conditions of use.**

Safety and Instructional Decals

Safety decals and instructions are easily visible to the operator and are located near any area of potential danger. Replace any decal that is damaged or missing.

Symbol	Designation/Explanation
	Read the instruction manual.
	Wear hearing protection.
	Wear eye protection.
	Wear a dust mask.
	Wear protective gloves.
	Wear protective, slip-resistant footwear.
	Do not expose the product to rain or wet conditions (moisture).
	Keep fingers away from moving cutting device.
Li-ion Li-ion	WEEE symbol. Waste electrical products should not be disposed of with household waste. Please recycle where facilities exist. Check with your Local Authority or local store for recycling advice.

decal136-2495

136-2495

1. Do not discard.

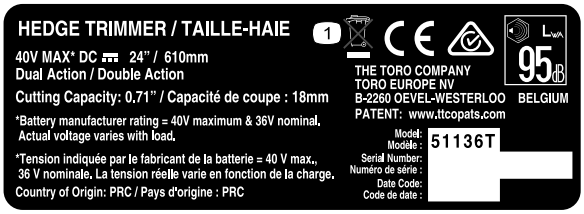

decal136-2496

136-2496

1. Do not discard.

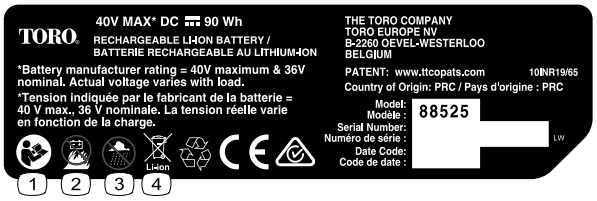

decal136-2499

136-2499

1. Read the *Operator's Manual*.
2. Do not burn the battery.
3. Do not operate in wet conditions.
4. Do not discard.

decal136-2501

136-2501

1. Do not discard.
2. Double insulated
3. Residential
4. Read the *Operator's Manual*.

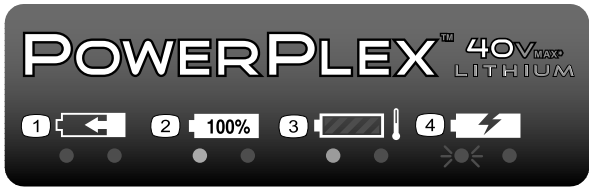

decal136-2504

136-2504

1. The battery pack is charging.
2. The battery pack is fully charged.
3. The battery pack is too warm.
4. The battery pack needs to be replaced.

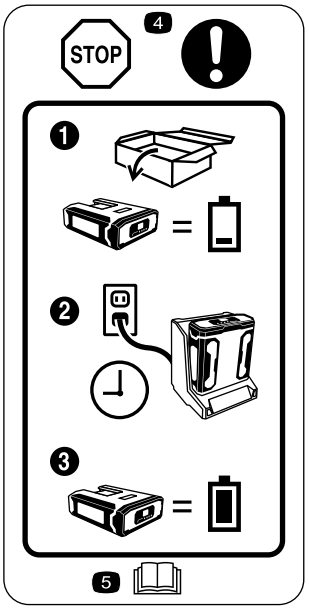

decal136-2534

136-2534

1. The battery does not come out of the box fully charged.
2. Place the battery in the battery charger.
3. Wait until the battery is fully charged before the first use.
4. Stop—follow these instructions before first use.
5. Read the *Operator's Manual*.

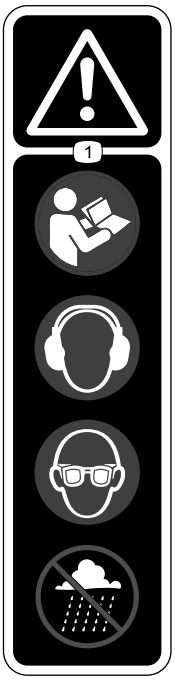

decal136-2537

136-2537

1. Warning—read the *Operator's Manual*; wear hearing protection; wear eye protection; do not operate in wet conditions.

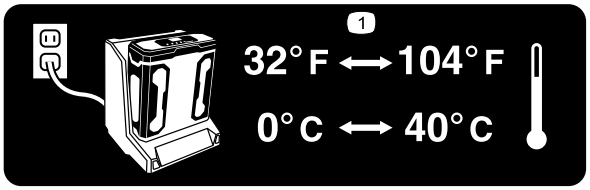

decal136-2539

136–2539

1. Charge the battery where the temperature is between 0°C and 40°C (32°F and 104°F).

Setup

Note: The battery pack is not fully charged when it is purchased. Before using the tool for the first time, refer to Charging the Battery Pack (page 10).

Mounting the Battery Charger (Optional)

If desired, mount the battery charger securely on a wall using the wall-mount key holes on the back of the unit.

Make sure to mount it indoors (such as a garage or other dry place), near a power outlet, and out of the reach of children.

Refer to Figure 1 for assistance in mounting the charger.

Note: Slide and twist the charger over the appropriately positioned hardware to secure the charger in place (hardware not included).

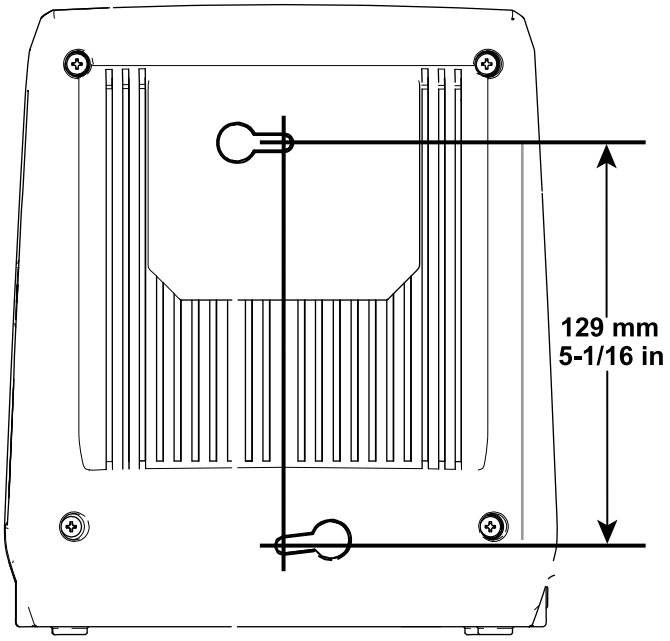

g194202

Figure 1

Product Overview

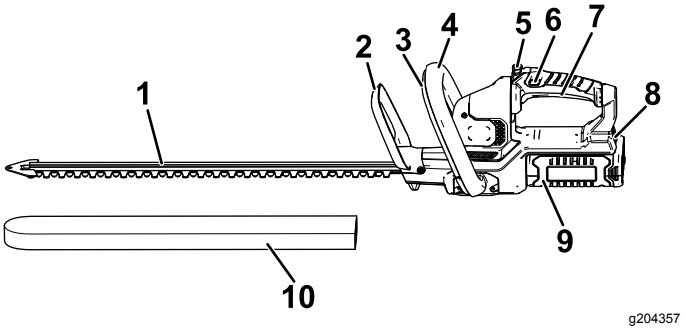

g204357

Figure 2

Left Side of Hedge Trimmer

1. Blades
2. Guard
3. Auxiliary-handle switch
4. Auxiliary handle
5. Handle-rotation button
6. Lock switch
7. Trigger
8. Battery latch
9. Battery pack
10. Protective cover

Specifications

Model	51136	51136T
Cutting Length	610 mm	610 mm
Rated Voltage	40 VDC maximum; 36 VDC nominal	
No-load Speed	3000 dual action spm at 40V maximum	
Cutting width	18 mm	
Charger Type	88527	
Battery Type	88525 (included with 51136), 88526 (sold separately)	

Weights

Mass of the machine without the battery	3.6 kg (8.0 lb)
Mass of the machine with battery 88525	4.6 kg (10.2 lb)
Mass of the machine with battery 88526	5.2 kg (11.5 lb)

Appropriate Temperature Ranges

Charge the battery at	0°C (32°F) to 40°C (104°F)*
Use products at	-15°C (5°F) to 60°C (140°F)
Store products at	-15°C (5°F) to 60°C (140°F)
Unplug the charger if	Below 0°C (32°F) or above 40°C (104°F)

*Charging time will increase if you do not charge the battery within this range.

Store the tool, battery pack and battery charger in an enclosed clean, dry area.

Operation

Starting the Hedge Trimmer

1. Remove the protective cover from the cutter blades (Figure 3).

⚠ WARNING

The hedge trimmer blades can cause cuts or amputation.

Be careful when handling the hedge trimmer with the protective cover removed.

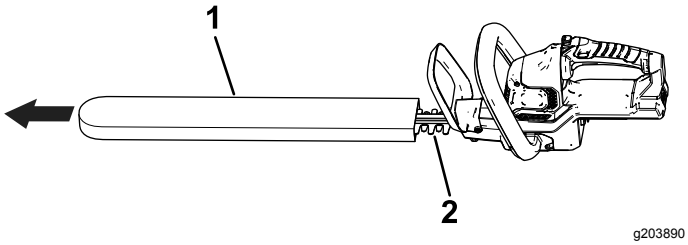

Figure 3

1. Protective cover
2. Blades

2. Make sure that the vents on the hedge trimmer are clear of any dust and debris.
3. Align the cavity of the battery pack with the tongue in the handle housing, grasp the handle, and push the battery pack into the handle until the latch locks into place (Figure 4).

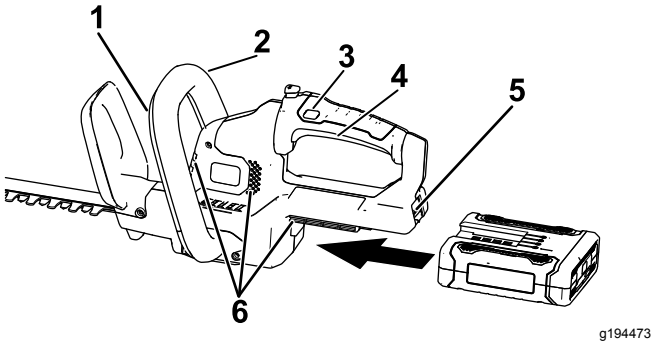

Figure 4

1. Auxiliary-handle switch
2. Auxiliary handle
3. Lock switch
4. Trigger
5. Battery latch
6. Hedge trimmer venting areas

4. Place 1 hand on the trigger handle. Place the other hand on the auxiliary handle (Figure 4).
5. Press the lock switch and then squeeze the trigger switch while engaging the auxiliary-handle switch to turn on the hedge trimmer (Figure 4).

The trimmer stays on as long as the auxiliary-handle switch is engaged and the trigger is squeezed. The lock switch may be released once the hedge trimmer is running (Figure 4).

Rotating the Hedge Trimmer Handle

1. Press and hold the rotational lock button (A of Figure 5).
2. Rotate the handle 90° to the right or left depending on desired cutting direction, then release the rotational lock button to lock the handle in the desired position (B of Figure 5).

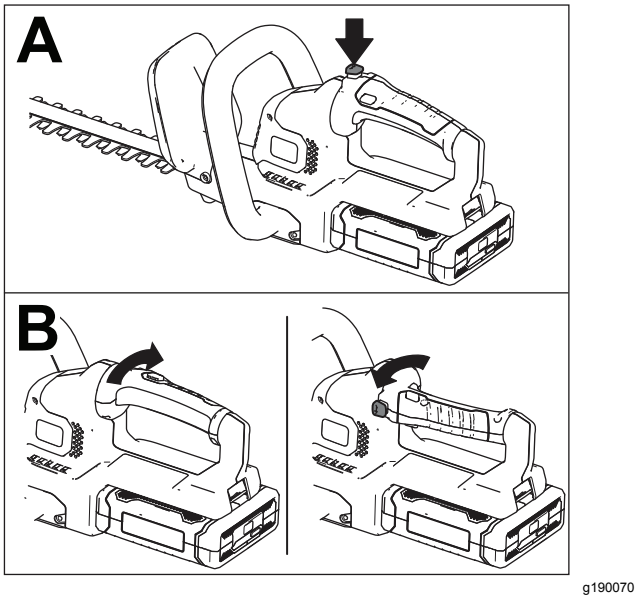

Figure 5

Stopping the Hedge Trimmer

1. Release the trigger or auxiliary-handle switch (Figure 4).
2. Allow at least 5 seconds for the cutting blade to stop moving.

Removing the Battery Pack

Press the battery latch on the tool to release the battery pack and slide the battery pack out of the tool (Figure 6).

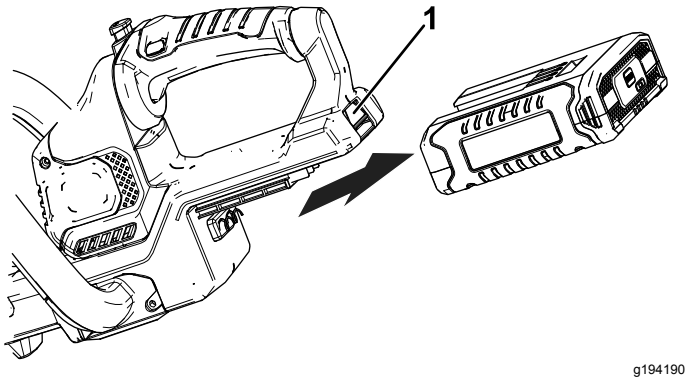

Figure 6

1. Battery latch

Charging the Battery Pack

Important: **Read all safety precautions.**

Important: **Charge the battery pack only in temperatures that are within the appropriate range; refer to Specifications (page 8).**

Note: At any time, press the battery-charge-indicator button on the battery pack to display the current charge (LED indicators).

1. Plug the power cord that matches your power outlets into the battery charger.
2. Make sure that the vents on the battery are clear of any dust and debris.
3. Line up the cavity in the battery pack (Figure 7) with the tongue on the charger.

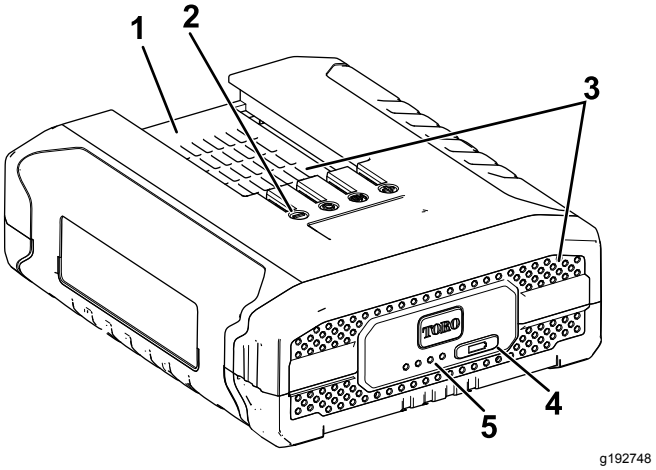

Figure 7

1. Battery pack cavity
2. Battery pack terminals
3. Battery pack venting areas
4. Battery-charge-indicator button
5. LED indicators (current charge)

4. Make sure that the vents on the battery charger are clear of any dust and debris.
5. Slide the battery pack into the charger until it is fully seated (Figure 8).

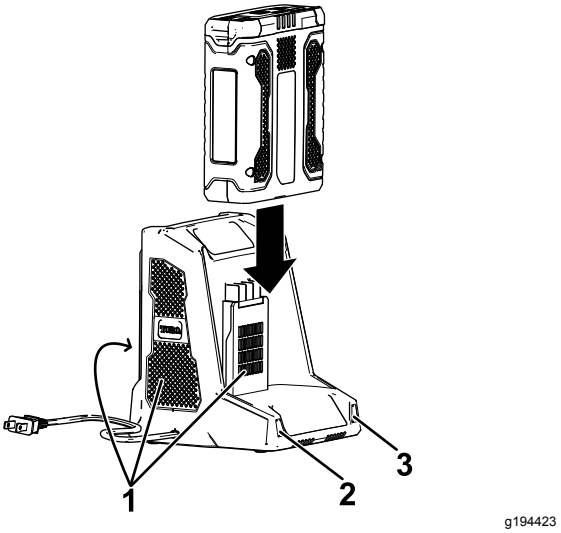

Figure 8

1. Charger venting areas
2. Left indicator light
3. Right indicator light

6. To remove the battery pack, slide the battery backward out of the charger.

7. Refer to the following table to interpret the LED indicators on the battery charger.

Left Light	Right Light	Indicates
Off	Red	Charger is on; no battery pack inserted
Red	Red	Battery pack is charging
Green	Red	Battery pack is charged
Orange	Red	Battery pack is too warm
Red Blinking	Red	Replace the battery pack

Operating Tips

- Use the power tool for cutting in either direction in a slow, sweeping action from side to side.
- Stand so that you are stable and balanced on both feet. Do not overreach.
- Inspect and clear the area of any hidden objects.
- Never use the hedge trimmer near power lines, fencing, posts, buildings, or other immovable objects.
- Never use a blade after hitting a hard object without first inspecting it for damage. Do not use if it is damaged.
- Never touch blades or service unit with the power supply connected.
- Do not force the hedge trimmer through heavy shrubbery. This can cause the blades to bind and slow down. If the blades slow down, reduce the pace.
- Do not attempt to cut stems or twigs that are larger than 18 mm (0.71 inch) in diameter, or those obviously too large to feed into the cutting blade. Use a non-powered hand saw or pruning saw to trim large stems.
- If blades do become jammed, stop the motor and remove the battery before attempting to remove the obstruction.
- If desired, you can use a string to help cut your hedge level. Decide how high you want the hedge. Stretch a piece of string along the hedge at the desired height. Trim the hedge just above the guide line of string.
- Wear gloves when trimming thorny or prickly growth. When trimming new growth, use a wide sweeping action so that the stems are fed directly into the cutting blade.

Maintenance

Disconnect the product from the power supply (i.e. remove the plug from the power supply or the battery pack) before maintenance or cleaning work.

Use only the manufacturer's recommended replacement parts and accessories.

Inspect and maintain the product regularly. Have the product repaired only by an authorized service center or similar qualified specialist.

Oiling the Trimmer Blade

Note: Oil the trimmer blade before and after each use.

1. Stop the motor and remove the battery.
2. Clean dirt and debris from the body of the hedge trimmer, using a damp cloth with a mild detergent.

   Note: Do not use any strong detergents on the plastic housing or the handle. They can be damaged by certain aromatic oils, such as pine and lemon, and by solvents such as kerosene.
3. Lay the hedge trimmer on a flat surface. Apply light-weight machine oil along the edge of the top blade. If you will be using the hedge trimmer for an extended period of time, oil the blade during use.

   Note: Do not oil the hedge trimmer while it is running.

Storage

Important: **Store the tool, battery pack, and charger only in temperatures that are within the appropriate range; refer to Specifications (page 8).**

Important: **If you are storing the tool for a year or longer, remove the battery pack from the tool and charge the battery pack until 2 or 3 LED indicators turn blue on the battery. Do not store a fully charged or fully depleted battery. When ready to use again, charge the battery pack until the left indicator light turns green on the charger or all 4 LED indicators turn blue on the battery.**

- Clean all foreign material from the product.
- Store the tool, battery pack, and battery charger in a well-ventilated place that is inaccessible to children.
- Keep the tool, battery pack, and battery charger away from corrosive agents such as garden chemicals and de-icing salts.
- To reduce the risk of serious personal injury, do not store the battery pack outside or in vehicles.
- Store the tool, battery pack, and battery charger in an enclosed clean, dry area.

Preparing the Battery Pack for Recycling

Important: **Upon removal, cover the terminals of the battery pack with heavy-duty adhesive tape. Do not attempt to destroy or disassemble the battery pack or remove any of its components. Lithium-ion battery packs must be recycled or disposed of properly at the nearest battery recycling facility.**

RECYCLE RBRC Li-ion 1.800.822.8837	For more information on recycling lithium-ion battery packs and to locate the battery recycling facility closest to you, visit www.Call2Recycle.org (US and Canada only). If you are located outside of the US and Canada, please contact your authorized Toro distributor.

Troubleshooting

Perform only the steps described in these instructions. All further inspection, maintenance, and repair work must be performed by an authorized service center or a similarly qualified specialist if you cannot solve the problem yourself.

Problem	Possible Cause	Corrective Action
The tool does not start.	1. The battery is not fully installed in the tool. 2. The battery pack is not charged. 3. The battery pack is damaged. 4. There is another electrical problem with the tool.	1. Remove and then replace the battery into the tool, making sure that it is fully installed and latched. 2. Remove the battery pack from the tool and charge it. 3. Replace the battery pack. 4. Contact an Authorized Service Dealer.
The tool does not reach full power.	1. The battery pack charge capacity is too low. 2. The air vents are blocked.	1. Remove the battery pack from the tool and fully charge the battery pack. 2. Clean the air vents.
The tool is producing excessive vibration or noise.	1. The blades are dull or damaged.	1. Contact an Authorized Service Dealer.
The battery pack loses charge quickly.	1. The battery pack is over or under the appropriate temperature range.	1. Move the battery pack to a place where it is dry and the temperature is between 0°C (32°F) and 40°C (104°F).
The battery charger is not working.	1. The battery charger is over or under the appropriate temperature range. 2. The outlet that the battery charger is plugged into does not have power.	1. Unplug the battery charger and move it to a place where it is dry and the temperature is between 0°C (32°F) and 40°C (104°F). 2. Contact your licensed electrician to repair the outlet.
The battery pack shows only 3 LED indicators after only a few seconds of using a fully charged battery.	1. This is a normal occurrence.	1. Stop the tool and press battery-charge-indicator button or the remove the battery from the tool to display the actual battery charge.
All 4 LED indicators are blinking on the battery pack after you press the battery-charge-indicator button on the battery pack and the current charge displays (when the battery pack is not in use).	1. The battery pack is over or under the appropriate temperature range.	1. Move the battery pack to a place where it is dry and the temperature is between 0°C (32°F) and 40°C (104°F).
All 4 LED indicators are blinking on the battery pack after releasing the trigger (when the battery pack is in use).	1. The battery pack is over or under the appropriate temperature range.	1. Move the battery pack to a place where it is dry and the temperature is between 0°C (32°F) and 40°C (104°F).
2 LED indicators are blinking on the battery pack after you press the battery-charge-indicator button on the battery pack and the current charge displays (when the battery pack is not in use).	1. There is a difference in voltage between cells in the battery pack.	1. Place the battery on the charger until it is fully charged.
2 LED indicators are blinking on the battery pack after releasing the trigger (when the battery pack is in use).	1. There is a difference in voltage between cells in the battery pack.	1. Place the battery on the charger until it is fully charged.

Problem	Possible Cause	Corrective Action
1 LED indicator is blinking on the battery pack.	1. The battery pack voltage is low.	1. Place the battery pack on the charger.
It is difficult to remove the battery pack from the tool.	1. The battery pack/tool is new or there is corrosion in the battery terminals and/or the terminals on the tool.	1. Clean the terminals on the battery pack and the tool. Then apply dielectric grease to the battery terminals; do not use any other type of lubricant as it can damage the terminals.

European Privacy Notice

The Information Toro Collects
Toro Warranty Company (Toro) respects your privacy. In order to process your warranty claim and contact you in the event of a product recall, we ask you to share certain personal information with us, either directly or through your local Toro company or dealer.

The Toro warranty system is hosted on servers located within the United States where privacy law may not provide the same protection as applies in your country.

BY SHARING YOUR PERSONAL INFORMATION WITH US, YOU ARE CONSENTING TO THE PROCESSING OF YOUR PERSONAL INFORMATION AS DESCRIBED IN THIS PRIVACY NOTICE.

The Way Toro Uses Information
Toro may use your personal information to process warranty claims, to contact you in the event of a product recall and for any other purpose which we tell you about. Toro may share your information with Toro's affiliates, dealers or other business partners in connection with any of these activities. We will not sell your personal information to any other company. We reserve the right to disclose personal information in order to comply with applicable laws and with requests by the appropriate authorities, to operate our systems properly or for our own protection or that of other users.

Retention of your Personal Information
We will keep your personal information as long as we need it for the purposes for which it was originally collected or for other legitimate purposes (such as regulatory compliance), or as required by applicable law.

Toro's Commitment to Security of Your Personal Information
We take reasonable precautions in order to protect the security of your personal information. We also take steps to maintain the accuracy and current status of personal information.

Access and Correction of your Personal Information
If you would like to review or correct your personal information, please contact us by email at legal@toro.com.

Australian Consumer Law

Australian customers will find details relating to the Australian Consumer Law either inside the box or at your local Toro Dealer.

The Toro Warranty and The Toro GTS Starting Guarantee

Conditions and Products Covered

The Toro Company and its affiliate, Toro Warranty Company, pursuant to an agreement between them, jointly promise to repair the Toro Product listed below if defective in materials or workmanship or if the Toro GTS (Guaranteed to Start) engine will not start on the first or second pull, provided the routine maintenance required in the *Operator's Manual* have been performed.

The following time periods apply from the original date of purchase:

Products	Warranty Period
Walk Power Mowers	
• Cast Deck	5 years Residential Use[2] 90 Days Commercial Use
—Engine	5 years GTS Guarantee, Residential Use[3]
—Battery	2 years
• Steel Deck	2 years Residential Use[2] 30 Days Commercial Use
—Engine	2 years GTS Guarantee, Residential Use[3]
TimeMaster Mowers	3 years Residential Use[2] 90 Days Commercial Use
• Engine	3 years GTS Guarantee, Residential Use[3]
• Battery	2 years
Electric Hand Held Products	
• Ultra Products	2 years Residential Use[2]
• Power Plex Products	3 years Residential Use[2]
—Battery	2 years
Electric Walk Power Mowers	No Warranty for Commercial Use
All Ride-On Units Below	
• Engine	See engine manufacturer's warranty[4]
• Battery	2 years Residential Use[2]
• Attachments	2 years Residential Use[2]
DH Lawn & Garden Tractors	2 years Residential Use[2] 30 Days Commercial Use
TimeCutter	3 years Residential Use[2] 30 Days Commercial Use
• Engine	3 years Residential Use[2] 2 years or 300 hours Commercial Use [5]
TimeCutter HD	3 years or 300 hours [5]
• Engine	3 years or 300 hours Commercial Use [5]

[1]Original Purchaser means the person who originally purchased the Toro Product.

[2]Residential use means use of the product on the same lot as your home. Use at more than one location is considered commercial use and the commercial use warranty would apply.

[3]The Toro GTS Starting Guarantee does not apply when the product is used commercially.

[4]Some engines used on Toro Products are warranted by the engine manufacturer.

[5]Whichever occurs first.

Warranty may be denied if the hour meter is disconnected, altered, or shows signs of being tampered with.

Owner Responsibilities

You must maintain your Toro Product by following the maintenance procedures described in the *Operator's Manual*. Such routine maintenance, whether performed by a dealer or by you, is at your expense.

Instructions for Obtaining Warranty Service

If you think that your Toro Product contains a defect in materials or workmanship, follow this procedure:

1. Contact your seller to arrange service of the product. If for any reason it is impossible for you to contact your seller, you may contact any Toro Authorized Distributor to arrange service. Visit http://www.toro.com/en-us/locator/pages/default.aspx to locate a Toro distributor in your area.
2. Bring the product and your proof of purchase (sales receipt) to the servicing outlet. If for any reason you are dissatisfied with the servicing outlet's analysis or with the assistance provided, contact us at:

   Toro Warranty Company
   Toro Customer Care Department, RLC Division
   8111 Lyndale Avenue South
   Bloomington, MN 55420-1196
   001–952–948–4707

Items and Conditions Not Covered

There is no other express warranty except for special emission system coverage and engine warranty coverage on some products. This express warranty does not cover the following:

- Cost of regular maintenance service or parts, such as filters, fuel, lubricants, oil changes, spark plugs, air filters, blade sharpening or worn blades, cable/linkage adjustments, or brake and clutch adjustments
- Components failing due to normal wear
- Any product or part which has been altered, misused, neglected, requires replacement, or repair due to accidents or lack of proper maintenance
- Pickup and delivery charges
- Repairs or attempted repairs by anyone other than an Authorized Toro Service Dealer
- Repairs necessary due to failure to follow recommended fuel procedure (consult *Operator's Manual* for more details)
  - Removing contaminants from the fuel system is not covered
  - Use of old fuel (more than one month old) or fuel which contains more than 10% ethanol or more that 15% MTBE
  - Failure to drain the fuel system prior to any period of non-use over one month
- Repairs or adjustments to correct starting difficulties due to the following:
  - Failure to follow proper maintenance procedures or recommended fuel procedure
  - Rotary mower blade striking an object
- Special operational conditions where starting may require more than two pulls:
  - First time starts after extended period of non-use over three months or seasonal storage
  - Cool temperature starts such as those found in early spring and late autumn
  - Improper starting procedures - if you are having difficulty starting your unit, please check the *Operator's Manual* to ensure that you are using the correct starting procedures. This can save an unnecessary visit to an Authorized Toro Service Dealer.

General Conditions

The purchaser is covered by the national laws of each country. The rights to which the purchaser is entitled with the support of these laws are not restricted by this warranty.