Form No. 3421-450 Rev A

TORO®

Count on it.

Operator's Manual

Full Weather Cab

LT SeriesTriple Turf Mower or Groundsmaster® 3400 Series Traction Unit

Model No. 02895—Serial No. 400000000 and Up

Register at www.Toro.com.
Original Instructions (EN)

CE

3421-450 A

This product complies with all relevant European directives. For details, please see the Declaration of Incorporation (DOI) at the back of this publication.

Introduction

This cab provides rollover protection (conforming to ISO:21299) and full weather protection. It is supplied complete with a heating and air conditioning system for operator comfort and to de-mist the windscreen and a sound-reduction kit to reduce operator noise levels.

Install the Suppressed Beacon Kit (Part 111-7134) when using this kit if an amber beacon is required.

Read this information carefully to learn how to operate and maintain your product properly and to avoid injury and product damage. You are responsible for operating the product properly and safely.

You may contact Toro directly at www.Toro.com for product safety and operation training materials, accessory information, help finding a dealer, or to register your product.

Whenever you need service, genuine Toro parts, or additional information, contact an Authorized Service Dealer or Toro Customer Service and have the model and serial numbers of your product ready. Figure 1 identifies the location of the model and serial numbers on the product. Write the numbers in the space provided.

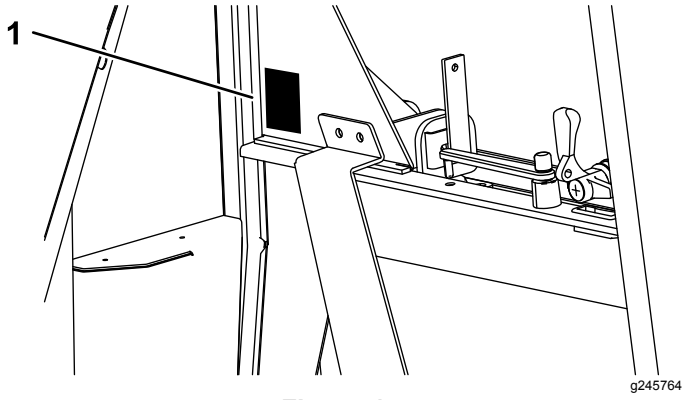

Figure 1

1. Model and serial number location

Model No. _____

Serial No. _____

This manual identifies potential hazards and has safety messages identified by the safety-alert symbol (Figure 2), which signals a hazard that may cause serious injury or death if you do not follow the recommended precautions.



Figure 2

1. Safety-alert symbol

This manual uses 2 words to highlight information. **Important** calls attention to special mechanical information and **Note** emphasizes general information worthy of special attention.

Contents

Safety 3
Maximum Slope Angles of Mowers with Cab 3
Safety and Instructional Decals 4
Product Overview 6
Controls 7
Specifications 8
Attachments/Accessories 9
Operation 9
Operating the Heating System 9
Using the Air Conditioner for the First Time 9
Operating the Air-Conditioning System 9
Operating the Screen Wiper and Washer 10
Filling the Screen Washer Bottle 10
Operating the Windows 10
Operating the Doors 10
Adjusting the Mirrors 11
Maintenance 12
Recommended Maintenance Schedule(s) 12
Checking the Refrigerant Pressure 13
Troubleshooting the Pressure Readings 13
Checking the Refrigerant Level 14
Checking the Compressor Magnetic Clutch 14
Checking the Drain Tube 14
Checking the Compressor-Fan Belt 15
Tilting the Cab 15
Locating the Fuses 17
Washing the Machine and Cab 18
Storage 18
Schematics 19

© 2018—The Toro® Company
8111 Lyndale Avenue South
Bloomington, MN 55420

Contact us at www.Toro.com.
Printed in the UK
All Rights Reserved

Safety

⚠ WARNING

If you do not follow certain safety procedures, someone could be seriously injured.

Before working on the machine, the following is essential:

- **You read the machine *Operator's Manual*.**
- **The engine is switched off and the key is removed.**
- **The parking brake is engaged.**
- **There is no pressure in the hydraulic system.**
- **The cutting units are down on the ground.**

⚠ WARNING

Working on the machine without the appropriate personal protection equipment increases your risk of injury.

When performing maintenance, always use the appropriate personal protection equipment.

⚠ WARNING

Working on the machine without the safety support bracket increases your risk of injury.

Before carrying out maintenance underneath the operator platform and cab, ensure that the safety support bracket is installed.

⚠ WARNING

The electrical system of the machine could shock you and cause personal injury.

Before working on the machine electrical systems, always disconnect the battery terminals (negative terminal first) and ensure that no contact is made between the terminals and metal parts of the machine.

Important: **Always wear the seat belt when the safety cab is installed.**

Important: **Refer to your machine *Operator's Manual* for advice and guidance when operating a mower on slopes.**

To ensure optimum performance and continued safety certification of the machine, use only genuine Toro replacement parts and accessories. Replacement parts and accessories made by other manufacturers could be dangerous, and such use could void the product warranty.

Maximum Slope Angles of Mowers with Cab

You can fit this cab to the mowers listed at the front of this document. When fitted with a cab, each mower model has a different maximum slope angle and this is stated on the decal located on the lid of the storage pod on the left of the machine. Refer to Safety and Instructional Decals (page 4) for the correct maximum slope angle decal for your machine when fitted with a cab.

Safety and Instructional Decals

Safety decals and instructions are easily visible to the operator and are located near any area of potential danger. Replace any decal that is damaged or missing.

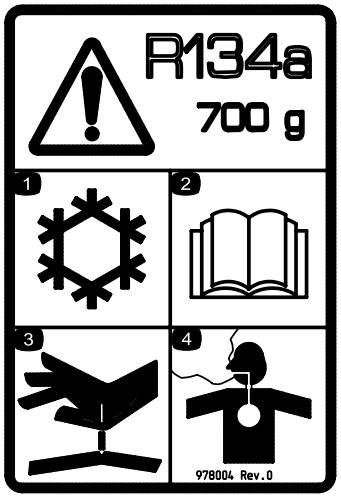

decal978004

978004

1. Cooling/air-conditioning system
2. Read the *Operator's Manual*.
3. High-pressure fluid—hazard of injection into the body
4. Poisonous fumes or toxic gases—asphyxiation hazard

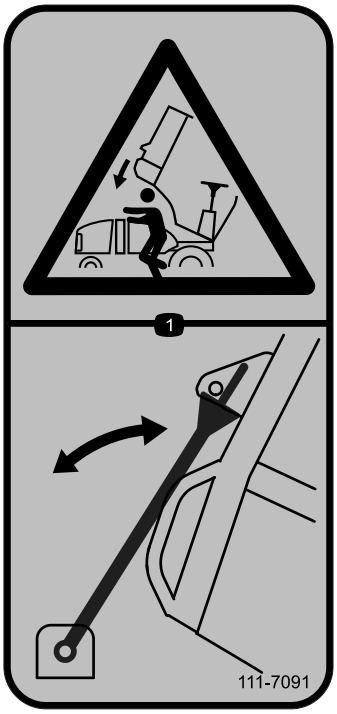

decal111-7091

111-7091

1. Crushing hazard—always use the hood stay.

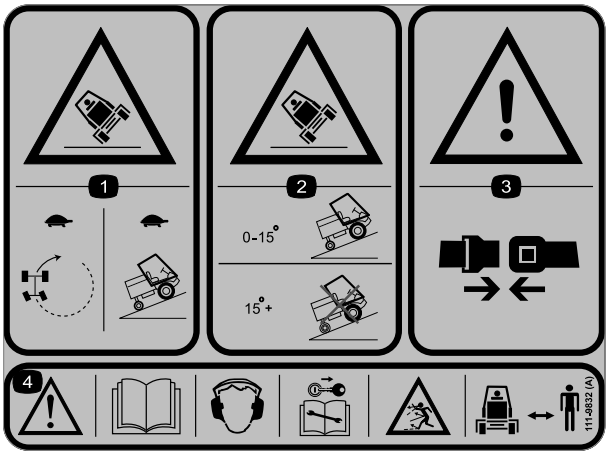

decal111-9832

111-9832

Groundsmaster 3400 (Model 30651) and LT-F3000 (Model 30659)

1. Tipping hazard—turn at slow speeds; drive on slopes at slow speeds.
2. Tipping hazard—operate on slopes of 15 degrees or less; do not operate on slopes greater than 15 degrees.
3. Warning—always wear a seatbelt.
4. Warning—read the *Operator's Manual*; wear hearing protection; remove the key from the ignition before performing maintenance; thrown object hazard—keep bystanders away from the machine.

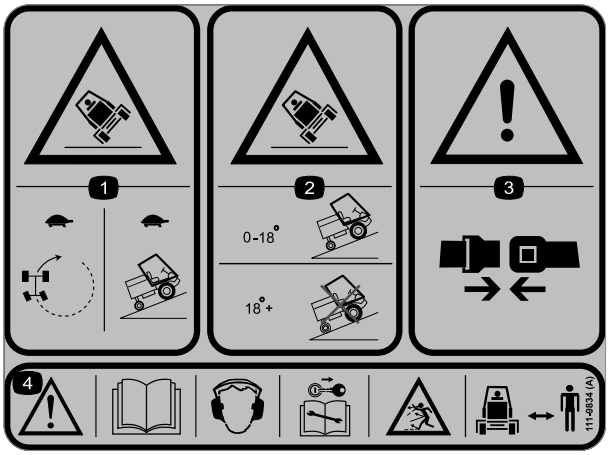

decal111-9834

111-9834

LT3340 (Model 30657)

1. Tipping hazard—turn at slow speeds; drive on slopes at slow speeds.
2. Tipping hazard—operate on slopes of 18 degrees or less; do not operate on slopes greater than 18 degrees.
3. Warning—always wear a seatbelt.
4. Warning—read the *Operator's Manual*; wear hearing protection; remove the key from the ignition before performing maintenance; thrown object hazard—keep bystanders away from the machine.

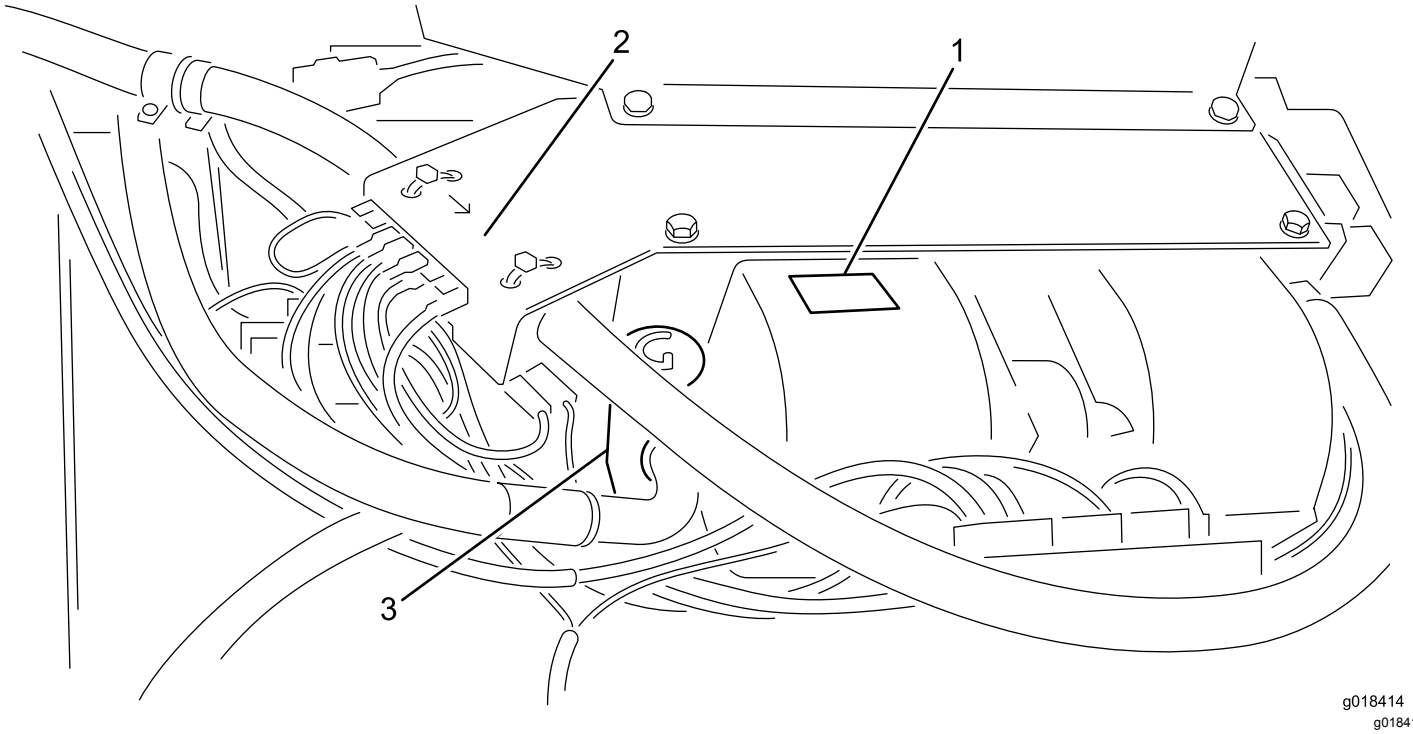

Figure 3

Evaporator, heater, and fans—mounted in front of the cab roof

1. Air conditioner: evaporator, heater, and double radial blower
2. Heater valve
3. Expansion valve

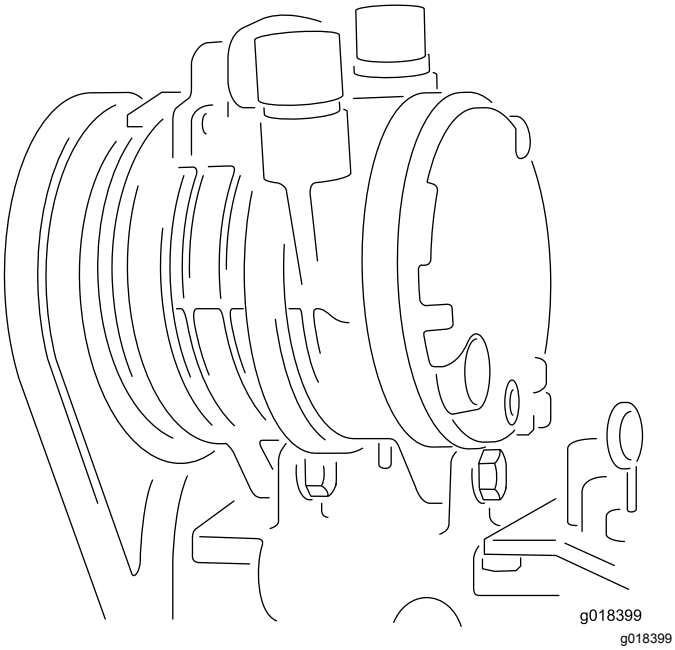

Figure 4

Compressor—mounted on the engine

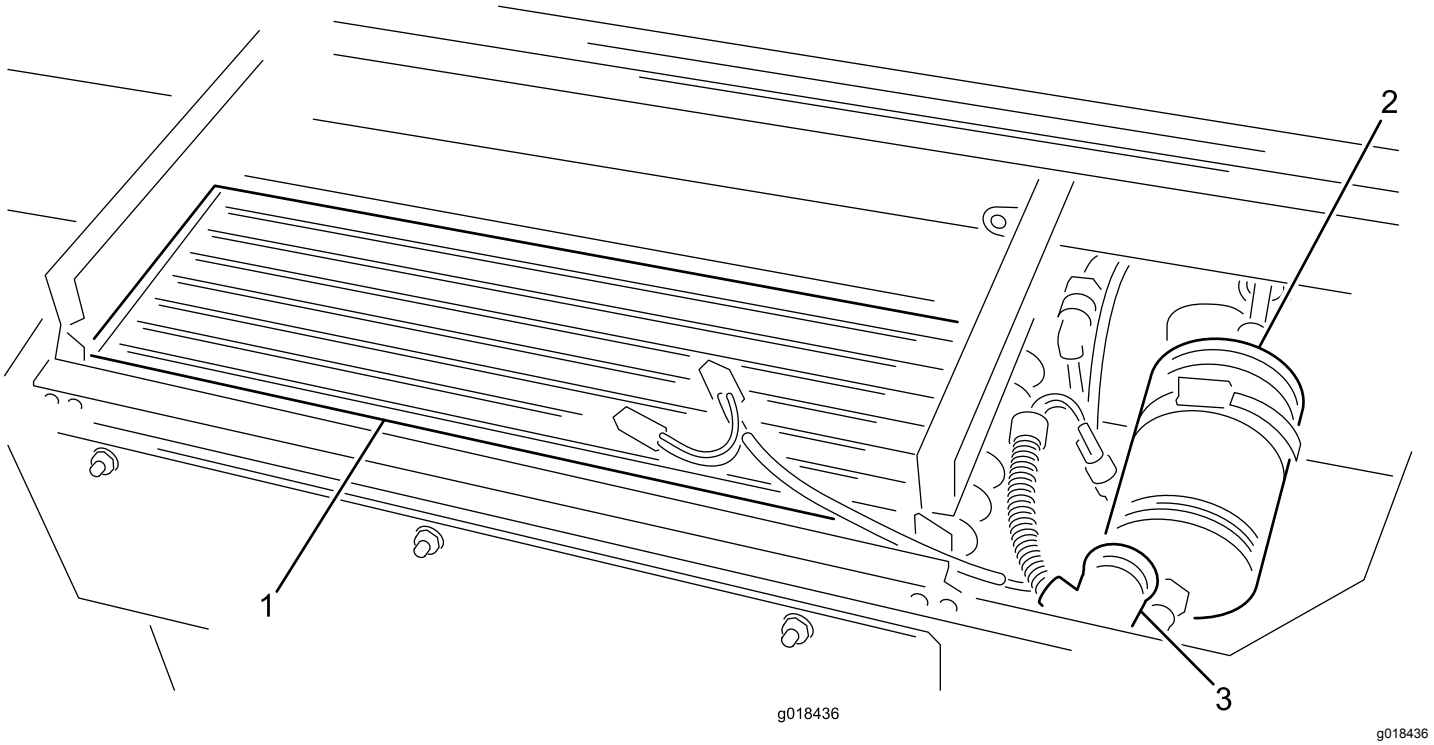

Figure 5

Condenser and dryer/filter—mounted in rear of the cab roof

1. Condenser
2. Dryer/filter
3. Pressure switch

Controls

Blower Controls

The controls are mounted on the right side in the roof lining.

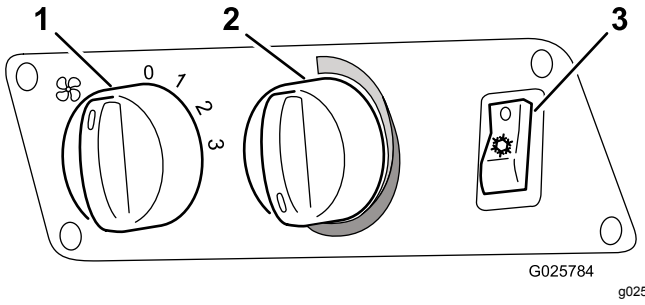

Figure 6

1. 3-position switch for radial-blower speed
2. Temperature controller
3. Air-conditioner switch

Screen Wiper and Washer Switch

The switch is mounted on the left side in the roof lining.

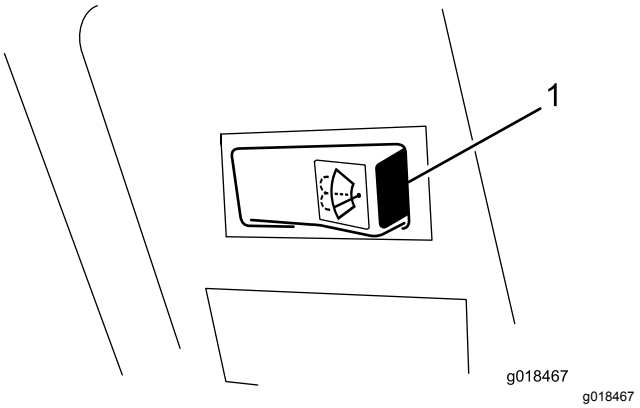

Figure 7

1. Screen wiper/washer switch

Interior Light Switch

Press the front of the interior light switch (Figure 8) to turn on the light. Press the rear of the switch to turn off the light.

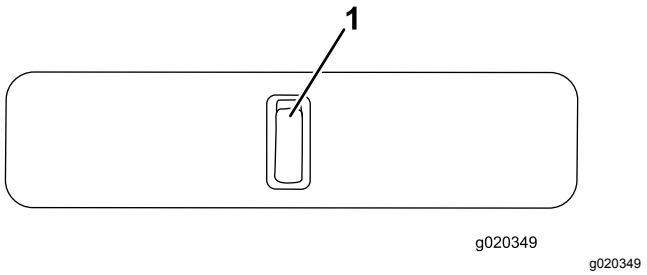

Figure 8

1. Interior light switch

Front Window Handle (2)

You can open the front window for ventilation. There are 2 handles (Figure 9).

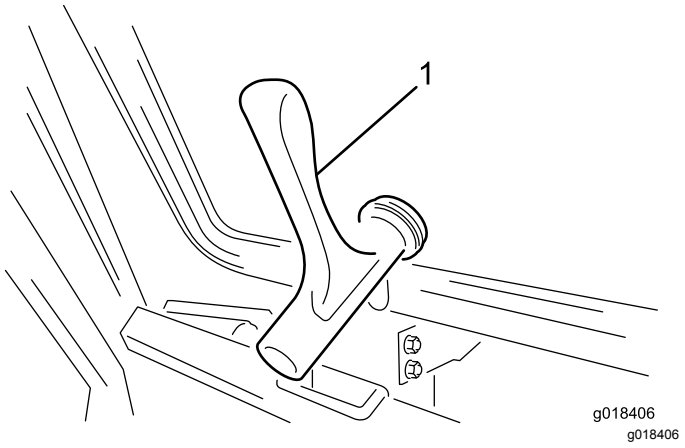

Figure 9

1. Front window handle

Rear Window Handle and Prop

You can open the rear window for ventilation. Rotate the rear window prop to hold the window open (Figure 10).

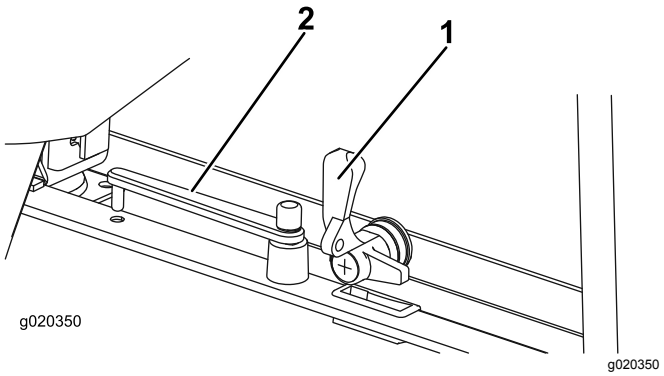

Figure 10

1. Rear window handle
2. Rear window prop

Specifications

Note: Specifications and design are subject to change without notice.

AIR CONDITIONER	
Cooling performance	4.2 kW
Refrigerant	R134A
Recommended quantity of refrigerant	850 g (1.87 lb)
Evaporator—volumetric air flow of the blower	660 m^3/h (23,307 ft^3/h)
ELECTRICAL	
Operating voltage	12 V
Fuse for radial blower / compressor	15 A
Fuse for axial blower	25 A
COMPRESSOR	
Designation	TM-08 HS
Direction of rotation (viewing the pulley)	clockwise
Operating speed	700 to 6000 rpm
Piston displacement	82 cm^3/rev (5 $inch^3/rev$)
Pressure-side connection	3/4 inch O-ring
Suction-side connection	7/8 inch O-ring
Magnetic clutch operating voltage	12 V
Magnetic clutch power consumption	0.45 W

Refrigerant oil	ZXL 100 PAG
Refrigerant oil volume in compressor	150 cm^3 (9.15 $inch^3$)
Refrigerant oil—additional required to fill air-conditioner system	25 cm^3 (1.53 $inch^3$)
Power consumption of air-conditioner system	2.5 kW

Attachments/Accessories

A selection of Toro approved attachments and accessories are available for use with the machine to enhance and expand its capabilities. Contact your Authorized Service Dealer or Distributor or go to www.Toro.com for a list of all approved attachments and accessories.

To ensure optimum performance and continued safety certification of the machine, use only genuine Toro replacement parts and accessories. Replacement parts and accessories made by other manufacturers could be dangerous, and such use could void the product warranty.

Operation

Note: Determine the left and right sides of the machine from the normal operating position.

Operating the Heating System

1. Set the air conditioner switch to Off.
2. Set the fan speed switch to the desired speed.
3. Set the temperature regulator to the required setting.
4. Rotate and angle the 2 air vents in the roof console to achieve the desired air direction.

Using the Air Conditioner for the First Time

1. Start the engine.
2. Switch on the blower switch (Figure 6).
3. Switch on the air-conditioning switch (Figure 6).
4. Set the temperature controller (Figure 6) to the maximum Cold setting (full counterclockwise direction).

   Note: After 3 minutes, the air-outlet louvers should emit cold air.
5. Adjust the fan speed and temperature control to achieve the required amount of cooling.

Operating the Air-Conditioning System

Do not run the air-conditioning system without running the engine as it will not function and the battery will be discharged.

To prevent premature failure of the compressor-shaft seals, run the air-conditioning system for 15 minutes every 14 days.

1. Set the switch to the On position.
2. Set the fan-speed switch to the desired speed.
3. Set the temperature regulator to the required setting.

   Note: The thermostat in the system switches the compressor on and off to maintain the set temperature.

Operating the Screen Wiper and Washer

1. Press the right side of the switch to start the screen wipers.
2. Press and hold the switch to operate the screen washers.
3. Press the left side of the switch to stop the screen wipers.

Filling the Screen Washer Bottle

Fill the bottle with clean water plus the recommended quantity of propriety windscreen washing fluid (Figure 11).

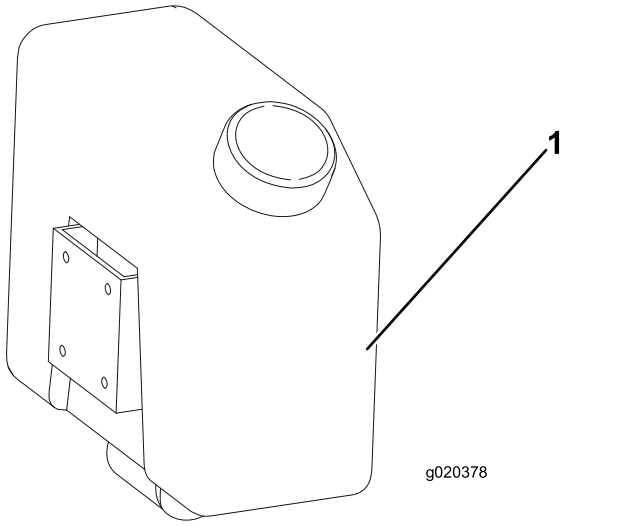

g020378

Figure 11

1. Screen washer bottle

⚠ WARNING

Failure to use washer fluid with antifreeze protection in cold weather could result in impaired windscreen vision and increase the risk of injury or accident.

If you operate your machine in temperatures below 5°C (40°F), use washer fluid with antifreeze protection.

Operating the Windows

Front Window

1. Rotate the handles counterclockwise and push the window open.
2. Rotate the handles clockwise to lock the window open.
3. To close the window, rotate the handles counterclockwise, pull the window closed, and rotate the handles clockwise to lock the window.

Rear Window

1. Unlock and open the rear window rotating the single handle counterclockwise.

   Note: The gas springs push the window fully open.
2. Rotate the window prop against the window handle to hold it open.
3. To close the rear window, rotate the prop away from the window, pull the window closed, and rotate the handle clockwise to lock the window.

Operating the Doors

To open the door from outside the cab, press the door latch handle knob while opening the door (Figure 12).

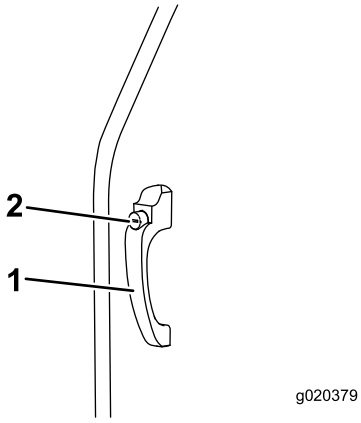

g020379

Figure 12

1. Door latch handle
2. Door latch knob

To open the door from inside the cab, pull back on the door lock release lever while opening the door (Figure 13).

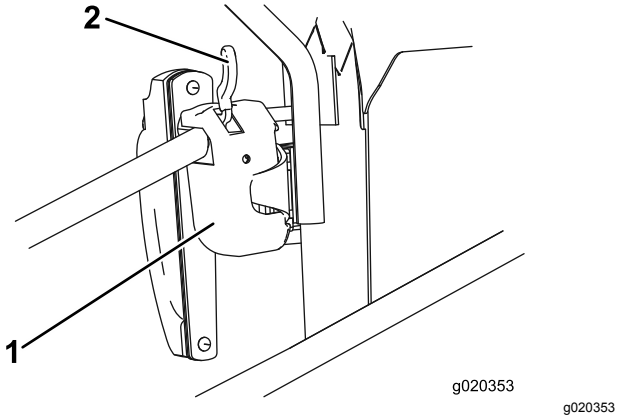

g020353

Figure 13

1. Door lock
2. Release lever

Adjusting the Mirrors

While the sitting in the seat, have a helper adjust the side-view mirrors to attain the best view around the side of the machine (Figure 14).

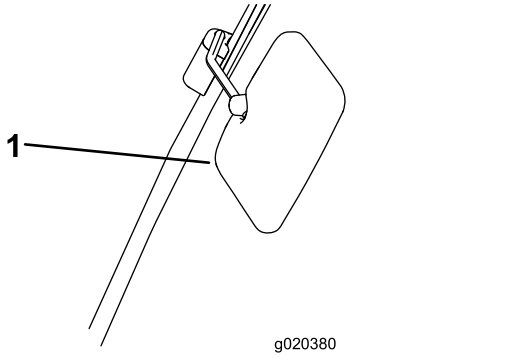

g020380

Figure 14

1. Side-view mirror

Maintenance

Note: Determine the left and right sides of the machine from the normal operating position.
For all maintenance procedures, park the machine on a level surface, shut off the engine, and remove the key.

Recommended Maintenance Schedule(s)

Maintenance Service Interval	Maintenance Procedure
After the first 100 hours	• Check all connections for tightness.
Every 50 hours	• Check the refrigerant level.
Every 250 hours	• Check the compressor magnetic clutch for correct operation. • Check the water drain for blockage, and clean it as necessary. • Examine and clean the condenser fins as necessary. • Examine the condition of the electrical cables. • Examine the condition and tightness of the electrical connectors.
Every 500 hours	• Check the compressor-fan belt condition and tension, and adjust it as necessary. • Examine the hose lines for abrasion and general condition. • Check all connections for leaks. • Examine the condition of the climatic unit in the cab roof, and check the parts for tightness. • Check the compressor brackets tightness of fittings.
Every 2 years	• Change the dryer/filter.

⚠ WARNING

Working on the machine without the safety support bracket increases your risk of injury.

Before carrying out maintenance underneath the operator platform and cab, ensure that the safety support bracket is installed.

⚠ CAUTION

If you leave the key in the ignition switch, someone could accidently start the engine and seriously injure you or other bystanders.

Remove the key from the ignition before you do any maintenance.

Important: **Maintenance or repairs on the heating system should be carried out by an Authorized Toro Distributor or a specialist in vehicle heating systems.**

Important: **All work on the refrigerant part of the air-conditioning system should be carried out by fully qualified personnel.**

- You can use the air-conditioning system for many months of the cutting season. Follow the regular prescribed maintenance to prolong the life of the system and ensure efficient operation. Failure to carry out the prescribed and documented maintenance could invalidate the warranty on the system and its components.
- Even if the air-conditioning system is used infrequently, follow the maintenance schedule, as aging and refrigerant loss can occur with time.
- Clean the condenser and evaporator fins with compressed air in the opposite direction of the normal air flow. If there is any buildup of greasy deposits, clean it with a non-abrasive soap solution.
- Low levels of refrigerant can reduce the efficiency of the air-conditioning unit.
- Extremely low levels can cause the low-pressure switch to shut down the system.

- To check the refrigerant level, there is an integrated sight glass in the collecting tank. After filling, run the system for 5 minutes to allow all air bubbles to be purged from the system. Check the level after this period and top up is necessary. The occasional air bubble can be accepted.

  Important: **Do not spill compressor oil on the vehicle surface. It can cause discoloration of vehicle paint and deterioration of acrylic or ABS plastic components.**
- When attaching the climatic hoses, oil the sealing rings with refrigerator oil.
- After removal of climatic hoses from the air-conditioner system, always replace the O-rings with new ones specified for refrigerant 134A.
- When tightening or loosening fittings, always use 2 wrenches to prevent the tubes from twisting.

Checking the Refrigerant Pressure

When using the air-conditioning system the operating pressure is different on the suction side and the pressure side of the compressor.

This pressure difference is influenced by the speed of the compressor, the inside temperature of the vehicle, the outside air temperature and the relative air humidity.

Pressures that differ from those in the table below indicate a possible fault in the system.

To check the pressures, set the compressor speed to 2000 rpm with an air temperature between 20 and 40 degrees C (68 and 104 degrees F). Operate the blower at position 3 (fastest speed setting).

System Refrigerant Pressures

Outside Temperature	Low-Pressure Side	High-Pressure Side
20° C (68° F)	1.7 to 2.1 bar (24.7 to 30.5 psi)	10 to 14 bar (145 to 203 psi)
25° C (77° F)	1.8 to 2.2 bar (26.1 to 31.9 psi)	12 to 16 bar (174 to 232 psi)
30° C (86° F)	1.9 to 2.3 bar (27.6 to 33.4 psi)	14 to 18 bar (203 to 261 psi)

Troubleshooting the Pressure Readings

During the compression test, deviations from the values in the table may be measured. Locating the cause can determine whether a part requires repair or replacement.

The following is a short list of some pressure deviation that may be measured and some possible causes.

- **Pressure on high-pressure manometer too high**
  - The air volume in the condenser is too small.
  - Refrigerant quantity is too high
  - The dryer/filter is blocked.
- **Pressure on high-pressure manometer is too low**
  - The refrigerant quantity is too low (check the sight glass).
  - The compressor speed is too low (check the drive belt for slip/tension).
  - There is a fault with the compressor.
- **Pressure on low-pressure manometer too high**
  - The expansion valve is incorrect.
  - The compressor speed is too low (check the drive belt for slip/tension).
  - There is a fault with the compressor.
- **Pressure on low-pressure manometer too low**
  - There is restriction in the suction or pressure hoses.
  - The expansion valve is incorrect.
  - The refrigerant quantity is too low (examine the sediment bowl).
  - The air volume in the evaporator is too small.

  Have a qualified person examine and repair all deviations in pressure from the values in the table.

Important: **Do not allow refrigerant to discharge into the atmosphere. Before opening or disconnecting parts from the refrigerant circuit, empty the refrigerant into a specified recycling bottle, and dispose of it correctly.**

Always use genuine Toro spare parts when repairing or servicing the air-conditioning system.

Checking the Refrigerant Level

Service Interval: Every 50 hours

Check the refrigerant to assure it is at the correct level for operation. As the level of the refrigerant lowers, more air bubbles can be seen passing through the sight glass. Low levels of refrigerant can reduce the efficiency of the air-conditioning unit. Extremely low levels can cause the low-pressure switch to shut down the system.

1. Using the sight gauge in the collecting tank, check on refrigerant level (Figure 15).

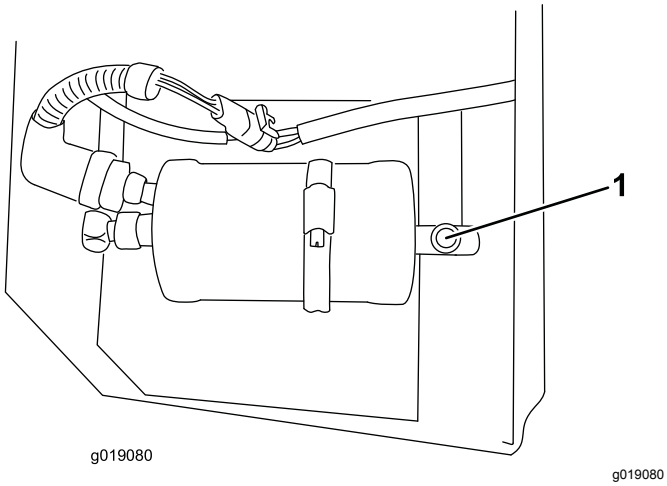

Figure 15

1. Refrigerant-level sight gauge

2. After filling, run the system for 5 minutes to allow all air bubbles to be purged from the system.
3. Check the level after this period and top up is necessary.

   Note: The occasional air bubble is acceptable.

Checking the Compressor Magnetic Clutch

Service Interval: Every 250 hours

The compressor magnetic clutch is operating correctly if it clicks when it is turned on (Figure 16).

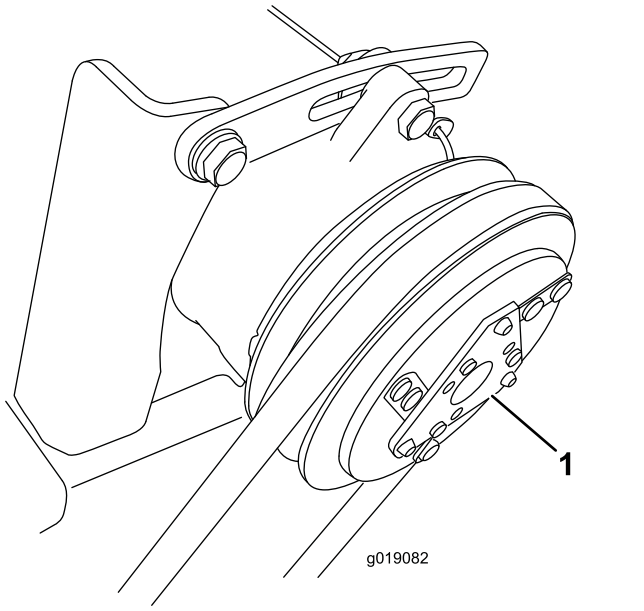

Figure 16

1. Compressor magnetic clutch

Checking the Drain Tube

Service Interval: Every 250 hours

The water drain is the clear plastic tube connected to the condenser. It runs from the condenser through the cab structure to below the front of the cab (Figure 17). Check the water drain for blockages and clean as necessary.

If the tube is blocked, use a flexible unblocking tool (pipe cleaner) or disconnect the tube and blow it out with compressed air.

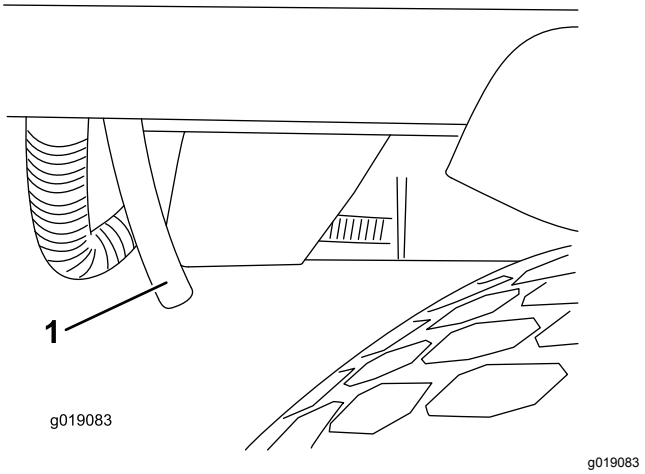

Figure 17

1. Drain tube

Note: If the blockage is not reachable with a flexible unblocking tool, the other end of the tube can be

disconnected and blown out with compressed air (Figure 18).

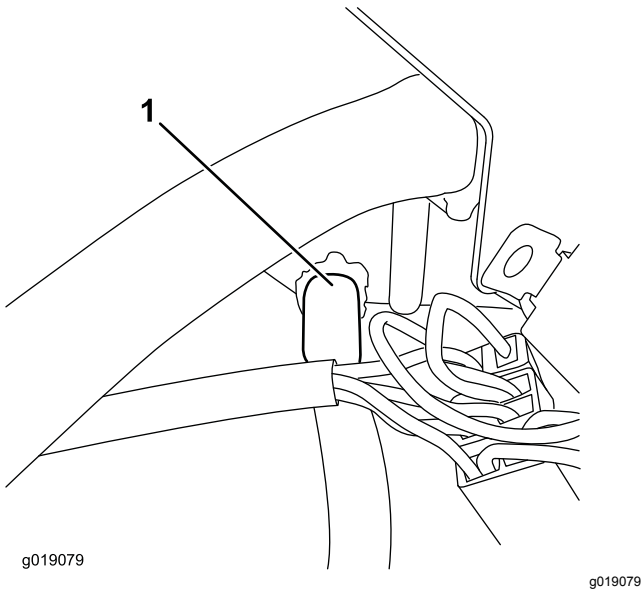

Figure 18

1. Disconnect the tube here.

Checking the Compressor-Fan Belt

Service Interval: Every 500 hours

1. Proper tension allows 10 mm (3/8 inch) deflection when applying a force of 40 N (9 lb) on the belt, midway between the pulleys.
2. If the deflection is not 10 mm (3/8 inch), loosen the upper and lower compressor-mounting bolts.

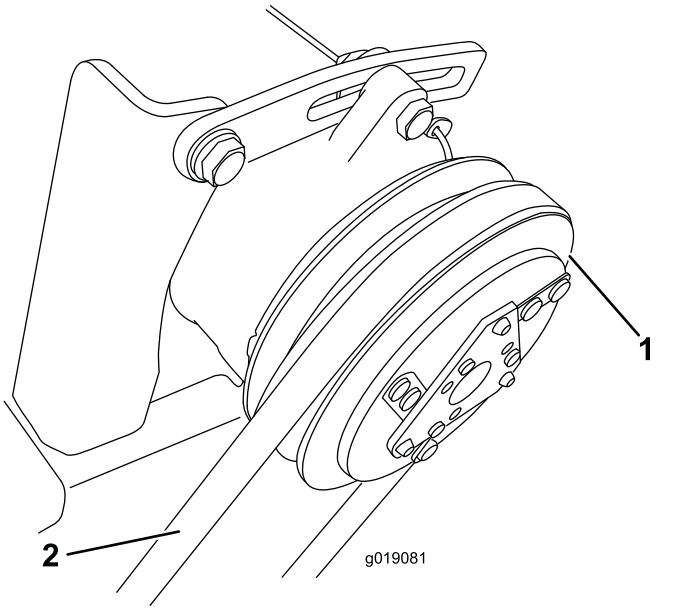

Figure 19

1. Compressor
2. Check the belt deflection here.

3. Increase or decrease the compressor-belt tension and tighten the bolts.
4. Check the deflection of the belt again to ensure that the tension is correct.

Tilting the Cab

You can tilt the cab for access under the operator platform for cleaning and maintenance.

The cab and the operator platform tilt together as a single unit. The angle of tilt is less than that of a platform without a cab. This is to ensure that, owing to the weight and position of the tilted cab, the machine has sufficient stability when the cab is tilted.

Tilting the Cab Upward

1. Remove the R-clips and rotate the 2 locking levers, located on the cross beam at the rear of the cab, so that they point upward (Figure 20).

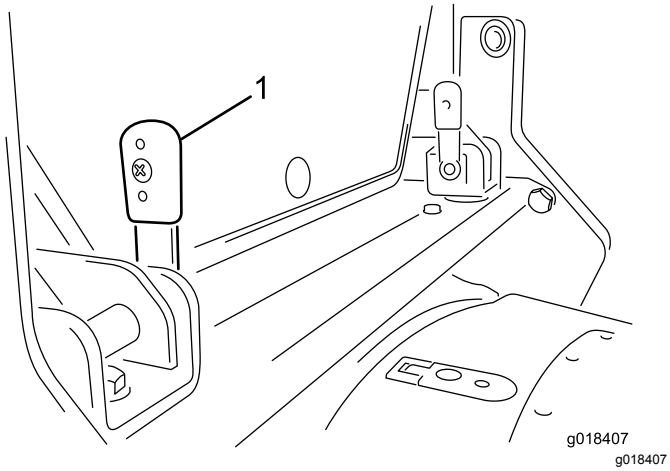

Figure 20

1. Locking lever (2)—rotated upward (vertical)

2. Slide the levers inward to remove them from the brackets.

   Note: If the levers are difficult to remove, align the locking pegs with the slots in the bracket and then remove the levers.

3. On both sides of the cab, on the rear corner post, there is a grab handle for raising the cab from either side. Lift up on 1 of these handles.

   Note: The built-in gas springs assist in raising the cab in a controlled manner and stop it when it is fully raised.

4. With the cab fully raised, install the safety support bracket as follows:

   A. Remove the safety support bracket from the storage pod.

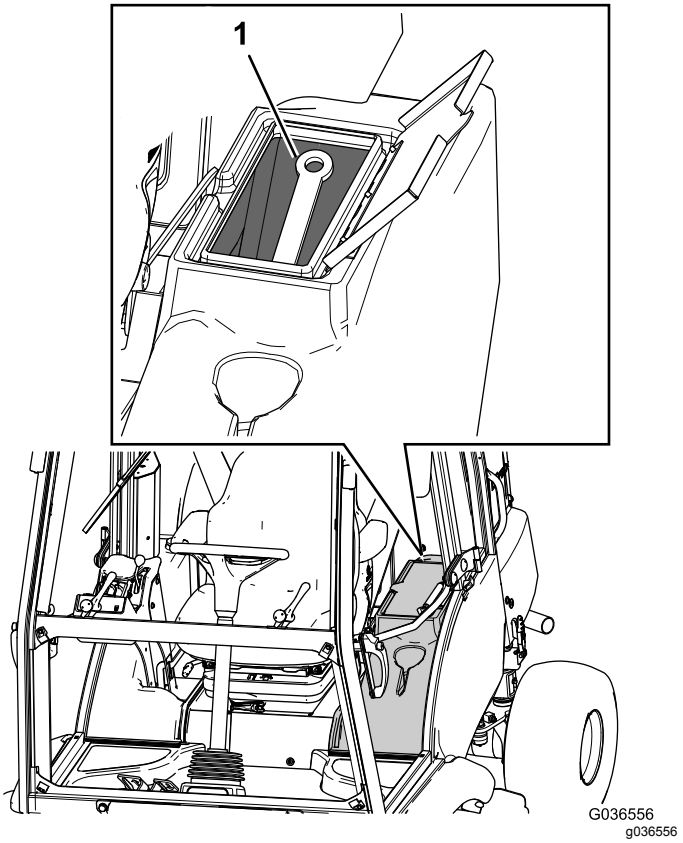

Figure 21

1. Safety support bracket

   B. Using either of the 2 cross-beam brackets, place the safety support bracket within the cross-beam brackets and insert the appropriate locking lever through both brackets and rotate it downward.

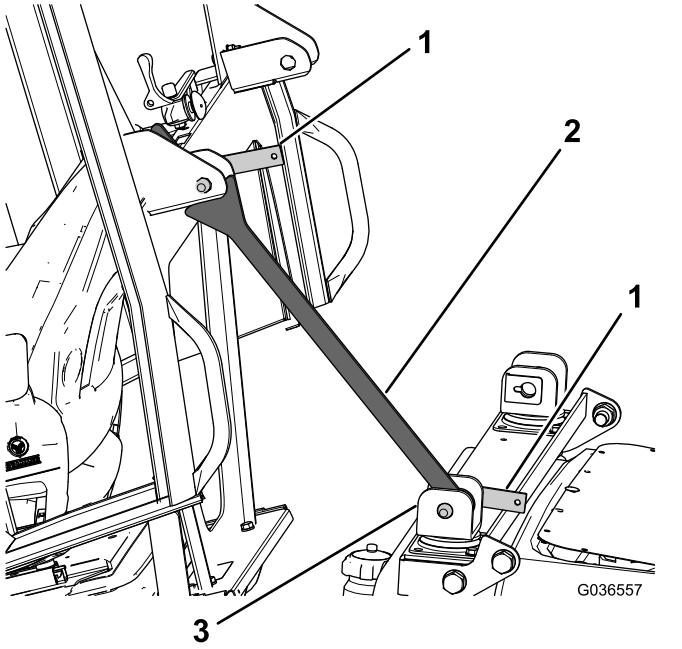

Figure 22

1. Locking lever
2. Safety support bracket
3. Cross-beam bracket

C. Once the safety support bracket is secured, rotated the cross-beam bracket toward the cab so that it rests against the bracket on the rear of the cab (Figure 22).

D. Insert the remaining locking lever through the top bracket to ensure that the safety support bracket stays in place (Figure 22).

Lowering the Cab

1. Remove the safety support bracket as follows:
   A. Remove the 2 locking levers securing the safety support bracket to the cross-beam brackets.
   B. Remove the safety support bracket from the cross-beam bracket.
   C. Place the safety support bracket in the storage pod (Figure 21).
2. Pull down on 1 of the grab handles to lower the cab so that the brackets on the rear of the cab align between the brackets on the cross beam.
3. With the levers in the vertical position (Figure 20), push them through the sets of brackets.

   Note: Move the levers back and forth into the brackets to align the locking pegs in the slots.
4. When the levers are fully inserted, rotate them backward to lock them in position (Figure 23).

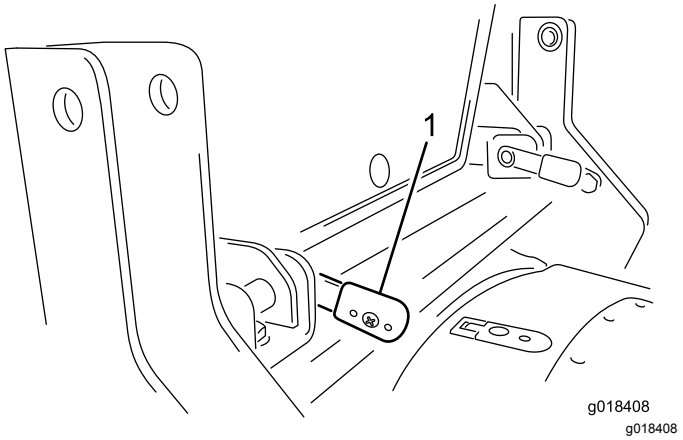

Figure 23

1. Locking lever (2)—rotated downward (horizontal)

5. Install the R-clips.

Locating the Fuses

The cab fuses are located in the fuse box in the cab headliner (Figure 24).

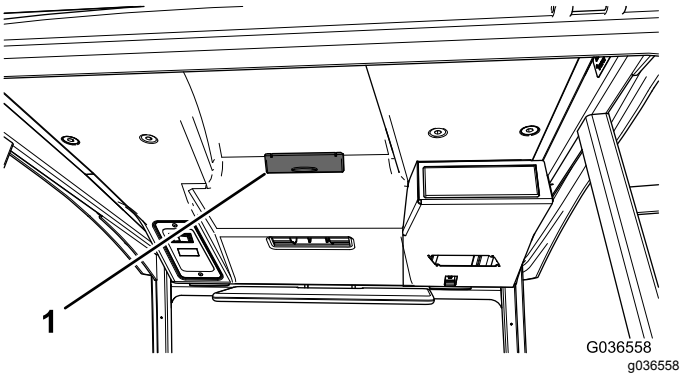

Figure 24

1. Cab fuse box

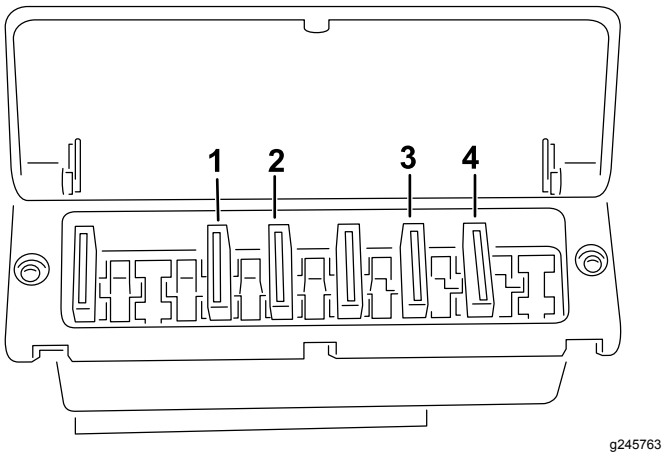

Figure 25

1. 25 A
2. 15 A
3. 5 A
4. 5 A

Washing the Machine and Cab

When washing the machine and the cab, do not direct water into the roof area.

Storage

Refer to the traction unit *Operator's Manual* for details on storing the machine.

Schematics

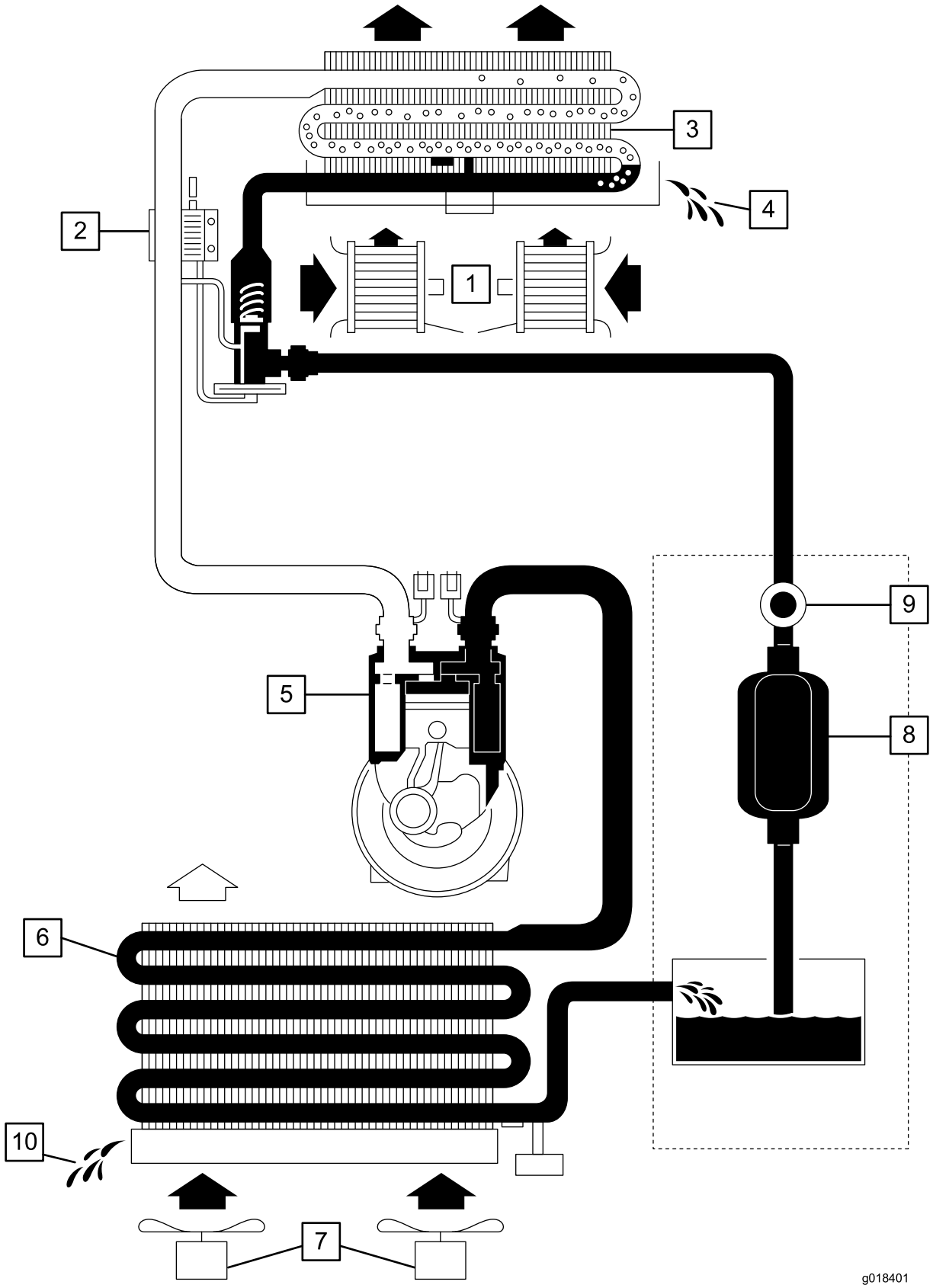

g018401

1	Radial blower
2	Expansion valve
3	Evaporator (combined with heat exchanger for heating)
4	Condenser—water
5	Compressor
6	Condenser
7	Axial fans
8	Dryer/filter
9	Sight glass
10	Drain

Functional schematic of the air-conditioning system (Rev. n/a)

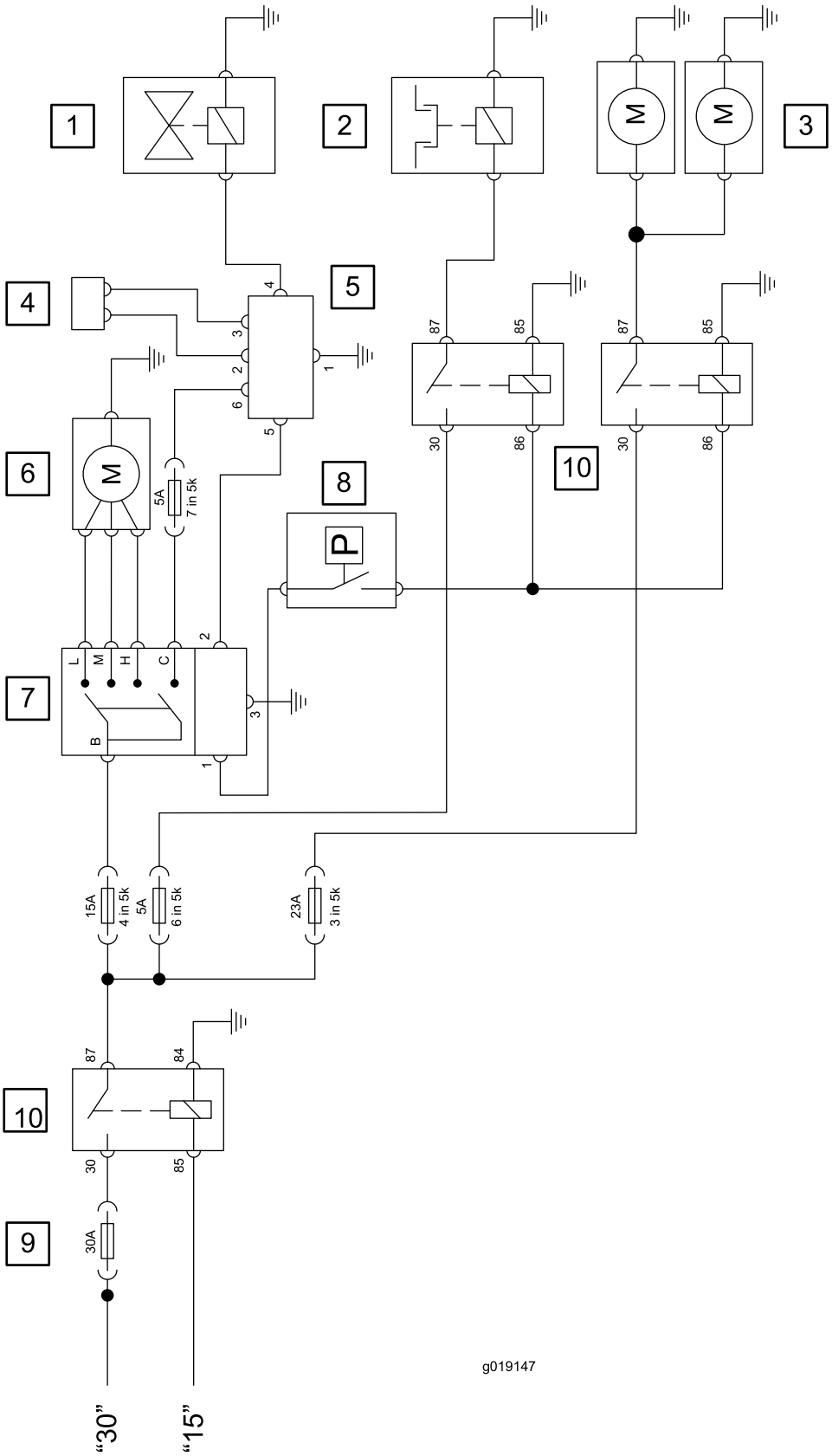
1
2
3
4
5
6
7
8
9
10
10
M
M
M
P
L
M
H
C
B
5A
7 in 5k
15A
4 in 5k
5A
6 in 5k
23A
3 in 5k
30A
87
85
30
86
84
"30"
"15"
g019147

g019147

1	Heating valve
2	Compressor with magnetic clutch
3	Twin axial fans
4	Temperature sensor
5	Electronic regulator
6	Radial blower fan
7	Blower-speed switch
8	Pressure switch
9	Main fuse in engine compartment
10	Relay

Electrical schematic of the air-conditioning system (Rev. n/a)

Notes:

Notes:

Notes:

Declaration of Incorporation

The Toro Company, 8111 Lyndale Ave. South, Bloomington, MN, USA declares that the following unit(s) conform(s) to the directives listed, when installed in accordance with the accompanying instructions onto certain Toro models as indicated on the relevant Declarations of Conformity.

Model No.	Serial No.	Product Description	Invoice Description	General Description	Directive
02895	400000000 and Up	Full Weather Cab, LT Series Triple Turf Mower or Groundsmaster 3400 Series Traction Unit	CAB W/ AIR-CONDITIONER	Cab	2014/30/EU 2006/42/EC

Relevant technical documentation has been compiled as required per Part B of Annex VII of 2006/42/EC.

We will undertake to transmit, in response to requests by national authorities, relevant information on this partly completed machinery. The method of transmission shall be electronic transmittal.

This machinery shall not be put into service until incorporated into approved Toro models as indicated on the associated Declaration of Conformity and in accordance with all instructions, whereby it can be declared in conformity with all relevant Directives.

Certified:



John Heckel
Sr. Engineering Manager
8111 Lyndale Ave. South
Bloomington, MN 55420, USA
January 22, 2018

Authorized Representative:

Marcel Dutrieux
Manager European Product Integrity
Toro Europe NV
Nijverheidsstraat 5
2260 Oevel
Belgium

Tel. +32 16 386 659

European Privacy Notice

The Information Toro Collects
Toro Warranty Company (Toro) respects your privacy. In order to process your warranty claim and contact you in the event of a product recall, we ask you to share certain personal information with us, either directly or through your local Toro company or dealer.

The Toro warranty system is hosted on servers located within the United States where privacy law may not provide the same protection as applies in your country.

BY SHARING YOUR PERSONAL INFORMATION WITH US, YOU ARE CONSENTING TO THE PROCESSING OF YOUR PERSONAL INFORMATION AS DESCRIBED IN THIS PRIVACY NOTICE.

The Way Toro Uses Information
Toro may use your personal information to process warranty claims, to contact you in the event of a product recall and for any other purpose which we tell you about. Toro may share your information with Toro's affiliates, dealers or other business partners in connection with any of these activities. We will not sell your personal information to any other company. We reserve the right to disclose personal information in order to comply with applicable laws and with requests by the appropriate authorities, to operate our systems properly or for our own protection or that of other users.

Retention of your Personal Information
We will keep your personal information as long as we need it for the purposes for which it was originally collected or for other legitimate purposes (such as regulatory compliance), or as required by applicable law.

Toro's Commitment to Security of Your Personal Information
We take reasonable precautions in order to protect the security of your personal information. We also take steps to maintain the accuracy and current status of personal information.

Access and Correction of your Personal Information
If you would like to review or correct your personal information, please contact us by email at legal@toro.com.

Australian Consumer Law

Australian customers will find details relating to the Australian Consumer Law either inside the box or at your local Toro Dealer.

The Toro Total Coverage Guarantee

A Limited Warranty

Conditions and Products Covered

The Toro® Company and its affiliate, Toro Warranty Company, pursuant to an agreement between them, jointly warrant your Toro Commercial product ("Product") to be free from defects in materials or workmanship for two years or 1500 operational hours*, whichever occurs first. This warranty is applicable to all products with the exception of Aerators (refer to separate warranty statements for these products). Where a warrantable condition exists, we will repair the Product at no cost to you including diagnostics, labor, parts, and transportation. This warranty begins on the date the Product is delivered to the original retail purchaser.
* Product equipped with an hour meter.

Instructions for Obtaining Warranty Service

You are responsible for notifying the Commercial Products Distributor or Authorized Commercial Products Dealer from whom you purchased the Product as soon as you believe a warrantable condition exists. If you need help locating a Commercial Products Distributor or Authorized Dealer, or if you have questions regarding your warranty rights or responsibilities, you may contact us at:

Commercial Products Service Department
Toro Warranty Company
8111 Lyndale Avenue South
Bloomington, MN 55420-1196
E-mail: commercial.warranty@toro.com

Owner Responsibilities

As the Product owner, you are responsible for required maintenance and adjustments stated in your Operator's Manual. Failure to perform required maintenance and adjustments can be grounds for disallowing a warranty claim.

Items and Conditions Not Covered

Not all product failures or malfunctions that occur during the warranty period are defects in materials or workmanship. This warranty does not cover the following:

- Product failures which result from the use of non-Toro replacement parts, or from installation and use of add-on, or modified non-Toro branded accessories and products. A separate warranty may be provided by the manufacturer of these items.
- Product failures which result from failure to perform recommended maintenance and/or adjustments. Failure to properly maintain your Toro product per the Recommended Maintenance listed in the *Operator's Manual* can result in claims for warranty being denied.
- Product failures which result from operating the Product in an abusive, negligent or reckless manner.
- Parts subject to consumption through use unless found to be defective. Examples of parts which are consumed, or used up, during normal Product operation include, but are not limited to, brakes pads and linings, clutch linings, blades, reels, bed knives, tines, castor wheels, tires, filters, belts, and certain sprayer components such as diaphragms, nozzles, and check valves, etc.
- Failures caused by outside influence. Items considered to be outside influence include, but are not limited to, weather, storage practices, contamination, use of unapproved coolants, lubricants, additives, fertilizers, water, or chemicals, etc.
- Normal noise, vibration, wear and tear, and deterioration.
- Normal "wear and tear" includes, but is not limited to, damage to seats due to wear or abrasion, worn painted surfaces, scratched decals or windows, etc.

Parts

Parts scheduled for replacement as required maintenance are warranted for the period of time up to the scheduled replacement time for that part. Parts replaced under this warranty are covered for the duration of the original product warranty and become the property of Toro. Toro will make the final decision whether to repair any existing part or assembly or replace it. Toro may use remanufactured parts for warranty repairs.

Note Regarding Deep Cycle Battery Warranty:

Deep cycle batteries have a specified total number of kilowatt-hours they can deliver during their lifetime. Operating, recharging, and maintenance techniques can extend or reduce total battery life. As the batteries in this product are consumed, the amount of useful work between charging intervals will slowly decrease until the battery is completely worn out. Replacement of worn out batteries, due to normal consumption, is the responsibility of the product owner. Battery replacement may be required during the normal product warranty period at owner's expense.

Maintenance is at Owner's Expense

Engine tune-up, lubrication cleaning and polishing, replacement of Items and Conditions Not Covered filters, coolant, and completing Recommended Maintenance are some of the normal services Toro products require that are at the owner's expense.

General Conditions

Repair by an Authorized Toro Distributor or Dealer is your sole remedy under this warranty.

Neither The Toro Company nor Toro Warranty Company is liable for indirect, incidental or consequential damages in connection with the use of the Toro Products covered by this warranty, including any cost or expense of providing substitute equipment or service during reasonable periods of malfunction or non-use pending completion of repairs under this warranty. Except for the Emissions warranty referenced below, if applicable, there is no other express warranty.

All implied warranties of merchantability and fitness for use are limited to the duration of this express warranty. Some states do not allow exclusions of incidental or consequential damages, or limitations on how long an implied warranty lasts, so the above exclusions and limitations may not apply to you.

This warranty gives you specific legal rights, and you may also have other rights which vary from state to state.

Countries Other than the United States or Canada

Customers should contact their Toro Distributor (Dealer) to obtain guarantee policies for your country, province, or state. If for any reason you are dissatisfied with your Distributor's service or have difficulty obtaining guarantee information, contact the Toro importer. If all other remedies fail, you may contact us at Toro Warranty Company.