Form No. 3421-465 Rev A

TimeMaster® 30in Lawn Mower

Model No. 21199HD—Serial No. 400000000 and Up

Operator's Manual

Introduction

This rotary-blade, walk-behind lawn mower is intended to be used by residential homeowners. It is designed primarily for cutting grass on well-maintained lawns on residential properties. It is not designed for cutting brush or for agricultural uses.

Read this information carefully to learn how to operate and maintain your product properly and to avoid injury and product damage. You are responsible for operating the product properly and safely.

You may contact Toro directly at www.Toro.com for product and accessory information, help finding a dealer, or to register your product.

Whenever you need service, genuine Toro parts, or additional information, contact an Authorized Service Dealer or Toro Customer Service and have the model and serial numbers of your product ready. Figure 1 identifies the location of the model and serial numbers on the product. Write the product model and serial numbers in the space provided.

Important: **With your mobile device, you can scan the QR code on the serial number decal (if equipped) to access warranty, parts, and other product information.**

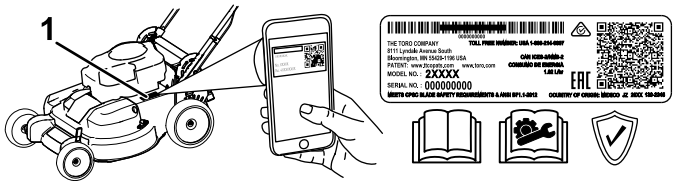

g226622

Figure 1

1. Model and serial number location

Model No. _____

Serial No. _____

This manual identifies potential hazards and has safety messages identified by the safety-alert symbol (Figure 2), which signals a hazard that may cause serious injury or death if you do not follow the recommended precautions.



g000502

Figure 2

Safety-alert symbol

This manual uses 2 words to highlight information. **Important** calls attention to special mechanical information and **Note** emphasizes general information worthy of special attention.

⚠ WARNING

CALIFORNIA
Proposition 65 Warning

This product contains a chemical or chemicals known to the State of California to cause cancer, birth defects, or reproductive harm.

The engine exhaust from this product contains chemicals known to the State of California to cause cancer, birth defects, or other reproductive harm.

It is a violation of California Public Resource Code Section 4442 or 4443 to use or operate the engine on any forest-covered, brush-covered, or grass-covered land unless the engine is equipped with a spark arrester, as defined in Section 4442, maintained in effective working order or the engine is constructed, equipped, and maintained for the prevention of fire.

The enclosed *Engine Owner's Manual* is supplied for information regarding the US Environmental Protection Agency (EPA) and the California Emission Control Regulation of emission systems, maintenance, and warranty. Replacements may be ordered through the engine manufacturer.

Gross or Net Torque: The gross or net torque of this engine was laboratory rated by the engine manufacturer in accordance with the Society of Automotive Engineers (SAE) J1940 or J2723. As configured to meet safety, emission, and operating requirements, the actual engine torque on this class of mower will be significantly lower. Please refer to the engine manufacturer's information included with the machine.

© 2018—The Toro® Company
8111 Lyndale Avenue South
Bloomington, MN 55420

Register at www.Toro.com.

Original Instructions (EN)
Printed in Mexico
All Rights Reserved

3421-465 A

Contents

Introduction 1
Safety 2
General Safety 2
Safety and Instructional Decals 3
Setup 5
1 Assembling and Unfolding the Handle 5
2 Installing the Blade-Control Bar 5
3 Filling the Engine with Oil 7
4 Assembling the Grass Bag 7
Product Overview 8
Specifications 8
Attachments/Accessories 8
Operation 9
Before Operation 9
Before Operation Safety 9
Filling the Fuel Tank 9
Checking the Engine-Oil Level 10
Adjusting the Handle Height 11
Adjusting the Cutting Height 12
During Operation 12
During Operation Safety 12
Starting the Engine 13
Using the Self-Propel Drive 13
Shutting Off the Engine 14
Engaging the Blades 14
Disengaging the Blades 14
Checking the Blade-Stop System Operation 14
Recycling the Clippings 15
Bagging the Clippings 16
Side-Discharging the Clippings 16
Operating Tips 17
After Operation 17
After Operation Safety 17
Cleaning under the Machine 18
Maintenance 19
Recommended Maintenance Schedule(s) 19
Maintenance Safety 19
Preparing for Maintenance 19
Servicing the Air Filter 20
Changing the Engine Oil 20
Adjusting the Self-Propel Drive 21
Servicing the Blade-Drive System 22
Servicing the Blades 22
Checking for Bent Blades 24
Removing the Blades 24
Installing the Blades 25
Storage 26
General Information 26
Preparing the Fuel System 26
Preparing the Engine 26
Removing the Machine from Storage 26

Safety

This machine has been designed in accordance with ANSI B71.1-2012.

General Safety

This product is capable of amputating hands and feet and of throwing objects. Always follow all safety instructions to avoid serious personal injury.

Using this product for purposes other than its intended use could prove dangerous to you and bystanders.

- Read, understand, and follow the instructions and warnings in this *Operator's Manual* and on the machine and attachments before starting the engine.
- Use your full attention while operating the machine. Do not engage in any activity that causes distractions; otherwise, injury or property damage may occur.
- Do not put your hands or feet near moving parts of or under the machine. Keep clear of any discharge opening.
- Do not operate the machine without all guards and other safety protective devices in place and working on the machine.
- Keep bystanders and children a safe distance away from the machine. Do not allow children to operate the machine. Allow only people who are responsible, trained, familiar with the instructions, and physically capable to operate the machine.
- Stop the machine, shut off the engine, and wait for all moving parts to stop before servicing, fueling, or unclogging the machine.

Improperly using or maintaining this machine can result in injury. To reduce the potential for injury, comply with these safety instructions and always pay attention to the safety-alert symbol, which means Caution, Warning, or Danger—personal safety instruction. Failure to comply with these instructions may result in personal injury or death.

You can find additional safety information where needed throughout this manual.

Safety and Instructional Decals

Safety decals and instructions are easily visible to the operator and are located near any area of potential danger. Replace any decal that is damaged or missing.

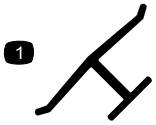

decaloemmarkt

Manufacturer's Mark

1. This mark indicates that the blade is identified as a part from the original machine manufacturer.



decal94-8072

94-8072



decal117-2718

117-2718



decal120-9570

120-9570

1. Warning—stay away from moving parts; keep all guards and shields in place.

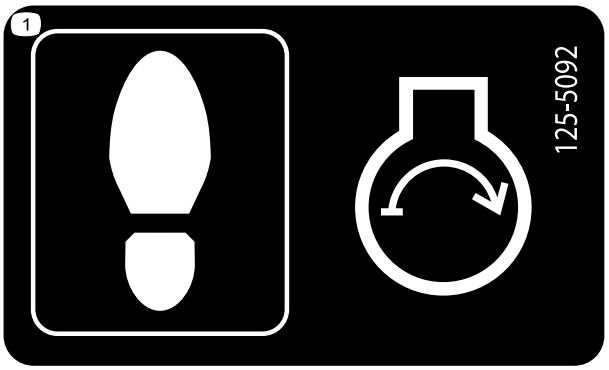

decal125-5092

125-5092

1. Step on the mower housing to start the engine.

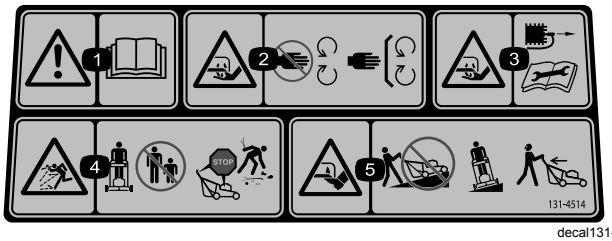

decal131-4514b

131-4514

1. Warning—read the *Operator's Manual*.
2. Cutting/dismemberment hazard of hand, mower blade—stay away from moving parts; keep all guards and shields in place.
3. Cutting/dismemberment hazard of hand, mower blade—disconnect the spark-plug wire and read the instructions before servicing or performing maintenance.
4. Thrown object hazard—keep bystanders a safe distance away from the machine; shut off the engine before leaving the operating position; pick up any debris before mowing.
5. Cutting/dismemberment hazard of hand, mower blade—do not operate up and down slopes; operate side to side on slopes; look behind you when backing up.

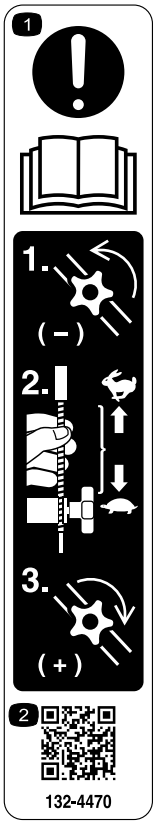

decal132-4470

132-4470

Traction Adjustment

1. Attention; read the *Operator's Manual*—1) Loosen the knob by turning it counterclockwise; 2) Pull the cable(s) away from the engine to decrease the traction, or push the cable(s) toward the engine to increase the traction; 3) Tighten the knob by turning it clockwise.
2. Scan the QR code for more information on traction adjustment.

Setup

Important: **Remove and discard the protective plastic sheet that covers the engine and any other plastic or wrapping on the machine.**

1

Assembling and Unfolding the Handle

No Parts Required

Procedure

⚠ WARNING

Assembling and unfolding the handle improperly can damage the cables, causing an unsafe operating condition.

- **Do not damage the cables when unfolding the handle.**
- **If a cable is damaged, contact an Authorized Service Dealer.**

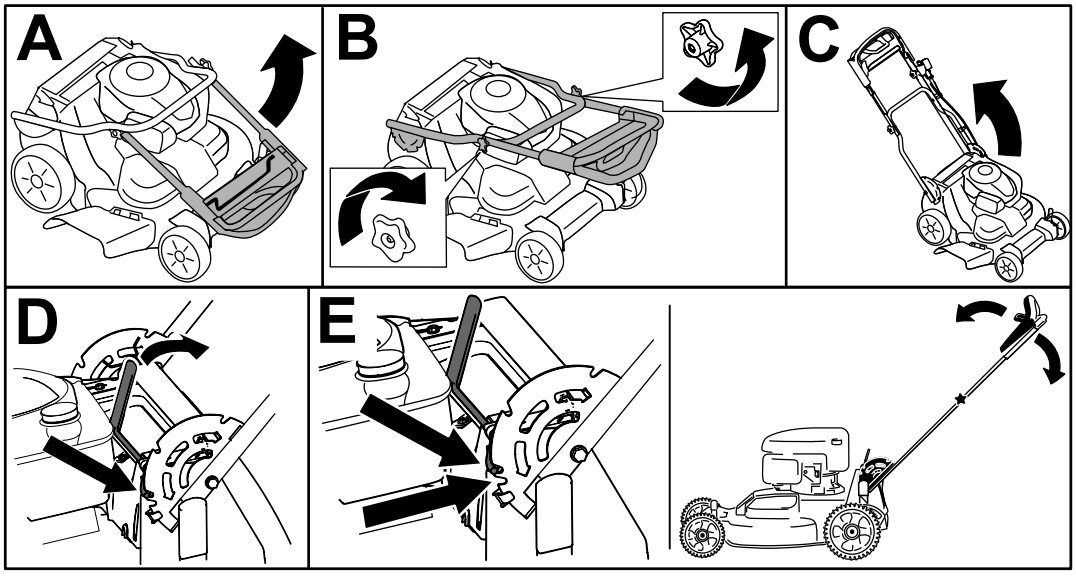

g224528

Figure 3

2

Installing the Blade-Control Bar

No Parts Required

Procedure

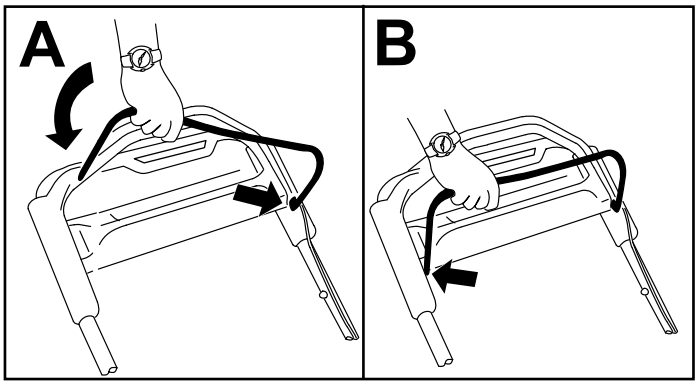

g225133

Figure 4

3

Filling the Engine with Oil

No Parts Required

Procedure

Important: **Your machine does not come with oil in the engine, but it does come with a bottle of oil. Before starting the engine, fill the engine with oil.**

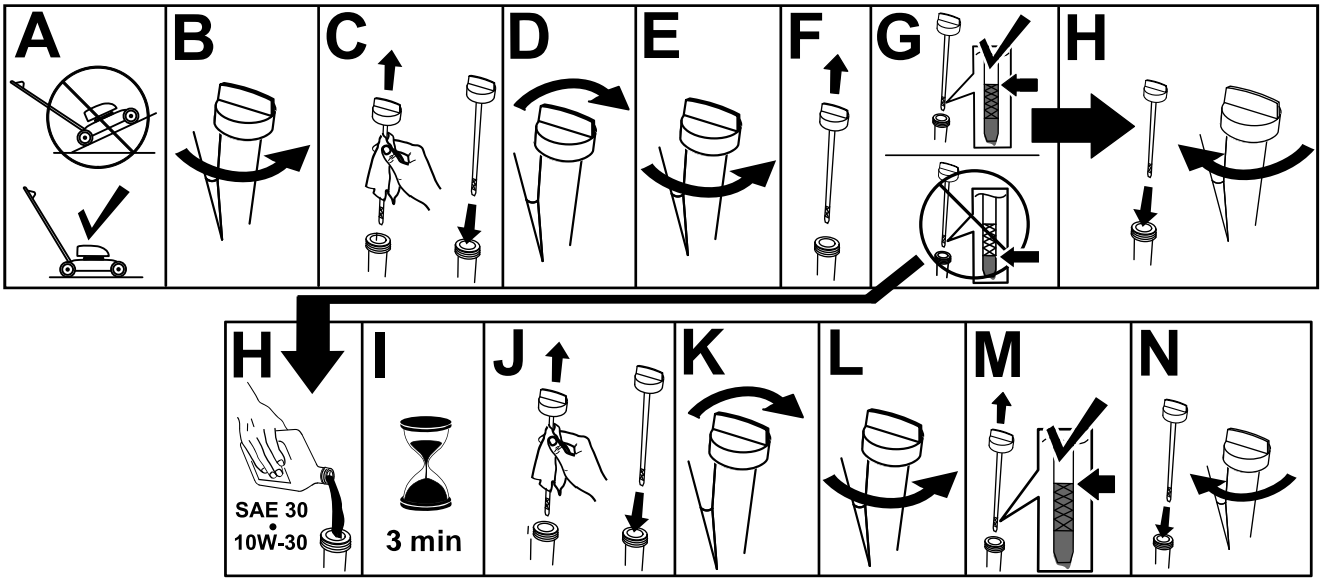

g222533

Figure 5

4

Assembling the Grass Bag

No Parts Required

Procedure

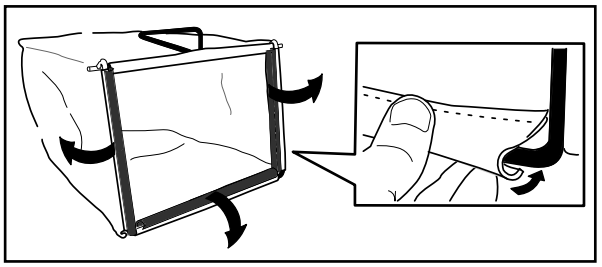

g230447

Figure 6

Product Overview

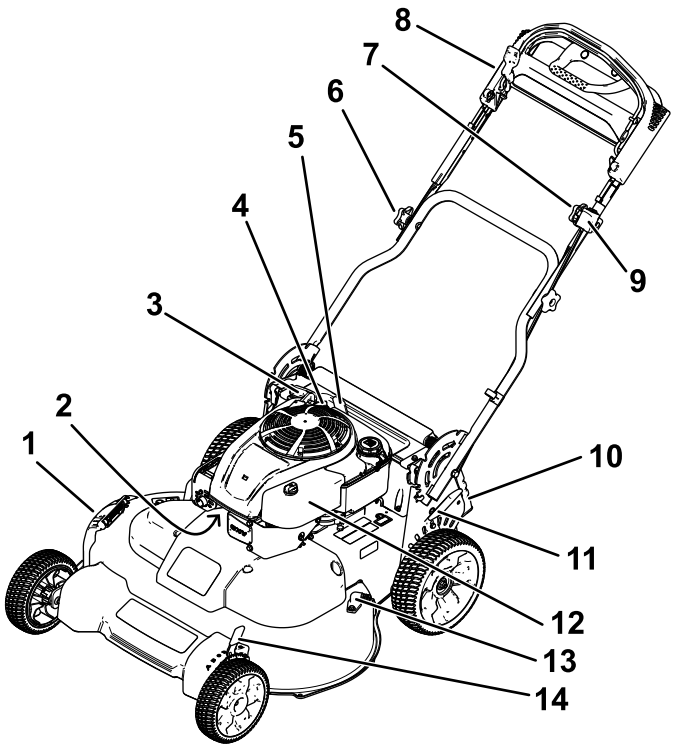

Figure 7

1. Side-discharge deflector
2. Spark plug
3. Recoil-start handle
4. Oil fill/dipstick
5. Handle-lock lever
6. Handle knob (2)
7. Adjustment knob for the self-propel drive
8. Upper handle
9. Engine-shutoff switch
10. Rear deflector
11. Rear cutting-height lever
12. Air filter
13. Washout port
14. Front cutting-height lever

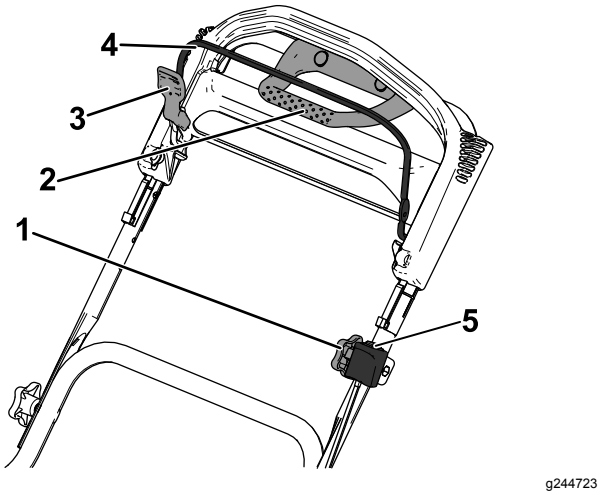

Figure 8

Upper handle

1. Adjustment knob for the self-propel drive
2. Traction-assist handle
3. Blade-control-bar lock
4. Blade-control bar
5. Engine-shutoff switch

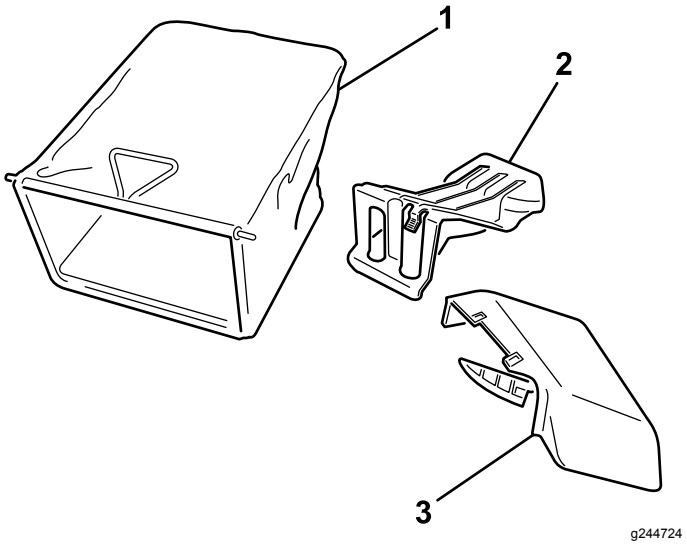

Figure 9

1. Grass bag
2. Rear-discharge plug (installed)
3. Side-discharge chute

Specifications

Attachments/Accessories

A selection of Toro approved attachments and accessories is available for use with the machine to enhance and expand its capabilities. Contact your Authorized Service Dealer or authorized Toro distributor or go to www.Toro.com for a list of all approved attachments and accessories.

To ensure optimum performance and continued safety certification of the machine, use only genuine Toro replacement parts and accessories. Replacement parts and accessories made by other manufacturers could be dangerous, and such use could void the product warranty.

Operation

Note: Determine the left and right sides of the machine from the normal operating position.

Before Operation

Before Operation Safety

General Safety

- Become familiar with the safe operation of the equipment, operator controls, and safety signs.
- Check that all guards and safety devices, such as deflectors and/or grass catcher, are in place and working properly.
- Always inspect the machine to ensure that the blades, blade bolts, and cutting assembly are not worn or damaged.
- Inspect the area where you will use the machine, and remove all objects that could interfere with the operation of the machine or that the machine could throw.
- Adjusting the cutting height may bring you into contact with the moving blade, causing serious injury.
  - Shut off the engine, remove the ignition key (electric-start model only), and wait for all moving parts to stop.
  - Do not put your fingers under the housing when adjusting the cutting height.

Fuel Safety

- Fuel is extremely flammable and highly explosive. A fire or explosion from fuel can burn you and others and can damage property.
  - To prevent a static charge from igniting the fuel, place the container and/or machine directly on the ground before filling, not in a vehicle or on an object.
  - Fill the fuel tank outdoors, in an open area, when the engine is cold. Wipe up any fuel that spills.
  - Do not handle fuel when smoking or around an open flame or sparks.
  - Do not remove the fuel cap or add fuel to the tank while the engine is running or hot.
  - If you spill fuel, do not attempt to start the engine. Avoid creating a source of ignition until the fuel vapors have dissipated.
  - Store fuel in an approved container and keep it out of the reach of children.
- Fuel is harmful or fatal if swallowed. Long-term exposure to vapors can cause serious injury and illness.
  - Avoid prolonged breathing of vapors.
  - Keep your hands and face away from the nozzle and the fuel-tank opening.
  - Keep fuel away from your eyes and skin.

Filling the Fuel Tank

- For best results, use only clean, fresh, unleaded gasoline with an octane rating of 87 or higher ((R+M)/2 rating method).
- Oxygenated fuel with up to 10% ethanol or 15% MTBE by volume is acceptable.
- **Do not** use ethanol blends of gasoline, such as E15 or E85, with more than 10% ethanol by volume. Performance problems and/or engine damage may result, which may not be covered under the warranty.
- **Do not** use gasoline containing methanol.
- **Do not** store fuel either in the fuel tank or in fuel containers over the winter unless fuel stabilizer has been added to the fuel.
- **Do not** add oil to gasoline.

Fill the fuel tank with fresh unleaded regular gasoline from a major name-brand service station.

Important: **To reduce starting problems, add fuel stabilizer to the gasoline all season. Mix the stabilizer with gasoline less than 30 days old.**

1. Clean around the fuel-tank cap and remove the cap from the tank (A of Figure 10).

   Important: **This machine is equipped with a premium fuel tank that uses a foam insert to prevent fuel agitation. Never remove the foam element, because it allows the engine to use all the fuel in the tank (B of Figure 10).**

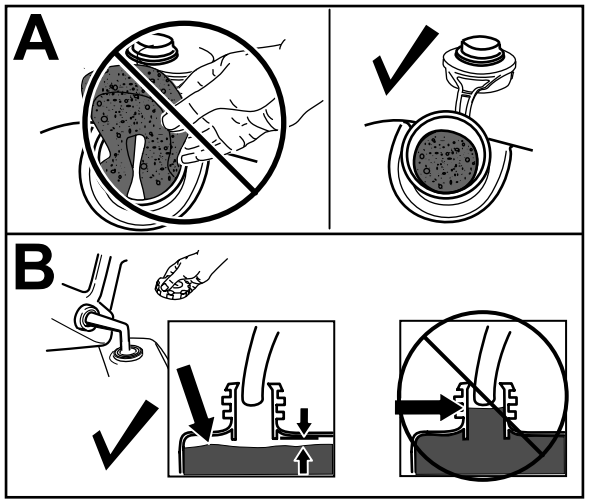

g234916

Figure 10

2. Install the fuel-tank cap and tighten it securely by hand.

Checking the Engine-Oil Level

Service Interval: Before each use or daily

Important: **If the oil level in the crankcase is too low or too high and you run the engine, you may damage the engine.**

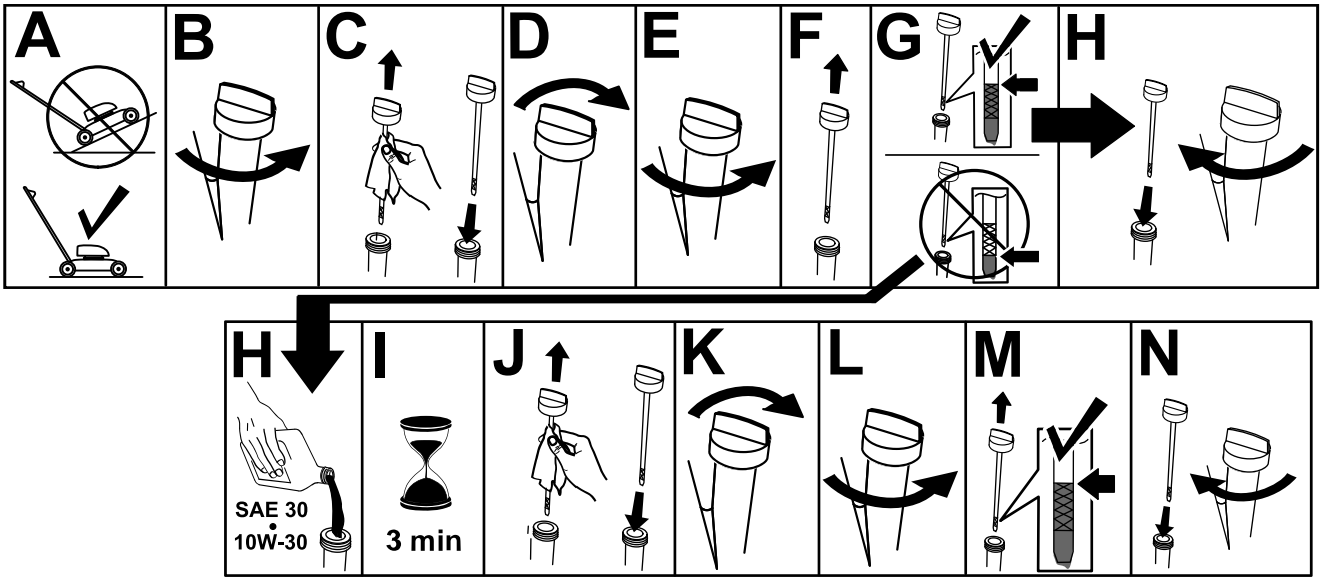

g222533

Figure 11

Adjusting the Handle Height

You can raise or lower the handle to a position more comfortable for you.

1. Pull the handle-lock lever rearward to disengage the handle-lock pins (Figure 12).

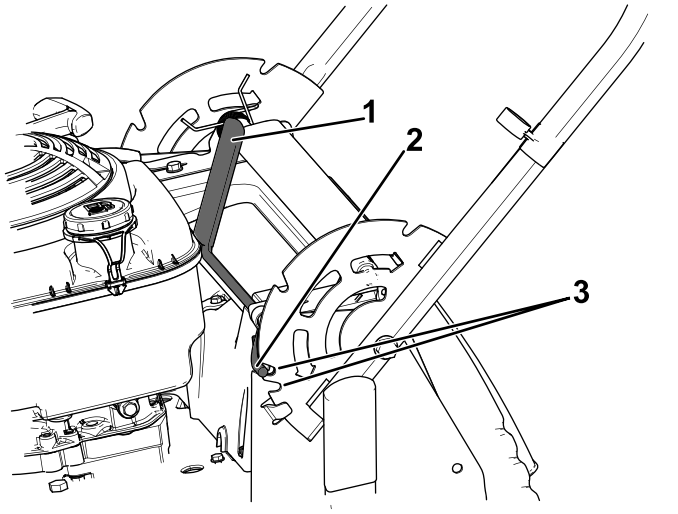

g191982

Figure 12

1. Handle-lock lever
2. Handle-lock pin (2)
3. Notches

2. Rotate the handle and align the desired notch in the handle bracket to the handle-lock pins; refer to Figure 12.
3. Release the handle-lock lever to secure the handle in place.

Adjusting the Cutting Height

⚠ CAUTION

If the engine has been running, the muffler will be hot and can severely burn you.

Keep away from the hot muffler.

Note: To raise the machine, move the front and rear cutting-height levers forward; to lower the machine, move the cutting-height levers rearward. Set all the wheels to the same height unless special circumstances require otherwise; refer to Operating Tips (page 17).

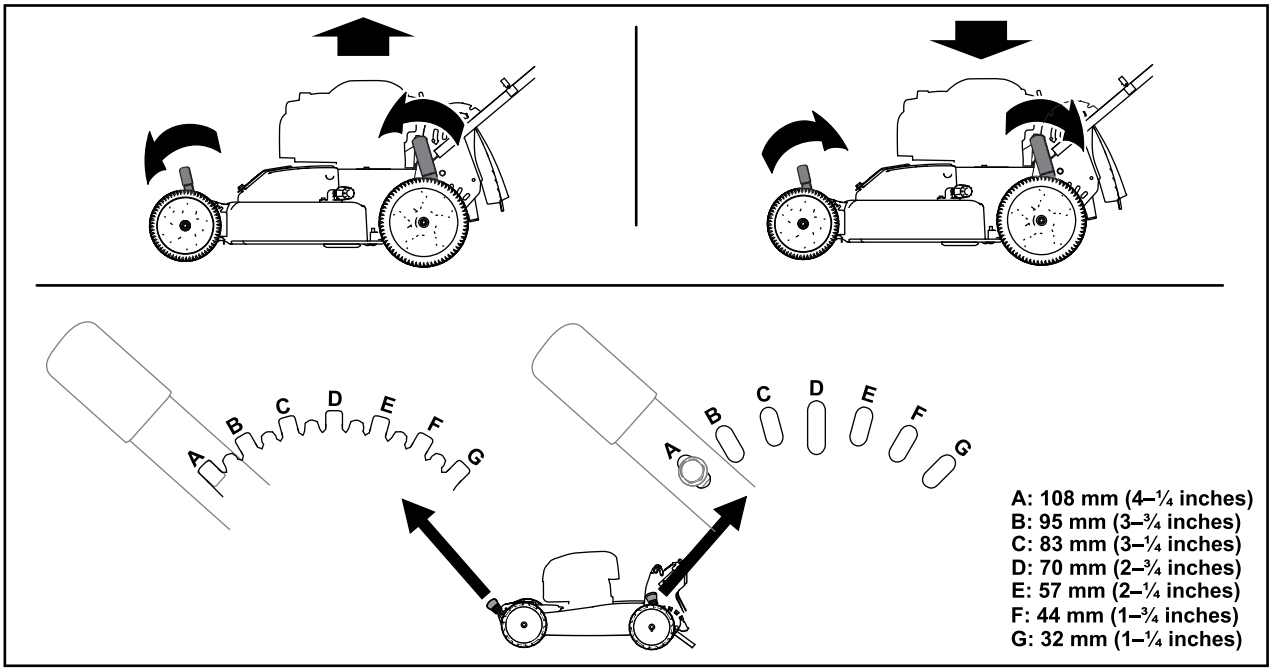

g224172

Figure 13

During Operation

During Operation Safety

General Safety

- Wear appropriate clothing, including eye protection; long pants; substantial, slip-resistant footwear; and hearing protection. Tie back long hair, secure loose clothing, and do not wear loose jewelry.
- Do not operate the machine while ill, tired, or under the influence of alcohol or drugs.
- The blade is sharp; contacting the blade can result in serious personal injury. Shut off the engine, remove the ignition key (electric-start model only), and wait for all moving parts to stop before leaving the operating position.
- When you release the blade-control bar, the engine should shut off and the blade should stop within 3 seconds. If not, stop using your machine immediately and contact an Authorized Service Dealer.
- Keep bystanders, especially small children, out of the operating area. Stop the machine if anyone enters the area.
- Always look down and behind you before moving the machine in reverse.
- Operate the machine only in good visibility and appropriate weather conditions. Do not operate the machine when there is the risk of lighting.
- Wet grass or leaves can cause serious injury if you slip and contact the blade. Avoid mowing in wet conditions.
- Use extreme care when approaching blind corners, shrubs, trees, or other objects that may block your view.
- Watch for holes, ruts, bumps, rocks, or other hidden objects. Uneven terrain could cause the

machine to overturn or cause you to lose your balance or footing.

- If the machine strikes an object or starts to vibrate, immediately shut off the engine, remove the key (if equipped), wait for all moving parts to stop, and disconnect the wire from the spark plug before examining the machine for damage. Make all necessary repairs before resuming operation.
- Before leaving the operating position, shut off the engine, remove the ignition key (electric-start model only), and wait for all moving parts to stop.
- If the engine has been running the muffler will be hot and can severely burn you. Keep away from the hot muffler.
- Check the grass catcher components and the discharge chute frequently for any wear or deterioration and replace them with the manufacturer's recommended parts when necessary.
- Use accessories and attachments approved by The Toro® Company only.

Slope Safety

- Mow across the face of slopes; never up and down. Use extreme caution when changing direction on slopes.
- Do not mow on excessively steep slopes. Poor footing could cause a slip-and-fall accident.
- Mow with caution near drop-offs, ditches, or embankments.

Starting the Engine

Pull the recoil handle slowly until you feel resistance, then pull it sharply. Allow the rope to return to the engine slowly.

Note: If the machine does not start after several attempts, contact an Authorized Service Dealer.

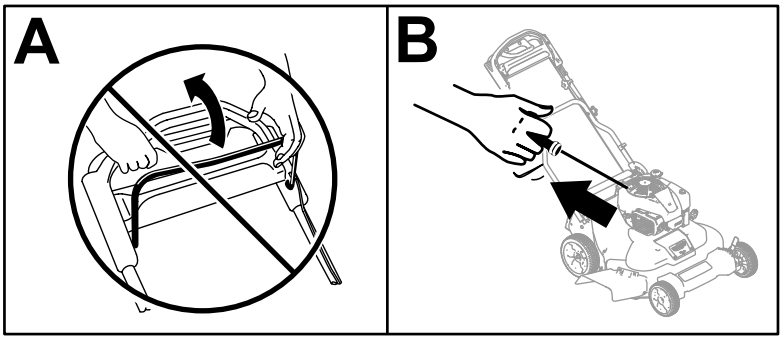

g234917

Figure 14

Using the Self-Propel Drive

To operate the self-propel drive, simply walk with your hands gripping the upper handle and your elbows at your sides, and the machine will automatically keep pace with you (Figure 15).

Note: You can self-propel the machine with the blades engaged or disengaged.

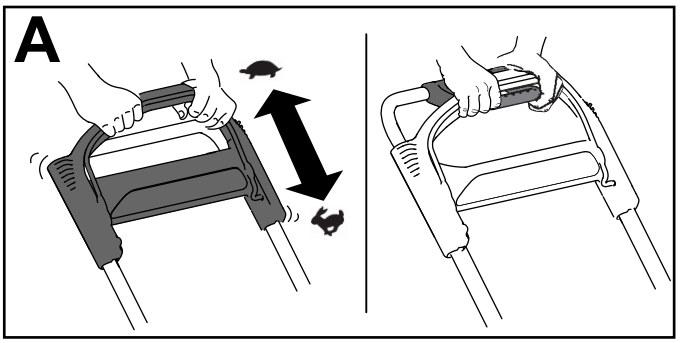

g244853

Figure 15

Note: Use the traction-assist handle in situations when you need more control than you have with the self-propel drive alone.

Shutting Off the Engine

Press the toggle switch (Figure 16) to the STOP position and hold it until the engine shuts off.

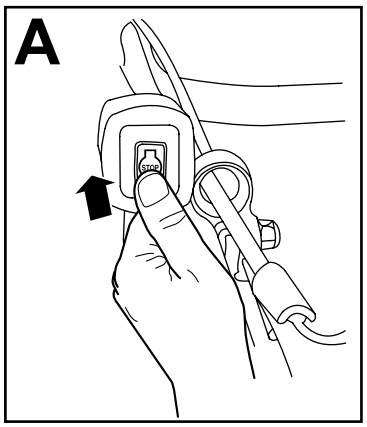

g234921

Figure 16

Engaging the Blades

When you start your engine, the blades do not turn. You must engage the blades to mow.

1. Pull the blade-control-bar lock back to the blade-control bar (Figure 17).

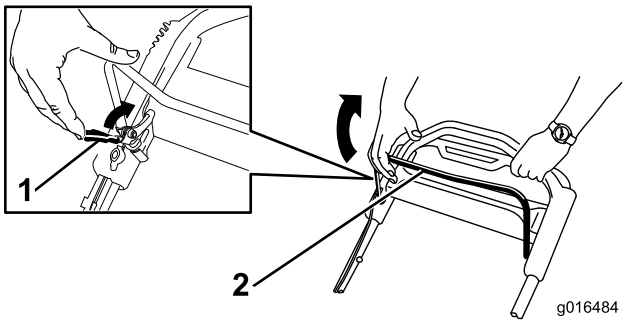

g016484

Figure 17

1. Blade-control bar lock
2. Blade-control bar

2. **Slowly** pull the blade-control bar back to the handle (Figure 17).
3. Hold the blade-control bar against the handle (Figure 18).

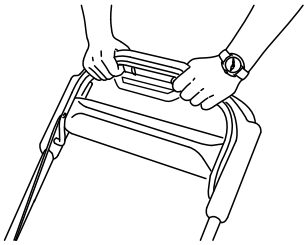

g193334

Figure 18

Disengaging the Blades

Release the blade-control bar (Figure 19).

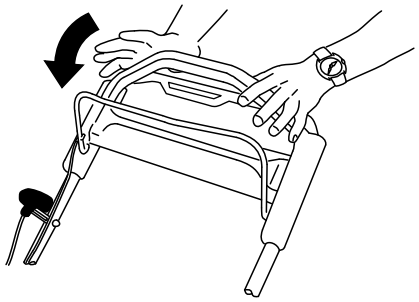

g193345

Figure 19

Important: **When you release the blade-control bar, the blades should stop within 3 seconds. If they do not stop properly, stop using your machine immediately and contact an Authorized Service Dealer.**

Checking the Blade-Stop System Operation

Service Interval: Before each use or daily

Check that the blades stop within 3 seconds of releasing the blade-control bar.

Using the Grass Bag

You can use the grass bag to check the blade-stop system.

1. Remove the rear-discharge plug.
2. Install the empty grass bag on the machine.
3. Start the engine.
4. Engage the blades.

   Note: The bag should begin to inflate, indicating that the blades are rotating.

5. While watching the bag, release the blade-control bar.

   Note: If the bag does not deflate within 3 seconds of releasing the blade-control bar, the blade-stop system may be deteriorating and, if ignored, could result in an unsafe operating condition. Have the machine inspected and serviced by an Authorized Service Dealer.

6. Shut off the engine and wait for all moving parts to stop.

Not Using the Grass Bag

1. Move the machine onto a paved surface in a non-windy area.
2. Set all 4 wheels to the 89 mm (3-1/2 inch) cutting height setting.
3. Take a half sheet of newspaper and crumple it into a ball small enough to go under the machine housing (about 76 mm (3 inches) in diameter).
4. Place the newspaper ball about 13 cm (5 inches) in front of the machine.
5. Start the engine.
6. Engage the blades.
7. Release the blade-control bar and begin counting out 3 seconds.
8. On the count of 3, push the machine quickly forward over the newspaper.
9. Shut off the engine and wait for all moving parts to stop.
10. Go to the front of the machine and check the newspaper ball.

    Note: If the newspaper ball did not go under the machine, repeat steps 4 through 10.

11. If the newspaper is unravelled or shredded, the blades did not stop properly, which could result in an unsafe operating condition. Contact an Authorized Service Dealer.

Recycling the Clippings

This machine comes from the factory ready to recycle grass and leaf clippings back into the lawn. To prepare the machine to recycle, do the following:

- If the side-discharge chute is on the machine, remove it and lower the side-discharge door; refer to Removing the Side-Discharge Chute (page 17).
- If the grass bag is on the machine, remove it; refer to Removing the Grass Bag (page 16).
- If the rear-discharge plug is not installed, grip it by the handle, raise the rear door, and insert it into the rear-discharge chute until the latch locks into place; refer to Figure 19.

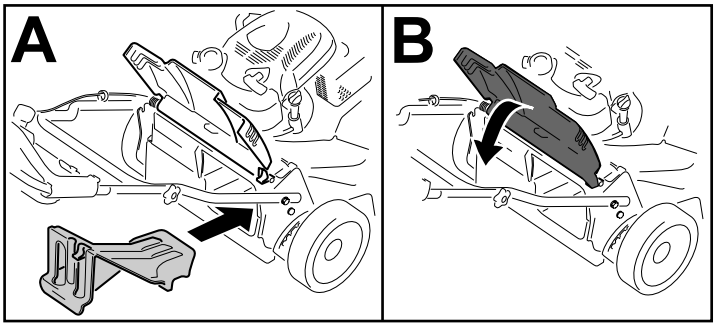

g234924

Figure 20

⚠ WARNING

Operating the machine to recycle lawn clippings without the plug in place allows objects to be thrown toward you or bystanders. Also, contact with the blades could occur. Thrown objects or blade contact can cause serious injury or death.

Ensure that the rear-discharge plug is in place before you recycle the clippings. Never engage the blades without either the rear-discharge plug or the grass bag installed on the machine.

Bagging the Clippings

Use the grass bag when you want to collect grass and leaf clippings from the lawn.

If the side-discharge chute is on the mower, remove it before bagging the clippings; refer to Removing the Side-Discharge Chute (page 17).

Installing the Grass Bag

1. Raise and hold up the rear door (A of Figure 21).
2. Remove the rear-discharge plug by pulling down on the latch with your thumb and pulling the plug out from the machine (B of Figure 21).
3. Install the bag rod into the notches at the base of the handle and rock the bag back and forth to ensure that the rod is seated at the bottom of both notches (C of Figure 21)
4. Lower the rear door until it rests on the grass bag.

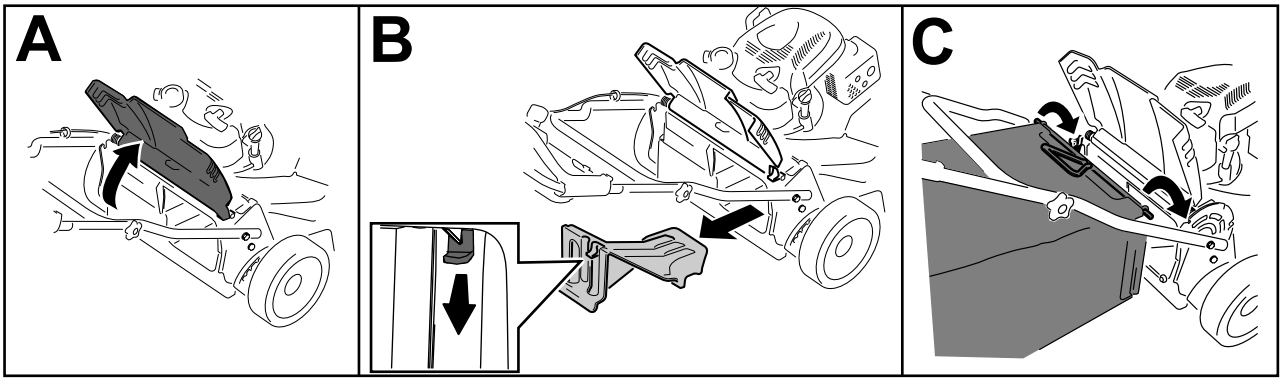

Figure 21

Removing the Grass Bag

To remove the bag, reverse the steps in Installing the Grass Bag (page 16).

Side-Discharging the Clippings

Use the side discharge for cutting very tall grass.

If the bag is on the machine, remove it and insert the rear-discharge plug; refer to Removing the Grass Bag (page 16) before side-discharging the clippings.

Important: **Ensure that the rear-discharge plug is in place before you recycle the clippings (Figure 20).**

Installing the Side-Discharge Chute

1. Lift open the side-discharge door (A of Figure 22).
2. Install the side-discharge chute and close the door onto the chute (B and C of Figure 22).

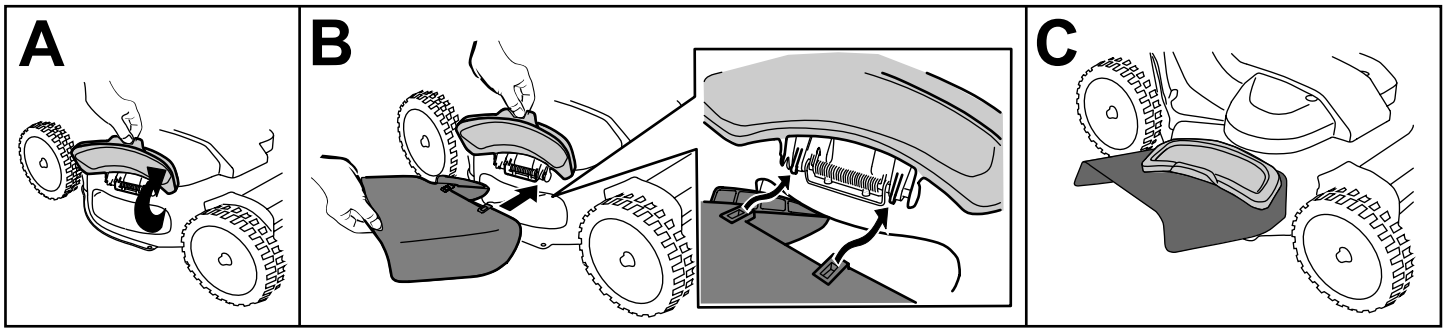

g244855

Figure 22

Removing the Side-Discharge Chute

To remove the side-discharge chute, reverse the steps in Installing the Side-Discharge Chute (page 16).

Operating Tips

General Mowing Tips

- Inspect the area where you will use the machine and remove all objects that the machine could throw.
- Avoid striking solid objects with the blades. Never deliberately mow over any object.
- If the machine strikes an object or starts to vibrate, immediately shut off the engine, remove the key (if equipped), disconnect the wire from the spark plug, and examine the machine for damage.
- For best performance, install new blades before the cutting season begins.
- Replace the blades when necessary with Toro replacement blades.

Cutting Grass

- Cut only about a third of the grass blade at a time. Do not cut below 51 mm (2 inches) unless the grass is sparse or it is late fall when grass growth begins to slow down.
- When cutting grass over 15 cm (6 inches) tall, mow at the highest cutting height setting and walk slower; then mow again at a lower setting for the best lawn appearance. If the grass is too long, the machine may plug and cause the engine to stall.
- Wet grass and leaves tend to clump on the yard and can cause the machine to plug or the engine to stall. Avoid mowing in wet conditions.
- Be aware of a potential fire hazard in very dry conditions, follow all local fire warnings, and keep the machine free of dry grass and leaf debris.
- Alternate the mowing direction. This helps disperse the clippings over the lawn for even fertilization.
- If the finished lawn appearance is unsatisfactory, try 1 or more of the following:
  - Replace the blades or have them sharpened.
  - Walk at a slower pace while mowing.
  - Raise the cutting height on your machine.
  - Cut the grass more frequently.
  - Overlap cutting swaths instead of cutting a full swath with each pass.

Cutting Leaves

- After cutting the lawn, ensure that half of the lawn shows through the cut leaf cover. You may need to make more than a single pass over the leaves.
- If there are more than 13 cm (5 inches) of leaves on the lawn, mow at a higher cutting height and then again at the desired cutting height.
- Slow down your mowing speed if the machine does not cut the leaves finely enough.

After Operation

After Operation Safety

General Safety

- Clean grass and debris from the machine to help prevent fires. Clean up oil or fuel spills.
- Allow the engine to cool before storing the machine in any enclosure.
- Never store the machine or fuel container where there is an open flame, spark, or pilot light, such as on a water heater or on other appliances.

Hauling Safety

- Remove the ignition key (if equipped) before loading the machine for hauling.
- Use care when loading or unloading the machine.
- Secure the machine from rolling.

Cleaning under the Machine

Service Interval: Before each use or daily

1. Move the machine to a level surface.
2. Shut off the engine and wait for all moving parts to stop before leaving the operating position.
3. Lower the machine to its lowest cutting-height setting. Refer to Adjusting the Cutting Height (page 12).
4. Attach a hose to the washout fitting, and turn the water on high (Figure 23).

   Note: Spread petroleum jelly on the washout fitting O-ring to make the coupling slide on easier and protect the O-ring.

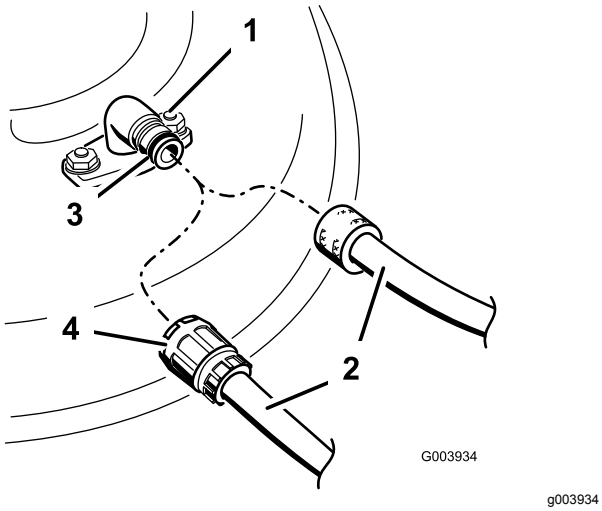

Figure 23

1. Washout fitting
2. Hose
3. O-ring
4. Coupling

5. Start the engine, engage the blade-control lever, and let the machine run for 1 to 3 minutes with the blades turning.
6. Disengage the blade-control lever, shut off the engine, and wait for all moving parts to stop.
7. Shut off the water and remove the coupling from the washout fitting.

   Note: If the machine is not clean after a single washing, soak it and let it stand for 30 minutes. Then repeat the process.
8. Run the machine again and engage the blades for 1 to 3 minutes to remove the excess water.

⚠ WARNING

A broken or missing washout fitting could expose you and others to thrown objects or blade contact. Contact with a blade or thrown debris can cause injury or death.

- **Replace a broken or missing washout fitting immediately, before using the machine again.**
- **Never put your hands or feet under the machine or through openings in the machine.**

Maintenance

Recommended Maintenance Schedule(s)

Maintenance Service Interval	Maintenance Procedure
After the first 5 hours	• Change the engine oil.
Before each use or daily	• Check the engine-oil level and add oil as needed. • Check the blade-brake-clutch operation. • Clean grass clippings and dirt from under the machine. • Check the air filter and clean or replace it, if necessary. • Check the cutting blades.
Every 50 hours	• Clean the air filter; clean it more frequently in dusty operating conditions. • Change the engine oil. • Service the blade-drive system.
Every 200 hours	• Replace the air filter; replace it more frequently in dusty operation conditions.
Yearly	• Service the air filter; service it more frequently in dusty operating conditions. • Change the engine oil. • Service the blades.
Yearly or before storage	• Empty the fuel tank before repairs as directed and before yearly storage.

Important: **Refer to your engine owner's manual for additional maintenance procedures.**

Maintenance Safety

- Disconnect the spark-plug wire from the spark plug before performing any maintenance procedure.
- Wear gloves and eye protection when servicing the machine.
- The blade is sharp; contacting the blade can result in serious personal injury. Wear gloves when servicing the blade. Do not repair or alter the blade(s).
- Never tamper with safety devices. Check their proper operation regularly.
- Tipping the machine may cause the fuel to leak. Fuel is flammable and explosive, and can cause personal injury. Run the engine dry or remove the fuel with a hand pump; never siphon the fuel.
- To ensure optimum performance and continued safety certification of the machine, use only genuine Toro replacement parts and accessories. Replacement parts and accessories made by other manufacturers could be dangerous, and such use could void the product warranty.

Preparing for Maintenance

1. Shut off the engine, remove the ignition key (if equipped), and wait for all moving parts to stop.
2. Disconnect the spark-plug wire from the spark plug (Figure 24).

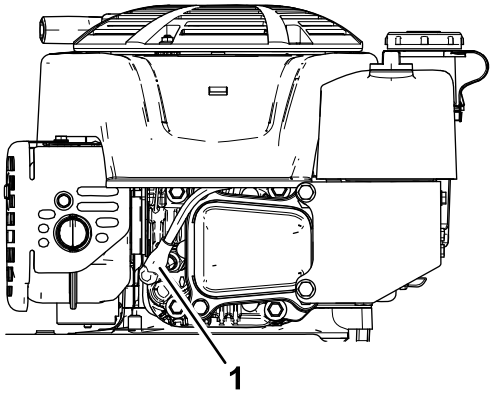

g191983

Figure 24

1. Spark-plug wire

3. After performing the maintenance procedure(s), connect the spark-plug wire to the spark plug.

   Important: **Before tipping the machine to change the oil or replace the blades, allow the fuel tank to run dry through normal usage. If you must tip the machine prior to running out of fuel, use a hand fuel pump to remove the fuel. Always tip the machine onto its side, with the dipstick down.**

⚠ WARNING

Tipping the machine may cause the fuel to leak. Fuel is flammable, explosive, and can cause personal injury.

Run the engine dry or remove the fuel with a hand pump; never siphon.

Servicing the Air Filter

Service Interval: Before each use or daily—Check the air filter and clean or replace it, if necessary.

Every 50 hours—Clean the air filter; clean it more frequently in dusty operating conditions.

Yearly—Service the air filter; service it more frequently in dusty operating conditions.

Every 200 hours—Replace the air filter; replace it more frequently in dusty operation conditions.

1. Loosen the fastener and remove the air-filter cover (Figure 25).

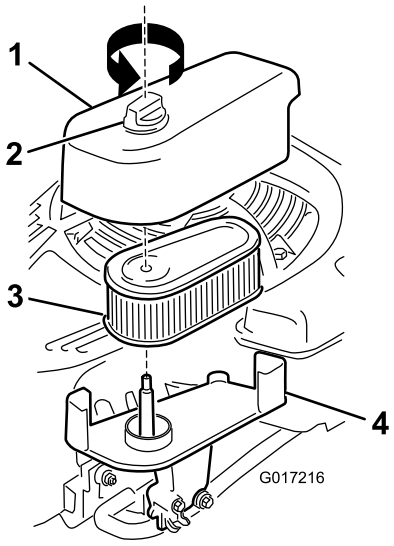

g017216

Figure 25

1. Cover
2. Fastener
3. Filter
4. Base

2. Remove and inspect the filter.
   - If the filter is damaged or is wet with oil or fuel, replace it.
   - If the filter is dirty, tap it on a hard surface several times or blow the debris outward from the interior of the filter using compressed air at less than 207 kPa (30 psi).

     Note: Do not brush or blow dirt from the outside of the filter; either forces dirt into the fibers.
3. Clean the air-filter body and cover using a damp rag. **Keep dirt away from the air opening.**
4. Install the filter onto the base.
5. Install the cover and screw the fastener down securely.

Changing the Engine Oil

Service Interval: After the first 5 hours

Every 50 hours

Yearly

Note: Run the engine a few minutes before changing the oil to warm it. Warm oil flows better and carries more contaminants.

Engine Oil Specifications

Engine oil capacity	0.53 L (18 fl oz)
Oil viscosity	SAE 30 or SAE 10W-30 detergent oil
API service classification	SJ or higher

1. Move the machine to a level surface.
2. Refer to Preparing for Maintenance (page 19).
3. Remove the dipstick by rotating the cap counterclockwise and pulling it out (Figure 26).

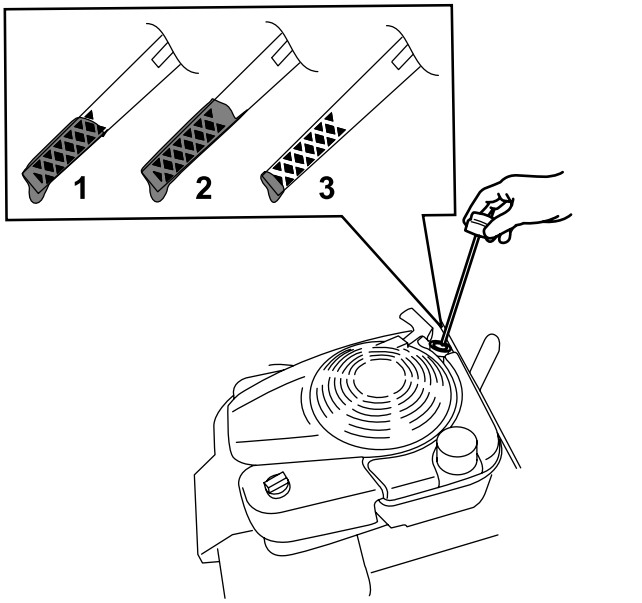

g193261

Figure 26

1. Full
2. High
3. Low

4. Tip the machine onto its side (so that the air filter is up) to drain the used oil from the oil-fill tube (Figure 27).

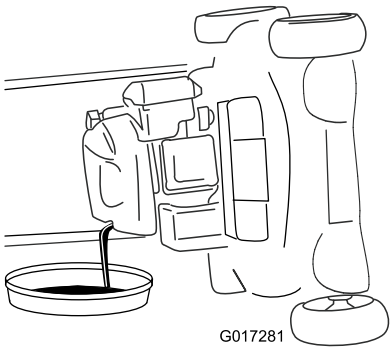

g017281

Figure 27

5. After draining the used oil, return the machine to the operating position.
6. Carefully pour about 3/4 of the engine capacity of oil into the oil-fill tube.
7. Wait 3 minutes for the oil to settle in the engine.
8. Wipe the dipstick clean with a clean cloth.
9. Insert the dipstick into the oil-fill tube, then remove the dipstick.
10. Read the oil level on the dipstick (Figure 26).
    - If the oil level on the dipstick is too low, carefully pour a small amount of oil into the oil-fill tube, wait 3 minutes, and repeat steps 8 through 10 until the oil level on the dipstick is correct.
    - If the oil level on the dipstick is too high, drain the excess oil until the oil level on the dipstick is correct.
11. Install the dipstick into the oil-fill tube securely.
12. Recycle the used oil properly.

Adjusting the Self-Propel Drive

Whenever you install a new self-propel cable or if the self-propel drive is out of adjustment, adjust the self-propel drive.

1. Turn the adjustment knob counterclockwise to loosen the cable adjustment (Figure 28).

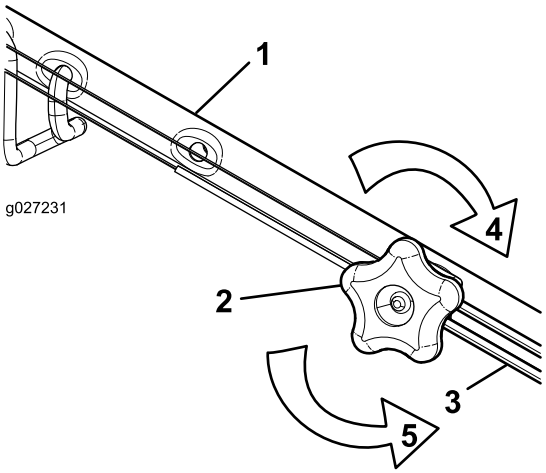

g027231

Figure 28

1. Handle (left side)
2. Adjustment knob
3. Self-propel-drive cable
4. Turn the knob clockwise to tighten the adjustment.
5. Turn the knob counterclockwise to loosen the adjustment.

2. Adjust the tension on the cable (Figure 28) by pulling it back or pushing it forward and holding that position.

   Note: Push the cable toward the engine to increase the traction; pull the cable away from the engine to decrease the traction.
3. Turn the adjustment knob clockwise to tighten the cable adjustment.

   Note: Tighten the knob firmly by hand.

Servicing the Blade-Drive System

Service Interval: Every 50 hours

1. Remove the blade-drive system cover (Figure 29).

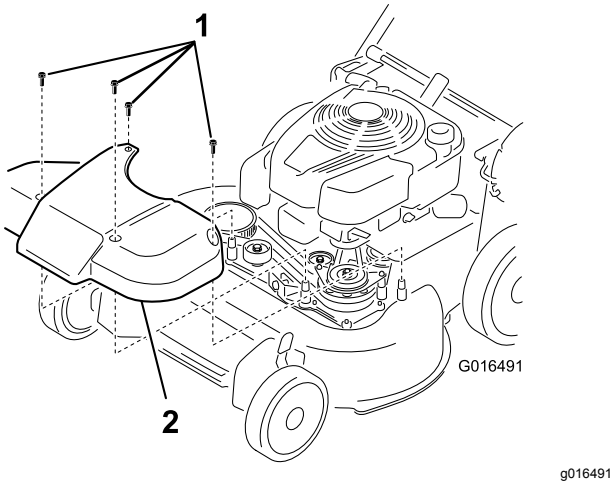

Figure 29

1. Bolts
2. Cover

2. Brush or blow out debris from the inside of the shield and around all the parts.
3. Hold a 0.25 mm (0.010 inch) feeler gauge, a piece of paper, or a note card against the wall and slide it down behind the belt tension spring.

   Note: If there is a visible gap between the gauge and the spring, tighten the adjusting bolt and the nut until the paper barely slides freely in and out of the gap (Figure 30).

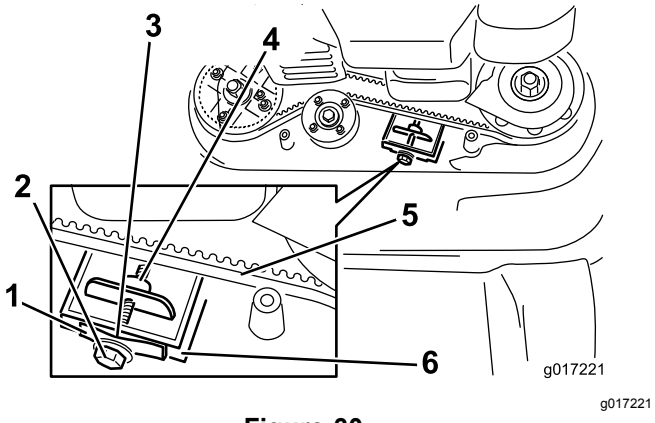

Figure 30

1. Belt-tension spring
2. Adjusting bolt
3. Gap
4. Adjusting nut
5. Blade-drive belt
6. Wall

Important: **Do not overtighten the adjusting bolt. This could damage the blade-drive belt.**

4. Install the blade-drive system cover that you previously removed.

Servicing the Blades

Service Interval: Yearly

Important: ***You will need a torque wrench to install the blades properly.*** **If you do not have a torque wrench or are uncomfortable performing this procedure, contact an Authorized Service Dealer.**

Examine the blades whenever you run out of fuel. If the blades are damaged or cracked, replace them immediately. If the blade edges are dull or nicked, have them sharpened and balanced, or replace them.

Important: **Always wear padded gloves when working with the blade.**

⚠ DANGER

A worn or damaged blade can break, and a piece of the blade could be thrown toward you or bystanders, resulting in serious personal injury or death.

- **Inspect the blades periodically for wear or damage.**
- **Replace a worn or damaged blade.**

Note: Maintain sharp blades throughout the cutting season, because sharp blades cut cleanly without tearing or shredding the grass blades.

Preparing to Service the Cutting Blades

1. Lock the handle in the vertical position (Figure 31); refer to Adjusting the Handle Height (page 11).

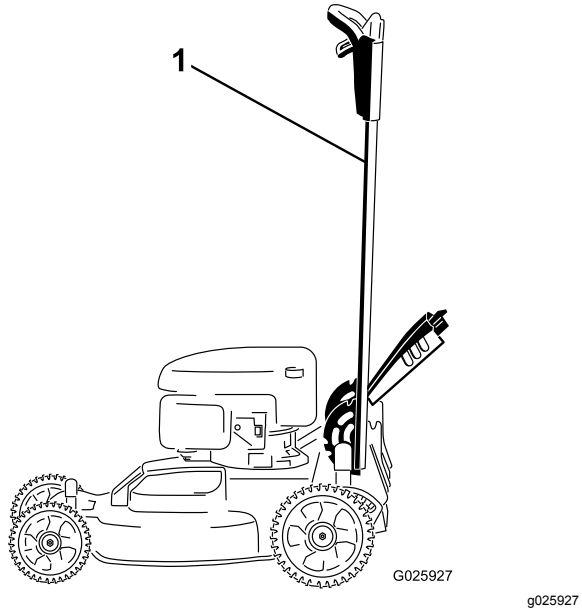

Figure 31

1. Handle locked in the vertical position

2. Tip the machine onto its side, with the dipstick down, until the upper handle rests on the ground.

Inspecting the Blades

Service Interval: Before each use or daily

1. Inspect the cutting edges (Figure 32). If the edges are not sharp or have nicks, remove the blades and have them sharpened or replace them.

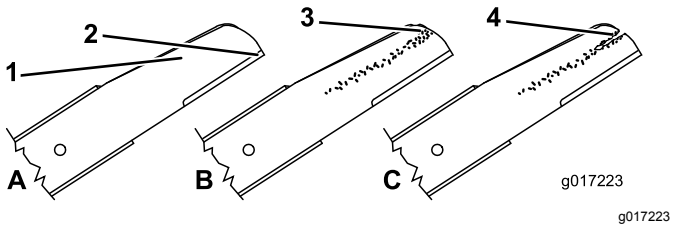

Figure 32

1. Cutting edge
2. Curved area
3. Wear/slot forming
4. Crack

2. Inspect the blades themselves, especially the curved area (Figure 32). If you notice any damage, wear, or a slot forming in this area, immediately replace it with a new blade.

⚠ DANGER

If you allow a blade to wear, a slot will form between the sail and flat part of the blade. Eventually a piece of the blade may break off and be thrown from under the housing, possibly resulting in serious injury to you or bystanders.

- **Inspect the blade periodically for wear or damage.**
- **Never try to straighten a blade that is bent or weld a broken or cracked blade.**
- **Replace a worn or damaged blade.**

3. Check for bent blades; refer to Checking for Bent Blades (page 24).

Checking for Bent Blades

1. Rotate the blades to the position shown in Figure 33.

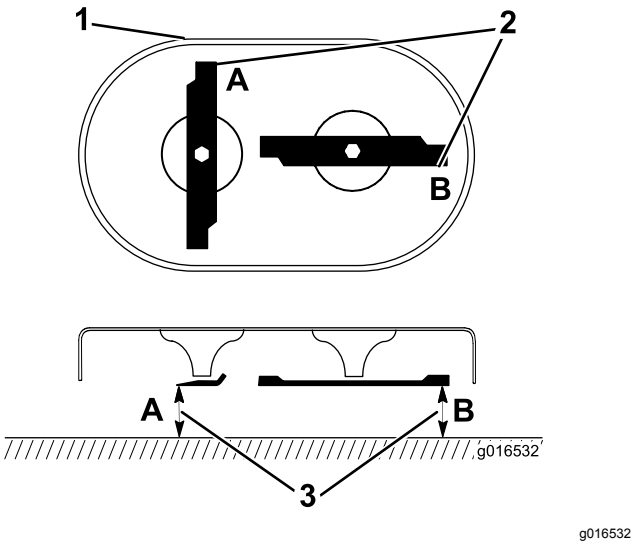

g016532

Figure 33

1. Front of cutting deck
2. Measure at locations A and B
3. Measure from the cutting edge to a smooth, level surface

2. Measure from a level surface to the cutting edges at locations **A** and **B** (Figure 33), and record both dimensions.
3. Rotate the blades so that their opposite ends are at locations **A** and **B** (Figure 33).
4. Repeat the measurements in step 2 and record them.

   Note: If the difference between the dimensions **A** and **B** obtained in steps 2 and 4 exceeds 3 mm (1/8 inch), the blade is bent and you will need to replace it. Refer to Removing the Blades (page 24) and Installing the Blades (page 25).

⚠ WARNING

A blade that is bent or damaged could break apart and could seriously injure or kill you or bystanders.

- **Always replace a bent or damaged blade with a new blade.**
- **Never file or create sharp notches in the edges or surfaces of a blade.**

Removing the Blades

Replace the blades when the machine hits a solid object or when a blade is out of balance or bent. Use only genuine Toro replacement blades.

1. Use a block of wood to hold each blade steady and turn the blade bolt counterclockwise as shown in Figure 34.

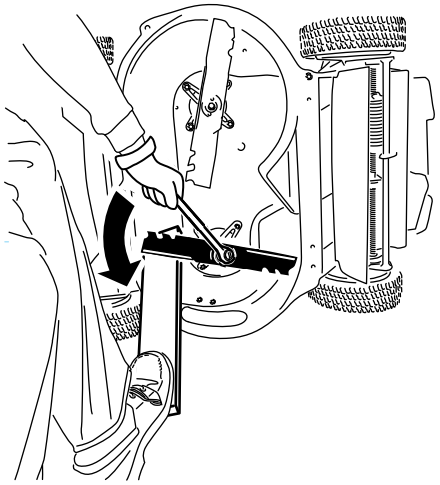

g232790

Figure 34

2. Remove each blade as shown in Figure 35.

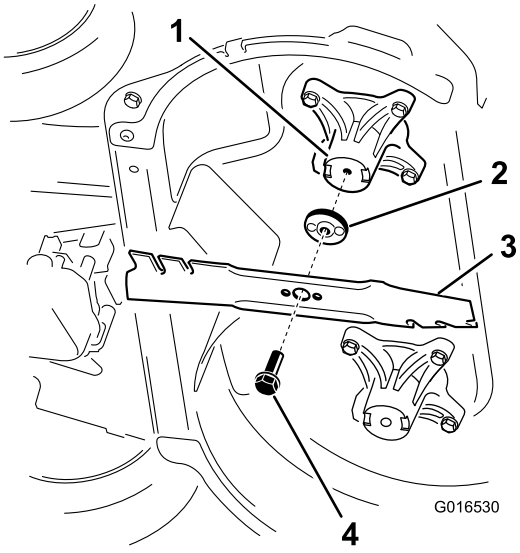

g016530

Figure 35

1. Spindle (2)
2. Blade driver (2)
3. Blade (2)
4. Blade bolt (2)

3. Inspect the pins on the blade drivers for wear and damage.

Installing the Blades

1. Install the first blade so that it is horizontal, along with all mounting hardware as shown in Figure 35.

   Note: Tighten the bolt with your fingers.

   Important: **Position the curved ends of the blades to point toward the machine housing. Be sure to nest the raised areas on each blade driver with the recesses in the head of its corresponding spindle, and the pins on the other side of each blade driver with the holes in its corresponding blade.**

2. Steady each blade with a board and turn the blade bolt clockwise with a torque wrench as shown in Figure 36; torque the blade bolt to 82 N·m (60 ft-lb).

   Important: **A bolt torqued to 82 N·m (60 ft-lb) is very tight. Put your weight behind the wrench and tighten the bolt securely. This bolt is very difficult to overtighten.**

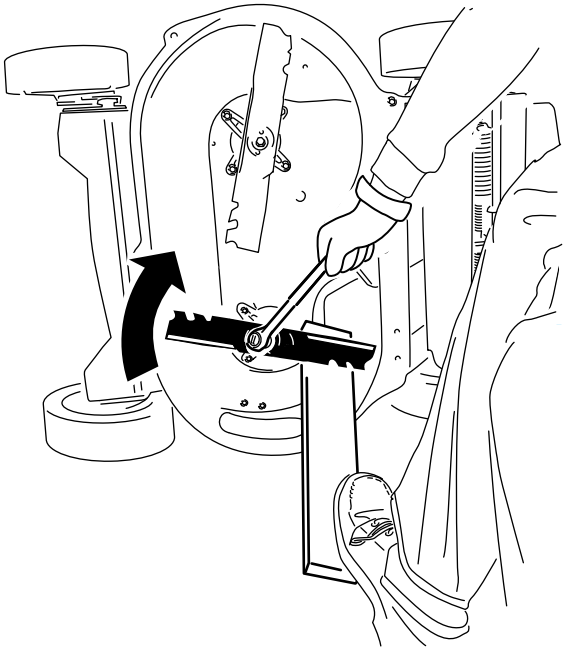

g232801

Figure 36

3. Rotate the installed blade 1/4 turn until it is vertical, and install the other blade in the same manner as the first (refer to step 1).

   Note: The blades should be perpendicular, forming an inverted “T” as shown in Figure 37.

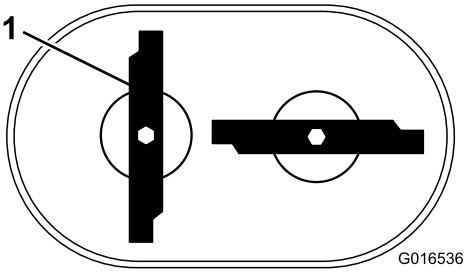

g016536

Figure 37

1. Blade (2)

4. Tighten the second blade; refer to step 2.
5. Rotate the blades by hand a full 360° turn to ensure that they do not touch.

   Note: If the blades touch each other, they are not mounted correctly. Repeat steps 1 through 3, until the blades no longer touch each other.

⚠ WARNING

Incorrectly installing the blades could damage the machine or cause an injury to you or bystanders.

Use care when installing the blades.

Storage

Store the machine in a cool, clean, dry place.

General Information

1. Perform the recommended annual maintenance procedures; refer to Maintenance (page 19).
2. Clean under the machine housing; refer to Cleaning under the Machine (page 18).
3. Remove chaff, dirt, and grime from the external parts of the engine, the shrouding, and the top of the machine.
4. Check the condition of the blades; refer to Inspecting the Blades (page 23).
5. Service the air filter; refer to Servicing the Air Filter (page 20).
6. Tighten all nuts, bolts, and screws.
7. Touch up all rusted or chipped paint surfaces with paint available from an Authorized Service Dealer.
8. **Electric-start model only:** Charge the battery for 24 hours, then unplug the battery charger and store the machine in an unheated area. If you must store the machine in a heated area, you must charge the battery every 90 days.
9. Fold the handle for storage.

Preparing the Fuel System

⚠ WARNING

Fuel can vaporize if you store it over long periods of time and explode if it comes into contact with an open flame.

- **Do not store fuel over long periods of time.**
- **Do not store the machine with fuel in the fuel tank or the carburetor in an enclosure with an open flame. (For example, a furnace or a water heater pilot light.)**
- **Allow the engine to cool before storing it in any enclosure.**

On the last refueling of the year, add fuel stabilizer to the fuel as directed by the engine manufacturer. Empty the fuel tank when mowing the last time before storing the machine.

1. Run the machine until the engine shuts off from running out of fuel.
2. Start the engine again and allow it to run until it shuts off. When you can no longer start the engine, it is sufficiently dry.

Preparing the Engine

1. While the engine is still warm, change the engine oil; refer to Changing the Engine Oil (page 20).
2. Disconnect the wire from the spark plug and remove the ignition key (electric-start model only).
3. Remove the spark plug.
4. Using an oil can, add about 30 ml (1 fl oz), of motor oil to the engine through the spark-plug hole.
5. Slowly pull the starter rope several times to distribute oil throughout the cylinder.
6. Install the spark plug but do not connect the wire to the spark plug. Secure the wire so that it does not come into contact with the spark plug.

Removing the Machine from Storage

1. Unfold the handle; refer to 1 Assembling and Unfolding the Handle (page 5).
2. Check and tighten all fasteners.
3. Remove the spark plug and spin the engine rapidly using the starter to blow excess oil from the cylinder.
4. Inspect the spark plug and replace it if it is dirty, worn, or cracked; refer to the engine owner's manual.
5. Install the spark plug and tighten it to the recommended torque of 20 N·m (15 ft-lb).
6. Perform any needed maintenance procedures; refer to Maintenance (page 19).
7. Check the engine-oil level; refer to Checking the Engine-Oil Level (page 10).
8. Fill the fuel tank with fresh fuel; refer to Filling the Fuel Tank (page 9).
9. Connect the wire to the spark plug.

Notes:



Count on it.