Form No. 3404-825 Rev D

TORO®

Count on it.

# Operator's Manual

# Multi Pro® 5800-D Turf Sprayer

**Model No. 41593—Serial No. 316000001 and Up**

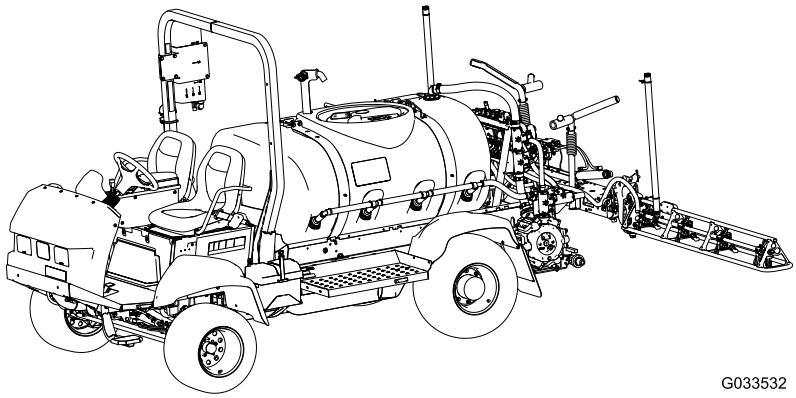

G033532

Register at www.Toro.com.
Original Instructions (EN)

CE

*3404-825* D

The Multi Pro® turf sprayer is a dedicated turf spray application vehicle and is intended to be used by professional, hired operators in commercial applications. It is primarily designed for spraying on well-maintained lawns in parks, golf courses, sports fields, and on commercial grounds.

This product complies with all relevant European directives; for details, please see the separate product specific Declaration of Conformity (DOC) sheet.

**⚠ WARNING**

**CALIFORNIA**
**Proposition 65 Warning**

**This product contains a chemical or chemicals known to the State of California to cause cancer, birth defects, or reproductive harm.**

**Diesel engine exhaust and some of its constituents are known to the State of California to cause cancer, birth defects, and other reproductive harm.**

**Use of this product may cause exposure to chemicals known to the State of California to cause cancer, birth defects, or other reproductive harm.**

It is a violation of California Public Resource Code Section 4442 or 4443 to use or operate the engine on any forest-covered, brush-covered, or grass-covered land unless the engine is equipped with a spark arrester, as defined in Section 4442, maintained in effective working order or the engine is constructed, equipped, and maintained for the prevention of fire.

**The enclosed *Engine Owner's Manual* is supplied for information regarding the US Environmental Protection Agency (EPA) and the California Emission Control Regulation of emission systems, maintenance, and warranty. Replacements may be ordered through the engine manufacturer.**

# Introduction

Read this manual carefully to learn how to operate and maintain your product properly. The information in this manual can help you and others avoid injury and product damage. Although Toro designs and produces safe products, you are responsible for operating the product properly and safely. You may contact Toro directly at www.Toro.com for product safety and operation training materials, accessory information, help finding a dealer, or to register your product.

Whenever you need service, genuine Toro parts, or additional information, contact an Authorized Service Dealer or Toro Customer Service and have the model and serial numbers of your product ready. Figure 1 illustrates the location of the model and serial numbers on the product.

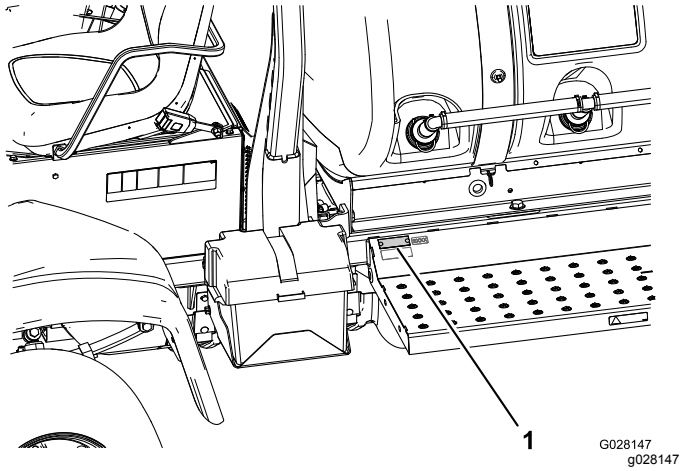


**Figure 1**

1. Location of the model and serial numbers

**Model No.** _____

**Serial No.** _____

This manual identifies potential hazards and has safety messages identified by the safety-alert symbol (Figure 2), which signals a hazard that may cause serious injury or death if you do not follow the recommended precautions.




**Figure 2**

1. Safety-alert symbol

This manual uses 2 words to highlight information. **Important** calls attention to special mechanical information and **Note** emphasizes general information worthy of special attention.

**© 2018—The Toro® Company**
**8111 Lyndale Avenue South**
**Bloomington, MN 55420**



**Contact us at www.Toro.com.**
**Printed in the USA**
**All Rights Reserved**

# Contents


Safety ..... 4
Safe Operating Practices ..... 4
Chemical Safety ..... 5
While Operating ..... 6
Maintenance ..... 7
Sound Power ..... 8
Sound Pressure ..... 8
Hand-Arm Vibration ..... 8
Whole Body Vibration ..... 8
Safety and Instructional Decals ..... 9
Setup ..... 15
1 Checking the Boom-Hinge Springs ..... 16
2 Removing the Shipping Bumper ..... 17
Product Overview ..... 18
Controls ..... 19
Specifications ..... 23
Operation ..... 24
Think Safety First ..... 24
Performing Pre-Starting Checks ..... 24
Preparing to Drive the Machine ..... 24
Preparing to Use the Sprayer ..... 25
Operating the Machine ..... 27
Breaking in a New Sprayer ..... 28
Operating the Sprayer ..... 28
Filling the Fresh-Water Tank ..... 29
Filling the Spray Tank ..... 29
Operating the Booms ..... 30
Using the InfoCenter LCD Display ..... 31
Applying Spray ..... 41
Taking Proper Turf Care Precautions while Operating in Stationary Modes ..... 41
Spraying Tips ..... 41
Unclogging a Nozzle ..... 42
Selecting a Nozzle ..... 42
Cleaning the Sprayer ..... 42
Setting the Boom-Section-Bypass Valves ..... 43
Positioning the Agitation-Bypass-Valve Knob ..... 44
Calibrating the Agitation-Bypass Valve ..... 44
Locating the Pump ..... 45
Towing the Sprayer ..... 45
Transporting the Sprayer ..... 46
Maintenance ..... 47
Recommended Maintenance Schedule(s) ..... 47
Daily Maintenance Checklist ..... 49
Notation for Areas of Concern ..... 49
Pre-Maintenance Procedures ..... 50
Raising the Sprayer ..... 50
Accessing the Engine ..... 50
Lubrication ..... 52
Greasing the Sprayer ..... 52
Greasing the Boom Hinges ..... 52
Greasing the Actuator-Rod Bearings ..... 53
Engine Maintenance ..... 54
Checking the Air Cleaner ..... 54
Servicing the Engine Oil ..... 56
Fuel System Maintenance ..... 58
Checking the Fuel Line and Connections ..... 58
Bleeding the Fuel System ..... 58
Bleeding Air from the Injectors ..... 59
Servicing the Fuel Filters ..... 60
Draining the Fuel Tank ..... 61
Electrical System Maintenance ..... 62
Replacing the Fuses ..... 62
Servicing the Battery ..... 62
Drive System Maintenance ..... 64
Inspecting the Wheels/Tires ..... 64
Changing the Planetary-Gearbox Fluid ..... 64
Adjusting the Front Wheel Toe-in ..... 65
Cooling System Maintenance ..... 66
Servicing the Cooling System ..... 66
Brake Maintenance ..... 67
Adjusting the Brakes ..... 67
Belt Maintenance ..... 68
Servicing the Alternator Belt ..... 68
Hydraulic System Maintenance ..... 69
Hydraulic Fluid Specification ..... 69
Checking the Hydraulic Fluid ..... 69
Servicing the Hydraulic Fluid ..... 70
Sprayer System Maintenance ..... 72
Inspecting the Hoses ..... 72
Changing the Pressure Filter Screen ..... 72
Spray System Schematic ..... 74
Pump Maintenance ..... 75
Adjusting the Actuators ..... 75
Inspecting the Nylon Pivot Bushings ..... 76
Software Maintenance ..... 76
Programming the Machine Settings ..... 76
Cleaning ..... 78
Cleaning the Radiator-Cooling Fins ..... 78
Cleaning the Agitation and Section Valves ..... 78
Storage ..... 84
Troubleshooting ..... 86

# Safety

Improper use or maintenance by the operator or owner can result in injury. To reduce the potential for injury, comply with these safety instructions and always pay attention to the safety-alert symbol, which means Caution, Warning, or Danger. Failure to comply with the instruction may result in personal injury or death.

The machine meets the requirements of SAE J2258.

# Safe Operating Practices

***Important:*** **Important: The machine is designed primarily as an off-road vehicle and is not intended for extensive use on public roads. When using the machine on public roads, follow all traffic regulations and use any additional accessories that may be required by law, such as lights, turn signals, slow-moving-vehicle (SMV) sign, and others as required.**

The Multi Pro® 5800 Turf Sprayer was designed and tested to offer safe service when operated and maintained properly. Although hazard control and accident prevention partially are dependent upon the design and configuration of the machine, these factors are also dependent upon the awareness, concern, and proper training of the personnel involved in the operation, maintenance and storage of the machine. Improper use or maintenance of the machine can result in injury or death.

The attachments that adapt to the Multi Pro® 5800 Turf Sprayer are not covered in this manual. See the specific operator's manual or installation instructions provided with each attachment for additional safety instructions. Read these manuals.

To reduce the potential for injury or death, comply with the following safety instructions:

## Supervisor's Responsibilities

- Make sure that operators are thoroughly trained and familiar with the *Operator's Manual*, engine owner's manual, and all labels on the sprayer.
- Establish your own special procedures and work rules for unusual operating conditions (e.g., slopes too steep for sprayer operation).

## Training

- Read the *Operator's Manual* and other training material before operating the machine.

  **Note:** If the operator(s) or mechanic(s) cannot read the manual language, it is the owner's responsibility to explain this material to them.
- Become familiar with the safe operation of the equipment, operator controls, and safety signs.
- All operators and mechanics should be trained. The owner is responsible for training the users.
- Never allow untrained people to operate or service the equipment.

  **Note:** Local regulations may restrict the age of the operator.
- The owner/operator can prevent and is responsible for accidents or injuries occurring to other people, or damage to property.

## Before Operating

- Operate the machine only after reading and understanding the contents of this manual.
- Never allow children to operate the sprayer.
- Make sure that all operators are physically capable of operating the sprayer.
- This sprayer is designed to carry the operator and 1 passenger in the seat provided by the manufacturer. Never carry any additional passengers on the sprayer.
- Never operate the sprayer when ill, tired, or under the influence of drugs or alcohol.
- Become familiar with the controls and know how to shut off the engine quickly.
- Keep all shields, safety devices, and decals in place. If a shield, safety device, or decal is malfunctioning, illegible, or damaged, repair or replace it before operating the machine.
- Wear appropriate clothing including safety glasses, long pants, substantial slip-resistant footwear, gloves, and hearing protection. Do not wear loose fitting clothing. Do not wear jewelry. Tie back long hair. See Chemical Safety (page 5) for PPE requirements.

**⚠ CAUTION**

**This machine produces sound levels in excess of 85 dBA at the operator's ear and can cause hearing loss through extended periods of exposure.**

**Wear hearing protection when operating this machine.**

- Operate only in daylight or good artificial light.
- Never spray while people, especially children or pets are nearby.
- Before operating the sprayer, always check the designated areas of the sprayer that are stated in

Performing Pre-Starting Checks (page 24). If the machine does not function correctly or is damaged in any way, do not use the sprayer. Make sure that the problem is corrected before the sprayer or attachment is operated.

- Make sure that the operator and passenger areas are clean and free from chemical residue and debris buildup.
- Ensure that all fluid-line connectors are tight and all hoses are in good condition before applying pressure to the system.

  **Note:** Do not use the sprayer if it is leaking or damaged.

# Chemical Safety

**⚠ WARNING**

**Chemical substances used in the spreader-sprayer system may be hazardous and toxic to you, bystanders, animals, plants, soils or other property.**

- **Carefully read and follow the chemical warning labels and material safety data sheets (MSDS) for all chemicals used and protect yourself according to the chemical manufacturer's recommendations. Ensure that as little skin as possible is exposed while using chemicals. Use appropriate personal protective equipment (PPE) to guard against personal contact with chemicals, such as the following:**
  - **safety glasses, goggles, and/or face shield**
  - **respirator or filter mask**
  - **chemical resistant gloves**
  - **rubber boots or other substantial footwear**
  - **hearing protection**
  - **keep on hand a clean change of clothes, soap, and disposable towels in the event of a chemical spill.**
- **Keep in mind that there may be more than 1 chemical used, and information on each chemical should be assessed.**
- **Refuse to operate or work on the sprayer if this information is not available.**
- **Before working on a sprayer system, make sure that the system has been triple rinsed and neutralized according to the recommendations of the chemical manufacturer(s) and all the valves have been cycled 3 times.**
- **Verify there is an adequate supply of clean water and soap nearby, and immediately wash off any chemicals that contact you.**
- Obtain proper training before using or handling chemicals.
- Use the correct chemical for the job.
- Follow the chemical manufacturer's instructions for the safe application of the chemical. Do not exceed recommended system application pressure.
- Do not fill, calibrate, or clean the unit when people, especially children, or pets are in the area.

- Handle chemicals in a well-ventilated area.
- Have clean water available especially when filling the spray tank.
- Do not eat, drink, or smoke while working with chemicals.
- Do not clean spray nozzles by blowing through them or placing in mouth.
- Always wash your hands and other exposed areas as soon as possible after you finish working with chemicals.
- Keep chemicals in their original packages and stored in a safe location.
- Properly dispose of unused chemicals and chemical containers as instructed by the chemical manufacturer and your local codes.
- Chemicals and fumes are dangerous; never enter the tank or place your head over or in the opening of a tank.
- Follow all local, state, federal regulations for spreading or spraying chemicals.

# While Operating

**⚠ WARNING**

**Engine exhaust contains carbon monoxide, which is an odorless, deadly poison that can kill you.**

**Do not run the engine indoors or in an enclosed area.**

- The operator (and passenger) should remain seated whenever the sprayer is in motion. The operator should keep both hands on the steering wheel whenever possible. Keep your arms and legs within the sprayer body at all times.
- Failure to operate the sprayer safely may result in an accident, tip over of the sprayer, and serious injury or death. Drive carefully. To prevent tipping or loss of control:
  - Use extreme caution, reduce speed, and maintain a safe distance around sand traps, ditches, creeks, ramps, unfamiliar areas, or any areas that have abrupt changes in ground conditions or elevation.
  - Watch for holes or other hidden hazards.
  - Use extra caution when operating the sprayer on wet surfaces, in adverse weather conditions, at higher speeds, or with a full load. Stopping time and distance increases with a full load.
  - Avoid sudden stops and starts. Do not go from reverse to forward or forward to reverse without first coming to a complete stop.
  - Slow down before turning. Do not attempt sharp turns or abrupt maneuvers or other unsafe driving actions that may cause a loss of sprayer control.
  - Before backing up, look to the rear and ensure that no one is behind you. Back up slowly.
  - Watch out for traffic when you are near or crossing roads. Always yield the right of way to pedestrians and other vehicles. This sprayer is not designed for use on streets or highways. Always signal your turns or stop early enough so that other people know what you plan to do. Obey all traffic rules and regulations.
  - The electrical and exhaust systems of the sprayer can produce sparks capable of igniting explosive materials. Never operate the sprayer in or near an area where there is dust or fumes in the air which are explosive.
  - If you are ever unsure about safe operation, stop work and ask your supervisor.
- Do not touch the engine or muffler while the engine is running or soon after it has stopped. These areas may be hot enough to cause burns.
- If the machine ever vibrates abnormally, stop immediately, wait for all motion to stop, and inspect the sprayer for damage. Repair all damage before resuming operation.
- Before getting off the seat, do the following:
  1. Stop the machine.
  2. Remove your foot from the traction pedal and set the parking brake.
  3. Shut off the engine by rotating the key for the starter switch to the OFF position.
  4. Remove the key from the starter switch.

  ***Important:*** **Do not park the machine on an incline.**
- Lightning can cause severe injury or death. If lightning is seen or thunder is heard in the area, do not operate the machine; seek shelter.

## Braking

- Slow down before you approach an obstacle. This gives you extra time to stop or turn away. Hitting an obstacle can damage the sprayer and its contents. More important, it can injure you.
- Gross Vehicle Weight (GVW) has a major impact on your ability to stop and/or turn. Heavy loads and attachments make a sprayer harder to stop or turn. The heavier the load, the longer it takes to stop.
- Turf and pavement are much more slippery when they are wet. It can take 2 to 4 times as long to stop on wet surfaces as on dry surfaces. If you drive through standing water deep enough to get

the brakes wet, they will not work well until they are dry. After driving through water, you should test the brakes to make sure that they work properly. If they do not, drive slowly while putting light pressure on the brake pedal to dry the brakes.

## ROPS Safety

**Note:** For each machine covered in this *Operator's Manual*, a cab installed by Toro is a ROPS.

- Do not remove the ROPS from the machine.
- Fasten the seat belt and ensure that you can release it quickly in an emergency. Always wear your seat belt when the roll bar is up or on a machine with a cab installed by Toro.
- Check carefully for overhead obstructions and do not contact them.
- Keep the ROPS in safe operating condition by thoroughly inspecting it periodically for damage and keeping all the mounting fasteners tight.
- Replace any damaged ROPS component. Do not repair or alter it.

## Operating on Hills and Rough Terrain

Operating the sprayer on a hill may cause tipping or rolling of the sprayer, or the engine may stall and you could lose headway on the hill. This could result in personal injury.

- Do not accelerate quickly or suddenly apply the brakes when backing down a hill, especially with a load.
- Never drive across a steep hill; always drive straight up or down or go around the hill.
- If the engine stalls or you begin to lose headway while climbing a hill, gradually apply the brakes and slowly back straight down the hill.
- Turning while traveling up or down hills can be dangerous. If you have to turn while on a hill, do it slowly and cautiously. Never make sharp or fast turns.
- Heavy loads affect stability. Reduce the weight of the load and your speed when operating on hills.
- Avoid stopping on hills, especially with a load. Stopping while going down a hill takes longer than stopping on level ground. If you must stop the sprayer, avoid sudden speed changes, which may initiate tipping or rolling of the sprayer. Do not suddenly apply the brakes when rolling backward, as this may cause the sprayer to overturn.
- Reduce speed and load when operating on rough terrain, uneven ground, and near curbs, holes, and other sudden changes in terrain. Loads may shift, causing the sprayer to become unstable.

**⚠ WARNING**

**Sudden changes in terrain may cause abrupt steering wheel movement, possibly resulting in hand and arm injuries.**

**Use care when driving the machine in terrain that changes abruptly.**

- Grip the steering wheel loosely around the perimeter. Keep your hands clear of the steering wheel spokes.

## Loading the Liquid

The weight of the cargo can change the sprayer center of gravity and sprayer handling. To avoid loss of control and personal injury, follow these guidelines:

- Liquid loads can shift. This shifting happens most often while turning, going up or down hills, suddenly changing speeds, or while driving over rough surfaces. Shifting loads can cause the sprayer to tip over.
- When operating with a heavy load, reduce your speed and allow for sufficient braking distance. Do not suddenly apply the brakes. Use extra caution on slopes.
- Be aware that heavy loads increase your stopping distance and reduce your ability to turn quickly without tipping over.

# Maintenance

- Only permit qualified and authorized personnel to maintain, repair, adjust, or inspect the sprayer.
- Before performing any maintenance, ensure that the system has been thoroughly rinsed and cleaned.
- Before servicing or making adjustments to the machine, shut off the engine, set the parking brake, and remove the key to prevent someone from accidentally starting the engine.
- To make sure that the entire machine is in good condition, keep all nuts, bolts, and screws properly tightened.
- To reduce the potential for fire, keep the engine area free of excessive grease, grass, leaves, and dirt.
- Never use an open flame to check the level or leakage of fuel or battery electrolyte.
- If the engine must be running to perform a maintenance adjustment, keep your hands, feet, clothing, and any parts of your body away from the engine and any moving parts. Keep everyone away.

- Do not use open pans of fuel or flammable cleaning fluids when cleaning parts.
- Do not adjust the traction control speed. To ensure safety and accuracy, have an Authorized Toro Distributor check the ground speed.
- Keep your body and hands away from pin-hole leaks or nozzles that eject high-pressure fluid. Use cardboard or paper to find leaks. Fluid escaping under pressure can penetrate skin and cause injury, requiring surgery within a few hours by a qualified surgeon; otherwise gangrene may result.
- If major repairs are ever needed or assistance is required, contact an Authorized Toro Distributor.
- To be sure of optimum performance and safety, always purchase genuine Toro replacement parts and accessories. Replacement parts and accessories made by other manufacturers could be dangerous. Altering this sprayer in any manner that may affect sprayer operation, performance, durability, or its use, may result in injury or death. Such use could void the product warranty.

# Sound Power

This unit has a guaranteed sound power level of 99 dBA, which includes an Uncertainty Value (K) of 1 dBA.

Sound power level was determined according to the procedures outlined in ISO 11094.

# Sound Pressure

This unit has a sound pressure level at the operator's ear of 85 dBA, which includes an Uncertainty Value (K) of 1 dBA.

Sound pressure level was determined according to the procedures outlined in EN ISO 11201.

# Hand-Arm Vibration

Measured vibration level for right hand = 0.8 $m/s^2$

Measured vibration level for left hand = 0.8 $m/s^2$

Uncertainty Value (K) = 0.4 $m/s^2$

Measured values were determined according to the procedures outlined in EN ISO 20643.

# Whole Body Vibration

Measured vibration level = 0.3 $m/s^2$

Uncertainty Value (K) = 0.14 $m/s^2$

Measured values were determined according to the procedures outlined in EN 1032.

# Safety and Instructional Decals

Safety decals and instructions are easily visible to the operator and are located near any area of potential danger. Replace any decal that is damaged or missing.

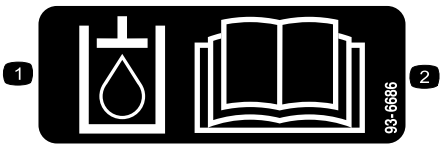


decal93-6686

**93-6686**

1. Hydraulic fluid
2. Read the *Operator's Manual*.

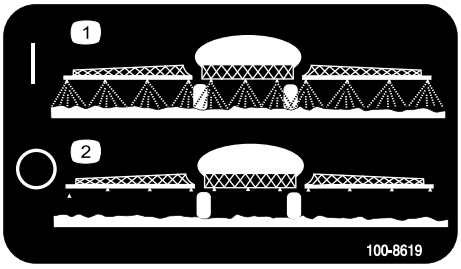


decal100-8619

**100-8619**

1. Spray on
2. Spray off

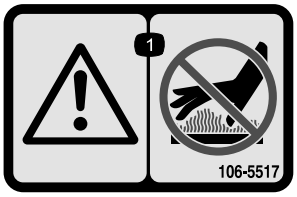


decal106-5517

**106-5517**

1. Warning—do not touch the hot surface.

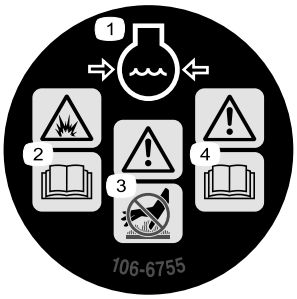


decal106-6755

**106-6755**

1. Engine coolant under pressure.
2. Explosion hazard—read the *Operator's Manual.*
3. Warning—do not touch the hot surface.
4. Warning—read the *Operator's Manual.*

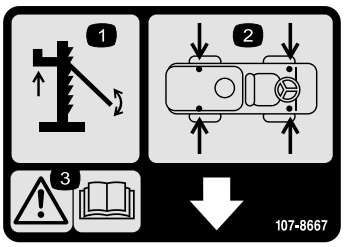


decal107-8667

**107-8667**

1. Jacking
2. Jack-point locations
3. Warning—Read the *Operator's Manual* for more information on jacking the vehicle




decal107-8722

**107-8722**

1. Engaging the parking brake—1) Push down on the parking-brake pedal; 2) Pull down on the parking-brake lever to lock the parking brake.

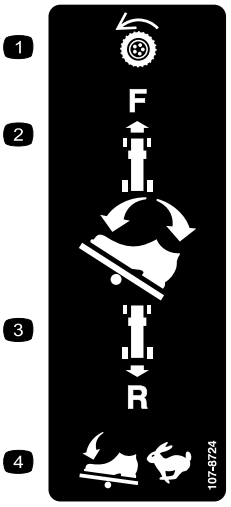


decal107-8724

**107-8724**

1. Traction drive
2. To drive forward, press the top of the traction pedal forward and down.
3. To drive in reverse, press the bottom of the pedal rearward and down.
4. Vehicle speed increases with more pedal pressure.

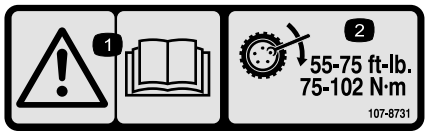


decal107-8731

**107-8731**

1. Warning—read the *Operator's Manual.*
2. Torque lug nuts to 75 to 102 N·m (55 to 75 ft-lb).

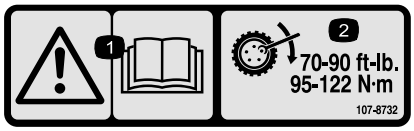


decal107-8732

**107-8732**

1. Warning—read the *Operator's Manual.*
2. Torque lug nuts to 95 to 122 N·m (75 to 90 ft-lb).




decal117-2718

**117-2718**




decal117-4955

**117-4955**

1. Warning—read the *Operator's Manual*; wear the seat belt when seated in the operator's position; avoid tipping the machine.
2. Warning—wear hearing protection.

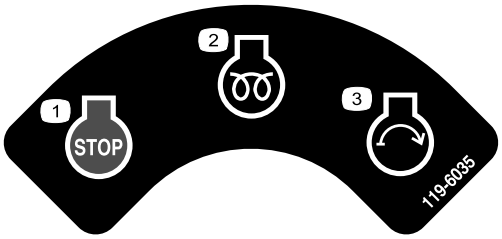


decal119-6035

**119-6035**

1. Engine—shut off
2. Engine—run, preheat
3. Engine—start

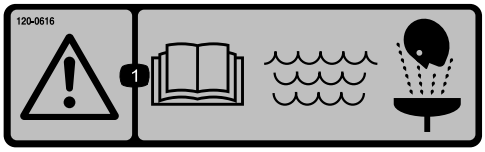


decal120-0616

**120–0616**

1. Warning—read the *Operator's Manual*; use fresh, clean water for first-aid washing.




decal120-0617

**120-0617**

1. Pinch point, hand—keep hands away from hinge.
2. Crushing hazard, boom—keep bystanders a safe distance away from the machine.

---




decal120-0622

**120-0622**

1. Warning—read the *Operator's Manual*.
2. Warning—do not enter the tank.
3. Caustic liquid/chemical burn and toxic gas inhalation hazards—wear hand, skin, eye, and respiratory protection.

---

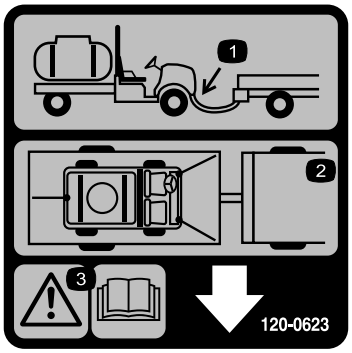


decal120-0623

**120-0623**

1. Tow hitch location
2. Tie down locations
3. Warning—Read the *Operator's Manual.*

---

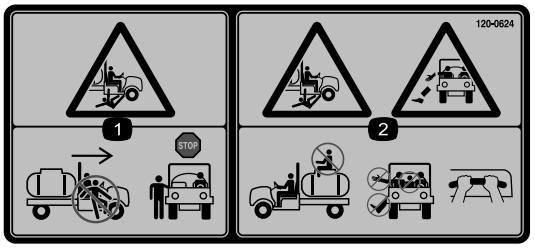


decal120-0624

**120-0624**

1. Crushing/dismemberment hazard of bystanders—do not exit or enter the machine while it is moving; stop the machine before entering or exiting.
2. Falling, crushing hazard—no riders on tank; keep arms and legs inside of the vehicle at all times, use passenger handholds.

---

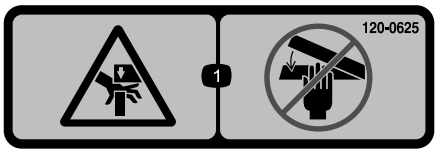


decal120-0625

**120-0625**

1. Pinch point, hand—keep hands away.

---

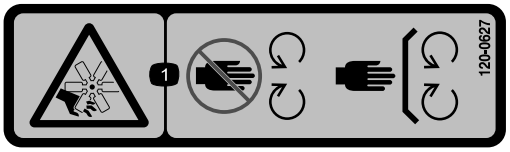


decal120-0627

**120-0627**

1. Cutting/dismemberment hazard, fan—stay away from moving parts, keep all guards and shields in place.

---




decal127-6976

**127-6976**

1. Decrease
2. Increase

---

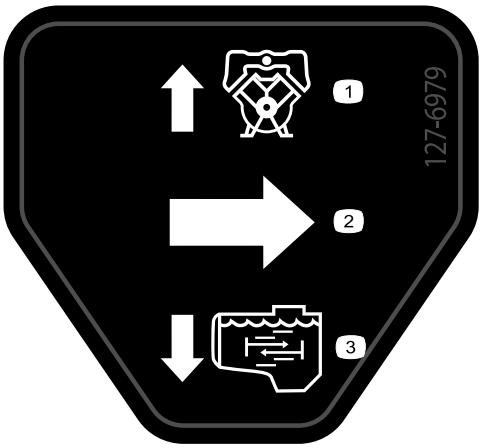


decal127-6979

**127-6979**

1. Pump-return flow
2. Flow
3. Agitation flow

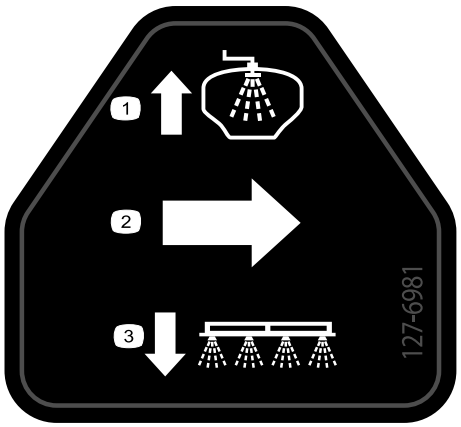


decal127-6981

**127-6981**

1. Bypass-return flow
2. Flow
3. Boom spray

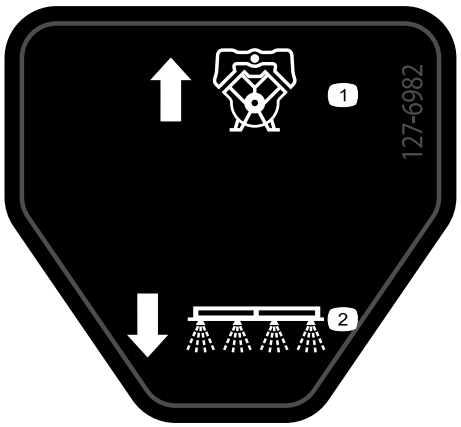


decal127-6982

**127-6982**

1. Pump return flow
2. Boom spray

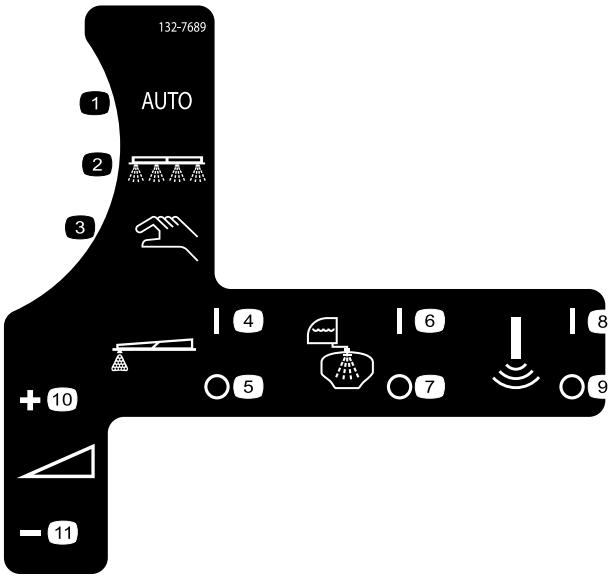


decal132-7689

**132-7689**

1. Auto
2. Spray mode
3. Manual spray mode
4. Foam marker—on
5. Foam marker—off
6. Rinse system—on
7. Rinse system—off
8. Sonic sensor—on
9. Sonic sensor—off
10. Application rate increase
11. Application rate decrease

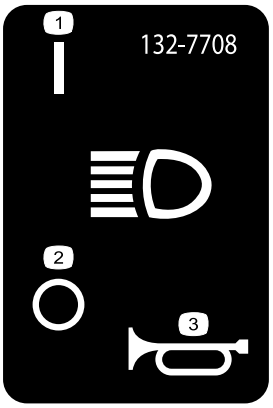


decal132-7708

**132-7708**

1. Headlight—on
2. Headlight—off
3. Horn

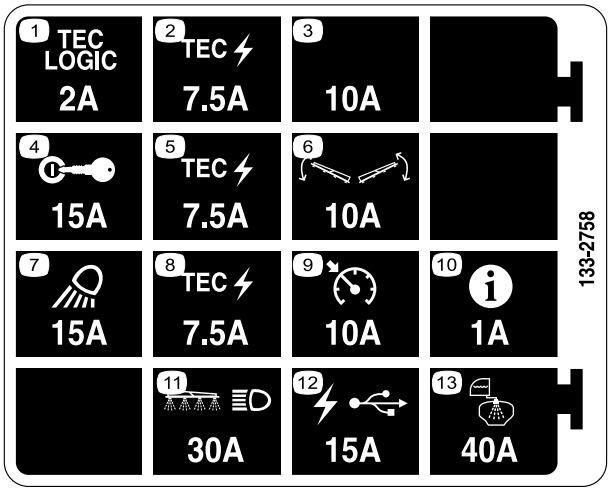


**133-2758**

1. Tec Logic—2 A
2. Tec power—7.5 A
3. Extra fuse slot—10 A
4. Ignition—15 A
5. Tec power—7.5 A
6. Boom control—10 A
7. Work light—15 A
8. Tec power—7.5 A
9. Cruise control—10 A
10. InfoCenter—1 A
11. Boom and headlight—30 A
12. USB power—15 A
13. Tank spray—40 A

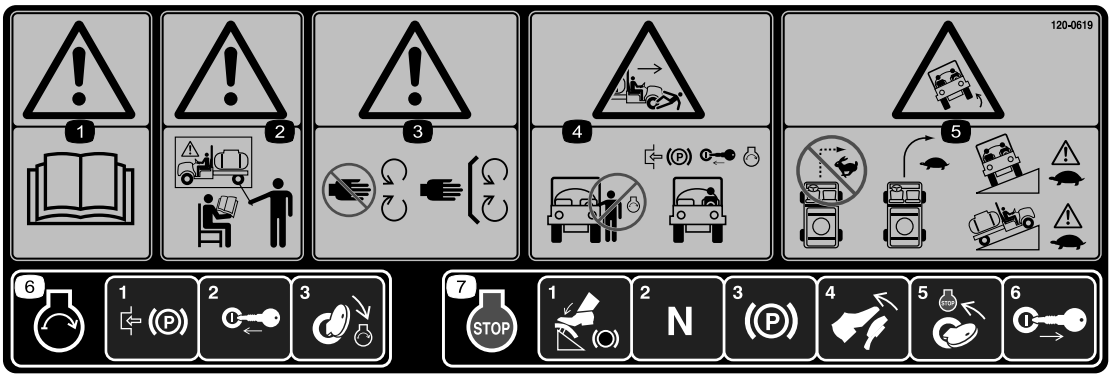


**120-0619**

1. Warning—read the *Operator's Manual*.
2. Warning—do not operate this machine unless you are trained.
3. Warning—stay away from moving parts, keep all guards and shields in place.
4. Crushing/dismemberment hazard of bystanders—do not start the engine while entering or exiting the vehicle; engage the parking brake, insert the key, and start the engine while seated in the driver's seat.
5. Tipping hazard—do not turn sharply while traveling fast, drive slowly when turning; use caution and drive slowly when traveling across or up and down slopes.
6. To start the engine, engage the parking brake, insert the ignition key, and turn it to the START position.
7. To shut off the engine, press the brake, ensure the traction pedal is in the Neutral position, set the parking brake, release the brake, and remove the key.

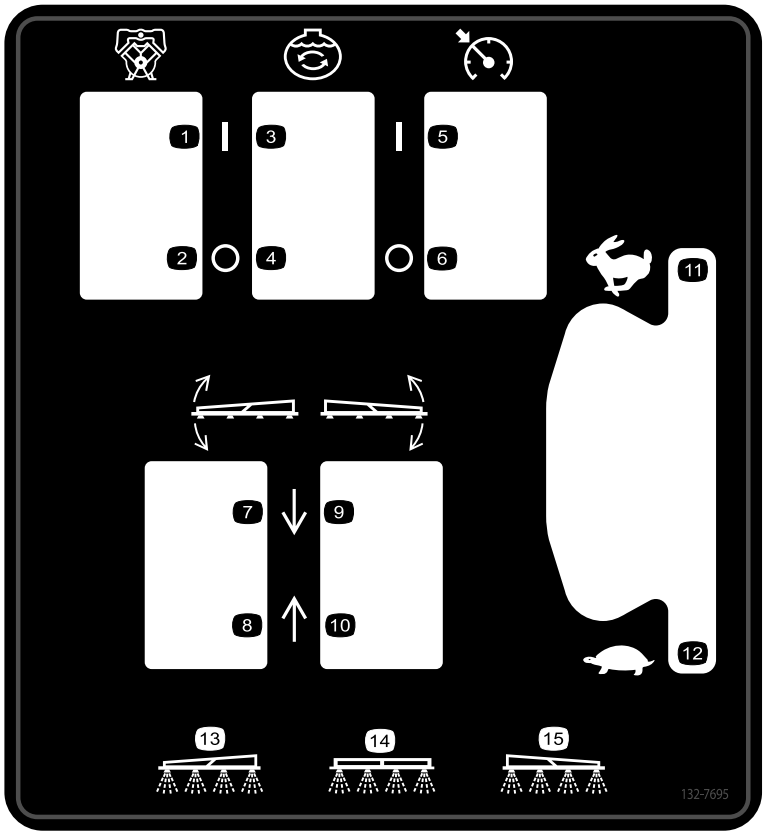


decal132-7695

**132-7695**

1. Pump—on
2. Pump—off
3. Agitation—on
4. Agitation—off
5. Speed control—on
6. Speed control—off
7. Lower the left boom.
8. Raise the left boom.
9. Lower the right boom.
10. Raise the right boom.
11. Engine speed—fast
12. Engine speed—slow
13. Left boom spray
14. Center boom spray
15. Right boom spray

---




decal132-7786

**132-7786**

1. Spray—off
2. Spray—on
3. USB

---

# Setup

## Loose Parts

Use the chart below to verify that all parts have been shipped.

| Procedure | Description | Qty. | Use |
|---|---|---|---|
| 1 | No parts required | – | Check the boom-hinge springs. |
| 2 | No parts required | – | Remove the shipping bumper. |

## Media and Additional Parts

| Description | Qty. | Use |
|---|---|---|
| Starter key | 2 | Read the manuals and watch the training materials before operating the machine. |
| Operator's Manual | 1 | |
| Engine owner's manual | 1 | |
| Parts Catalog | 1 | |
| Operator training materials | 1 | |
| Screen filter | 2 | |

**Note:** Determine the left and right sides of the machine from the normal operating position.

**Note:** If you have questions or need additional information regarding the spray control system, refer to the *Operator's Manual* supplied with the system.

***Important:*** **This sprayer is sold without nozzles.**

**To use the sprayer, *you must obtain and install nozzles*. Contact your Authorized Toro Distributor for information on the available boom kit and accessories.**

**After you install your nozzles and before using the sprayer for the first time, adjust the boom-bypass valves so that the pressure and application rate remains the same for all booms when you turn 1 or more booms off. Refer to Calibrating the Boom-Bypass Valves section in the Operation section.**

# 1

# Checking the Boom-Hinge Springs

**No Parts Required**

## Procedure

***Important:*** **Operating the spray system with the boom-hinge springs under the incorrect compression could damage the boom assembly. Measure the springs and use the jam nut to compress the springs to 3.96 cm (1.56 inches), if necessary.**

The sprayer may come with the boom extensions swung forward to facilitate packaging of the machine. The springs are not fully tightened at the time of manufacture to allow the booms to be in this position for shipping. Before operating the machine, adjust the springs to the correct compression.

1. If necessary, remove the packing components that secure the right and left extension booms during shipping.
2. Support the booms while they are extended to the spray position.
3. At the boom hinge, measure the compressed height of the upper and lower springs (Figure 3).

   **Note:** You must measure and adjust compressed-spring height while the booms in the extended (horizontal) position.

   A. Compress all springs until they measure 3.96 cm (1.56 inches).

   B. Use the jam nut (Figure 3) to compress all springs that measure greater than 3.96 cm (1.56 inches).

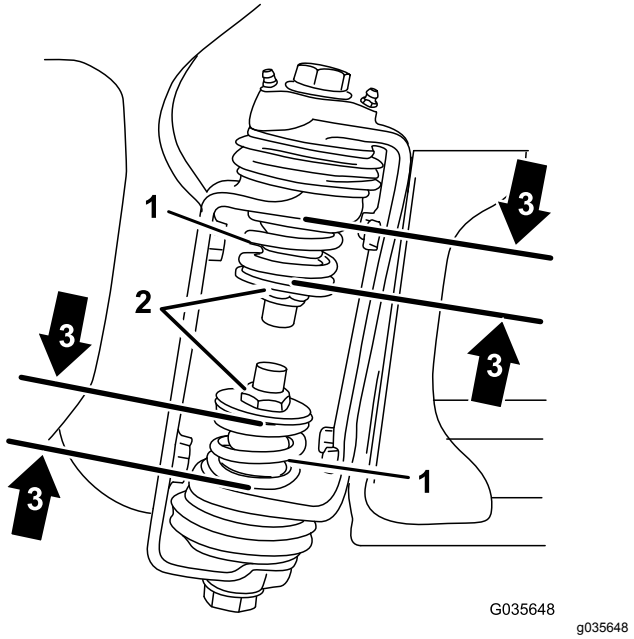


**Figure 3**

1. Boom-hinge spring
2. Jam nut
3. Compressed spring dimension 3.96 cm (1.56 inches)

4. Repeat the procedure for each spring at both outer-boom hinges.
5. Move the booms into the transport ‘X’ position; refer to Operating the Booms (page 30).

# 2

# Removing the Shipping Bumper

**No Parts Required**

## Procedure

1. Remove the bolts, washers, and nuts that secure the shipping bumper to the front chassis plate (Figure 4).

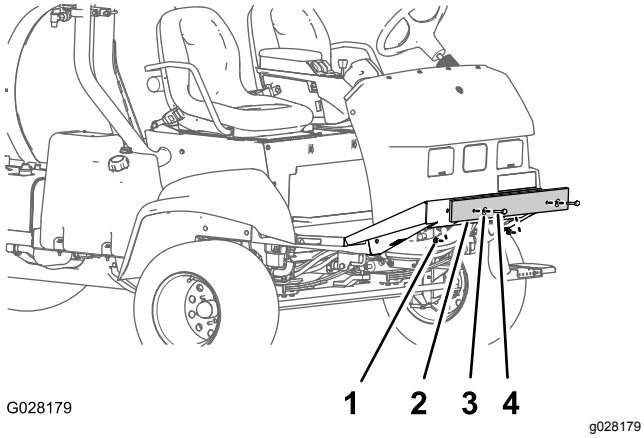


**Figure 4**

1. Nut
2. Shipping bumper
3. Washer
4. Bolt

2. Remove the shipping bumper from the machine (Figure 4).

   **Note:** Discard the bolts, washers, nuts, and shipping bumper.

# Product Overview

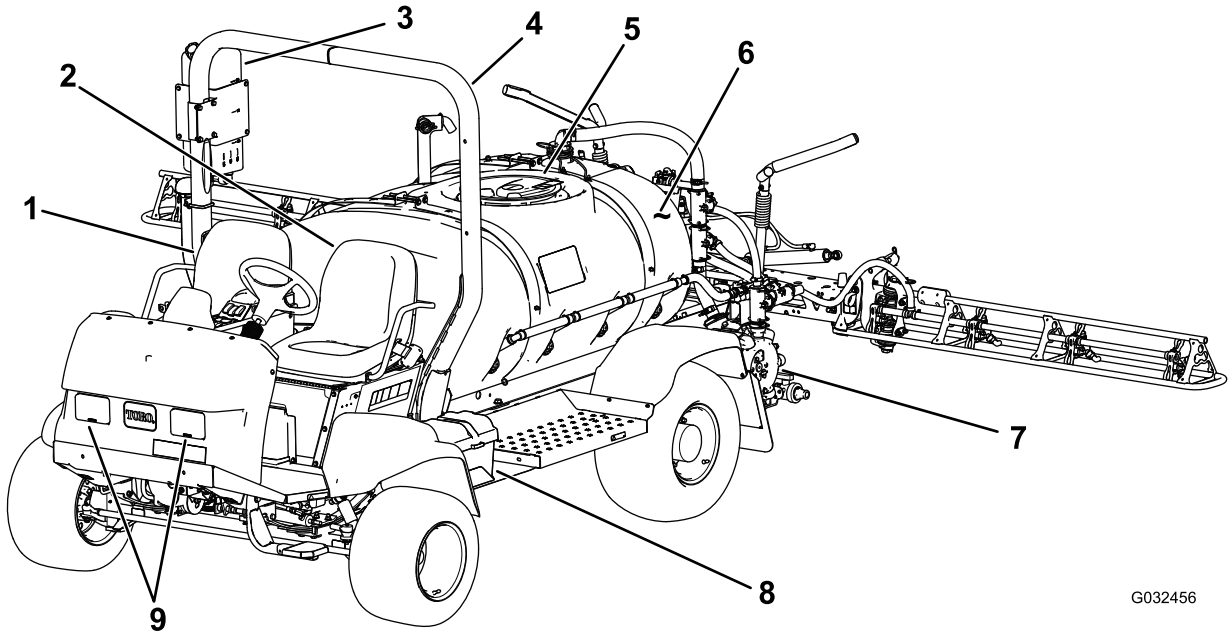


g032456

**Figure 5**

1. Passenger seat
2. Operator's seat
3. Fresh-water tank
4. Rollover Protection System (ROPS)
5. Tank lid
6. Chemical tank
7. Pump
8. Battery
9. Work lights

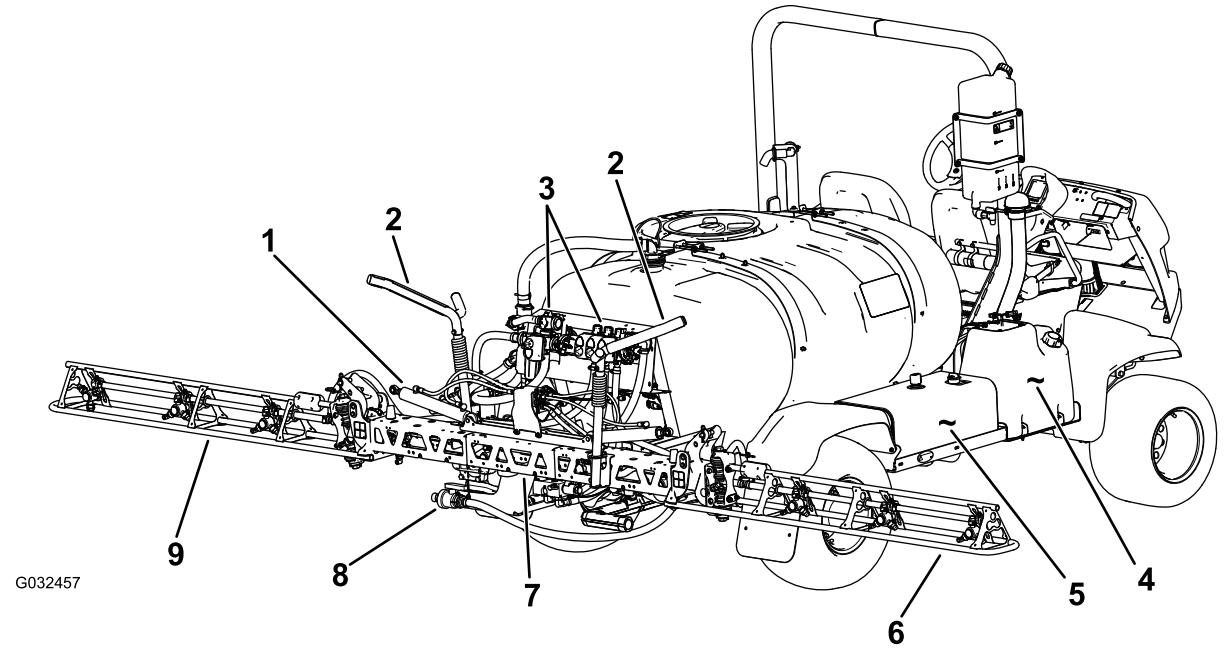


g032457

**Figure 6**

1. Boom-control cylinder
2. Boom-transport cradle
3. Valve manifolds
4. Fuel tank
5. Hydraulic tank
6. Right boom section
7. Center boom section
8. Tank-drain valve
9. Left boom section

# Controls

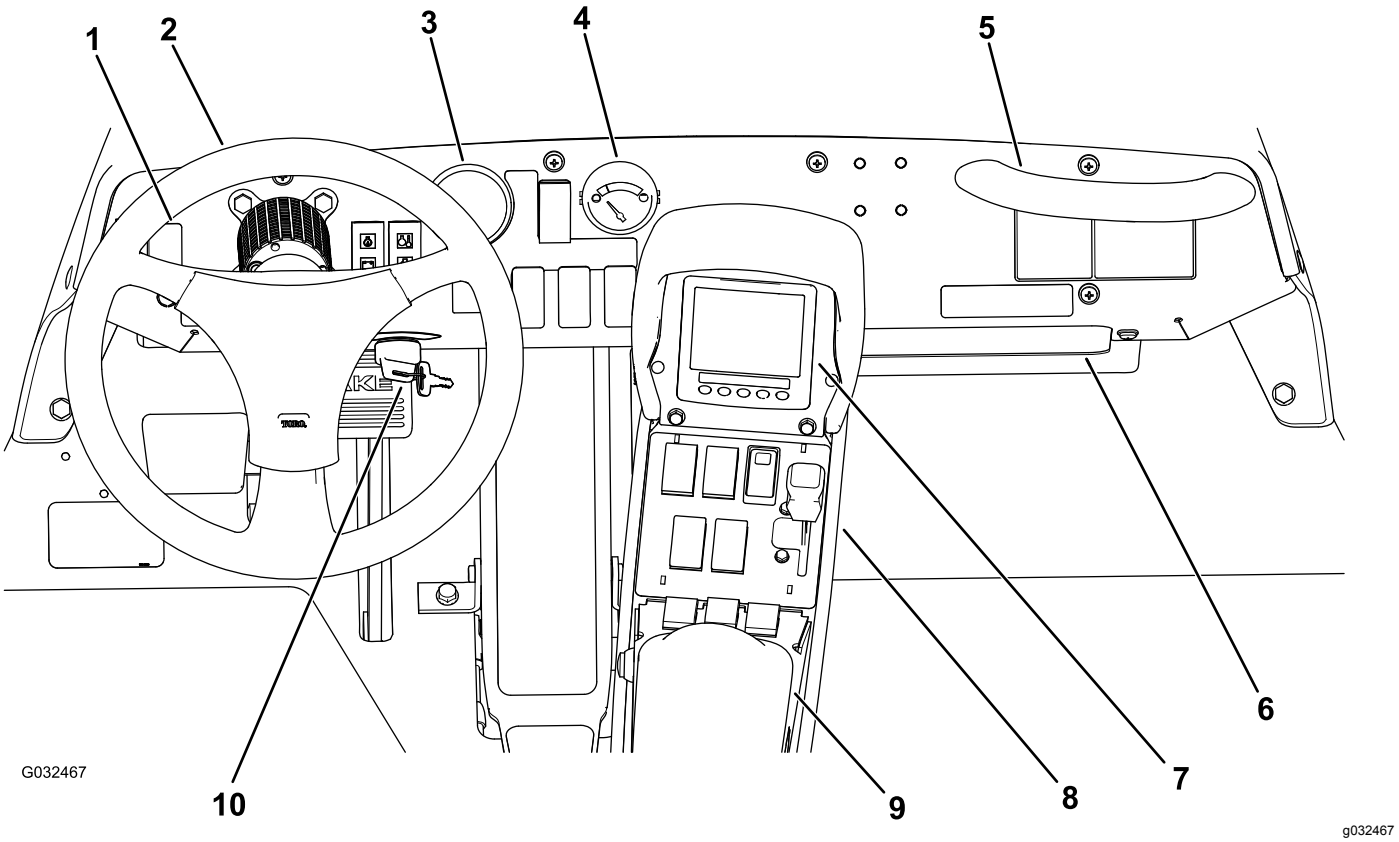


**Figure 7**

1. Work-light switch
2. Steering wheel
3. Pressure gauge
4. Fuel gauge
5. Passenger handhold
6. Storage compartment
7. InfoCenter
8. Quick Find™ console
9. Armrest
10. Ignition switch

## Vehicle Controls

### Traction Pedal

The traction pedal (Figure 8) controls the forward and reverse movement of the machine. Using the heel and toe of the right foot, press the top of the pedal to move forward or the bottom of the pedal to move the machine in reverse. Release the pedal to slow and stop the machine.

***Important:*** **Ensure that you allow the sprayer to come to a stop before switching between the FORWARD and the REVERSE positions.**

**Note:** The farther you press the pedal in either direction, the faster the sprayer travels. To obtain maximum forward speed, set the throttle lever to the FAST position and press the traction pedal fully forward.

**Note:** To get maximum power under heavy load or when ascending a hill, have the throttle in the FAST position while pressing the traction pedal slightly to keep the engine speed high. When the engine speed begins to decrease, release the traction pedal slightly to allow the engine speed to increase.

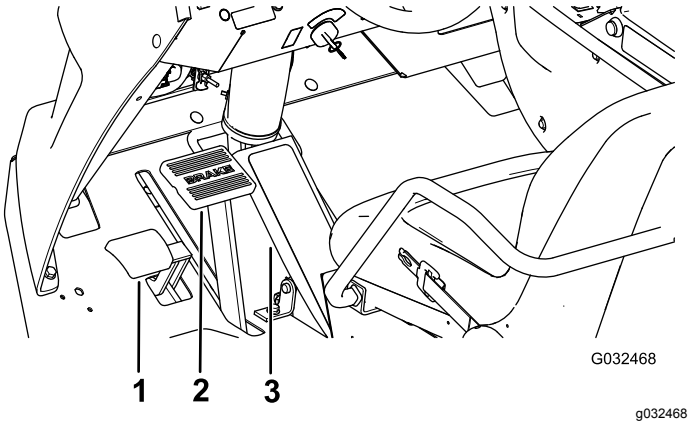


**Figure 8**

1. Parking-brake pedal
2. Brake pedal
3. Traction pedal

### Brake Pedal

Use the brake pedal to stop or slow the sprayer (Figure 8).

**⚠ CAUTION**

**If you operate the sprayer with poorly adjusted or worn brakes, you could lose control of the sprayer, resulting in serious injury or death to you or bystanders.**

**Always check the brakes before operating the sprayer and keep them properly adjusted and repaired.**

### Parking Brake

The parking brake is a pedal to the left of the brake (Figure 8). Engage the parking brake whenever you plan on leaving the seat to prevent the sprayer from accidently moving. To engage the parking brake, press the brake pedal and, while holding the brake, press the parking-brake pedal. To disengage, press and release the brake pedal. If the sprayer is parked on a steep grade, apply the parking brake and place blocks on the downhill side of the wheels.

### Ignition Switch

The ignition switch (Figure 8), used to start and shut off the engine, has 3 positions: OFF, ON/PREHEAT, and START.

### Speed-Lock Switch

The speed-lock switch locks the position of the traction pedal at the time that the switch is set (Figure 9). This ensures that the sprayer travels at a constant speed while you are driving the machine on level ground.

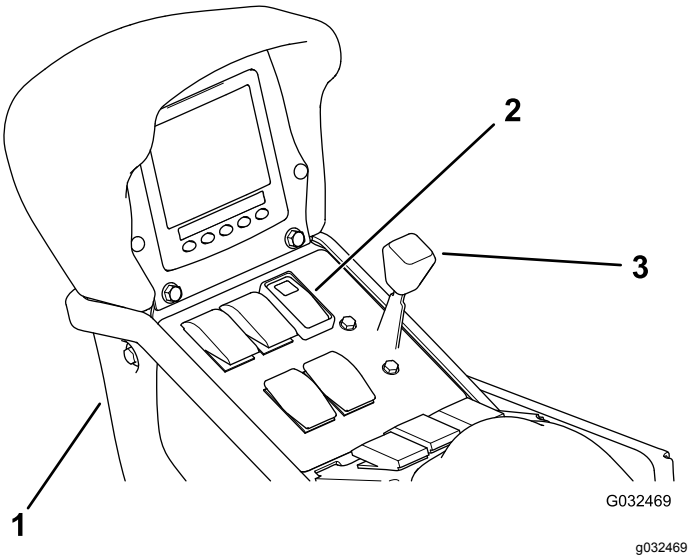


**Figure 9**

1. Center console
2. Speed-lock switch
3. Throttle lever

### Throttle Lever

The throttle lever, located on the control panel between the seats (Figure 9), controls the speed of the engine. Push the lever forward to increase the engine speed and pull it rearward to decrease the engine speed.

### Work-Light Switch

Toggle the switch to operate the work lights (Figure 7). Push it forward to turn the lights on and rearward to turn them off.

### Fuel Gauge

The fuel gauge on the dash of the machine and displays the level of the fuel in the tank (Figure 7).

# Sprayer Controls

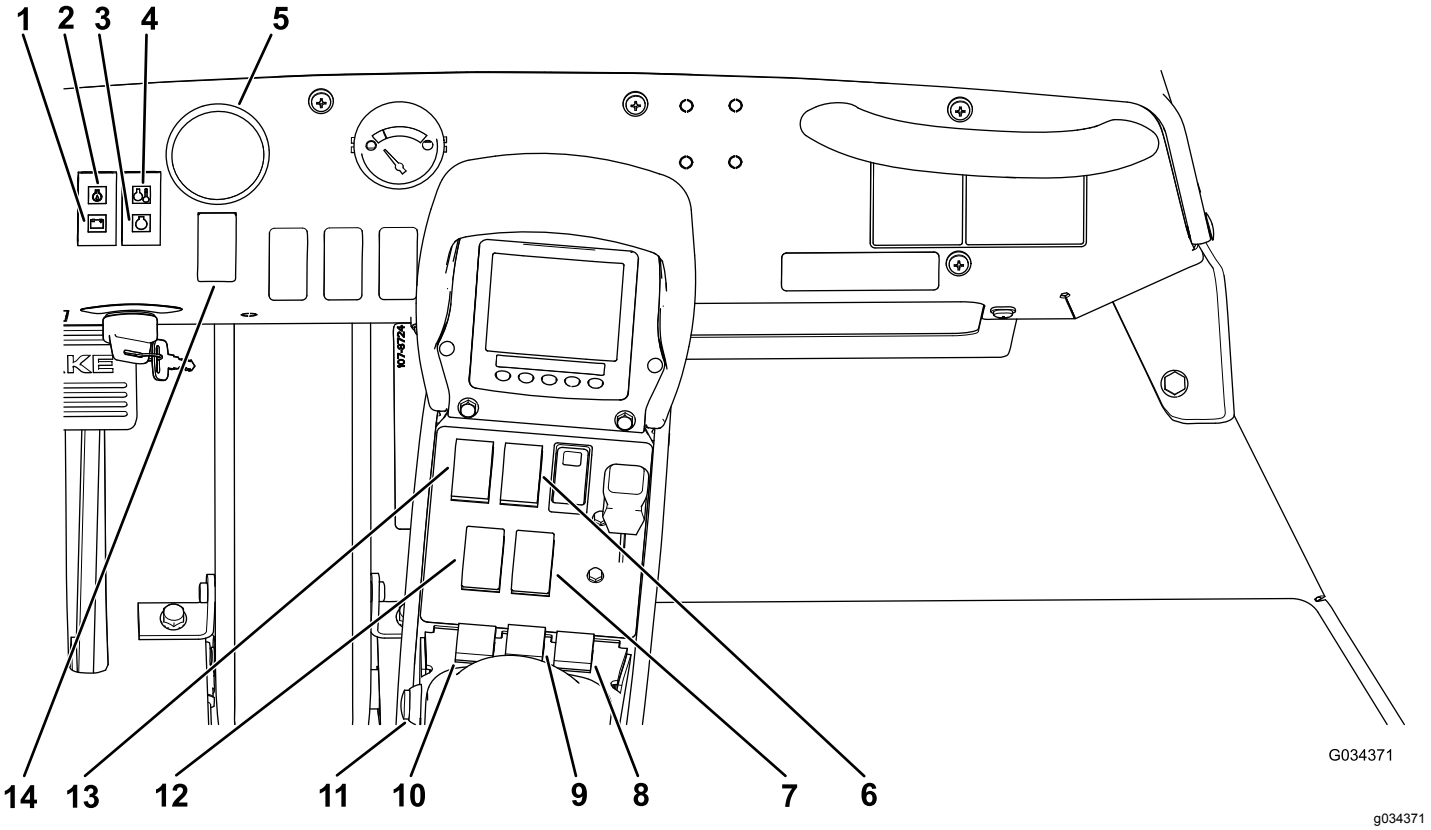


**Figure 10**

1. Battery-voltage-warning light
2. Oil-pressure-warning light
3. Glow-plug-warning light
4. Coolant-temperature-warning light
5. Pressure gauge
6. Tank-agitation switch
7. Right raise/lower-boom switch
8. Right boom switch
9. Center boom switch
10. Left boom switch
11. Master-boom switch
12. Left raise/lower-boom switch
13. Pump switch
14. Application-rate switch

### Application-Rate Switch

The application-rate switch is located on the dash to the right of the steering wheel (Figure 10). Press and hold the switch forward to increase the application rate (pressure), or press and hold it rearward to decrease the application rate (pressure).

### Pressure Gauge

The pressure gauge (Figure 10) is located on the dash. This gauge shows the pressure of the fluid in the spray system in kPa and psi.

### Master-Boom Switch

The master-boom switch is located on the left side of the armrest. It allows you to start or stop the spray operation. Press the switch to enable or disable the spray system.

### Boom-Section Switches

The boom-section switches are located on the center console in front of the armrest (Figure 10). Toggle each switch forward to turn the corresponding boom section on and rearward to turn each off. When the switch is in the ON position, an icon appears on the InfoCenter.

**Note:** These switches affect only the spray system when the master-boom switch is in the ON position.

### Pump Switch

The pump switch is located on the center console to the right of the seat (Figure 10). Toggle this switch forward to run the pump or rearward to stop the pump.

***Important:*** **Engage the pump only when the engine is at low idle to avoid damaging the pump drive.**

### Raise/Lower-Boom Switch

The raise/lower-boom switches are located on the center console to the right of the seat and used to raise or lower the left and right booms (Figure 10).

### Agitation Switch

The agitation switch is located on the center console to the right of the seat (Figure 10). Toggle this switch forward to turn on the agitation in the tank or rearward to stop the agitation. When you turn on the switch, a light on the switch illuminates. To operate the agitation function, run the sprayer-system pump and run the engine above low idle. The agitation valve is located behind the tank (Figure 11).

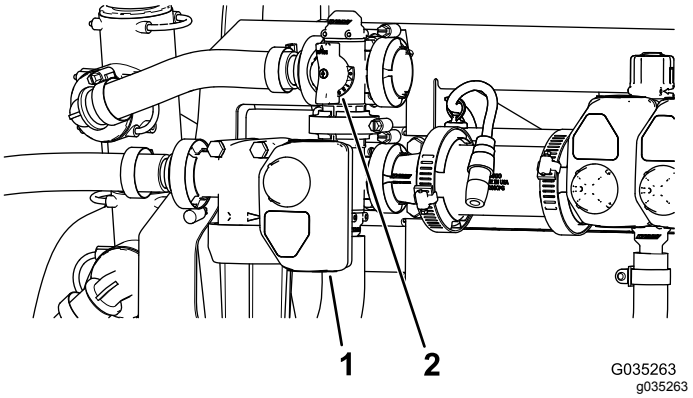


**Figure 11**

1. Actuator (agitation valve)
2. Agitation-bypass-valve handle

### Agitation-Bypass Valve

The agitation-bypass valve redirects the flow of fluid to the sprayer-system pump when you turn off the agitation function (Figure 11). The agitation-bypass valve is located above the agitation valve. You can adjust the bypass valve to ensure that the pressure remains constant when cycling the agitation on and off; refer to Calibrating the Agitation-Bypass Valve (page 44).

### Agitation-Throttle Valve

The agitation-throttle valve is a manually operated ball valve that controls flow to the agitation nozzles in the main tank. This valve allows the user to control the sprayer-system pressure at the agitation nozzles of the main tank when larger application rates are required. The agitation-throttle valve is located above the pump (Figure 12).

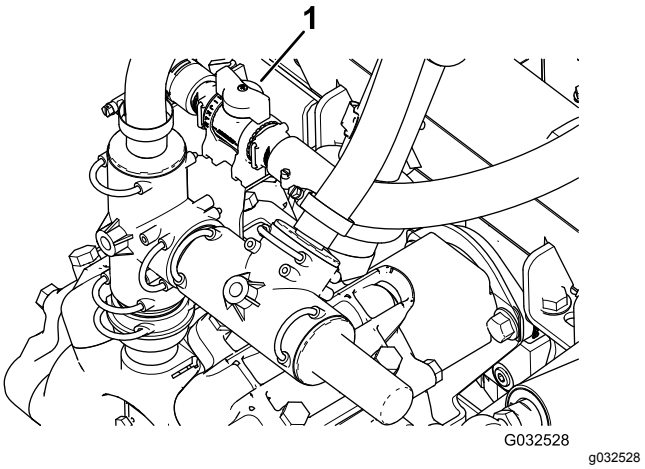


**Figure 12**

1. Agitation-throttle-valve handle

### Boom-Section Valves

The section valves control sprayer flow to the 3 boom sections, and you can turn them on or off with the valves (Figure 13).

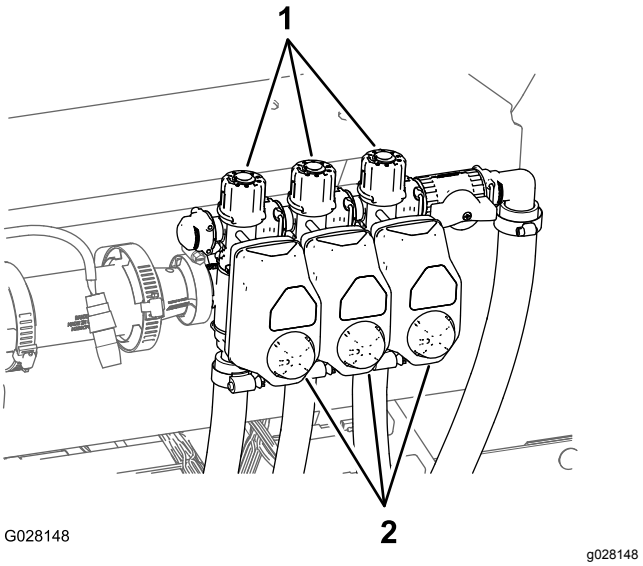


**Figure 13**

1. Knobs (section-bypass valve)
2. Actuators (section valve)

### Boom-Section-Bypass Valve

## Manual Mode Only

The boom bypass redirects the fluid flow for a boom section to the tank when you turn off the boom section. You can adjust the boom bypass to ensure that the boom pressure remains constant no matter how many booms sections are on.

### Anti-Siphon Fill Receptacle

Located toward the front of the tank cover, is a hose receptacle with a threaded fitting, a 90-degree barbed fitting, and a short hose you can direct toward the tank opening. This receptacle allows you to connect a water hose to it and fill the tank with water without contaminating the hose with the chemicals in the tank.

***Important:*** **Do not lengthen the hose to allow contact with the tank fluids. The distance from the end of the hose to the uppermost water level should be within local regulatory limits.**

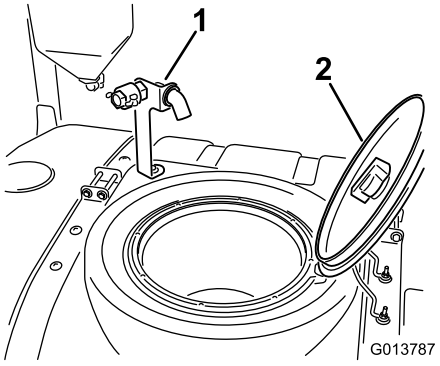


g013787

**Figure 14**

1. Anti-siphon fill receptacle 2. Tank cover

### Tank Cover

The tank cover is located in the center of the top of the tank. To open it, shut off the engine, then turn the front half of the cover to the left and swing it open. You can remove the strainer inside for cleaning. To seal the tank, close the cover and rotate the front half toward the right.

# Specifications

**Note:** Specifications and design are subject to change without notice.

| | |
|---|---|
| Base weight | 1307 kg (2,882 lb) |
| Weight with standard spray system, empty, without operator | 1307 kg (2,882 lb) |
| Weight with standard spray system, full, without operator | 2499 kg (5,510 lb) |
| Maximum gross vehicle weight (GVW) (on level ground) | 3023 kg (6,665 lb) |
| Tank capacity | 1136 L (300 US gallons) |
| Overall width with standard spray system booms stored in the 'X' position | 226 cm (89 inches) |

| | |
|---|---|
| Overall length with standard spray system | 391 cm (154 inches) |
| Overall length with standard spray system to the top of the booms stored in the 'X' position | 442 cm (174 inches) |
| Overall height with standard spray system | 146 cm (57.5 inches) |
| Overall height with standard spray system to the top of the booms stored in the 'X' position | 231 cm (91 inches) |
| Ground clearance | 18.4 cm (7.25 inches) |
| Wheel base | 198 cm (78 inches) |

### Optional Equipment

The Toro Company has optional equipment and accessories that you can purchase separately and install on your sprayer. Contact your Authorized Service Dealer for a complete list of optional equipment that is currently available for your sprayer.

# Operation

**Note:** Determine the left and right sides of the machine from the normal operating position.

# Think Safety First

Please carefully read all the safety instructions and decals in the safety section. Knowing this information could help you or bystanders avoid injury.

# Performing Pre-Starting Checks

Check the following items each time you begin using the sprayer for the day:

- Check the tire pressure.

  **Note:** These tires are different than car tires; they require less pressure to minimize turf compaction and damage.
- Check all fluid levels and add the appropriate amount of specified fluids, if any are found to be low.
- Check the brake pedal operation.
- Check to see that the lights are working.
- With the engine off, check for oil leaks, loose parts, and any other noticeable malfunctions.

If any of the above items are not correct, notify your mechanic or check with your supervisor before taking the sprayer out for the day. Your supervisor may want you to check other items on a daily basis, so ask what your responsibilities are.

# Preparing to Drive the Machine

## Checking the Engine-Oil Level

Before you start the engine and use the machine, check the oil level in the engine crankcase; refer to Checking the Engine Oil (page 56).

## Checking the Cooling System

Before you start the engine and use the machine, check the cooling system; refer to Checking the Coolant Level (page 66).

## Checking the Hydraulic System

Before you start the engine and use the machine, check the hydraulic system; refer to Checking the Hydraulic Fluid (page 69).

## Checking the Tire Pressure

**Service Interval:** Before each use or daily

Check the tire air pressure to ensure proper levels. Fill the tires to 138 kPa (20 psi).

**Note:** Also, check the tires for wear or damage.

## Checking the Brakes

**Service Interval:** Before each use or daily

Before starting the sprayer, lightly press the brake pedal. If the pedal travels more than 2.5 cm (1 inch) before you feel resistance, adjust the brakes; refer to Checking the Brakes (page 24).

**⚠ WARNING**

**If you operate the sprayer with poorly adjusted or worn brakes, you could lose control of the sprayer, resulting in serious injury or death to you or bystanders.**

**Always check the brakes before operating the sprayer and keep them properly adjusted and repaired.**

## Adding Fuel

**⚠ DANGER**

**In certain conditions, fuel is extremely flammable and highly explosive. A fire or explosion from fuel can burn you and others and can damage property.**

- **Fill the fuel tank outdoors, in an open area, when the engine is cold. Wipe up any fuel that spills.**
- **Do not fill the fuel tank completely full. Add fuel to the fuel tank until the level is 25 mm (1 inch) below the bottom of the filler neck. This empty space in the tank allows fuel to expand.**
- **Never smoke when handling fuel, and stay away from an open flame or where fuel fumes may be ignited by a spark.**
- **Store fuel in an approved container and keep it out of the reach of children. Never buy more than a 30-day supply of fuel.**

**⚠ DANGER**

**In certain conditions during fueling, static electricity can be released causing a spark which can ignite the fuel vapors. A fire or explosion from fuel can burn you and others and can damage property.**

- **Always place fuel containers on the ground away from your vehicle before filling.**
- **Do not fill fuel containers inside a vehicle or on a truck or trailer bed because interior carpets or plastic truck bed liners may insulate the container and slow the loss of any static charge.**
- **When practical, remove equipment from the truck or trailer and refuel the equipment with its wheels on the ground.**
- **If this is not possible, then refuel such equipment on a truck or trailer from a portable container rather than from a fuel-dispenser nozzle.**
- **If you must use a fuel-dispenser nozzle, keep the nozzle in contact with the rim of the fuel tank or container opening at all times until fueling is complete.**

***Important:*** **Your engine runs on No. 2-D or 1-D automotive-type diesel fuel with a minimum cetane rating of 40.**

**Note:** Your engine may require a higher cetane-rated fuel if you operate the machine at high altitudes or in low atmospheric temperatures.

### Using Biodiesel Fuel

This machine can also use a biodiesel blended fuel of up to B20 (20% biodiesel, 80% petrodiesel). The petrodiesel portion should be low or ultra low sulfur. Observe the following precautions:

- The biodiesel portion of the fuel must meet specification ASTM D6751 or EN14214.
- The blended fuel composition should meet ASTM D975 or EN590.
- Painted surfaces may be damaged by biodiesel blends.
- Use B5 (biodiesel content of 5%) or lesser blends in cold weather.
- Monitor seals, hoses, gaskets in contact with fuel as they may degrade over time.
- Fuel filter plugging may be expected for a time after converting to biodiesel blends.
- Contact your distributor if you wish for more information on biodiesel fuel.

## Filling the Fuel Tank

**Fuel tank capacity:** approximately 45 L (12 US gallons).

1. Position the sprayer on a level surface, set the parking brake, stop the pump, shut off the engine, remove the key, and allow the engine to cool.
2. Clean the area around the fuel-tank cap (Figure 15).

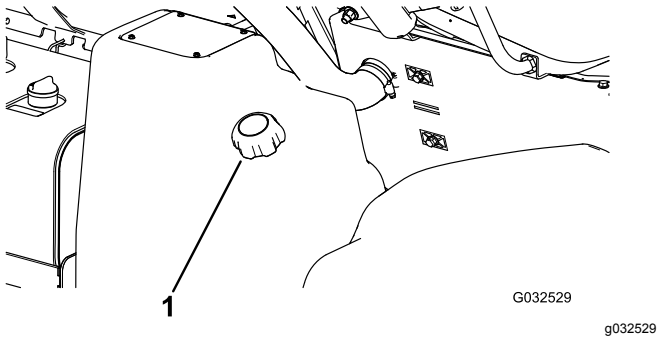


**Figure 15**

1. Fuel-tank cap

3. Remove the fuel-tank cap.
4. Fill the tank to about 2.5 cm (1 inch) below the top of the tank, (bottom of the filler neck).

   **Note:** This space in the tank allows fuel to expand. **Do not overfill.**
5. Install the fuel-tank cap securely.
6. Wipe up any fuel that may have spilled.

# Preparing to Use the Sprayer

## Cleaning the Suction Strainer

**Service Interval:** Before each use or daily—Clean the suction strainer (more often when using wettable powders).

**Note:** Optional suction element filters are available through your authorized Toro parts distributor.

1. Position the sprayer on a level surface, set the parking brake, stop the pump, shut off the engine, and remove the key from the starter switch.
2. At the top of the sprayer tank, remove the retainer that secures the hose fitting attached to the large hose and the strainer housing (Figure 16).

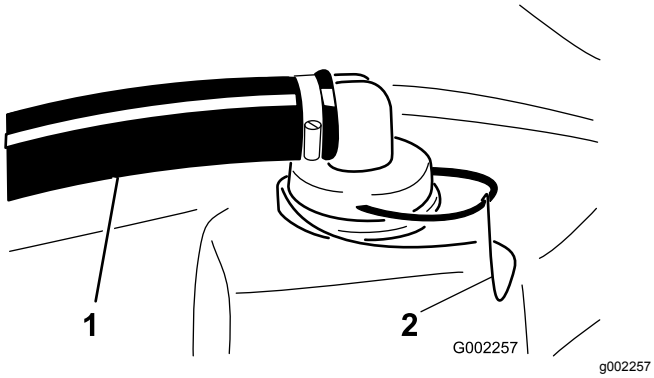


**Figure 16**

1. Suction hose
2. Retainer

3. Remove the hose and hose fitting from the strainer housing (Figure 16).
4. Pull the suction strainer out of the strainer housing in the tank (Figure 17).

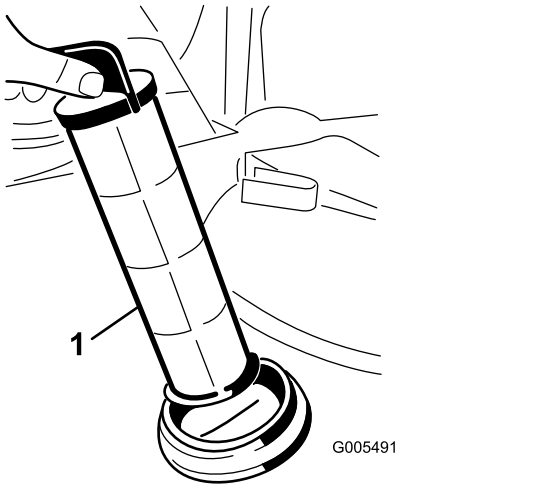


**Figure 17**

1. Suction strainer

5. Clean the suction strainer with clean water.
6. Insert the suction strainer into the strainer housing until the strainer is fully seated.
7. Align the hose and hose fitting to the strainer housing at the top of the tank to the and secure fitting and housing with the retainer that you removed in step 2.

# Inspecting the Tank Straps

**Service Interval:** Before each use or daily—Check the tank straps.

***Important:*** **Over tightening the tank strap fasteners can result in deforming and damaging the tank and straps.**

1. Fill the main tank with water.
2. Check to see if there is any movement between the tank straps and the tank (Figure 18).

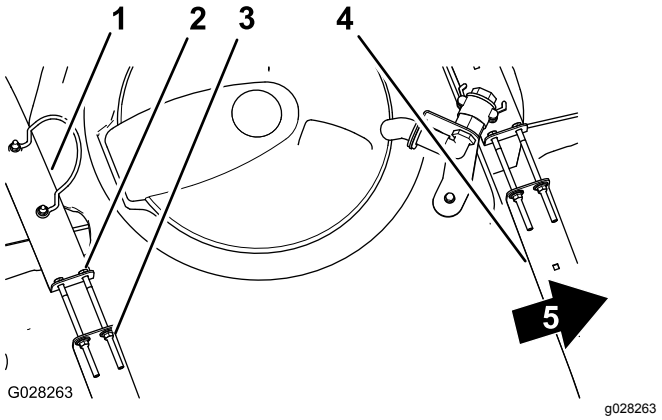


**Figure 18**

1. Rear tank strap
2. Bolt
3. Flanged locknut
4. Forward tank strap
5. Front of the machine

3. If the tank straps fit loose to the tank, tighten the flanged locknuts and bolts at the top of straps until the straps are flush with the surface of the tank (Figure 18).

   **Note: Do not over tighten the tank strap hardware.**

# Operating the Machine

## Using the Parking Brake

### Using the Parking Brake

1. Press down the service brake pedal (Figure 19).

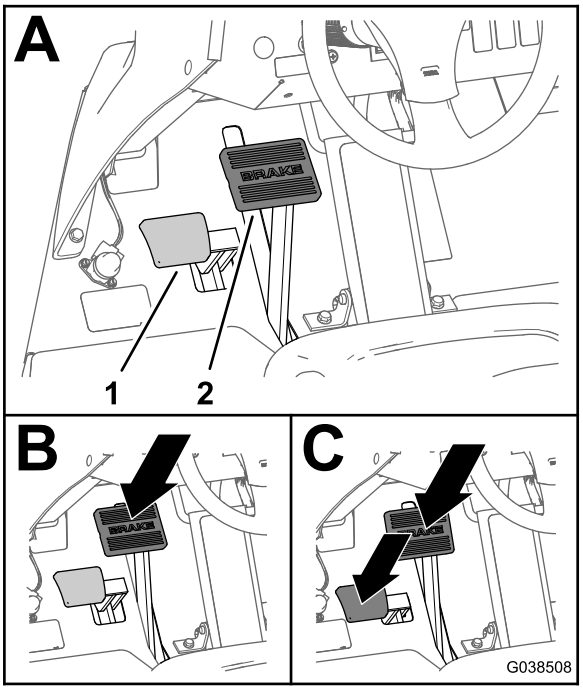


g038508

**Figure 19**

1. Parking-brake pedal
2. Service-brake pedal

2. While pressing down the service-brake pedal, press down the parking-brake pedal (Figure 19).
3. Remove you foot from the service-brake pedal, then remove you foot from the parking brake pedal.

   **Note:** The parking-brake pedal remains in the down position when the parking brake engages.

### Disengaging the Parking Brake

Press down the service-brake pedal until the service brake disengages (Figure 20).

**Note:** The parking-brake pedal will return to the up position when the parking brake disengages.

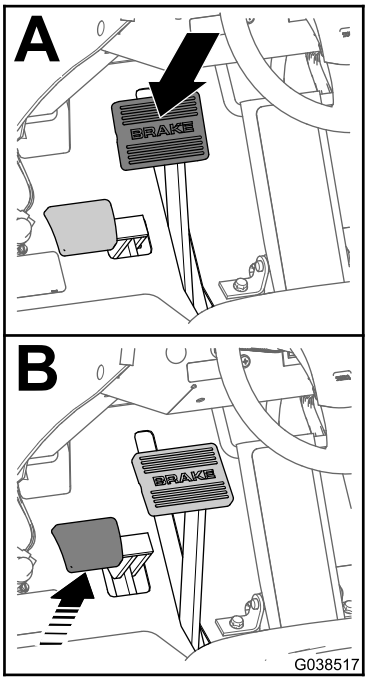


g038517

**Figure 20**

## Starting the Engine

1. Sit on the operator's seat and keep your foot off the traction pedal.
2. Make sure that the pump, agitation, and boom switches are in the OFF position.
3. Ensure that the parking brake is engaged, the traction pedal is in the NEUTRAL position, the throttle is in the SLOW position.
4. Turn the switch to the ON/PREHEAT position.

   **Note:** An automatic timer controls the preheat for approximately 6 seconds.
5. After preheating, turn the key to the START position.
6. Crank the engine for no longer than 15 seconds.
7. Release the key when the engine starts.
8. If the engine requires additional preheating, turn the key to the OFF position, then to the ON/PREHEAT position.
9. Run the engine at idle speed or partial throttle until the engine warms up.

## Driving the Machine

1. Release the parking brake and press the traction pedal forward to drive the machine forward or press the pedal rearward to drive the machine in reverse.

   ***Important:*** **Ensure that you allow the sprayer to come to a stop before switching between the FORWARD and REVERSE positions.**

2. To slowly stop the machine, release the traction pedal.

   **Note:** The traction pedal returns to the NEUTRAL position.

3. To stop the machine quickly, press the brake pedal.

   **Note:** The stopping distance of your machine may vary depending on the sprayer-tank load and ground speed of the machine.

## Setting the Ground-Speed-Lock Switch

**⚠ CAUTION**

**If you press the ground-speed-lock switch and do not have your foot on the traction pedal, the traction unit may suddenly stop and cause you to lose control, possibly injuring you or bystanders.**

**Ensure that you have your foot on the traction pedal when you disengage the ground-speed-lock switch.**

1. Drive forward and attain the desired ground speed; refer to Driving the Machine (page 28).
2. Press the top of the ground-speed-lock switch.

   **Note:** The light on the switch illuminates.

3. Take your foot off the traction pedal.

   **Note:** The sprayer maintains the speed that you set.

4. To release the ground-speed-lock switch, either place your foot on the traction pedal and press the bottom of the switch or remove your foot from the traction pedal and press the brake pedal.

   **Note:** The light on the switch turns off and the traction control returns to the traction pedal.

## Shutting Off the Engine

1. Move all controls to the NEUTRAL position.
2. Press the brake to stop the sprayer.
3. Set the parking brake.
4. Move the throttle lever to the IDLE/SLOW position.
5. Turn the starter key to the OFF position.
6. Remove the key from the starter switch to prevent someone from accidentally starting the engine.

# Breaking in a New Sprayer

To provide proper performance and long sprayer life, follow these guidelines for the first 100 operating hours:

- Check the fluid and engine-oil levels regularly and be alert for indications of overheating in any component of the sprayer.
- After filling the tank, check the tank straps for any play. Tighten as necessary.
- After starting a cold engine, let it warm up for about 15 seconds before accelerating.
- Avoid hard braking situations for the first several hours of new sprayer break-in operation. New brake linings may not be at optimum performance until several hours of use has caused the brakes to become burnished (broken-in).
- Avoid racing the engine.
- Refer to Maintenance (page 47) for any special low-hour checks.

# Operating the Sprayer

To operate the Multi Pro® Sprayer, first fill the spray tank, apply the solution to the work area, and finally clean the tank and spray system. It is important that you complete all 3 of these steps in succession to avoid damaging the sprayer. For example, do not mix and add chemicals in the spray tank at night and then spray in the morning. This would lead to separation of the chemicals and possible damage to the sprayer components.

**⚠ CAUTION**

**Chemicals are hazardous and can cause personal injury.**

- **Read the directions on the chemical labels before handling the chemicals and follow all manufacturer recommendations and precautions.**
- **Keep chemicals away from your skin. Should contact occur, wash the affected area thoroughly with soap and clean water.**
- **Wear goggles and any other protective equipment recommended by the chemical manufacturer.**

The Multi Pro® Sprayer has been specifically designed to have high durability in order to give it the long sprayer life you need. Different materials have been chosen for specific reasons at different locations on your sprayer to meet this goal. Unfortunately, there is no single material that is perfect for all foreseeable applications.

Some chemicals are more aggressive than others and each chemical interacts differently with various materials. Some consistencies (e.g., wettable powders, charcoal) are more abrasive and lead to higher wear rates. If a chemical is available in a formulation that would increase the life of the sprayer, use this alternative formulation.

Always remember to clean your sprayer and spray system thoroughly after all applications. This will ensure that your sprayer has a long and trouble-free life.

**Note:** If you have questions or need additional information regarding the spray control system, refer to the *Operator's Manual* supplied with the system.

# Filling the Fresh-Water Tank

Always fill the fresh-water tank with clean water before handling or mixing any chemicals.

The fresh-water tank is located on the ROPS, behind the passenger seat (Figure 21). It supplies a source of fresh water for you to wash chemicals off your skin, eyes, or other surfaces in the case of accidental exposure.

To fill the tank, unscrew the cap on the top of the tank, fill the tank with fresh water, and replace the cap.

To open the fresh-water tank spigot, turn the lever on the spigot.

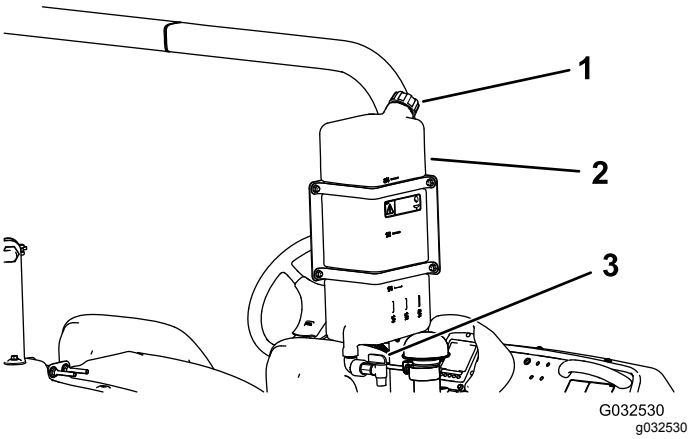


**Figure 21**

1. Filler cap
2. Fresh-water tank
3. Spigot

# Filling the Spray Tank

***Important:*** **Ensure that the chemicals you will use are compatible for use with Viton™ (see the manufacturer's label; it should indicate if it is not compatible). Using a chemical that is not compatible with Viton will degrade the O-rings in the sprayer, causing leaks.**

***Important:*** **The tank volume markings are for reference only and cannot be considered accurate for calibration.**

***Important:*** **After filling the tank for the first time, check the tank straps for any play. Tighten as necessary.**

1. Stop the sprayer on a level surface, shut off the engine, and set the parking brake.
2. Determine the amount of water needed to mix the amount of chemical you need as prescribed by the chemical manufacturer.
3. Open the tank cover on the spray tank.

   **Note:** The tank cover is located in the center of the top of the tank. To open it, turn the front half of the cover counterclockwise and swing it open. You can remove the strainer inside for cleaning. To seal the tank, close the cover and rotate the front half clockwise.
4. Add 3/4 of the required water to the spray tank using the anti-siphon fill receptacle.

   ***Important:*** **Always use fresh, clean water in the spray tank. Do not pour concentrate into an empty tank.**

5. Start the engine, set the parking brake, set the pump switch to the ON position, and move the throttle lever to HIGH IDLE.
6. Set the agitation switch to the ON position.

   ***Important:*** **Prior to introducing wettable powders into any Toro Spray System, mix the powders in a suitable container with sufficient fresh water to create a free flowing slurry. Failure to do so may result in chemical deposits on the bottom of the tank, degraded agitation, clogging of filters, and improper agitation rates.**

   **Toro recommends using the approved Eductor Kit for this machine. Contact your Authorized Toro Dealer for more information.**
7. Add the proper amount of chemical concentrate to the tank, as directed by the chemical manufacturer.
8. Add the remaining water to the tank.

# Operating the Booms

The boom-lift switches on the sprayer control panel allows you to move the booms between the TRANSPORT and SPRAY positions without leaving the operator's seat. It is recommended to change the boom positions while the machine is not moving.

1. Stop the sprayer on level ground.
2. Use the boom-lift switches to lower the booms.

   **Note:** Wait until the booms reach the full, extended spray position.
3. When you need to retract the booms, stop the sprayer on level ground.
4. Use the boom-lift switches to raise the booms.

   **Note:** Raise the booms until they are completely in the boom-transport cradle forming the 'X' transport position and the boom cylinders are fully retracted.

***Important:*** **To prevent damage to the boom-actuator cylinder, make sure that the actuators are fully retracted before transport.**

***Important:*** **Release the actuator switch once the booms have reached the desired position. Running the actuators against the stops may damage the cylinders and/or other hydraulic components.**

## Operating the Boom-Transport Cradle

The sprayer comes with a boom-transport cradle that has a unique safety feature. In the event of accidental boom contact with a low overhead object while in the TRANSPORT position, you can push the boom(s) out of the transport cradles. If this occurs, the booms will come to rest in a near horizontal position to the rear of the vehicle. From this position, move the booms to the transport cradle immediately.

***Important:*** **Transporting the booms in any position other than the 'X' transport position using the boom-transport cradle can damage the booms.**

To put the booms back into the transport cradle, lower the boom(s) to the SPRAY position, and then raise the boom(s) back into the TRANSPORT position. Ensure that the boom cylinders are fully retracted to prevent actuator-rod damage during storage.

# Using the InfoCenter LCD Display

The InfoCenter LCD display shows information about your machine, such as the operating status, various diagnostics, and other information about the machine. The InfoCenter displays information on the splash screen (Figure 22), home screen, main menu screen, and related sub-menu screens.




G035344
g035344

**Figure 22**
Splash Screen

## Home Screen

When you start the machine, the home screen appears, displaying the corresponding icons that apply (i.e., the parking brake is engaged, the boom sections are in the ON position, the operator is out of the seat, etc.).

**Note:** The following figure is an example screen; this screen is meant to show all the **potential** icons that could appear on the screen while operating.

Refer to the following graphic for all the icon meanings (Figure 23).

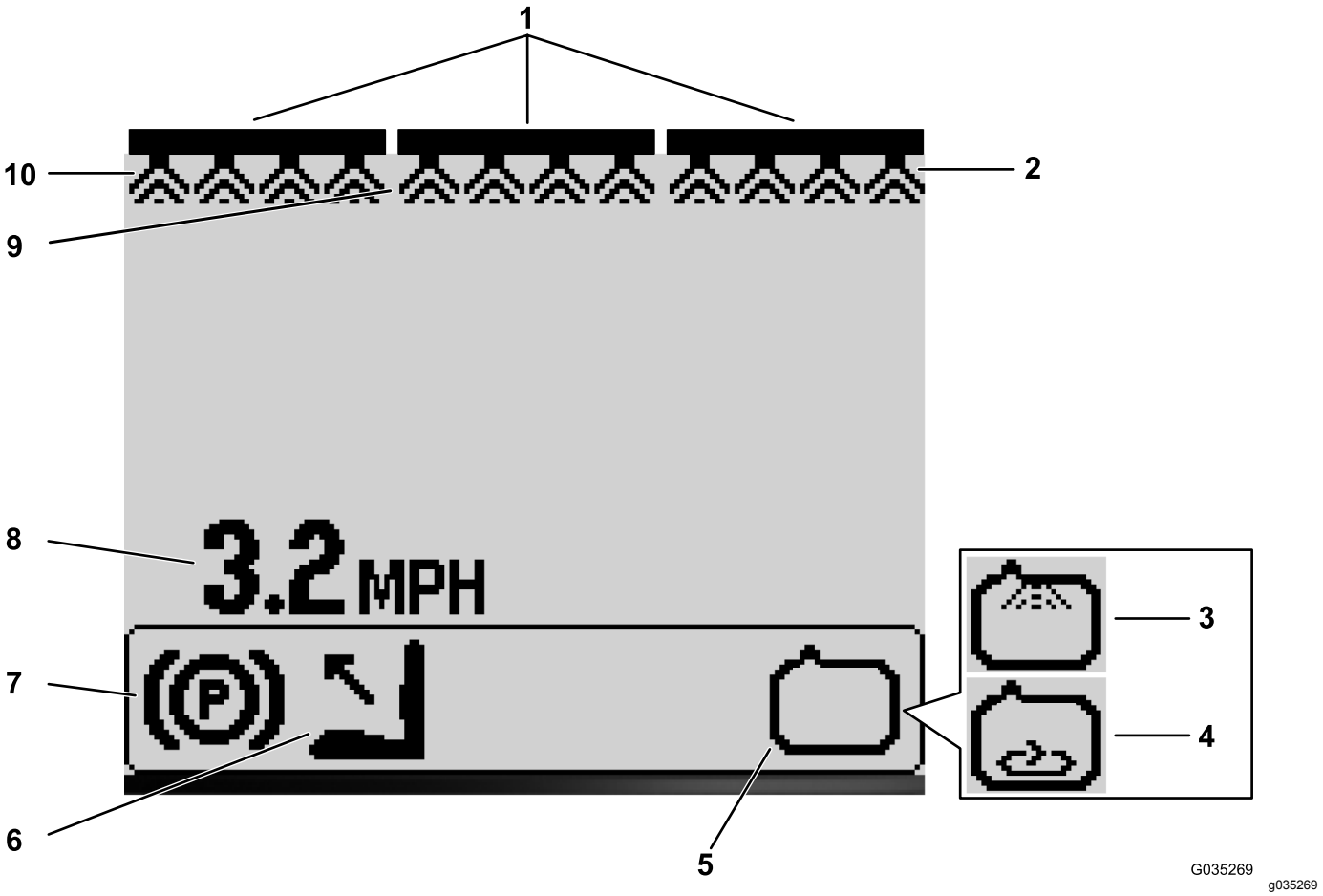


**Figure 23**

1. Master-boom-switch indicator—ON
2. Right boom-section indicator—ON
3. Rinse-system indicator—ON (optional kit)
4. Agitation indicator—ON
5. Spray-pump indicator—ON
6. Operator out of seat
7. Parking-brake indicator
8. Vehicle-speed indicator (mph)
9. Center boom-section indicator—ON
10. Left boom-section indicator—on

## Master-Boom-Switch Indicator

The master-boom-switch indicator displays when the master boom is in the ON position (Figure 23).

## Boom-Sections Indicator

The left, right, and/or center boom sections display when any of the boom sections are in the ON position (Figure 23).

## Vehicle-Speed Indicator

The vehicle-speed indicator displays the current vehicle speed (Figure 23).

## Parking-Brake Indicator

The parking-brake indicator displays when the parking brake is engaged (Figure 23).

## Operator's-Seat Indicator

The operator-seat indicator displays when the operator is out of the seat (Figure 23).

## Spray-Pump Indicator

The spray-pump indicator displays when the spray pump is ON (Figure 23).

## Rinse-System Indicator

### Optional Kit

The rinse-system indicator displays when the rinse system is active (Figure 23).

## Agitation Indicator

The agitation indicator displays when agitation is ON (Figure 23).

# Main Menu Screen

Press and hold the button 5 (far right) on the InfoCenter to access the Main Menu screen.

From the Main Menu screen, you can access the following sub-menues: (Figure 24).

- Settings
- Calibration
- Service
- Diagnostics
- About

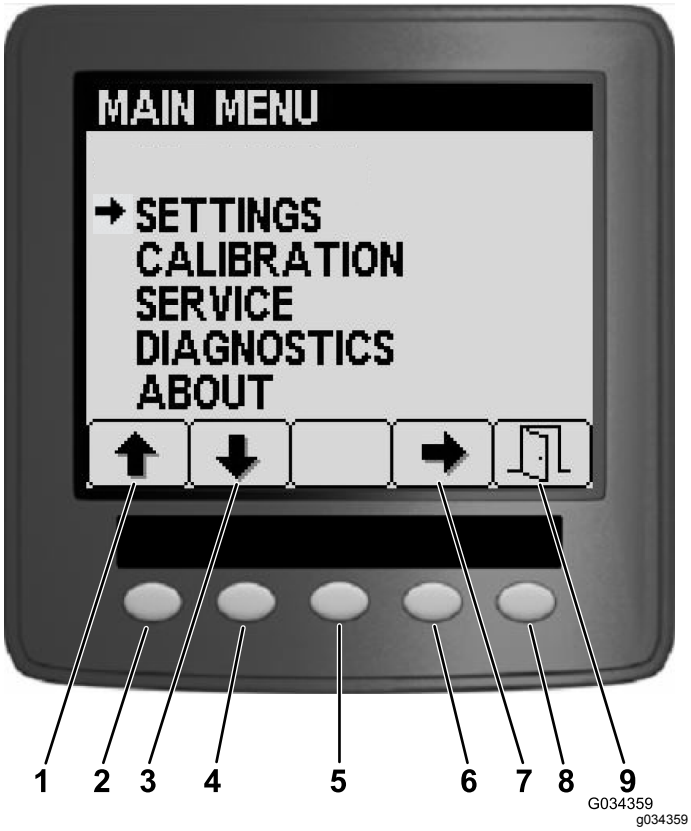


**Figure 24**

1. Up arrow icon
2. Button 1 (navigate up)
3. Down arrow icon
4. Button 2 (navigate down)
5. Button 3 (context-sensitive selector)
6. Button 4 (select setting)
7. Select arrow icon
8. Button 5 (context sensitive—exit/save or enter)
9. Exit/save icon

# Settings Menu

To access the Settings screen, press either button 1 or button 2 on the Main Menu screen (Figure 24) to navigate Settings option, and press button 4 to select the Settings option (Figure 24).

**Note:** This screen allows you to view and change the settings for the tank, display, boom width, and to reset default settings.

## Setting the Tank Agitation Flow

1. At the Settings screen, press button 2 to navigate to the Tank option, and press button 4 Tank (Figure 25).

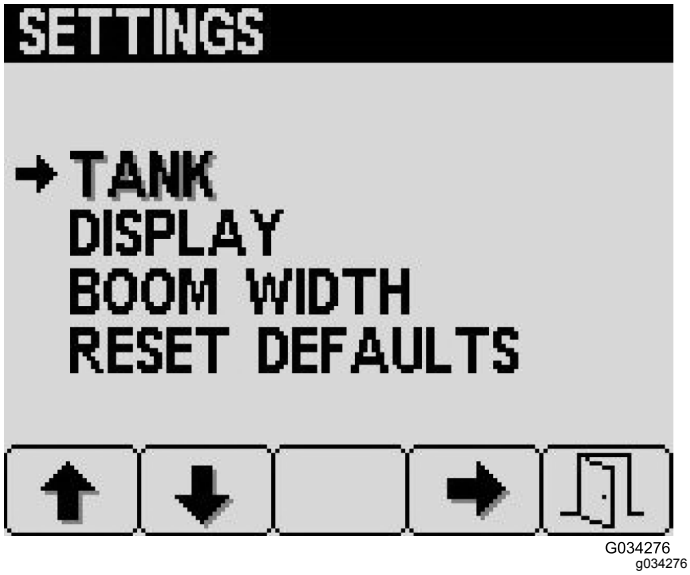


**Figure 25**

2. At the Tank screen, press button 2 to navigate to the Agitation option (Figure 26).

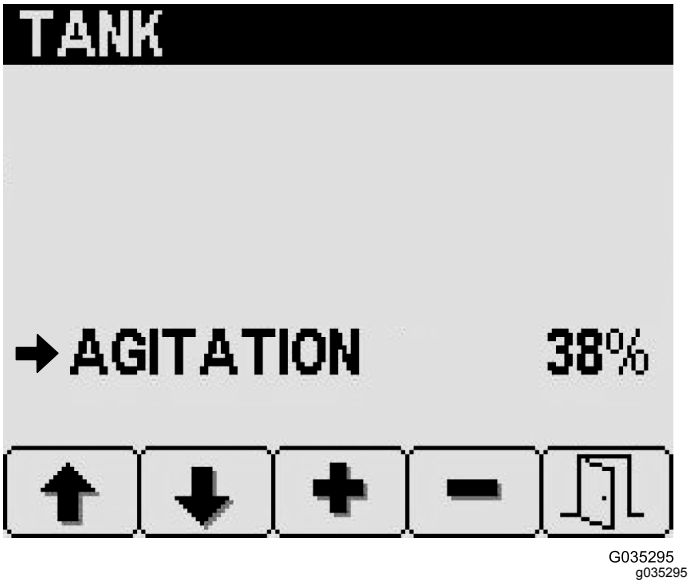


**Figure 26**

3. Press button 3 (raise) or button 4 (lower) to adjust the percent of sprayer-pump flow used for tank agitation (Figure 26).
4. Press button 5 to save your setting, exit the Tank screen, and return to the Main screen.

### Adjusting the Units of Measure

1. At the Settings screen, press button 2 to navigate to the Display option, and then press button 4 to select the Display.
2. At the Display menu screen, press buttons 1 or 2 navigate to the Units option and then press button 4 to select Units (Figure 27).

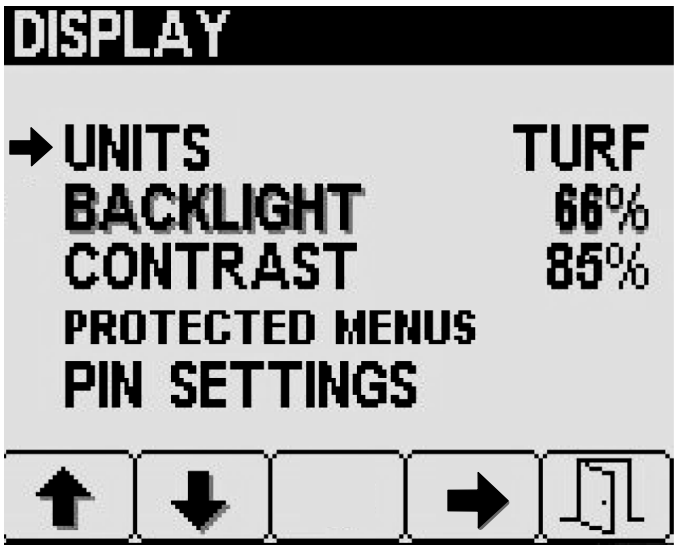


**Figure 27**

3. Press buttons 1 or 2 to navigate to the desired unit of measure and then press button 4 to select a unit of measure.
   - **English:** mph, gallons, acre
   - **Turf:** mph, gallons, 1000 ft²
   - **SI (metric):** kph, liter, hectare
4. Press button 5 to save your setting, exit the Units screen, and return to the Main screen.

### Adjusting the Display Backlighting and Contrast

1. At the Settings screen, press button 2 to navigate to the Display option, and then press button 4 to select the Display.
2. At the Display menu screen, press button 2 to navigate to the Backlight option or the Contrast option (Figure 28).

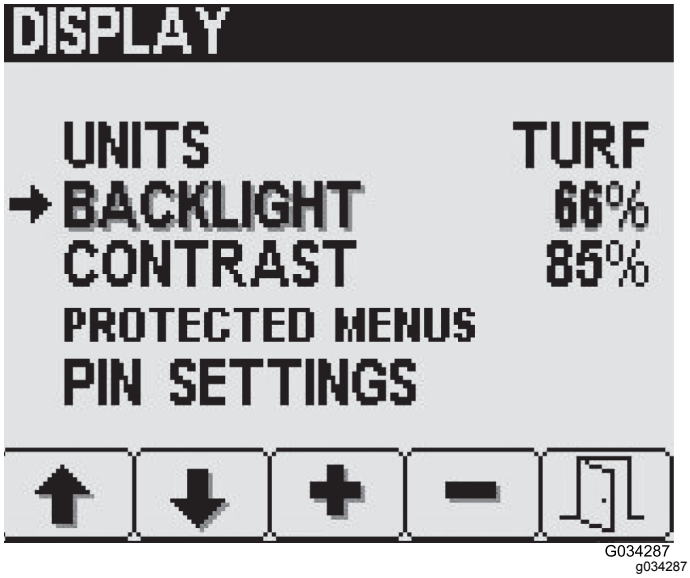


**Figure 28**

3. Press button 3 (raise) or button 4 (lower) to adjust the amount of backlighting or amount of contrast for the LED display (Figure 28).
4. Press button 5 to save your setting, exit the Backlight screen or Contrast screen, and return to the Main screen.

### Setting the Security for Protected Menu Options

**Note:** The protected menus allows you to selected menu options to be secure with the PIN.

1. Press button 2 on the Display settings to navigate to the Protected Menus option, then press button 4 to select Protected Menus (Figure 29).

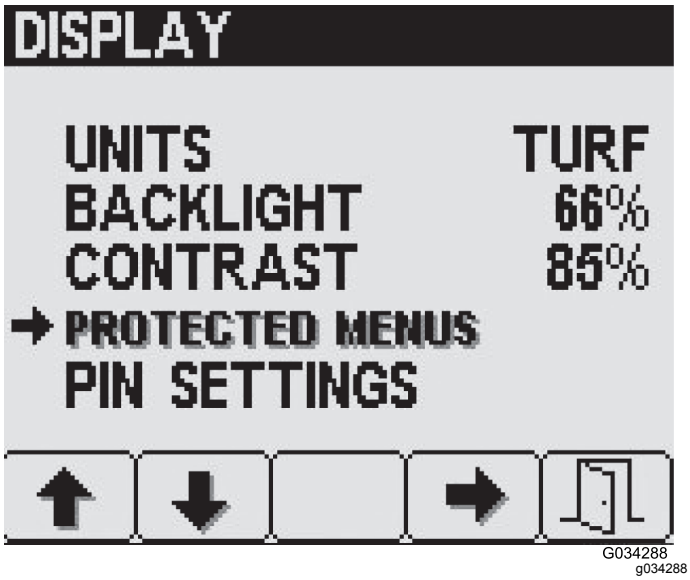


**Figure 29**

2. Press button 2 to navigate to the desired protected menu item (Figure 29).
3. Press button 4 to select or deselect individual protected menu items as shown in Figure 30.

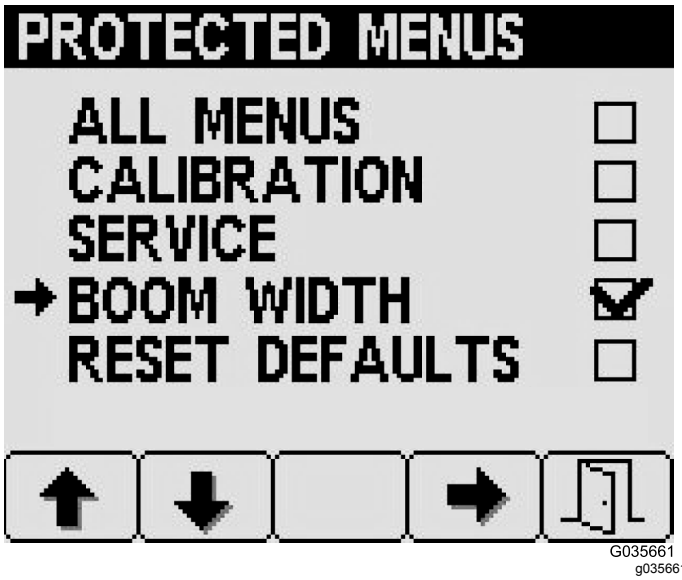


**Figure 30**

4. Press button 5 to save your setting, exit the Protected Menus screen, and return to the Main screen.

### Turning the PIN Security On or Off

**Note:** Turning PIN security ON of OFF affects the protected menu options that are secured with the PIN.

1. At the Display menu screen, press button 2 to navigate to the PIN Settings option, then press button 4 to select PIN Settings (Figure 31).

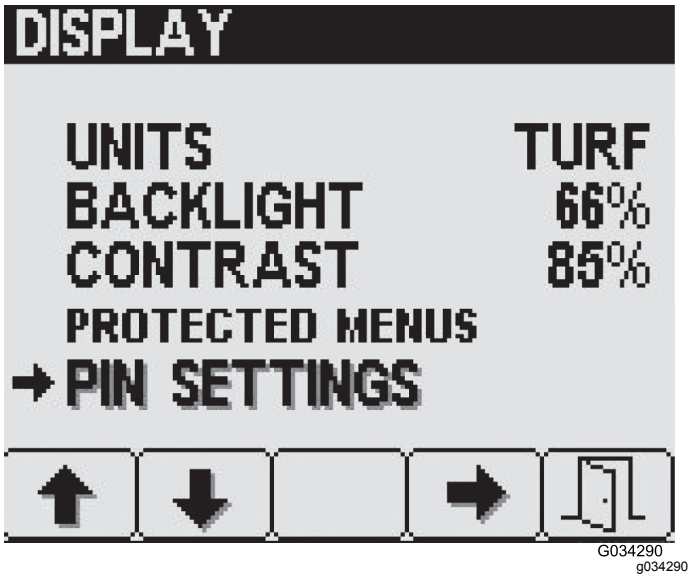


**Figure 31**

2. Enter your 4 digit PIN using buttons 1 to 4, and press button 5 to enter the PIN into the InfoCenter (Figure 32).

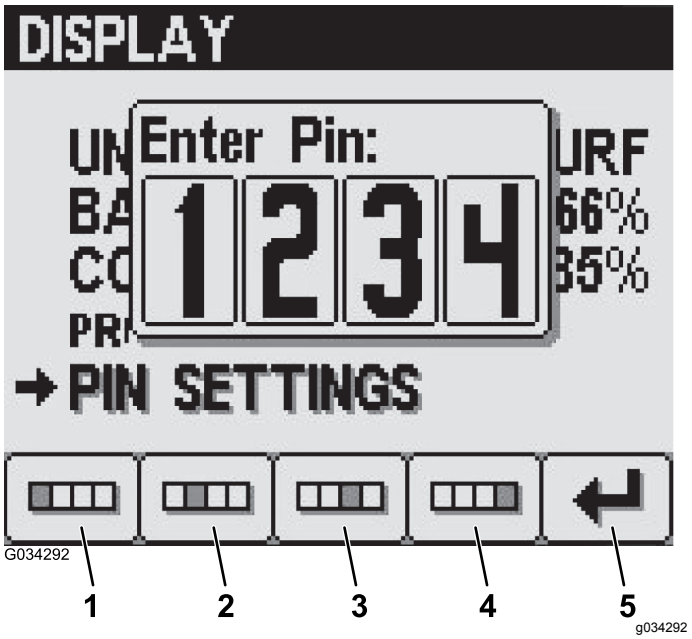


**Figure 32**

1. Digit 1
2. Digit 2
3. Digit 3
4. Digit 4
5. Enter

3. From the PIN Settings screen, press button 4 to select PIN Entry and to turn the PIN option ON or OFF (Figure 33).

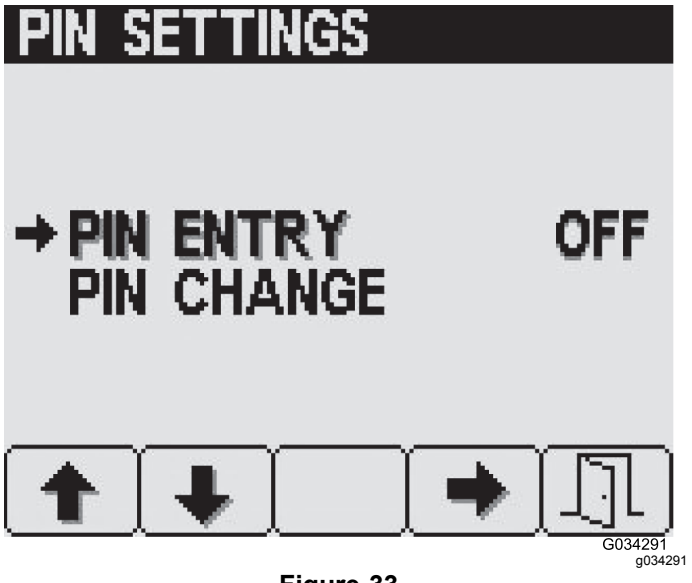


**Figure 33**

4. Press button 5 to save your setting, exit the PIN Setting screen, and return to the Main screen.

## Changing the PIN

1. At the PIN Settings screen, press button 2 to navigate to the PIN Change option, then press button 4 to select PIN Change (Figure 31).
2. Enter your 4 digit PIN using buttons 1 to 4, and press button 5 to enter the PIN into the InfoCenter (Figure 32).
3. From the PIN Settings screen, press button 2 to navigate to the PIN Change option, then press button 4 to select PIN Change (Figure 34).

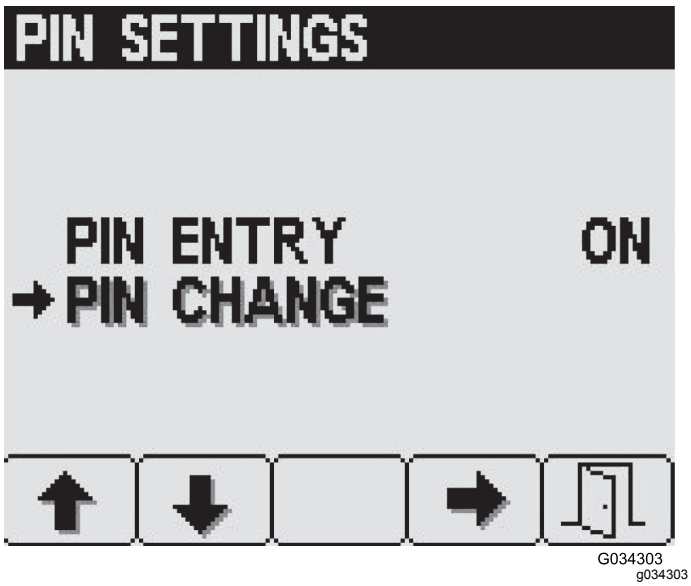


**Figure 34**

4. I the Enter Old PIN screen, enter your old PIN using buttons 1 to 4, and press button 5 to enter the PIN into the InfoCenter (Figure 32).

   **Note:** The **default PIN** when you initially create your PIN is **1234**.

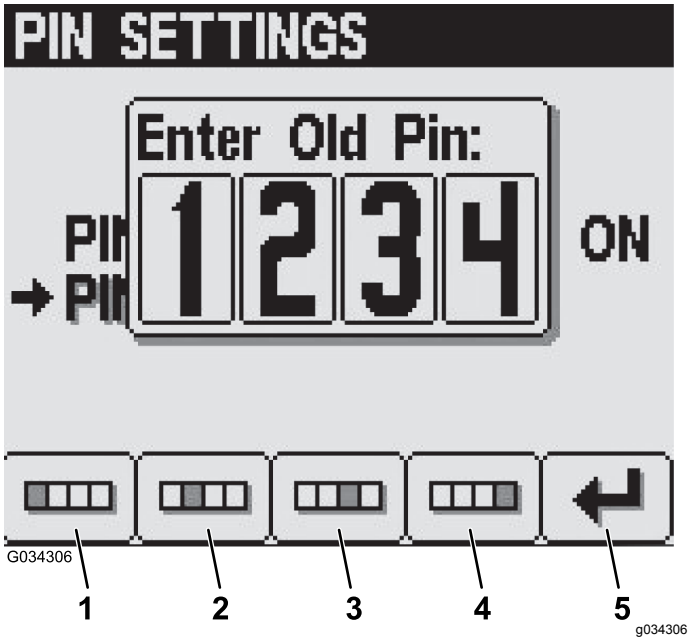


**Figure 35**

1. Digit 1
2. Digit 2
3. Digit 3
4. Digit 4
5. Enter PIN

5. In the Enter New PIN screen, enter your new PIN using buttons 1 to 4, and press button 5 to enter the new PIN into the InfoCenter (Figure 36).

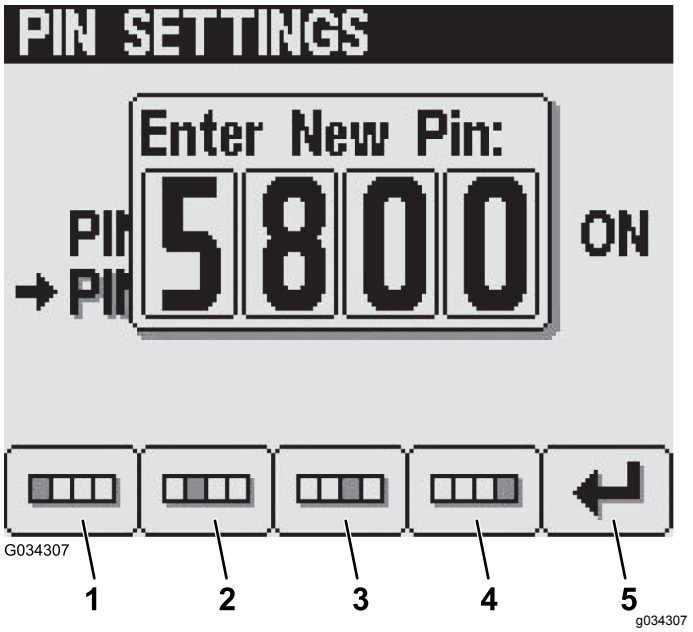


**Figure 36**

1. Digit 1
2. Digit 2
3. Digit 3
4. Digit 4
5. Enter PIN

6. In the Confirm screen, enter your new PIN using buttons 1 to 4, and press button 5 to enter the PIN into the InfoCenter (Figure 37).

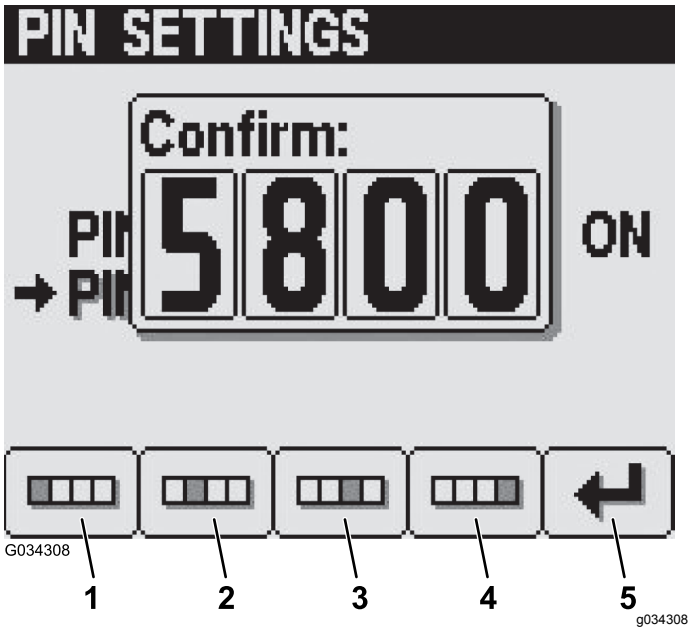


**Figure 37**

1. Digit 1
2. Digit 2
3. Digit 3
4. Digit 4
5. Enter PIN

**Note:** A **Pin Correct** message appears for approximately 5 seconds to confirm you have entered the correct the PIN number.

### Boom-Width Settings

The boom-width settings are pre-populated dimensions set at the factory (Figure 38).

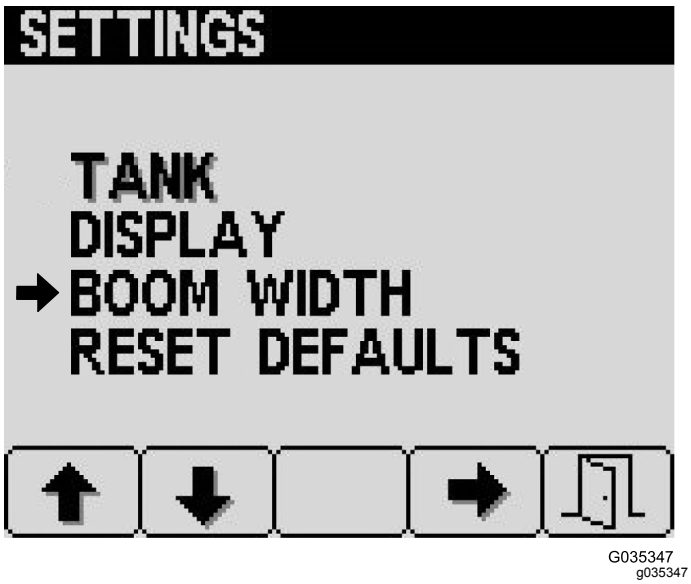


**Figure 38**

## Calibration Screen

To access the Calibration screen, press button 2 on the Main Menu screen (Figure 24) until you reach Calibration, and press button 4 to select Calibration.

***Important:*** **Pressing button 5 at any time cancels calibrations. If you do so, the machine automatically uses the current calibration rates.**




**Figure 39**

### Preparing for the Speed Calibration

1. Ensure that the tires are properly inflated; refer to Checking the Tire Pressure (page 24).
2. To access the Speed screen, press button 2 on the Calibrate screen until you reach Speed, then press button 4 (Figure 39) to select Speed.
3. Set the parking brake and fill the sprayer tank with a minimum of 700 L (150 US gallons).
4. Press button 2 to move to the next step and to view the Speed Calibration screen.
5. Mark off the desired distance before proceeding to the next screen.
6. Press button 2 to move to the next step.
7. Press button 3 to increase the desired distance or press button 4 to decrease the desired distance (Figure 40).

   **Note:** If you choose to cancel the calibration by pressing button 5, the system automatically defaults to the previously-stored distance.

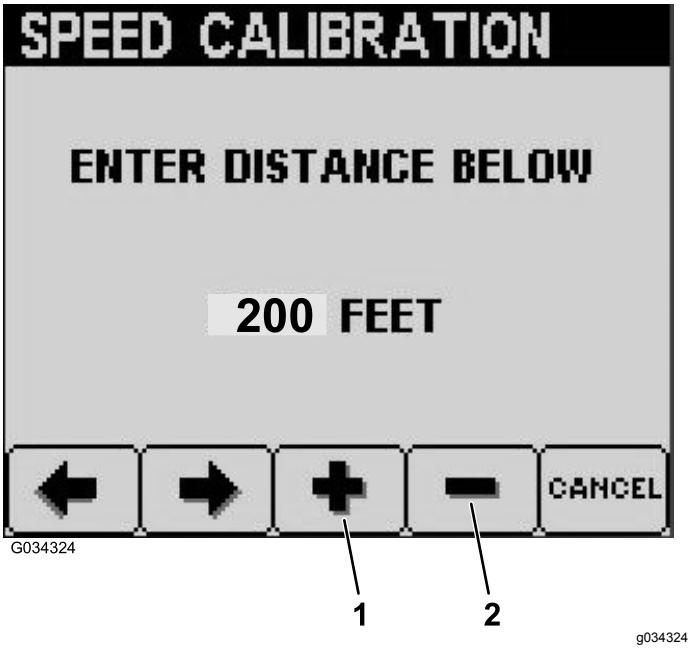


**Figure 40**

1. Increase the desired distance.
2. Decrease the desired distance.

### Performing the Speed and Distance Test

1. Ensure that the boom sections are off and press button 2 to begin calibration.

   **Note:** As you drive the machine, and the speed calibration progresses, the InfoCenter displays distance until it reaches the set amount.

   ***Important:*** **Do not shut off the machine after the speed calibration completes.**
2. Start the engine and release the parking brake.
3. Beginning with the center of the front tire at the “0” mark, drive the vehicle at approximately 5 to 8 kph (3 to 5 mph) to the other mark, and stop with the center of the front tire on the mark.
4. Press button 2 to confirm the distance traveled.
5. If the calibration is successful, a Calibration Successful screen appears; press button 5 to exit.
6. If the calibration is not successful, a Calibration Failed screen appears with the reasoning behind why the calibration failed; press button 5 to exit and restart the calibration.
7. Set the parking brake, shut off the engine, and remove the key from the key switch.

### Manual Calibration Entry

This screen allows you to view and edit the speed calibration number.

## Service Screen

To access the Service screen, press button 2 on the Main Menu screen (Figure 24) until you reach Service, and press button 4 to select Service.

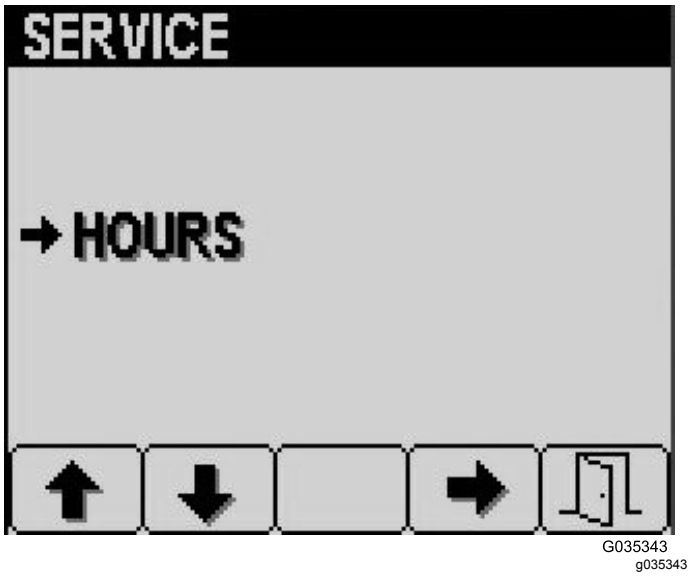


**Figure 41**

From the Service screen, select the Hours screen to view the overall hours of machine, the pump operation hours, and when the next service is due (Figure 42).




**Figure 42**

To reset the Hours screen, press and hold button 3 (Figure 42).

## Diagnostics Screen

To access the Diagnostics screen, press button 2 on the Main Menu screen (Figure 24) until you reach Diagnostics, and press button 4 to select Diagnostics.

Select Input/Output on the Diagnostics screen to view your pumps, booms, and engine input and output (Figure 43).

Select Fault Viewer on the Diagnostics screen to view all faults that have occurred on the machine (Figure 43).

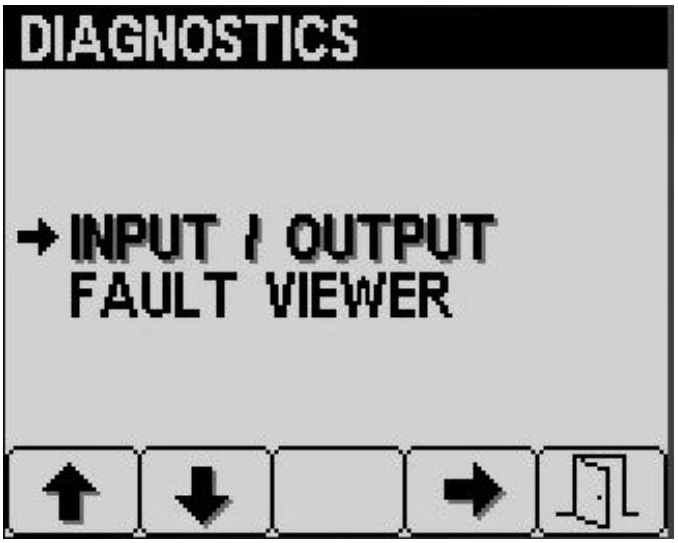


G034283
g034283

**Figure 43**

## About Screen

To access the About screen, press button 2 on the Main Menu screen (Figure 24) until you reach About, and press button 4 to select About (Figure 44).

This screen displays the model number and serial number of your machine.

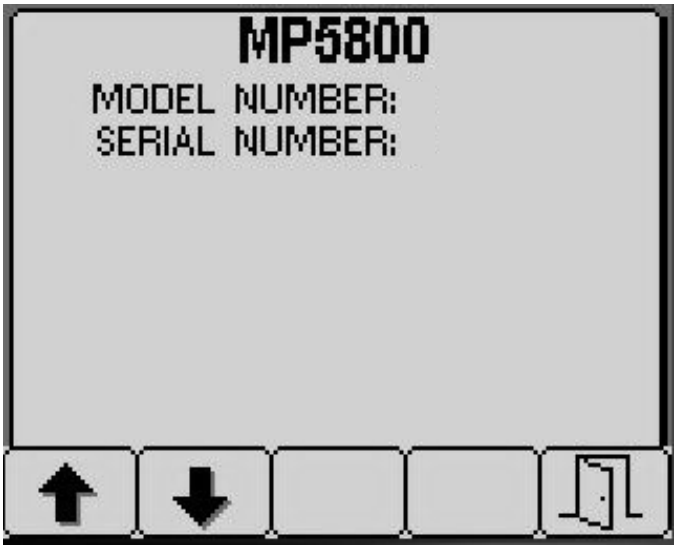


G034285
g034285

**Figure 44**

# InfoCenter Advisories

Operator advisories automatically display on the InfoCenter screen when a machine function requires additional action. For example, if you attempt to start the engine while pressing the traction pedal, an advisory displays, indicating that the traction pedal must be in the NEUTRAL position.

For each advisory that occurs, there is a condition (e.g., start prevent, engine stopped), an advisory code (number), a qualifier (the cause of the advisory displayed), and a display text (what the advisory displays as text on the screen) as shown in Figure 45. Refer to the InfoCenter advisory table that follows for more information.

**Note:** Advisories are not recorded into the fault log.

**Note:** You can clear an advisory from the display screen by pressing any of the InfoCenter keys.

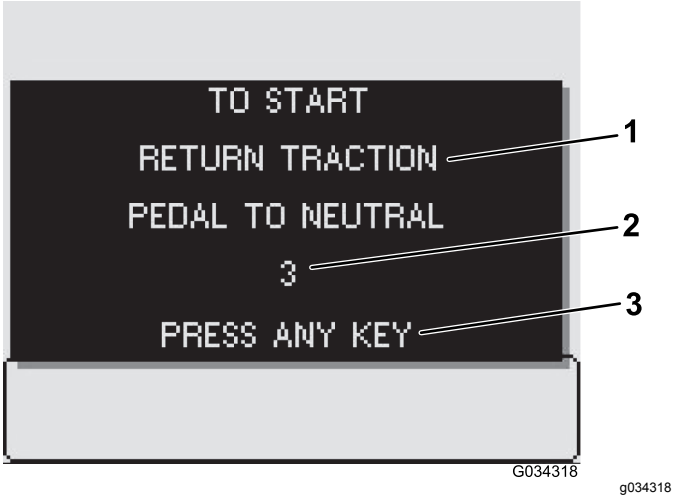


**Figure 45**

1. Display text
2. Code
3. Press any key on the InfoCenter to clear the text from the display screen.

## InfoCenter Advisory Table

| Condition | Code | Qualifier | Display Text |
|---|---|---|---|
| Start Prevented | 2 | Pump switch active | To start, turn pump off |
| Start Prevented | 3 | Not in NEUTRAL | To start, return traction pedal to neutral |
| Start Prevented | 4 | Out of seat | To start, must be seated or set the parking brake |
| Start Prevented | 5 | Starter engage timeout | To start, rest starter |
| Start Prevented | 6 | Rinse pump active | To start, turn off rinse pump |
| Engine Stopped | 102 | Out of seat | Engine stop due to operator out of seat |
| Engine Stopped | 103 | Parking brake set | Engine stop due to parking brake engaged |
| Pump Start Prevented | 202 | Boom active | To start pump, turn booms off |
| Pump Start Prevented | 203 | Out of seat and parking brake not set | To start pump, must be seated or set parking brake |
| Pump Start Prevented | 205 | Engine starting | To start pump, stop cranking engine |
| Pump Turned Off | 206 | Out of seat | To start pump, remain seated |
| Tank Status | 402 | Low spray tank volume | Tank status, volume low |
| Tank Status | 403 | Rinse pump active | Tank status, rinse pump on |
| Parameter Status | 502 | Wrong parameter value entered | Parameter status, invalid value |
| Parameter Status | 503 | A value is outside the range of accepted values | Parameter status, invalid data defaults used |
| Booms Turned Off | 802 | Speed dropped | Booms turned off, stopped or moving too slowly |

# Applying Spray

## Manual-Spray Operation

***Important:*** **To ensure that your solution remains well mixed, use the agitation feature whenever you have solution in the tank. For agitation to work, the pump must be on and the engine must be running above an idle.**

**Note:** This procedure assumes that the pump is on; refer to Filling the Spray Tank (page 29).

1. Set the master-boom switch to the OFF position.
2. Adjust the throttle to the desired position to spray.
3. Drive to the spraying location.
4. Lower the booms into position.
5. Set the individual section switches, as needed, to the ON positions.
6. Use the application-rate switch to achieve the desired spray pressure as indicated in the nozzle-selection guide provided with the sprayer.
7. Drive at the desired speed and then set the master-boom switch to the ON position to begin spraying.

   **Note:** When the tank is nearly empty, the agitation may cause foaming in the tank. In this case, turn the agitation switch to the OFF position. Alternatively, you can use an anti-foaming agent in the tank.
8. When finished spraying, set the master-boom switch to the OFF position to turn off all booms, then set the pump switch to the OFF position.

   **Note:** Return the booms to the TRANSPORT position and drive the sprayer to the cleaning area.

   ***Important:*** **Always raise the booms until they are completely supported in the boom-transport cradle (forming the 'X' transport position) and the boom cylinders are fully retracted whenever you move the sprayer from a spraying area to another or move to a storage or cleaning area.**

# Taking Proper Turf Care Precautions while Operating in Stationary Modes

***Important:*** **Under some conditions, heat from the engine, radiator, and muffler can potentially damage grass when operating the sprayer in a stationary mode. Stationary modes include tank agitation, hand spraying with a spray gun, or using a walking boom.**

Use the following precautions:

- Avoid stationary spraying when conditions are very hot and/or dry, as turf can be more stressed during these periods.
- Avoid parking on the turf while stationary spraying. Park on a cart path whenever possible.
- Minimize the amount of time the machine is left running over any particular area of turf. Both time and temperature affect how much the grass may be damaged.
- Set the engine speed as low as possible to achieve the desired pressure and flow. This minimizes the heat generated and the air velocity from the cooling fan.
- Allow heat to escape upward from the engine compartment by raising the seat assemblies during stationary operation rather than being forced out under the vehicle.

# Spraying Tips

- Do not overlap areas that you have previously sprayed.
- Watch for plugged nozzles. Replace all worn or damaged nozzles.
- Use the master-boom switch to stop the spray flow before stopping the sprayer. Once stopped, use the engine-throttle control to hold the engine speed up to keep the agitation running.
- You will obtain best results if the sprayer is moving when you turn the booms on.

# Unclogging a Nozzle

If a nozzle becomes clogged while you are spraying, you can clean it using a hand-spray bottle of water or a toothbrush.

1. Stop the sprayer on a level surface, shut off the engine, and set the parking brake.
2. Set the master-boom switch to the OFF position and then set the pump switch to the OFF position.
3. Remove the clogged nozzle and clean it using a spray bottle of water or a toothbrush.

# Selecting a Nozzle

**Note:** Refer to the nozzle-selection guide that is available through your Authorized Toro Dealer.

The turret bodies can accept up to 3 different nozzles. To select the desired nozzle perform the following:

1. Stop the sprayer on a level surface, shut off the engine, and set the parking brake.
2. Set the master-boom switch to the OFF position and set the pump switch to the OFF position.
3. Rotate the turret of the nozzles in either direction to the correct nozzle.

# Cleaning the Sprayer

## Preparing the Sprayer Tank

***Important:*** **You must always empty and clean the sprayer immediately after each use. Failure to do so may cause the chemicals to dry or thicken in the lines, clogging the pump and other components.**

Toro recommends using the approved clean rinse kit for this machine. Contact your Authorized Toro Dealer for more information.

Clean the spray system after each spraying session. To properly clean the spray system:

- Use 3 separate rinses.
- Use the cleaners and neutralizers as recommended by the chemical manufacturers.
- Use pure, clean water (no cleaners or neutralizers) for the last rinse.

1. Stop the sprayer, set the parking brake, and shut off the engine.
2. Locate the tank-drain valve on the rear of the machine (Figure 46).

   **Note:** The drain valve is to the rear of pump, attached to the support bracket.

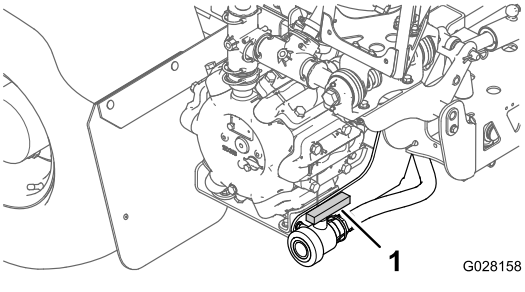


**Figure 46**

1. Tank-drain handle

Open the valve to drain any unused material from the tank and dispose of it according to local codes and the material manufacturer's instructions (Figure 47). After draining, remove the lynch pin on the bracket securing the drain valve to the machine and let the valve rest on the ground. This allows any residual material in the line to drain.

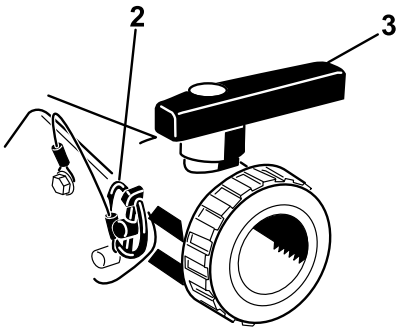


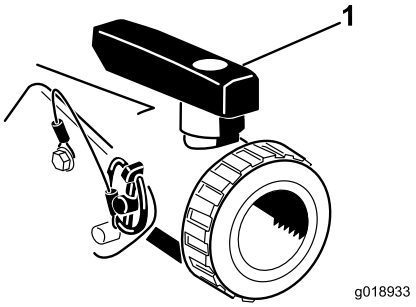


**Figure 47**

1. Valve open
2. Lynch pin
3. Valve closed

3. When the tank has drained completely, install the valve to frame with the lynch pin removed previously and close the drain valve (Figure 47).
4. Fill the tank with at least 190 L (50 US gallons) of clean, fresh water and close the cover.

   **Note:** You can use a cleaning/neutralizing agent in the water as needed. On the final rinse, use only clean, clear water.

5. Lower the booms into the SPRAY position.

## Flushing the Sprayer System

1. Start the engine and move the throttle lever to a higher idle.
2. Ensure that the agitation switch is in the ON position.
3. Set the pump switch to the ON position and use the application-rate switch to increase the pressure to a high setting.
4. Set the master-boom switch and boom-control switches to the ON positions to begin spraying.
5. Allow all the water in the tank to spray out though the nozzles.
6. Check the nozzles to ensure that they are all spraying correctly.
7. Set the master-boom switch to the OFF position.
8. If the optional spray-wand kit, hose-reel kit, and/or chemical-premix kit is installed, flush the lines and components by opening the shutoff valves and operating the controls for these accessories.
9. Set the pump switch to the OFF position, and shut off the engine.
10. Repeat steps 4 through 7 at least 2 more times to ensure that the spray system is fully cleaned.

    ***Important:*** **You must always complete this procedure at least 3 times to ensure that the spray system is fully clean, preventing damage to the system.**

## Cleaning the Exterior of the Sprayer

1. Clean the strainer; refer to Cleaning the Suction Strainer (page 25).

   ***Important:*** **If you used wettable powder chemicals, clean the strainer after each tank.**
2. Apply chemical neutralizer the boom section do the sprayer and the back area of the frame of the machine.
3. Use a garden hose to rinse off the outside of the sprayer and machine with clean water.
4. Remove the nozzles and clean them by hand.

   **Note:** Replace damaged or worn nozzles.

# Setting the Boom-Section-Bypass Valves

## Manual Mode Only

***Important:*** **When operating in Auto mode, the boom-sections-bypass shutoff valve must be closed.**

Before using the sprayer for the first time, if you change the nozzles, or as needed, calibrate the sprayer flow, speed, and set the boom-section bypass (if operating in Manual mode); refer to Calibration Screen (page 37).

**Note:** The section valves must be calibrated each time the nozzles are changed (only if operating/spraying in Manual mode).

Select an open flat area to perform this procedure.

1. Fill the spray tank halfway with clean water.
2. Lower the sprayer booms.
3. Set the parking brake.
4. Set the spray control switch to manual.
5. Set the 3 boom switches to the ON position, but leave the master-boom switch off.
6. Set the pump switch to the ON position, and turn on the agitation.
7. Increase the machine to full throttle.
8. Using the application-rate switch, adjust the application rate (pressure) to 2.75 bar (40 psi).
9. Turn off the left boom and adjust the boom-bypass knob (Figure 48) until the pressure is at the previous level.

   **Note:** The numbered indicators on the bypass knob and needle are for reference only.

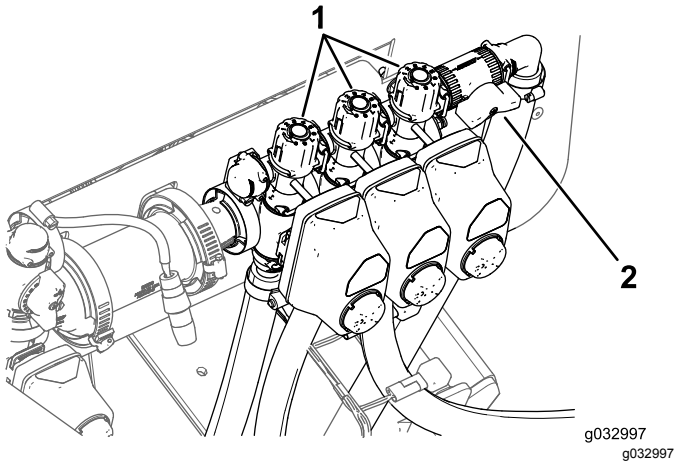


**Figure 48**

1. Boom-section-bypass adjustment knobs
2. Boom-sections-bypass-shutoff valve

10. Turn on the left boom and turn off the right boom.
11. Adjust the right boom-bypass knob (Figure 48) until the pressure is at the previous level.
12. Turn on the right boom and turn off the center boom.
13. Adjust the center boom-bypass knob (Figure 48) until the pressure is at the previous level.
14. Turn all the booms off.
15. Turn the pump off.

# Positioning the Agitation-Bypass-Valve Knob

- The agitation-bypass valve is in the full OPEN position as shown in Figure 49.
- The agitation-bypass valve is in the CLOSE (0) position as shown in Figure 49.
- The agitation-bypass valve is in an INTERMEDIATE (adjusted relative to the pressure gauge for the sprayer system) position as shown inFigure 49.

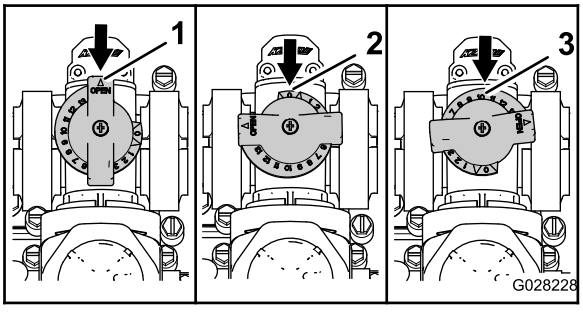


**Figure 49**

1. Open
2. Closed (0)
3. Intermediate position

# Calibrating the Agitation-Bypass Valve

**Service Interval:** Yearly—Calibrate the agitation-bypass valve.

***Important:*** **If you have the base Spray System installed turn the power switch to the OFF position.**

1. Select an open, flat area to perform this procedure.
2. Fill the spray tank halfway with clean water.
3. Verify the agitation-control valve is open.

   **Note:** If it has been adjusted, open it completely at this time.
4. Set the parking brake and start the engine.
5. Set the pump switch and the agitation switch to the ON position.
6. Move the throttle lever to the FAST position.
7. Turn the master-boom switch to the OFF position.
8. Use the application-rate switch to adjust the sprayer-system pressure to 689 kPa (100 psi).
9. Turn the agitation switch to the OFF position and read the pressure gauge.
   - If the pressure gauge indicates 689 kPa (100 psi), the agitation-bypass valve is properly calibrated.
   - If the pressure gauge indicates differently, continue to the next step.
10. Adjust the agitation-bypass valve (Figure 50) on the backside of the agitation valve until the sprayer-system pressure is 689 kPa (100 psi).

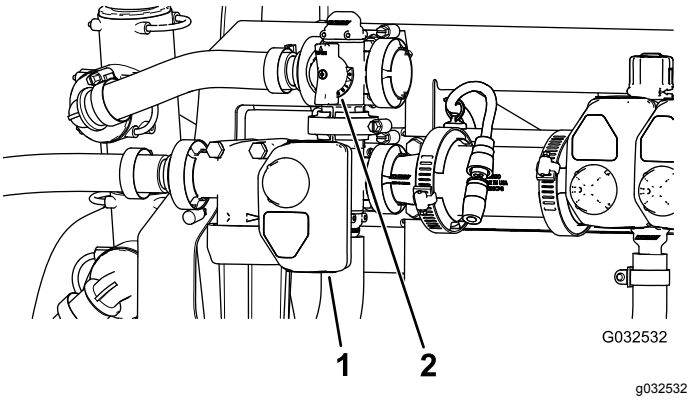


**Figure 50**

1. Actuator (agitation valve)
2. Agitation-bypass valve

11. Turn the pump switch to the OFF position.
12. Move the throttle lever to the IDLE position and turn the key switch to the OFF position.

# Locating the Pump

The pump is located near the back of the tank on the left side (Figure 51).

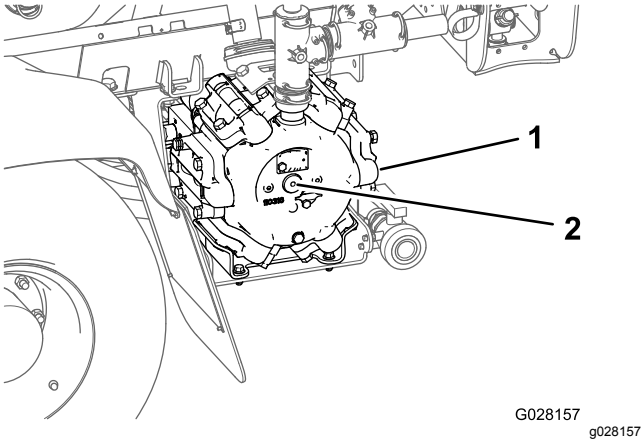


**Figure 51**

1. Pump
2. Grease fitting

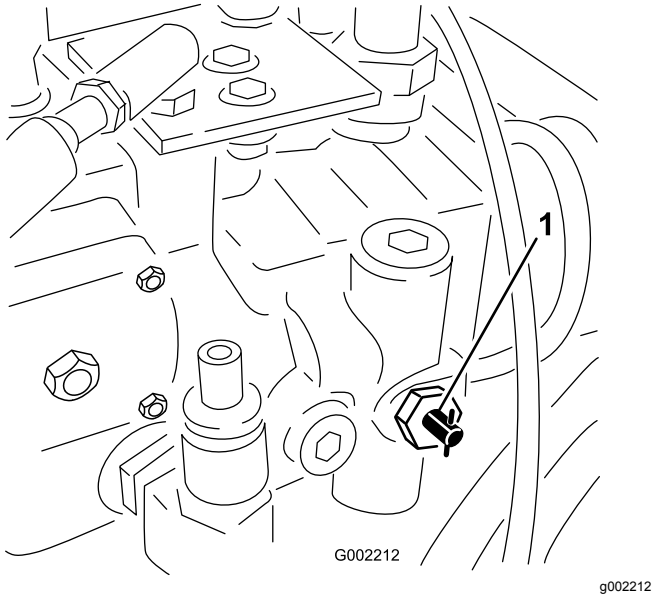


**Figure 52**

1. Tow valve

# Towing the Sprayer

In case of an emergency, the sprayer can be towed for a short distance after you open the tow valve. However, we do not recommend this as a standard procedure.

**⚠ WARNING**

**Towing at excessive speeds could cause a loss of steering control, resulting in personal injury.**

**Never tow the sprayer faster than 4.8 km/h (3 mph).**

Towing the sprayer is a 2-person job. If the machine must be moved a considerable distance, transport it on a truck or trailer; refer to Transporting the Sprayer (page 46).

1. Rotate the tow valve (Figure 52) 90° in either direction to open it.

***Important:*** **If you do not open the tow valve before towing the sprayer, you will damage the transmission.**

2. Affix a tow line to the frame; refer to the front and rear towing points in Figure 53 and Figure 54.

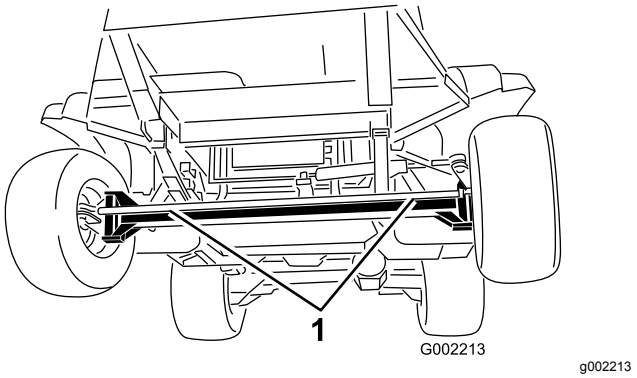


**Figure 53**

1. Front towing points

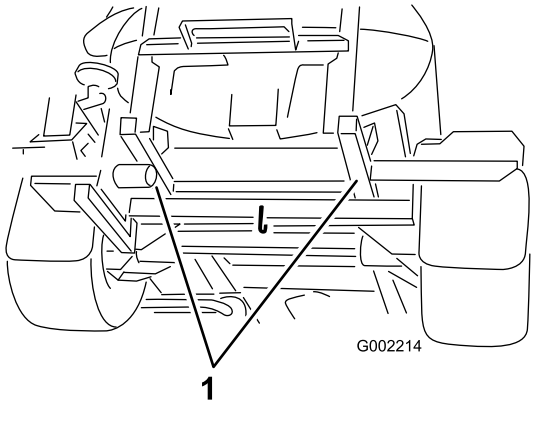


g002214

**Figure 54**

1. Rear towing points

3. Release the parking brake.
4. Tow the sprayer at less than 4.8 km/h (3 mph).
5. When finished, close the tow valve and torque it to no more than 7 to 11 N·m (5 to 8 ft-lb).

# Transporting the Sprayer

For moving the sprayer long distances, use a trailer. Secure the sprayer to the trailer. Also, ensure that the booms are tied down and secure. Figure 55 and Figure 56 illustrate the tie-down points.

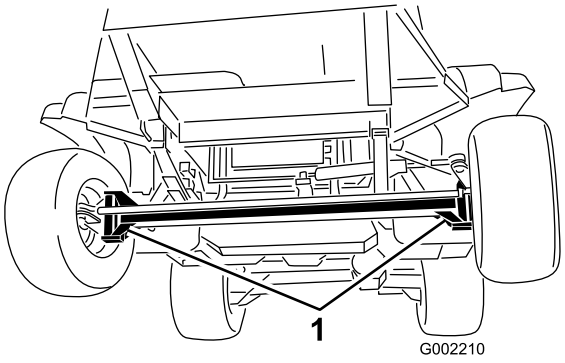


g002210

**Figure 55**

1. Tie-down points

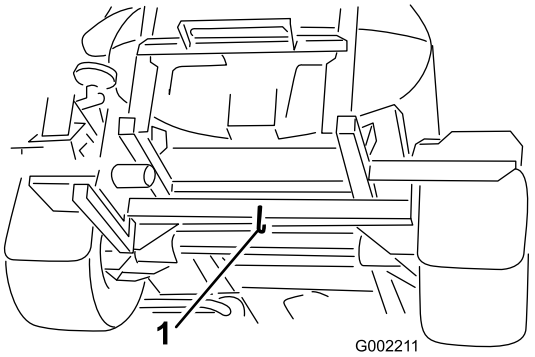


g002211

**Figure 56**

1. Rear tie-down point

# Maintenance

**Note:** Determine the left and right sides of the machine from the normal operating position.

## Recommended Maintenance Schedule(s)

| Maintenance Service Interval | Maintenance Procedure |
|---|---|
| After the first 5 hours | • Replace the hydraulic-fluid filters. |
| After the first 8 hours | • Torque the wheel lug nuts.<br>• Change the rear planetary-gearbox fluid.<br>• Check the fan/alternator belt. |
| After the first 50 hours | • Change the engine oil and oil filter.<br>• Check the fuel lines and connections. |
| After the first 200 hours | • Pack the front-wheel bearings. |
| Before each use or daily | • Check the pressure in the tires.<br>• Check the brakes.<br>• Clean the suction strainer (more often when using wettable powders).<br>• Check the tank straps.<br>• Check the air cleaner (more frequently if operating conditions are extremely dusty or sandy).<br>• Check the engine oil.<br>• Check the coolant level.<br>• Check the hydraulic-fluid level. |
| Every 50 hours | • Lubricate the pump.<br>• Lubricate all grease fittings.<br>• Check the battery-cable connections. |
| Every 100 hours | • Lubricate the boom hinges.<br>• Torque the wheel lug nuts.<br>• Inspect the condition and wear of the tires.<br>• Check the cooling-system hoses for wear and damage.<br>• Check the fan/alternator belt. |
| Every 200 hours | • Change the engine oil (including synthetic oil) and oil filter (more often when operating under heavy load or in high temperatures).<br>• Check the front wheel toe-in.<br>• Inspect all hoses and connections for damage and proper attachment.<br>• Clean the radiator fins. |

| Maintenance Service Interval | Maintenance Procedure |
|---|---|
| Every 400 hours | • Grease the actuator-rod bearings.<br>• Replace the air-filter element (more often in dusty, dirty conditions).<br>• Complete all yearly maintenance procedures specified in the engine owner's manual.<br>• Check the fuel lines and connections.<br>• Replace the fuel-filter canister.<br>• Replace the in-tank fuel filter.<br>• Drain and clean the fuel tank.<br>• Pack the front-wheel bearings.<br>• Change the planetary-gearbox fluid.<br>• Check the coolant (as directed by the manufacturer) and change if necessary.<br>• Check the coolant (as directed by the manufacturer) and change if necessary.<br>• Replace the hydraulic-fluid filters.<br>• Change the hydraulic fluid.<br>• Inspect the O-rings in the valve assemblies and replace them if necessary.<br>• Change the pressure filter.<br>• Inspect the pump diaphragm and replace if necessary (see an Authorized Toro Service Distributor).<br>• Inspect the pump check valves and replace if necessary (see an Authorized Toro Service Distributor).<br>• Inspect the nylon pivot bushings. |
| Yearly | • Flush the sprayer with clean water.<br>• Flush the sprayer with clean water.<br>• Calibrate the agitation-bypass valve. |

***Important:*** **Refer to your engine owner's manual for additional maintenance procedures.**

**Note:** Download a free copy of the electrical or hydraulic schematic by visiting www.Toro.com and searching for your machine from the Manuals link on the home page.

# Daily Maintenance Checklist

Duplicate this page for routine use.

| Maintenance Check Item | For the week of: | | | | | | |
|---|---|---|---|---|---|---|---|
| | Mon. | Tues. | Wed. | Thurs. | Fri. | Sat. | Sun. |
| Check the brake and parking-brake operation. | | | | | | | |
| Check the neutral-lockout-switch operation. | | | | | | | |
| Check the fuel level. | | | | | | | |
| Check the engine-oil level. | | | | | | | |
| Check the hydraulic-fluid level. | | | | | | | |
| Check the coolant level. | | | | | | | |
| Inspect the air filter. | | | | | | | |
| Inspect the radiator and oil cooler for debris. | | | | | | | |
| Check any unusual engine noises. | | | | | | | |
| Check any unusual operating noises. | | | | | | | |
| Check the tire pressure. | | | | | | | |
| Check for fluid leaks. | | | | | | | |
| Check all hydraulic and fluid hoses for damage, kinks, or wear. | | | | | | | |
| Check the instrument operation. | | | | | | | |
| Check the accelerator operation. | | | | | | | |
| Clean the suction strainer. | | | | | | | |
| Lubricate all grease fittings[1] | | | | | | | |
| Touch up any damaged paint. | | | | | | | |

[1]Immediately after **every** washing, regardless of the interval listed

# Notation for Areas of Concern

| Inspection performed by: | | |
|---|---|---|
| **Item** | **Date** | **Information** |
| 1 | | |
| 2 | | |
| 3 | | |
| 4 | | |
| 5 | | |
| 6 | | |
| 7 | | |
| 8 | | |
| 9 | | |
| 10 | | |

**⚠ CAUTION**

**If you leave the key in the starter switch, someone could accidently start the engine and seriously injure you or other bystanders.**

**Remove the key from the starter switch before you perform any maintenance.**

# *Pre-Maintenance Procedures*

## Raising the Sprayer

Whenever the engine is run for routine maintenance and/or engine diagnostics, the rear wheels of the sprayer should be 25 mm (1 inch) off the ground with the rear axle supported on jack stands.

**⚠ DANGER**

**A sprayer on a jack may be unstable and slip off the jack, injuring anyone beneath it.**

- **Always remove the key from the starter switch before getting off the sprayer.**
- **Block the tires when the sprayer is on a jack.**
- **Support the machine with jack stands.**

The jacking point at the front of the sprayer is under the front axle, directly under the leaf springs (Figure 57).

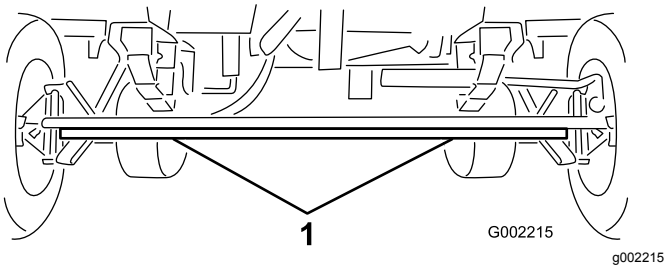


**Figure 57**

1. Front jacking points

The jacking point at the rear of the sprayer is on the rear side where the boom supports are (Figure 58).

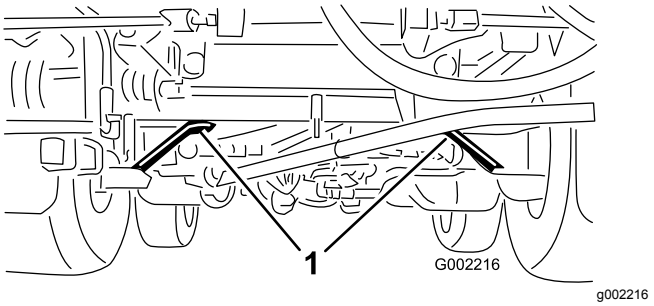


**Figure 58**

1. Rear jacking points

# Accessing the Engine

## Removing the Forward Heat Shield

1. Set the parking brake, stop the pump, shut off the engine, and remove the key from the starter switch.
2. Raise the front and back of the machine and support it with jack stands; refer to Raising the Sprayer (page 50).
3. Remove the 6 hex-head bolts and 6 washers that secure the front, forward heat shield to the chassis and remove the shield (Figure 59).

   **Note:** Retain the bolts, washers, and heat shield for installation in Installing the Engine-Heat Shield (page 51).

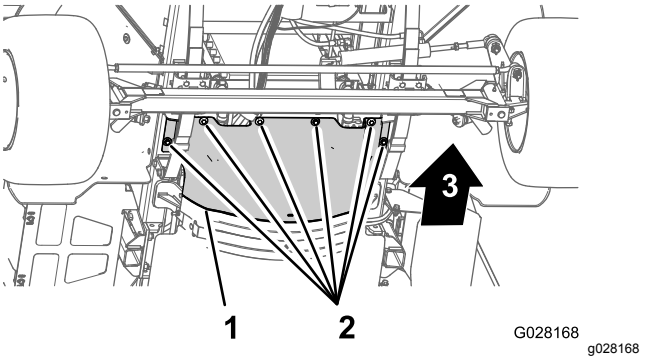


**Figure 59**

1. Forward heat shield
2. Hex-head bolts and washers

# Installing the Engine-Heat Shield

1. Align the rear flange of the forward heat shield over the forward flange of the rear heat shield (Figure 60).

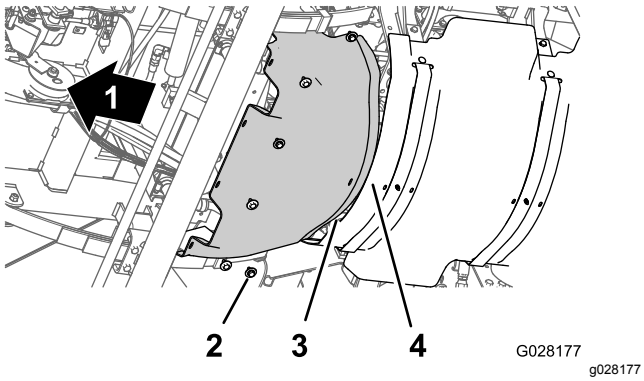


**Figure 60**

1. Front of the machine
2. Hex-head bolts and washers
3. Rear flange (forward heat shield)
4. Forward flange (rear heat shield)

2. Align the holes in the forward heat shield with the threaded holes in the chassis (Figure 60).
3. Assemble the forward heat shield to the machine with the 6 hex-head bolts and 6 washers (Figure 60) that you removed in step 3 of Removing the Forward Heat Shield (page 50).
4. Torque the bolts to 1,129 to 1,582 N·cm (100 to 140 in-lb).
5. Remove the jack stands and lower the machine.

# Removing the Seat-Base-Access Panel

1. Remove the 2 flanged-head bolts that secure the seat-base-access panel to the seat base (Figure 61).

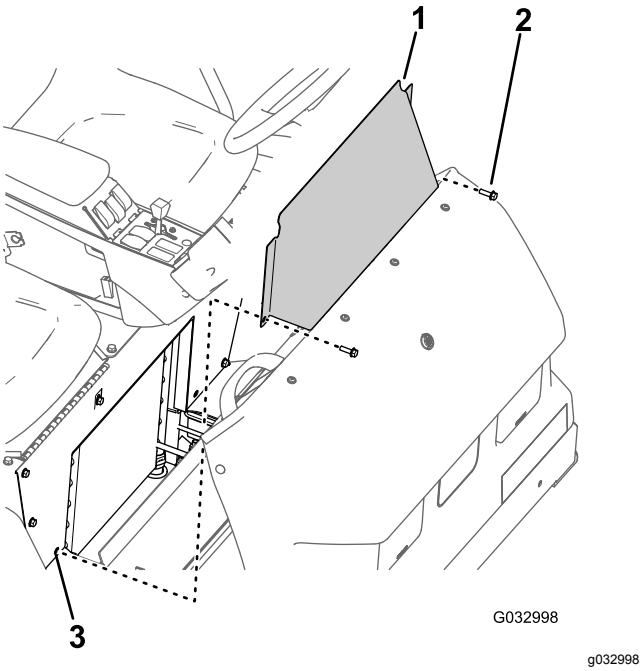


**Figure 61**

1. Seat-base-access panel
2. Flanged-head bolt
3. Hole (seat base)

2. Remove the seat-base-access panel from the machine (Figure 61).

# Installing the Seat-Base-Access Panel

1. Align the holes in the seat-base-access panel with the holes in the seat base (Figure 61).
2. Assemble the seat-base-access panel to the seat base with the 2 flanged-head bolts (Figure 61) that you removed in step 1 in Removing the Seat-Base-Access Panel (page 51).
3. Torque the bolts to 1975 to 2542 N·cm (175 to 225 in-lb).

# Lubrication

## Greasing the Sprayer

**Service Interval:** Every 50 hours—Lubricate the pump.

Every 50 hours/Yearly (whichever comes first)

**Grease Type:** No. 2 lithium grease. Toro Premium All-Purpose Grease is available from your Toro Distributor.

1. Wipe the grease fitting clean so that foreign matter cannot be forced into the bearing or bushing.
2. Pump grease into the bearing or bushing.
3. Wipe off excess grease.

   The grease fittings positions are illustrated in Figure 62 and Figure 63.

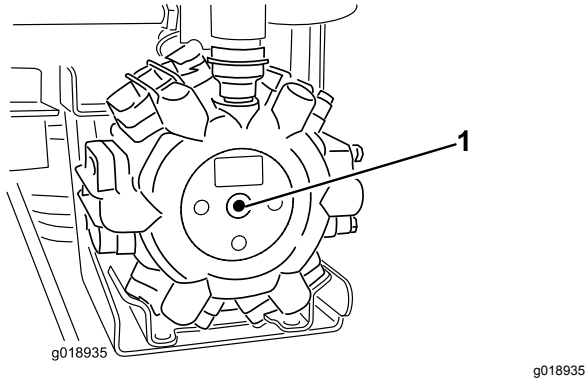


g018935

**Figure 62**

Pump Center

1. Grease point

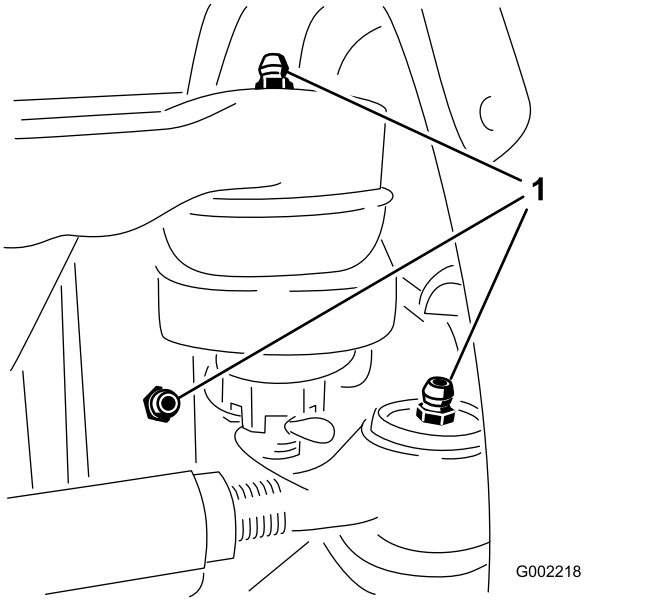


g002218

**Figure 63**

There are 3 fittings inside each front wheel.

1. Grease point

## Greasing the Boom Hinges

**Service Interval:** Every 100 hours

***Important:*** **If the boom hinge is washed with water, clear all water and debris from the hinge assembly and apply fresh grease.**

**Grease Type:** No. 2 lithium grease.

1. Wipe the grease fittings clean so that foreign matter cannot be forced into the bearing or bushing.
2. Pump grease into the bearing or bushing at each fitting (Figure 64).

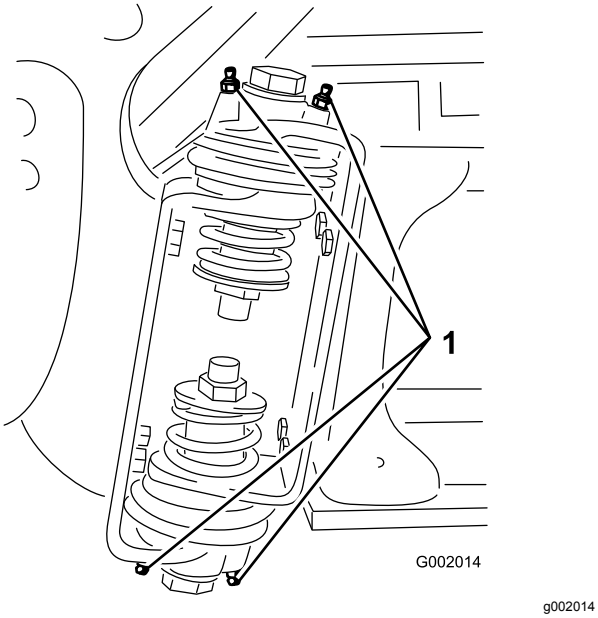


g002014

**Figure 64**
Right Boom

1. Grease fitting

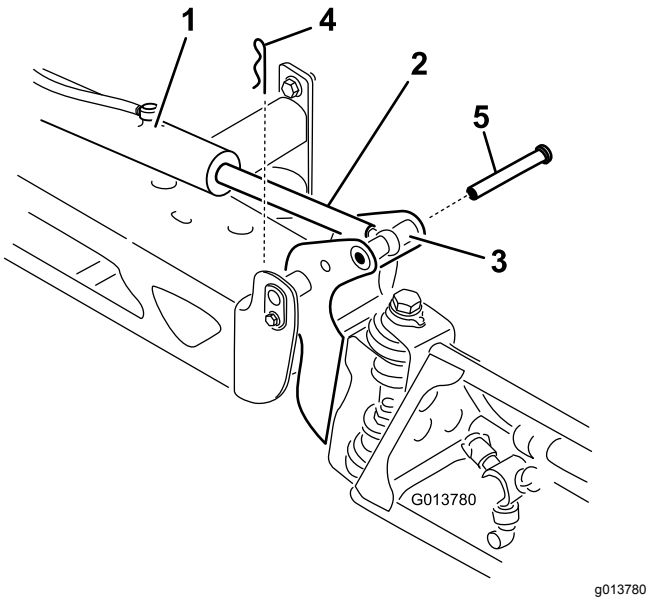


g013780

**Figure 65**

1. Actuator
2. Actuator rod
3. Boom-pivot-pin housing
4. Cotter
5. Pin

3. Wipe off excess grease.
4. Repeat the procedure for each boom pivot.

# Greasing the Actuator-Rod Bearings

**Service Interval:** Every 400 hours/Yearly (whichever comes first)

**Grease Type:** No. 2 lithium grease.

1. Extend the booms to the SPRAY position.
2. Remove the cotter pin from the pivot pin (Figure 65).
3. Lift up on the boom, remove the pin (Figure 65), and slowly lower the boom to the ground.
4. Inspect the pin for any damage, replace if necessary.
5. Manipulate the actuator-rod-bearing end and apply grease into the bearing (Figure 66).

   **Note:** Wipe off excess grease.

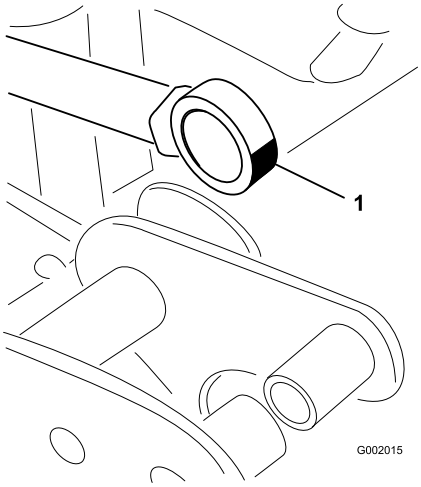


g002015

**Figure 66**
Right Boom

1. Grease bearing

6. Lift up on the boom to align the pivot with the actuator rod.
7. While holding the boom, insert the pin through the boom pivot and actuator rod (Figure 65).
8. With the pin in place, release the boom and secure the pin with the cotter removed previously.

9. Repeat the procedure for each actuator-rod bearing.

# Engine Maintenance

## Checking the Air Cleaner

**Service Interval:** Before each use or daily—Check the air cleaner (more frequently if operating conditions are extremely dusty or sandy).

1. Set the parking brake, stop the pump, shut off the engine, and remove the key from the starter switch.
2. Tilt the passenger seat forward and align the prop rod into the detent in the prop-rod-guide slot.
3. Clean the dust cap and air-cleaner body (Figure 67).

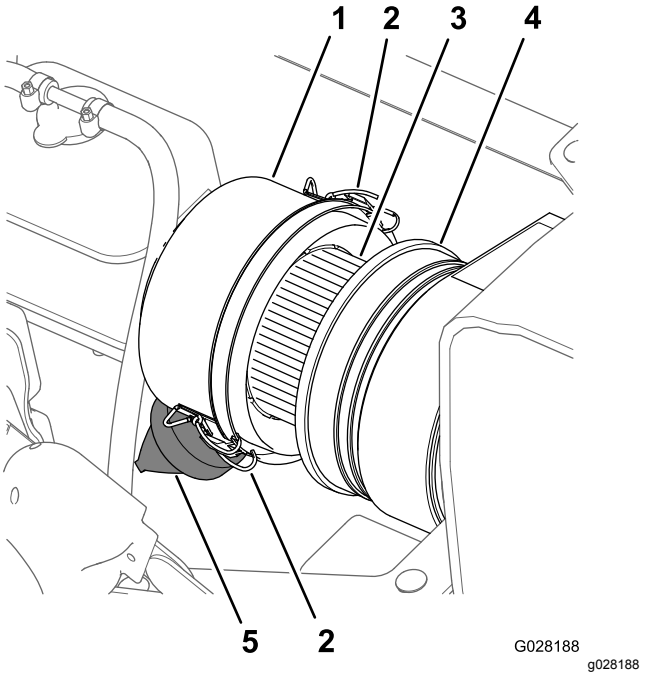


**Figure 67**

1. Dust cap
2. Latch (dust cap)
3. Air-filter element
4. Air-cleaner body
5. Dust valve

4. Check the air-cleaner body for damage that could cause an air leak (Figure 67).

   **Note:** Replace the dust cap and air-cleaner body if either is damaged.
5. Squeeze the dust valve to clear it of dirt, dust, and debris (Figure 67).
6. Loosen the 2 latches that secure the dust cap to the air-cleaner body.
7. Check the air-filter element for excessive accumulation of dust, dirt , and debris (Figure 67).

**Note:** Do not clean the air-filter element if it is dirty, replace the air-filter element if it is dirty.

8. Install the dust cap onto the air-cleaner body and secure the cap with the 2 latches (Figure 67).

   **Note:** Ensure that the dust valve is aligned between the 5 to 7 o'clock positions when viewed from the end.

9. Lower the passenger seat.

## Replacing the Air-Filter Element

**Service Interval:** Every 400 hours—Replace the air-filter element (more often in dusty, dirty conditions).

1. If you are installing a new filter, inspect the new air-filter element for shipping damage, including the sealing end of the filter.

   ***Important:*** **Do not install a damaged filter.**

2. Clean the dust cap and air-cleaner body (Figure 67).
3. Lift the coolant-overflow tank up and off the tank-support bracket (Figure 68).

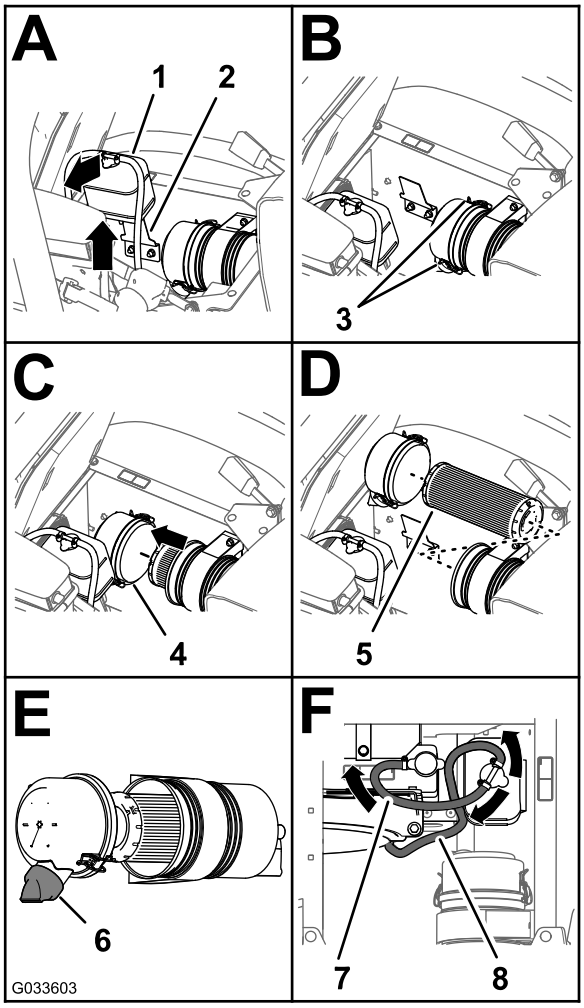


g033603

**Figure 68**

1. Coolant-overflow tank
2. Tank-support bracket
3. Latch (dust cap)
4. Dust cap
5. Air-filter element
6. Dust valve (5 to 7 o'clock position)
7. Pressure-relief hose
8. Tank-vent hose

4. Loosen the 2 latches that secure the dust cap to the air-cleaner body (Figure 68).
5. Gently slide the old filter element out of the air-cleaner body to reduce the amount of dust dislodged.

   **Note:** Avoid knocking the filter element against the air-cleaner body.

6. Clean the inside of the dust cap, air-cleaner body, and dust valve with a damp rag (Figure 67 and Figure 68).
7. Insert the air-filter element into the air-cleaner body (Figure 68).

   **Note:** Ensure that the filter is seated in the air-cleaner body properly by applying pressure to the outer rim of the filter element when you install it. Do not press on the flexible center part of the filter.

8. Install the cover onto the air-cleaner body and secure the cover with the 2 latches (Figure 68).

   **Note:** Ensure that the dust valve is aligned between the 5 and 7 o'clock positions when viewed from the end (Figure 68).

9. Align the coolant-overflow tank to the tank-support bracket and seat the tank firmly (Figure 68).

   ***Important:*** **Ensure that the pressure-relief hose is routed rearward, and the tank-vent hose is round forward and down.**

10. Lower the passenger seat.

# Servicing the Engine Oil

**Service Interval:** After the first 50 hours—Change the engine oil and oil filter.

Every 200 hours—Change the engine oil (including synthetic oil) and oil filter (more often when operating under heavy load or in high temperatures).

Every 400 hours/Yearly (whichever comes first)—Complete all yearly maintenance procedures specified in the engine owner's manual.

**Crankcase oil capacity:** 4.6 L (4.9 US qt) with the filter.

**Engine oil specification:**

- Oil type—API service CH-4, CI-4 or higher.
- Preferred oil viscosity—SAE 15W40 (above 0°F)
- Alternate oil viscosity—SAE 10W30 or 5W30 (all temperatures)

Toro Premium Engine Oil is available from your distributor in either 15W40 or 10W30 viscosity. Refer to the *Parts Catalog* for part numbers.

## Checking the Engine Oil

**Service Interval:** Before each use or daily

**Note:** The best time to check the engine oil is when the engine is cool, before it has been started for the day. If it has already been run, allow the oil to drain back down to the sump for at least 10 minutes before checking.

The engine is shipped with oil in the crankcase; however, the level of oil must be checked before you first start the engine and after you have run it.

1. Position the machine on a level surface.
2. Remove the dipstick, located under the passenger seat, and wipe it with a clean rag (Figure 69).

   **Note:** Insert the dipstick into the tube and make sure that it is seated fully. Remove the dipstick and check the oil level.

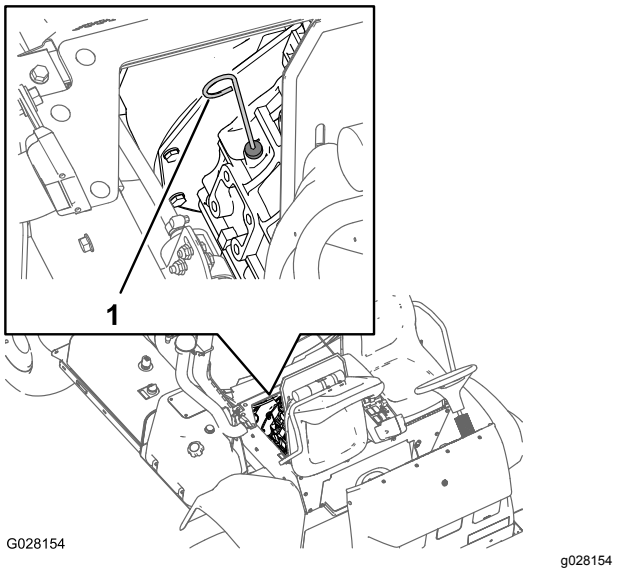


**Figure 69**

1. Dipstick

3. If the oil level is low, remove the filler cap from the valve cover (Figure 70) and pour oil into the filler neck until the oil level is up to the FULL mark on the dipstick.

   **Note:** Add the oil slowly and check the level often during this process. Do not overfill.

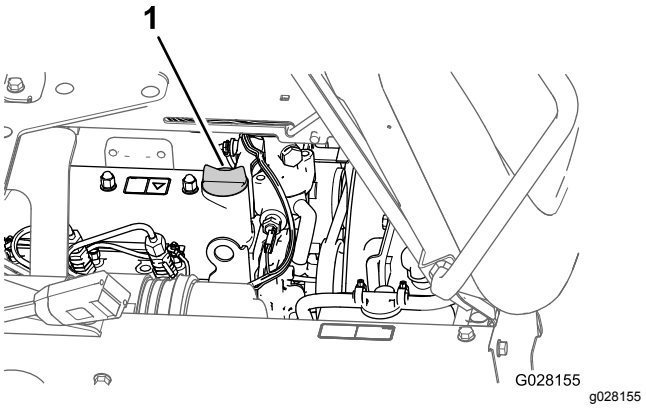


**Figure 70**

1. Oil-filler cap

4. Install the oil-filler cap.
5. Install the dipstick firmly in place.

## Changing the Engine-Oil Filter

1. Remove the forward heat shield; refer to Removing the Forward Heat Shield (page 50).
2. Raise the seats.

**⚠ CAUTION**

**Components under the seat will be hot if the sprayer has been running. If you touch hot components, you may be burned.**

**Allow the sprayer to cool before performing maintenance or touching components under the hood.**

3. Align a drain pan under the engine-oil filter (Figure 71).

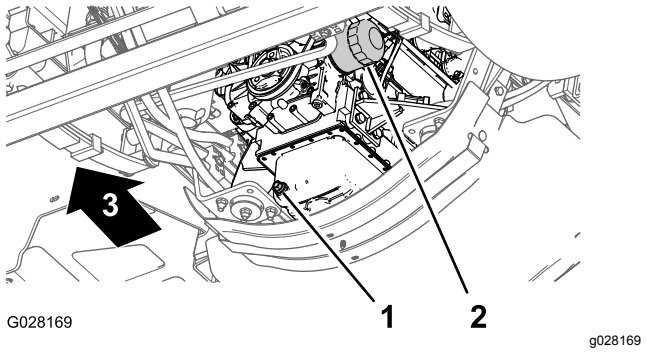


**Figure 71**

1. Drain plug
2. Engine-oil filter

4. Remove the old oil filter (Figure 71).

   **Note:** Dispose of the used oil filter at a certified recycling center.

5. Clean the surface of the oil-filter adapter of the engine with a rag.
6. Fill the oil filter with the specified oil.

   **Note:** Allow the filter element to saturate with oil.

7. Apply a thin coat of the specified oil to the rubber gasket on the replacement oil filter.
8. Install the oil filter to the filter adapter, turn the oil filter clockwise until the rubber gasket contacts the filter adapter, and then tighten the filter an additional 1/2 turn (Figure 71).

   **Note:** Do not overtighten the oil filter.

9. Wipe clean any residual oil.

## Changing the Engine Oil

1. Align a drain pan under the drain plug (Figure 71).
2. Remove the drain plug (Figure 71) and allow the oil to drain completely.

   **Note:** Check the drain-plug seal for wear and damage; replace the seal if it is worn or damaged.

   **Note:** Dispose of the used oil at a certified recycling center.

3. Install the drain plug into the drain port of the engine-oil pan and tighten the plug to 33 to 37 N·m (24 to 27 ft-lb).
4. Tilt the passenger seat forward and align the prop rod into the detent in the prop-rod-guide slot.
5. Remove the oil-filler cap from filler neck of the valve cover of the engine (Figure 72) and slowly pour approximately 80% of the specified amount of oil into filler neck.

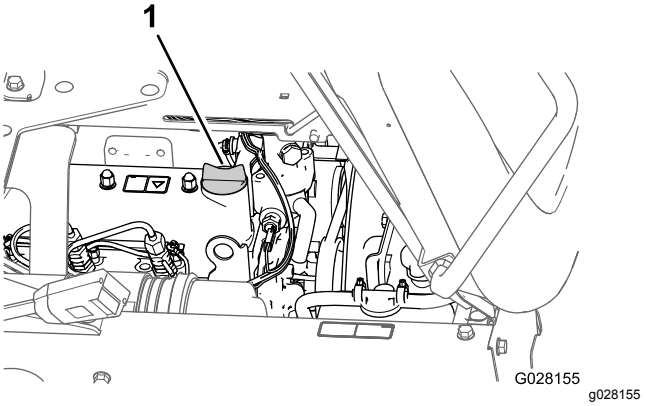


**Figure 72**

1. Oil-filler cap

6. Remove the dipstick and check the oil level in the engine (Figure 69).
7. Slowly add additional specified oil to bring the oil level to the FULL mark on the dipstick (Figure 69).

   ***Important:*** **Overfilling the engine with oil may cause damage to the engine.**
8. Install the oil-filler cap into the filler neck (Figure 72).
9. Install the engine-heat shield; refer to Installing the Engine-Heat Shield (page 51).

# *Fuel System Maintenance*

**⚠ DANGER**

**Under certain conditions, diesel fuel and fuel vapors are highly flammable and explosive. A fire or explosion from fuel can burn you and others and can cause property damage.**

- **Use a funnel and fill the tank outdoors, in an open area, when the engine is off and is cold. Wipe up any fuel that spills.**
- **Do not fill the fuel tank completely full. Add fuel to the fuel tank until the level is 25 mm (1 inch) below the bottom of the filler neck. This empty space in the tank allows the fuel to expand.**
- **Never smoke when handling fuel, and stay away from an open flame or where fuel fumes may be ignited by a spark.**
- **Store fuel in a clean, safety-approved fuel container and keep the cap in place.**

## Checking the Fuel Line and Connections

**Service Interval:** After the first 50 hours

Every 400 hours/Yearly (whichever comes first)

Inspect the lines and connections for deterioration, damage, or loose connections.

## Bleeding the Fuel System

**Note:** Ensure that the fuel tank is at least half full.

1. Set the parking brake, stop the pump, shut off the engine, and remove the key from the starter switch.
2. Remove the forward heat shield; refer to Removing the Forward Heat Shield (page 50).
3. Tilt the passenger seat forward and align the prop rod into the detent in the prop-rod-guide slot.
4. Align a drain pan under the fuel filter; refer to Figure 75 in Replacing the Water-Separator Filter (page 60).
5. Loosen the vent plug at the top of the fuel/water separator (Figure 73).

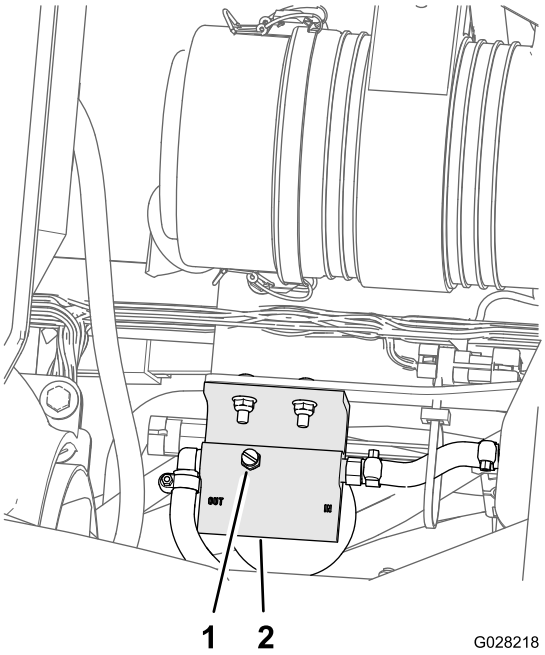


**Figure 73**

1. Vent plug
2. Top of fuel/water separator

6. Turn the key in the starter switch to the ON position.

   **Note:** The electric fuel pump will begin forcing air out around the vent plug. Leave the key in the ON position until a solid stream of fuel flows out around the vent plug.

7. Tighten the vent plug (Figure 73) and turn the starter switch to the OFF position.
8. Align the drain pan under the fuel-injection pump portion of the engine (Figure 74).

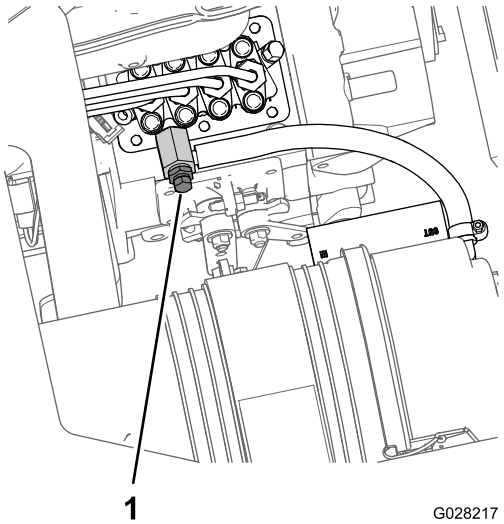


**Figure 74**

1. Bleed screw (fuel-injection pump)

9. Open the air-bleed screw at the fuel-injection pump (Figure 74).
10. Turn the key in the starter switch to the ON position.

    **Note:** Electric fuel pump will begin operation, thereby forcing air out around air-bleed screw on the fuel-injection pump.

11. Leave the key in the ON position until a solid stream of fuel flows out around the air-bleed screw (Figure 74).
12. Tighten the air-bleed screw (Figure 74) and turn the key to the OFF position.

**Note:** Normally, the engine should start after you bleed the fuel system. However, if the engine does not start, there may be air trapped between the injection pump and the injectors; refer to Bleeding Air from the Injectors (page 59).

# Bleeding Air from the Injectors

You should perform this procedure only after you have purged the air in the fuel system and the engine does not start; refer to Bleeding the Fuel System (page 58).

1. Align a drain pan under the right side of the engine
2. Loosen the tube nut at the No. 1 fuel-injector nozzle and holder assembly.
3. Move the throttle to the FAST position.
4. Turn the key in the key switch to the START position and watch the fuel flow around the connector.
5. Turn the key to the OFF position when you observe a solid flow of fuel.
6. Tighten the tube nut.
7. Clean residual fuel from area around the fuel injector.
8. Repeat steps 2 through 7 for the remaining fuel-injector nozzles.
9. Install the forward heat shield; refer to Installing the Engine-Heat Shield (page 51).

# Servicing the Fuel Filters

## Replacing the Water-Separator Filter

**Service Interval:** Every 400 hours

1. Remove the forward heat shield; refer to Removing the Forward Heat Shield (page 50).
2. Place a drain pan under the water-separator filter (Figure 75).

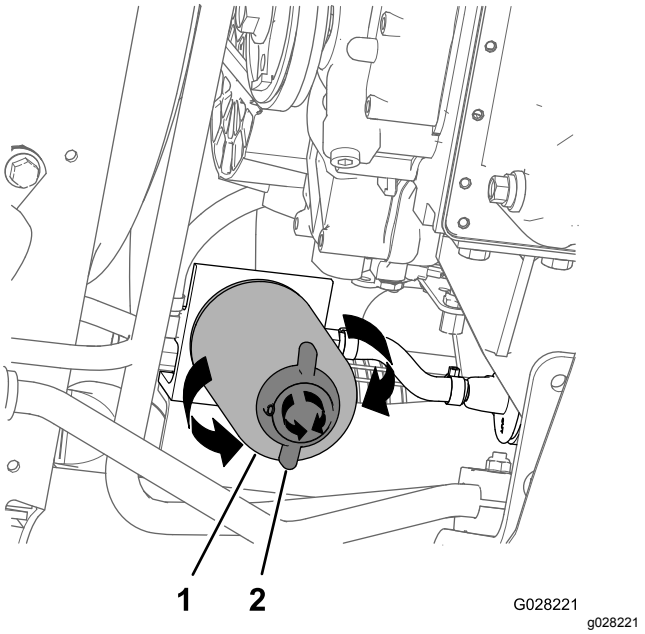


**Figure 75**

1. Water-separator filter
2. Drain valve

3. Rotate the drain valve at the bottom of the water-separator filter counterclockwise (Figure 75).

   **Note:** Allow the fuel to drain from the filter completely, then close the valve.
4. Clean the area around the water-separator filter and filter-adapter mount (Figure 75).
5. Remove the water-separator filter (Figure 75).

   **Note:** Dispose of the used fuel and filter canister at a certified recycling center.
6. Clean the mounting surface of the filter adapter.
7. Lubricate the gasket on the water-separator-filter canister with clean engine oil.
8. Install the filter canister by hand until the gasket contacts the mounting surface, then rotate the filter an additional 1/2 turn.
9. Ensure that the drain valve at the bottom of the water-separator filter is rotated clockwise tightly (Figure 75).

## Replacing the In-Tank Fuel Filter

**Service Interval:** Every 400 hours

### Removing the In-Tank Fuel Filter

**Note:** The fuel filter is a part of the standpipe assembly.

1. Set the parking brake, stop the pump, shut off the engine, and remove the key from the starter switch.
2. Remove the 4 screws (#10 x 3/4 inch) that secure the cover to the top of the fuel tank and remove the cover (Figure 76).

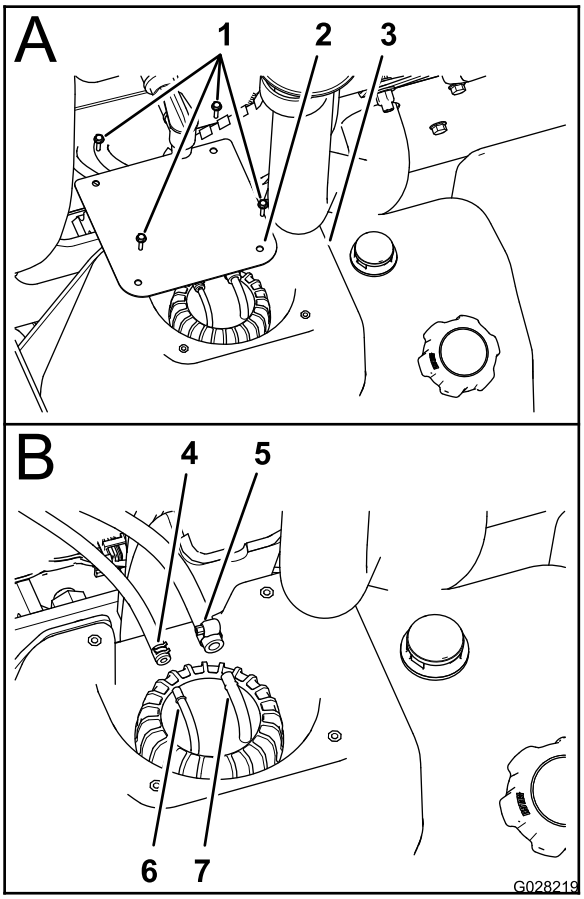


**Figure 76**

1. Screws (#10 x 3/4 inch)
2. Cover
3. Fuel tank
4. Clamp—6.4 mm (1/4 inch) fuel hose
5. Clamp—8 mm (5/16 inch) fuel hose
6. Hose fitting—6.4 mm (1/4 inch)
7. Hose fitting—8 mm (5/16 inch)

3. Loosen the clamps that secure the 2 fuel hoses to the 2 hose fittings at the top of the standpipe assembly (Figure 76).

4. Disconnect the 2 hoses from the hose fittings and allow any fuel in the hoses to drain into an approved fuel container (Figure 76).
5. Rotate the standpipe cap counterclockwise the remove the cap (Figure 77).

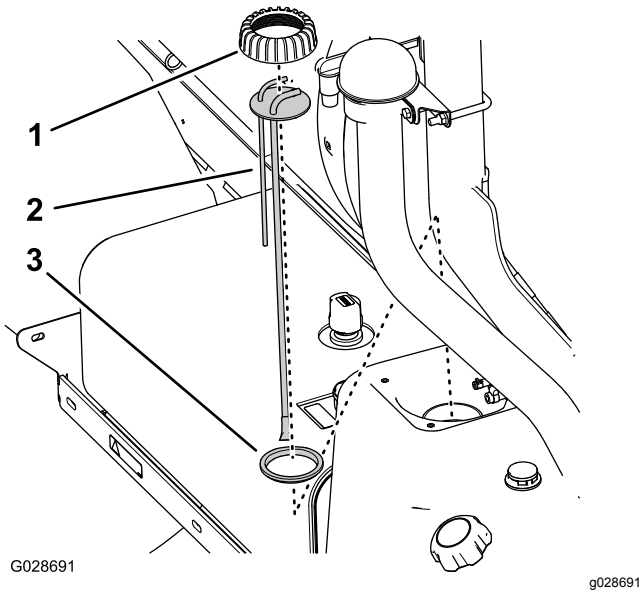


**Figure 77**

1. Fuel-standpipe/sender cap
2. Fuel-standpipe/sender assembly
3. Seal

6. Lift the fuel-standpipe/sander assembly from the fuel tank (Figure 77).

   **Note:** Discard the old standpipe/sender assembly.

### Installing the In-Tank Fuel Filter

**Note:** Obtain the new standpipe assembly from your local Authorized Toro Dealer. You may need a new seal to secure the elbow fitting and standpipe assembly to the top of the fuel tank.

1. Assemble the standpipe cap over the standpipe and the standpipe to the seal (Figure 77).
2. Align the cap, standpipe, and seal to the tank and carefully insert the new standpipe assembly into the fuel tank (Figure 77).

   **Note:** Align the hose fittings toward the centerline of the machine.
3. Thread the cap onto the neck of the fuel tank and tighten the cap hand-tight (Figure 77).
4. Assemble the 6.4 mm (1/4 inch) fuel hose onto the 6.4 mm (1/4 inch) hose fitting and secure the hose to the fitting with the hose clamp (Figure 76).
5. Assemble the 8 mm (5/16 inch) fuel hose onto the 8 mm (5/16 inch) hose fitting and secure the hose to the fitting with the hose clamp (Figure 76).
6. Assemble the cover to the tank with the 4 screws (#10 x 3/4 inch) that you removed in step 2 of Removing the In-Tank Fuel Filter (page 60).
7. Torque the screws to 11 N·cm (10 in-lb).

# Draining the Fuel Tank

**Service Interval:** Every 400 hours/Yearly (whichever comes first)

Drain and clean the fuel tank if the fuel system becomes contaminated or if you plan to store the machine for an extended period. When cleaning the fuel tank, use fresh, clean fuel to flush out the tank.

1. Transfer the fuel from the tank into an approved fuel container using a siphon pump, or remove the tank from the machine and pour the fuel out the tank-fill spout into the fuel container.

   **Note:** If you remove the fuel tank, remove the fuel supply and return hoses from the standpipe assembly before removing the tank; refer to steps 1 though 4 Removing the In-Tank Fuel Filter (page 60).
2. Replace the fuel filters; refer to the Servicing the Fuel Filters (page 60).
3. Flush the tank with fresh, clean fuel, if necessary.
4. Install the tank if you removed it; refer to steps 1 through 5 in Removing the In-Tank Fuel Filter (page 60).
5. Fill the tank with fresh, clean fuel.

# *Electrical System Maintenance*

## Replacing the Fuses

The fuse block for the electrical system is located beneath the operator's seat (Figure 78).

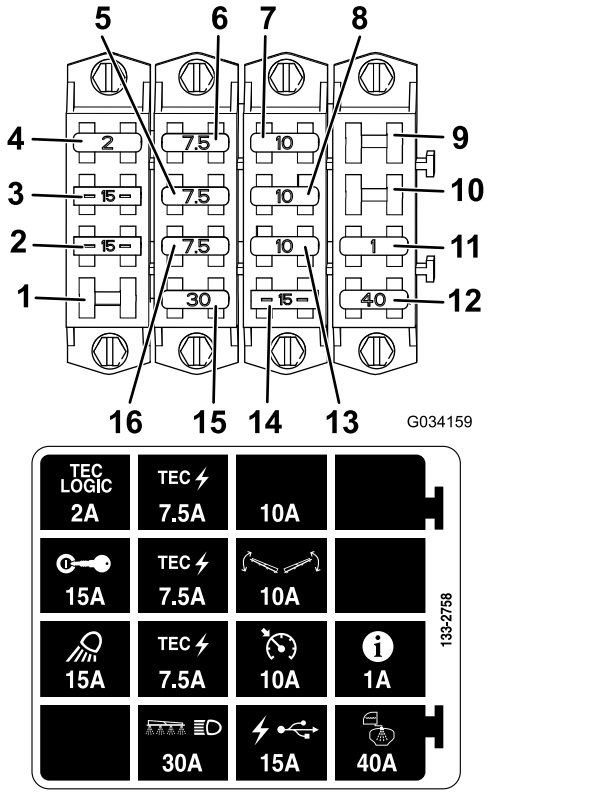


**Figure 78**

1. Open slot
2. Work light
3. Ignition
4. Tec Logic
5. Tec power
6. Tec power
7. Extra fuse slot
8. Boom control
9. Open slot
10. Open slot
11. InfoCenter
12. Tank spray
13. Cruise control
14. USB power
15. Boom and headlight
16. Tec power

## Servicing the Battery

**Service Interval:** Every 50 hours—Check the battery-cable connections.

**WARNING**

**CALIFORNIA**
**Proposition 65 Warning**

**Battery posts, terminals, and related accessories contain lead and lead compounds, chemicals known to the State of California to cause cancer and reproductive harm. *Wash hands after handling.***

Always keep the battery clean and fully charged. Use a paper towel to clean the battery and battery box. If the battery terminals are corroded, clean them with a solution of 4 parts water and 1 part baking soda. Apply a light coating of grease to the battery terminals to prevent corrosion.

Voltage: 12 V with 690 A (cold cranking) at -18°C (0°F)

## Removing the Battery

1. Position the sprayer on a level surface, set the parking brake, stop the pump, shut off the engine, and remove the key from the starter switch.
2. Remove the battery cover and disconnect the negative (black) ground cable from the battery post (Figure 79).

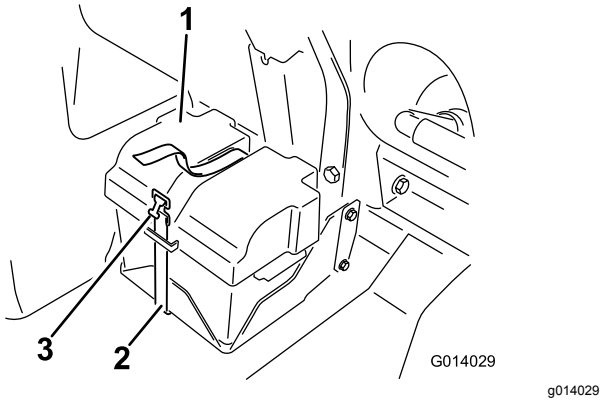


**Figure 79**

1. Battery cover
2. Strap
3. Buckle

**⚠ WARNING**

**Incorrect battery cable routing could damage the sprayer and cables causing sparks. Sparks can cause the battery gasses to explode, resulting in personal injury.**

- **Always disconnect the negative (black) battery cable before disconnecting the positive (red) cable.**
- **Always connect the positive (red) battery cable before connecting the negative (black) cable.**

**⚠ WARNING**

**Battery terminals or metal tools could short against metal sprayer components causing sparks. Sparks can cause the battery gasses to explode, resulting in personal injury.**

- **When removing or installing the battery, do not allow the battery terminals to touch any metal parts of the sprayer.**
- **Do not allow metal tools to short between the battery terminals and metal parts of the sprayer.**
- **Always keep the battery strap in place to protect and secure the battery.**

3. Disconnect the positive (red) cable from the battery post.
4. Remove the battery.

## Installing the Battery

1. Set the battery on the battery box so that the battery posts are away from the sprayer.
2. Connect the positive (red) cable to the positive (+) battery post and the negative (black) cable to the negative (–) battery post using the bolts and nuts.
3. Slide the rubber boot over both battery posts.
4. Install the battery cover and secure it with the strap removed previously (Figure 79).

   ***Important:*** **Always keep the battery retainer in place to protect and secure the battery.**

## Charging the Battery

***Important:*** **Always keep the battery fully charged. This is especially important to prevent battery damage when the temperature is below 0°C (32°F).**

1. Remove the battery from the chassis; refer to Removing the Battery.
2. Connect a 3 to 4 A battery charger to the battery posts and charge the battery at a rate of 3 to 4 A for 4 to 8 hours (12 V).

   ***Important:*** **Do not overcharge the battery.**

   **⚠ WARNING**

   **Charging the battery produces gasses that can explode.**

   **Never smoke near the battery and keep sparks and flames away from battery.**

3. Install the battery in the chassis; refer to Installing the Battery (page 63).

## Storing the Battery

If you are storing the machine for more than 30 days, remove the battery and charge it fully. Either store it on a shelf or on the machine. Leave the cables disconnected if it is stored on the machine. Store the battery in a cool atmosphere to avoid quick deterioration of the charge in the battery. To prevent the battery from freezing, ensure that it is fully charged.

# *Drive System Maintenance*

## Inspecting the Wheels/Tires

**Service Interval:** After the first 8 hours—Torque the wheel lug nuts.

Every 100 hours—Torque the wheel lug nuts.

Every 100 hours—Inspect the condition and wear of the tires.

After the first 200 hours—Pack the front-wheel bearings.

Every 400 hours—Pack the front-wheel bearings.

Torque the front lug nuts to 75 to 102 N·m (55 to 75 ft-lb) and the rear lug nuts to 95 to 122 N·m (75 to 90 ft-lb).

Operating accidents, such as hitting curbs, can damage a tire or rim and also disrupt wheel alignment, so inspect the condition of the tires after an accident.

## Changing the Planetary-Gearbox Fluid

**Service Interval:** After the first 8 hours

Every 400 hours

Use high quality, SAE 85W-140 weight gear lube.

1. Position the sprayer on a level surface with the rear wheels positioned for draining (Figure 80).

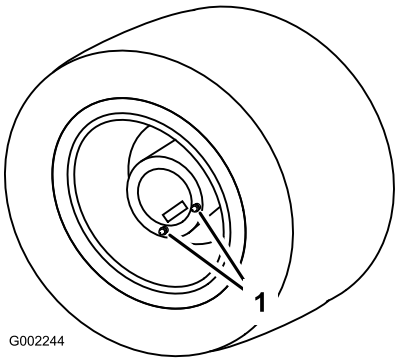


g002244

**Figure 80**

1. Drain plugs, positioned for draining

2. Set the parking brake, stop the pump, shut off the engine, and remove the key from the starter switch.
3. Place a drain pan under the drain plugs and remove them from the wheel (Figure 80).
4. Place a drain pan under the inner drain plug and remove it (Figure 81).

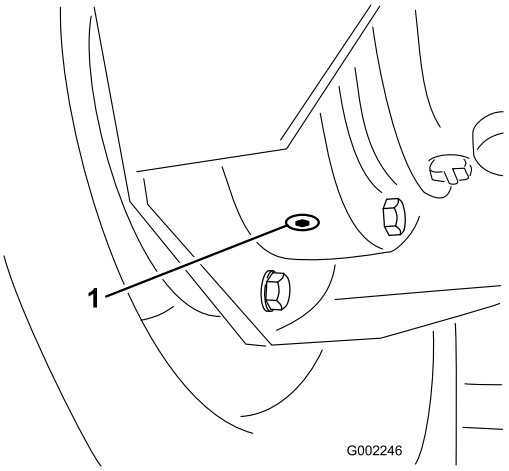


g002246

**Figure 81**

1. Inner drain plug

5. Move the vehicle slowly until the wheel is positioned for filling (Figure 82).

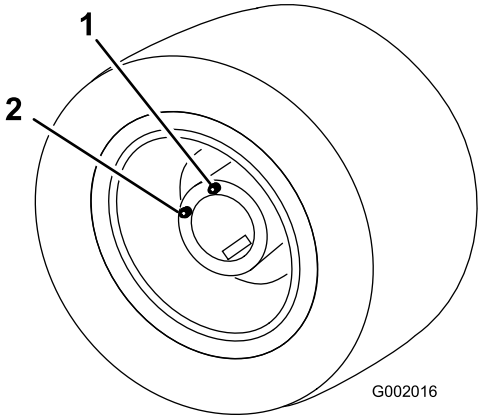


g002245

**Figure 82**

1. Upper hole—add fluid here
2. Lower hole

6. Set the parking brake, stop the pump, shut off the engine, and remove the key from the starter switch.
7. Pour SAE 85W-140 weight gear lube into the upper hole until it begins to come out the lower hole.
8. Replace and tighten all drain plugs.
9. Repeat steps 3 through 9 for the other rear wheel.
10. Dispose of the used oil at a certified recycling center.

# Adjusting the Front Wheel Toe-in

**Service Interval:** Every 200 hours/Yearly (whichever comes first)

The toe-in should be 0 to 3 mm (0 to 1/8 inch).

1. Check and fill all tires; refer to Checking the Tire Pressure (page 24).
2. Measure the distance between both of the front tires at the axle height at both the front and rear of the front tires (Figure 83).

   **Note:** The distance between the front of the tires should be 0 to 3 mm (0 to 1/8 inch) less than the distance between the back side of the front tires.

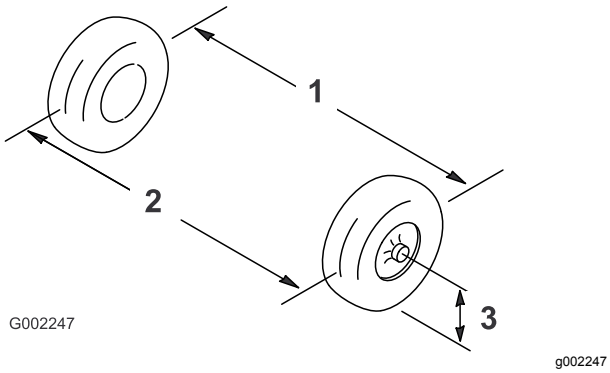


**Figure 83**

1. Tire centerline—back
2. Tire centerline—front
3. Axle centerline

3. If the measurement does not fall within the specified range, loosen the jam nuts at both ends of the tie rod (Figure 84).

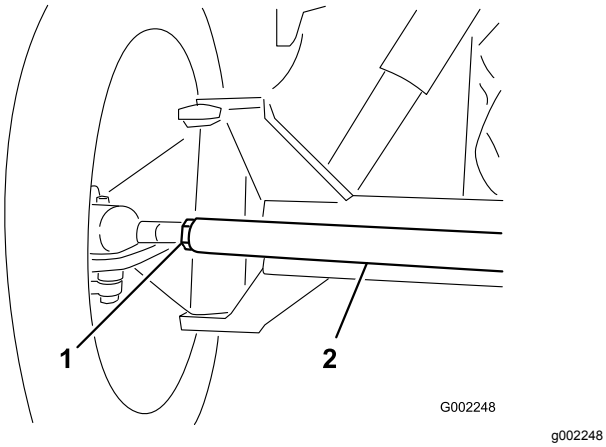


**Figure 84**

1. Jam nut
2. Tie rod

4. Rotate the tie rod to move the front of the tire inward or outward.
5. Tighten the tie-rod jam nuts when the adjustment is correct.
6. Ensure that there is full travel of the steering wheel in both directions.

# Cooling System Maintenance

## Servicing the Cooling System

**Service Interval:** Every 100 hours—Check the cooling-system hoses for wear and damage.

Every 400 hours/Yearly (whichever comes first)—Check the coolant (as directed by the manufacturer) and change if necessary.

**Cooling system capacity:** 5.5 L (5.8 US qt)

**Coolant type:** a solution of 50% water and 50% permanent ethylene-glycol antifreeze

***Important:*** **Do not add coolant to an overheated engine until the engine has fully cooled. Adding coolant to an overheated engine may crack the engine block.**

Check the engine-coolant concentration as directed by the coolant manufacturer.

## Checking the Coolant Level

**Service Interval:** Before each use or daily

**⚠ CAUTION**

**If the engine has been running, the coolant may be hot and pressurized. If you open the radiator cap when the coolant is hot, it could spray out and severely burn you or bystanders.**

**Allow the engine to cool for at least 15 minutes before opening the radiator cap.**

1. Position the sprayer on a level surface.
2. Set the parking brake, stop the pump, shut off the engine, and remove the key from the starter switch.
3. Carefully remove the radiator cap and the expansion-tank cap (Figure 85).

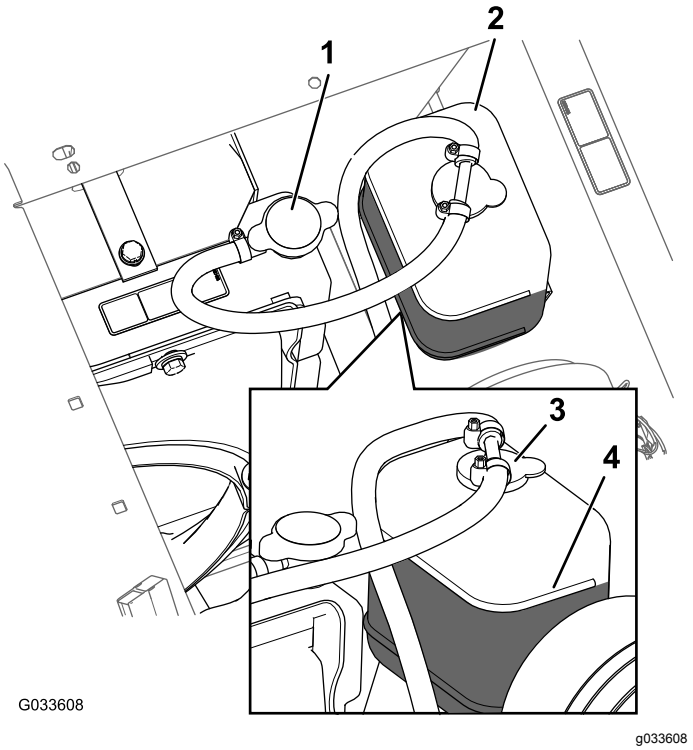


**Figure 85**

1. Radiator cap
2. Expansion tank
3. Expansion-tank cap
4. Full line mark

4. Check the coolant level in the radiator and in the expansion tank.

   **Note:** The radiator should be filled to the top of the filler neck and the expansion tank filled to the FULL mark on the tank (Figure 85).

5. If the coolant level is low, remove the expansion-tank cap and the radiator cap, and fill the expansion tank to the FULL mark and the radiator to the top of the filler neck (Figure 85).

   ***Important:*** **Do not overfill the expansion tank.**

   ***Important:*** **Do not use water only or an alcohol/methanol-based coolant.**

6. Install the radiator cap and the expansion-tank cap (Figure 85).

## Changing the Cooling-System Fluid

**Service Interval:** Every 400 hours—Check the coolant (as directed by the manufacturer) and change if necessary.

1. Position the sprayer on a level surface, set the parking brake, stop the pump, shut off the engine, and remove the key from the starter switch.

2. When the engine is cool, remove the radiator cap (Figure 85).
3. Place a large drain pan under the radiator.
4. Open the drain valve and drain the coolant into the pan (Figure 86).

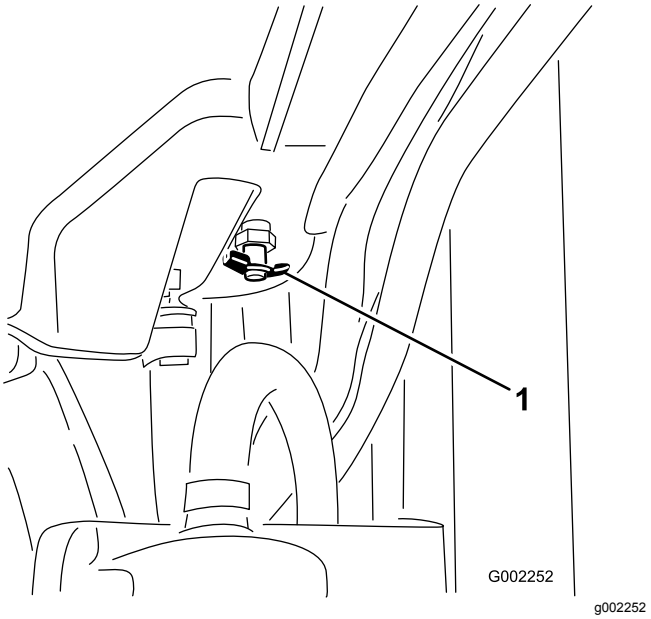


**Figure 86**

1. Drain valve

5. Close the drain valve (Figure 87).
6. Remove the radiator cap (Figure 86).
7. Slowly fill the radiator with coolant to approximately 2.5 cm (1 inch) below the sealing surface of the cap.

   **Note:** Use enough coolant to fill the engine and the system lines. This allows the coolant to expand without it overflowing while the engine is warming up.
8. Start the engine with the cap loosely on the radiator (Figure 83).
9. Allow the engine to warm up until the thermostat opens.

   **Note:** This usually occurs between 79°C and 88°C (175°F and 190°F).
10. Once the coolant has warmed up, top off the coolant level to the sealing surface of the cap and tighten the cap (Figure 86).
11. Open the expansion-tank cap and fill the tank with coolant to the Cold level (Figure 86).
12. Check the coolant levels after several engine startup and shut-down cycles.

    **Note:** Add coolant to the radiator and expansion tank as needed.

# *Brake Maintenance*

## Adjusting the Brakes

If the brake pedal travels more than 2.5 cm (1 inch) before you feel resistance, adjust the brakes as follows:

1. Position the sprayer on a level surface, stop the pump, shut off the engine, and remove the key from the starter switch.
2. Set the parking brake.
3. Put the blocks under the wheels to prevent the machine from rolling.
4. Release the parking brake.
5. Loosen the front nuts on the brake cables under the front end of the sprayer (Figure 87).

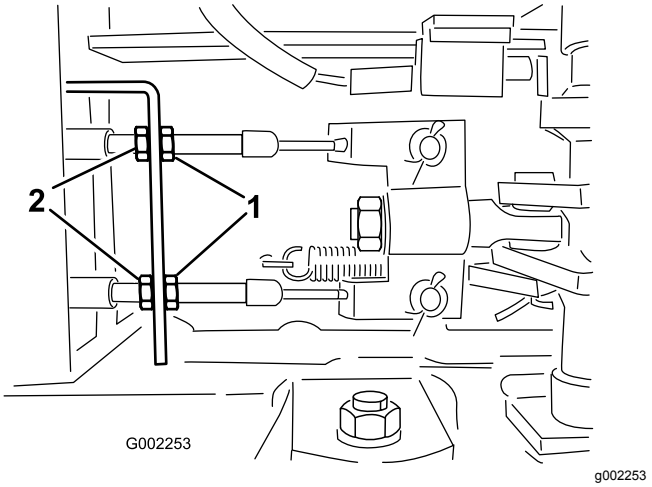


**Figure 87**

1. Front nuts
2. Rear nuts

6. Tighten the rear nuts equally until the brake pedal moves 1 to 2 cm (1/2 to 1 inch) before you feel resistance (Figure 87).

   ***Important:*** **Ensure that you tighten both rear nuts equally so that the threaded ends of the brake cables, in front of the front nuts, are the same length.**
7. Tighten the front nuts.

# Belt Maintenance

## Servicing the Alternator Belt

**Service Interval:** After the first 8 hours

Every 100 hours

Check the condition and tension of the alternator/cooling fan belt. Replace the belt as necessary.

1. Position the sprayer on a level surface, set the parking brake, stop the pump, shut off the engine, and remove the key from the starter switch.
2. Check the tension by depressing the belt midway between the alternator and the crankshaft pulleys with 10 kg (22 lb) of force.

   **Note:** The belt should deflect 10 to 12 mm (0.39 to 0.47 inches). If the deflection is not correct, go to step 3. If it is correct, you may skip the remainder of this procedure and resume operating the sprayer.
3. Loosen the bolts that secure the brace to the engine and the bolt that secures the alternator to the brace (Figure 88).

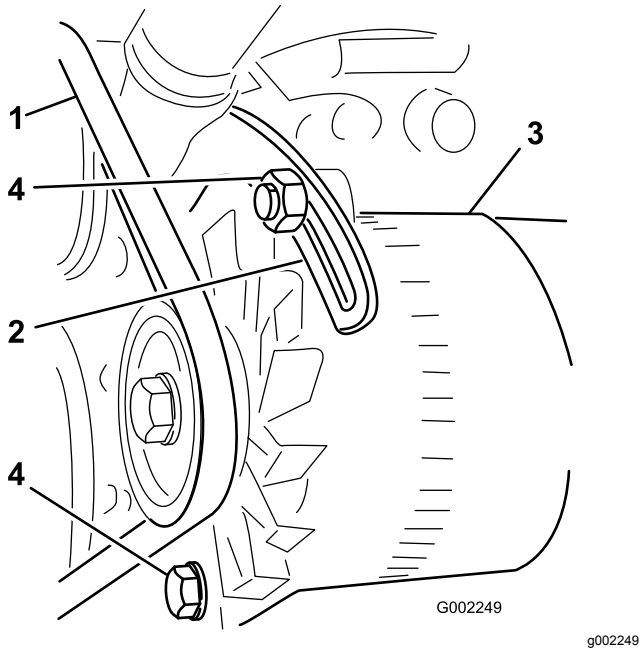


g002249

**Figure 88**

1. Alternator belt
2. Brace
3. Alternator
4. Bolts

4. Insert a pry bar between the alternator and the engine and carefully pry on the alternator outward.
5. When you achieve the proper tension, tighten the alternator and the bolts to secure the adjustment.
6. Tighten the locknut to secure the adjustment.

# *Hydraulic System Maintenance*

## Hydraulic Fluid Specification

**Hydraulic fluid specifications:**

Toro Premium All Season Hydraulic Fluid

**Note:** Available in 19 L (5 US gallon) pails or 208 L (55 US gallon) drums. See the *Parts Catalog* or your Toro Distributor for part numbers.

Alternate hydraulic fluids: If the Toro fluid is not available, other fluids may be used provided they meet all the following material properties and industry specifications. We do not recommend the use of synthetic fluid. Consult with your lubricant distributor to identify a satisfactory product.

**Note:** Toro will not assume responsibility for damage caused by improper substitutions, so use only products from reputable manufacturers who will stand behind their recommendation.

**High Viscosity Index/Low Pour Point Anti-wear Hydraulic Fluid, ISO VG 46**

Material Properties:

| | |
|---|---|
| Viscosity, ASTM D445 | cSt @ 40°C 44 to 48<br>cSt @ 100°C 7.9 to 8.5 |
| Viscosity Index ASTM D2270 | 140 to 160 |
| Pour Point, ASTM D97 | -34°F to -49°F |

Industry Specifications:

Vickers I-286-S (Quality Level), Vickers M-2950-S (Quality Level), Denison HF-0

***Important:*** **The ISO VG 46 Multigrade fluid has been found to offer optimal performance in a wide range of temperature conditions. For operation in consistently high ambient temperatures, 18°C (65°F) to 49°C (120°F), ISO VG 68 hydraulic fluid may offer improved performance.**

**Premium Biodegradable Hydraulic Fluid-Mobil EAL EnviroSyn 46H**

***Important:*** **Mobil EAL EnviroSyn 46H is the only synthetic biodegradable fluid approved by Toro. This fluid is compatible with the elastomers used in Toro hydraulic systems and is suitable for a wide-range of temperature conditions. This fluid is compatible with conventional mineral oils, but for maximum biodegradability and performance the hydraulic system should be thoroughly flushed of conventional fluid. The oil is available in 19 L (5 US gallon) pails or 208 L (55 US gallon) drums from your Mobil Distributor.**

## Checking the Hydraulic Fluid

**Service Interval:** Before each use or daily

1. Position the sprayer on a level surface, set the parking brake, stop the sprayer pump, shut off the engine, and remove the key from the starter switch.
2. Clean the area around the hydraulic-fluid-tank dipstick cap and remove it (Figure 89).

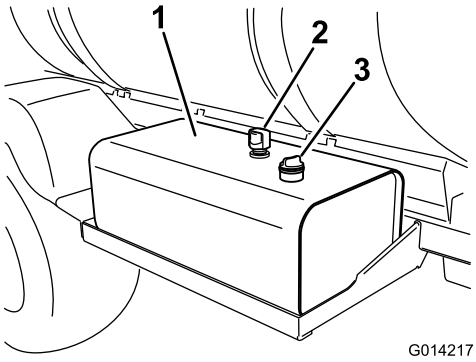


g014217

**Figure 89**

1. Hydraulic-fluid tank
2. Vent
3. Dipstick cap

***Important:*** **Be very careful not to get dirt or other contaminants into the opening when checking the oil.**

3. Wipe the dipstick clean with a cloth, install the dipstick into the tank, and pull it out again.

   **Note:** The fluid level should be within the safe-operating range on the dipstick (Figure 90).

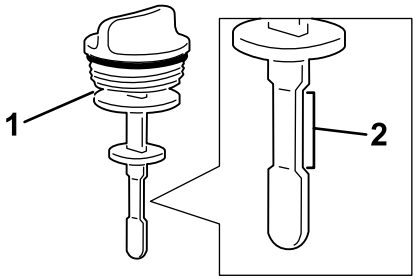


g014218

**Figure 90**

1. Dipstick
2. Safe-operating range

4. If the fluid is low, fill the tank with the specified hydraulic fluid or equivalent to raise the level to the upper mark; refer to Hydraulic Fluid Specification (page 69).
5. Install the dipstick cap into the tank and secure.

# Servicing the Hydraulic Fluid

If the oil becomes contaminated, contact your Toro Distributor to have the system flushed.

**Note:** Contaminated fluid looks milky or black when compared to clean fluid.

## Replacing the Hydraulic-Fluid Filters

**Service Interval:** After the first 5 hours

Every 400 hours/Yearly (whichever comes first)

Use the Toro replacement filter. See your *Parts Manual* for the correct part number.

***Important:*** **Use of any other filter may void the warranty on some components.**

**⚠ WARNING**

**Hot hydraulic fluid can cause severe burns.**

**Allow the hydraulic fluid to cool before performing any maintenance to the hydraulic system.**

1. Position the sprayer on a level surface, set the parking brake, stop the pump, shut off the engine, and remove the key from the starter switch.
2. Locate the 2 hydraulic filters on the machine (Figure 91 and Figure 92).

   **Note:** One is below the hydraulic-fluid tank and the other is at the rear of the machine on the frame.

   - Forward filter—below the hydraulic tank.

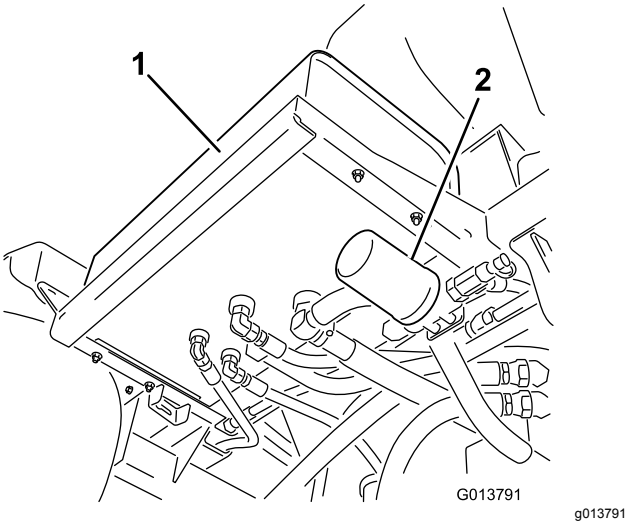


**Figure 91**

1. Hydraulic tank
2. Forward filter

- Rear filter—located on the machine frame.

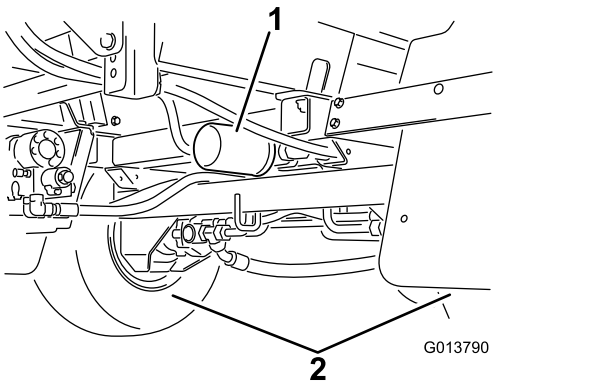


**Figure 92**

1. Rear filter
2. Rear wheels

3. Clean the area around the filter-mounting area.
4. Place a drain pan under the filter.
5. Remove the filter.
6. Lubricate the new filter gasket.
7. Ensure that the filter-mounting area is clean.
8. Screw the filter on until the gasket contacts the mounting plate, then tighten the filter 1/2 turn.
9. Start the engine and let it run for about 2 minutes to purge air from the system.
10. Shut off the engine, check the hydraulic-fluid level, and check for leaks.
11. Dispose of the used filter at a certified recycling center.

# Changing the Hydraulic Fluid

**Service Interval:** Every 400 hours/Yearly (whichever comes first)

**Hydraulic fluid capacity:** 56 L (15 US gallons) of the specified hydraulic fluid or equivalent; refer to Hydraulic Fluid Specification (page 69).

***Important:*** **Using any other fluid may void the warranty on some components.**

**⚠ WARNING**

**Hot hydraulic fluid can cause severe burns.**

**Allow the hydraulic fluid to cool before performing any maintenance to the hydraulic system.**

1. Replace the hydraulic-fluid filter; refer to Replacing the Hydraulic-Fluid Filters (page 70).
2. Clean the area around a hydraulic-hose fitting on the bottom of the hydraulic-fluid tank (Figure 93).

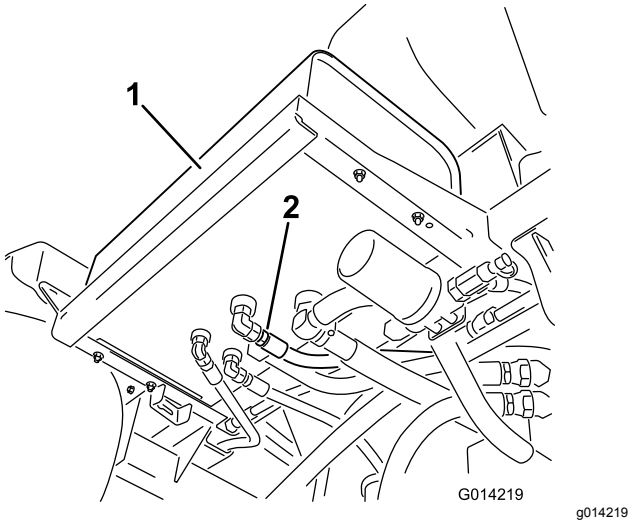


**Figure 93**

1. Hydraulic tank
2. Hydraulic hose and fitting

3. Place a large pan under the fitting.
4. Remove the hose fitting from the tank, allowing the fluid to drain into the pan (Figure 93).
5. Install the hose and fitting to the tank and tighten it securely.
6. Fill the hydraulic reservoir with approximately 53 L (14 US gallons) of specified hydraulic fluid or equivalent; refer to Hydraulic Fluid Specification (page 69).
7. Start the machine and run it at IDLE for 3 to 5 minutes to circulate the fluid and remove any air trapped in the system.
8. Shut off the engine, check the hydraulic-fluid level, and check for leaks.
9. Dispose of the used hydraulic fluid at a certified recycling center.

# Checking the Hydraulic Lines and Hoses

Inspect the hydraulic lines and hoses daily for leaks, kinked lines, loose mounting supports, wear, loose fittings, weather deterioration, and chemical deterioration. Make all necessary repairs before operating the machine.

**⚠ WARNING**

**Hydraulic fluid escaping under pressure can penetrate skin and cause injury.**

- **Ensure that all hydraulic-fluid hoses and lines are in good condition and all hydraulic connections and fittings are tight before applying pressure to the hydraulic system.**
- **Keep your body and hands away from pin-hole leaks or nozzles that eject high-pressure hydraulic fluid.**
- **Use cardboard or paper to find hydraulic leaks.**
- **Safely relieve all pressure in the hydraulic system before performing any work on the hydraulic system.**
- **Get immediate medical help if fluid is injected into the skin.**

# *Sprayer System Maintenance*

**⚠ WARNING**

**Chemical substances used in the spray system may be hazardous and toxic to you, bystanders, animals, plants, soils or other property.**

- **Carefully read and follow the chemical warning labels and material safety data sheets (MSDS) for all chemicals used and protect yourself according to the chemical manufacturer's recommendations. For example, use appropriate personal protective equipment (PPE) including face and eye protection, gloves, or other equipment to guard against personal contact with the chemical.**
- **Keep in mind that there may be more than 1 chemical used and information on each should be assessed.**
- **Refuse to operate or work on the sprayer if this information is not available.**
- **Before working on a spray system make sure that the system has been triple rinsed and neutralized according to the recommendations of the chemical manufacturer(s) and all the valves have been cycled 3 times.**
- **Verify there is an adequate supply of clean water and soap nearby, and immediately wash off any chemicals that contact you.**

# Inspecting the Hoses

**Service Interval:** Every 200 hours—Inspect all hoses and connections for damage and proper attachment.

Every 400 hours/Yearly (whichever comes first)—Inspect the O-rings in the valve assemblies and replace them if necessary.

Examine each hose in the spray system for cracks, leaks or other damage. At the same time, inspect the connections and fittings for similar damage. Replace any hoses and fittings if damaged.

# Changing the Pressure Filter Screen

**Service Interval:** Every 400 hours

**Note:** Optional pressure filter screens are available through your authorized Toro parts distributor.

1. Move the machine to a level surface, shut off the sprayer pump, shut off the engine, and remove the key from the starter switch.
2. Align a drain pan under the pressure filter (Figure 94).

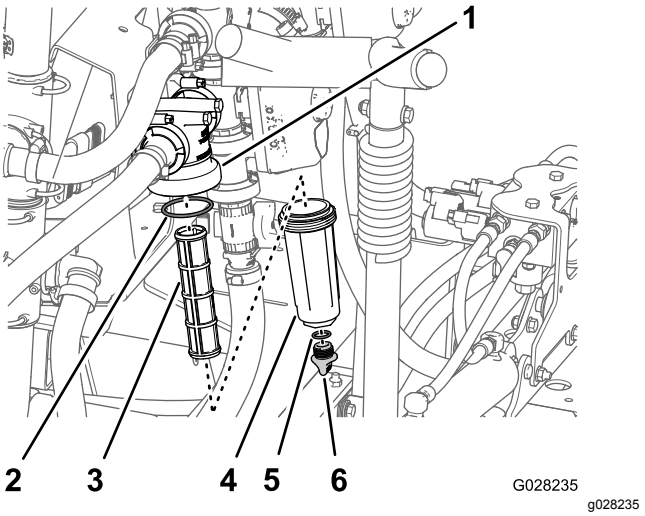


**Figure 94**

1. Filter head
2. O-ring (bowl)
3. Filter element
4. Bowl
5. O-ring (drain plug)
6. Drain plug

3. Rotate the drain plug counterclockwise and remove it from the bowl of the pressure filter (Figure 94).

   **Note:** Allow the bowl to drain completely.
4. Rotate the bowl counterclockwise and remove it from its filter head (Figure 94).
5. Remove the old pressure-filter element (Figure 94).

   **Note:** Discard the old filter.
6. Check the O-ring for the drain plug (located inside the bowl) and the O-ring for the bowl (located inside the filter head) for damage and wear (Figure 94).

   **Note:** Replace any damaged or worn O-rings for the plug, bowl, or both.
7. Install the new pressure-filter element into the filter head (Figure 94).

   **Note:** Ensure that the filter element is firmly seated into the filter head.

8. Install the bowl onto the filter head and tighten the bowl by hand (Figure 94).
9. Install the plug into the bowl and tighten the plug by hand (Figure 94).

# Spray System Schematic

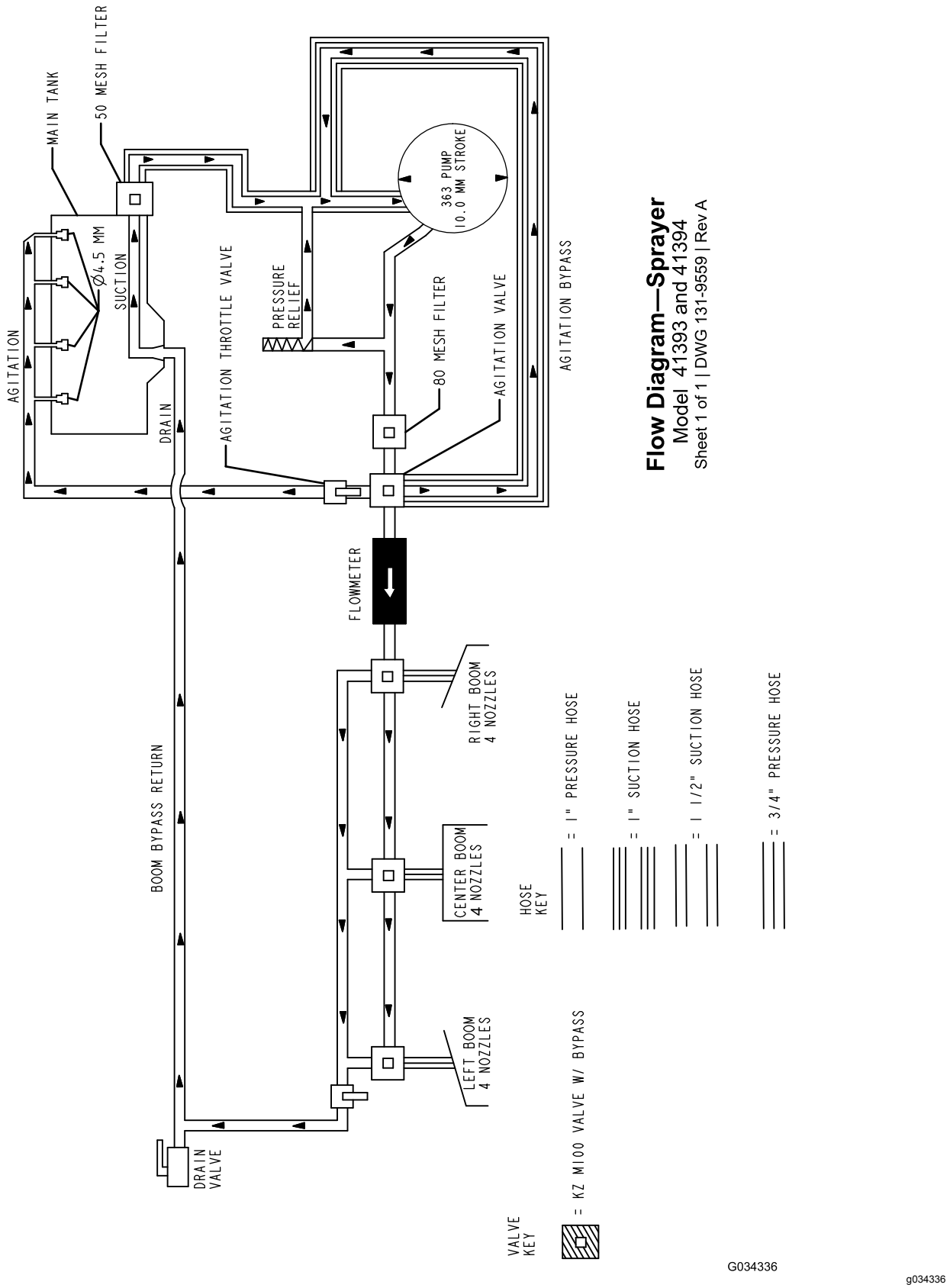


**Figure 95**

# Pump Maintenance

## Inspecting the Pump

**Service Interval:** Every 400 hours/Yearly (whichever comes first)—Inspect the pump diaphragm and replace if necessary (see an Authorized Toro Service Distributor).

Every 400 hours/Yearly (whichever comes first)—Inspect the pump check valves and replace if necessary (see an Authorized Toro Service Distributor).

**Note:** The following machine components are considered parts subject to consumption through use unless found defective and are not covered by the warranty associated with this machine.

Have an Authorized Toro Service Distributor check following internal-pump components for damage:

- Pump diaphragm
- Pump check-valve assemblies

Replace any components if necessary.

# Adjusting the Actuators

You can use the following procedure to adjust the length of the actuator rods.

1. Extend the booms to the SPRAY position.
2. Remove the cotter pin from the pivot pin (Figure 96).

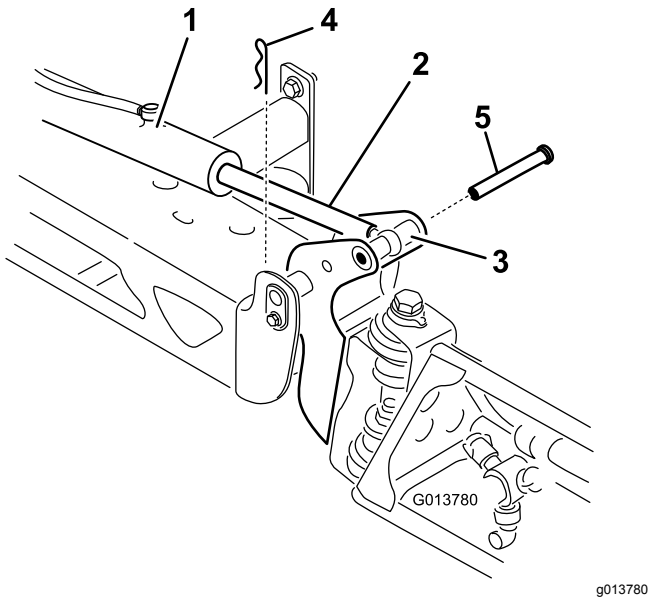


**Figure 96**

1. Actuator
2. Actuator rod
3. Boom-pivot-pin housing
4. Cotter
5. Pin

3. Lift up on the boom, remove the pin (Figure 96), and slowly lower the boom to the ground.
4. Inspect the pin for any damage and replace if necessary.
5. Use a wrench on the flat sides of the actuator rod to immobilize it, then loosen the jam nut to manipulate the eyelet rod (Figure 97).

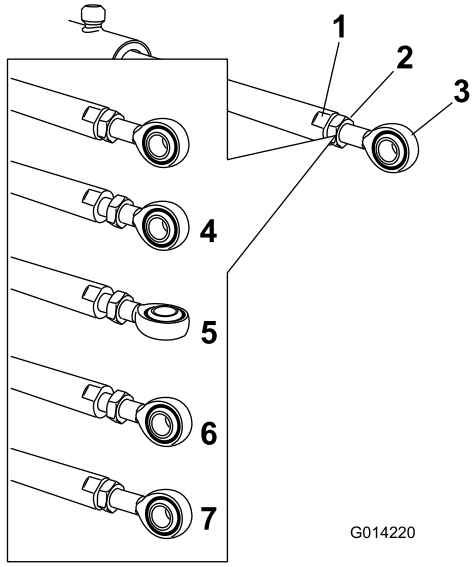


**Figure 97**

1. Flat side on the actuator rod
2. Jam nut
3. Eyelet
4. Jam nut (loosened)
5. Eyelet (adjusted)
6. Eyelet position for reassembly
7. Jam nut tightened to lock new position

6. Turn the eyelet rod in the actuator rod to shorten or lengthen the extended actuator to the desired position (Figure 97).

   **Note:** Turn the eyelet rod in half or complete revolutions to allow the reassembly of the rod to the boom.
7. With the eyelet rod in the desired position, tighten the jam nut to secure the actuator and eyelet rod.
8. Raise the boom to align the pivot with the actuator rod.
9. While holding the boom, insert the pin through both boom pivot and actuator rod (Figure 96).
10. With the pin in place, release the boom and secure the pin with the cotter removed previously.
11. Repeat the procedure for each actuator-rod bearing if necessary.

# Inspecting the Nylon Pivot Bushings

**Service Interval:** Every 400 hours/Yearly (whichever comes first)

1. Position the sprayer on a level surface, set the parking brake, stop the pump, shut off the engine, and remove the key from the starter switch.
2. Extend the booms to the SPRAY position and support the booms using stands or straps from a lift.
3. With the weight of the boom supported, remove the bolt and nut securing the pivot pin to the boom assembly (Figure 98).

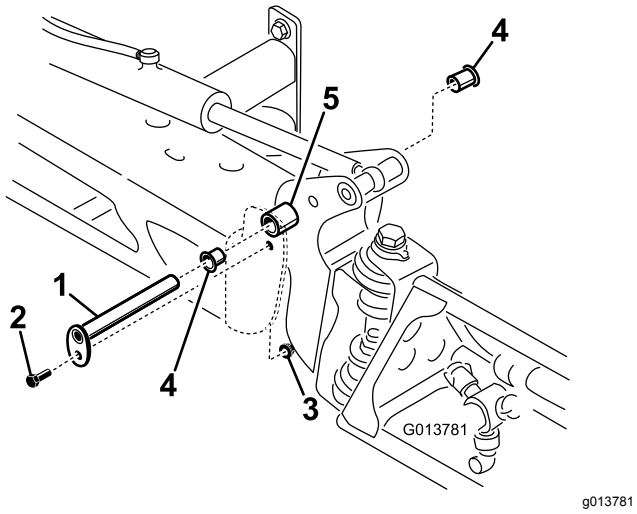


**Figure 98**

1. Pivot pin
2. Bolt
3. Nut
4. Nylon bushing
5. Pivot bracket

4. Remove the pivot pin (Figure 98).
5. Remove the boom and pivot-bracket assembly from the center frame to access the nylon bushings.
6. Remove and inspect the nylon bushings from the front and back sides of the pivot bracket (Figure 98).

   **Note:** Replace any damaged bushings.
7. Place a small amount of oil on the nylon bushings and install them into pivot bracket.
8. Install the boom and pivot-bracket assembly into the center frame, aligning the openings (Figure 98).
9. Install the pivot pin and secure it with the bolt and nut removed previously.
10. Repeat this procedure for each boom.

# *Software Maintenance*

# Programming the Machine Settings

Should an operator or maintenance personnel unintentionally configure the machine for the GeoLink option, the sprayer system will not operate correctly. Use the following procedure to set the software for the machine to the standard Multi Pro configuration.

1. Insert the key into the key switch and rotate the switch to the ON position.

   **Note:** If the GeoLink splash screen displays (Figure 99), you need to set the software for the machine to the standard Multi Pro configuration. Do not start the engine.




**Figure 99**

1. Button 5

2. At the splash screen, press and hold the button 5 (far right) on the InfoCenter to access the Main Menu screen (Figure 104).
3. On the Main Menu, press button 1 or button 2 until the Settings option is highlighted, and press button 4 to navigate to the Settings menus (Figure 100).

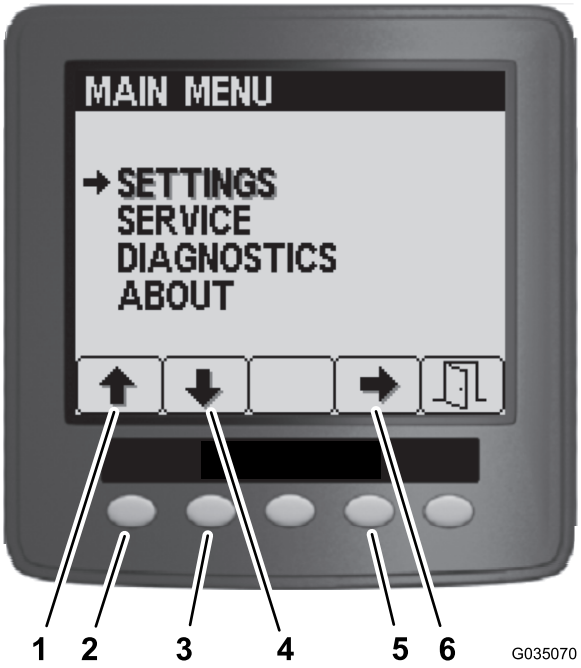


**Figure 100**

1. Up arrow
2. Button 1
3. Down arrow
4. Button 2
5. Button 4
6. Select arrow

4. On the Settings menu, press button 1 or button 2 until the GeoLink option is highlighted, and press button 4 to navigate to the GeoLink menu (Figure 101).

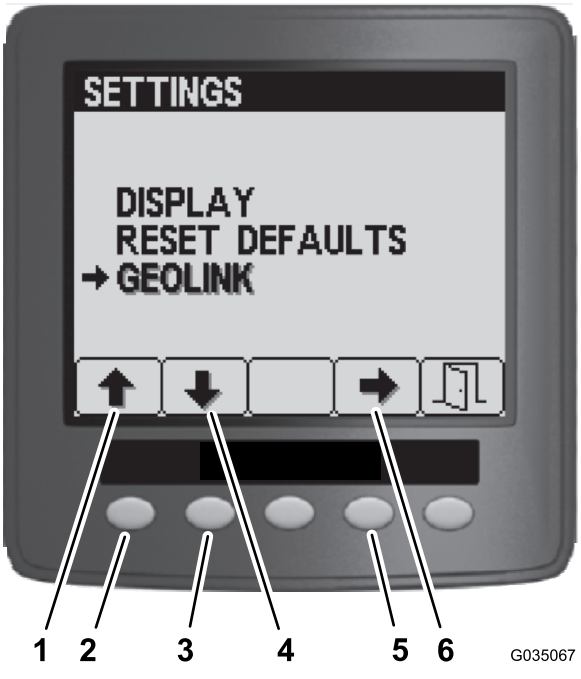


**Figure 101**

1. Up arrow
2. Button 1
3. Down arrow
4. Button 2
5. Button 4
6. Select arrow

5. On the GeoLink menu. press button press button 4 to select the No option, and press the button 5 to save your settings and exit the menu (Figure 102).




**Figure 102**

1. Button 4
2. Select arrow
3. Button 5
4. Exit

6. Rotate the key switch to the OFF position (Figure 103).




**Figure 103**

7. Rotate the key switch to the ON position (Figure 103).

**Note:** The splash screen for the Multi Pro 5800 sprayer should display in the InfoCenter.




G035267

g035267

**Figure 104**

8. Rotate the key switch to the OFF position.

# Cleaning

## Cleaning the Radiator-Cooling Fins

**Service Interval:** Every 200 hours

***Important:*** **Do not spray water into a hot engine compartment, as it may damage the engine.**

1. Position the sprayer on a level surface, set the parking brake, stop the pump, shut off the engine, and remove the key from the starter switch.
2. Tilt the driver and passenger seats forward and align the prop rod into the detent in the prop-rod-guide slot.
3. Allow the cooling system to cool.
4. Remove the seat-base-access panel; refer to Removing the Seat-Base-Access Panel (page 51).
5. Using a soft brush and low-pressure compressed air, clean the fins of the radiator.

   **Note:** Clean the radiator fins more often if needed. Check all coolant hoses and replace any that are worn, leaking, or damaged.
6. Lower the driver and passenger seats.
7. Install the seat-base-access panel; refer to Installing the Seat-Base-Access Panel (page 51).

## Cleaning the Agitation and Section Valves

- To clean the agitation valve refer to the following sections:
  1. Removing the Valve Actuator (page 79)
  2. Removing the Agitation-Manifold Valve (page 79)
  3. Cleaning the Manifold Valve (page 81)
  4. Assembling the Manifold Valve (page 82)
  5. Installing the Agitation-Manifold Valve (page 83)
  6. Installing the Valve Actuator (page 84)
- To clean the 3 section valves refer to the following sections:
  1. Removing the Valve Actuator (page 79)
  2. Removing the Section-Manifold Valve (page 80)
  3. Cleaning the Manifold Valve (page 81)
  4. Assembling the Manifold Valve (page 82)

5. Installing the Section-Manifold Valve (page 83)
6. Installing the Valve Actuator (page 84)

# Removing the Valve Actuator

1. Move the machine to a level surface, set the parking brake, stop the pump, shut off the engine, and remove the key from the ignition switch.
2. Remove the retainer that secures the actuator to the manifold valve for the section valve or agitation valve (Figure 105).

   **Note:** Squeeze the 2 legs of the retainer together while pushing it down.

   **Note:** Retain the actuator and retainer for installation in Installing the Valve Actuator (page 84).

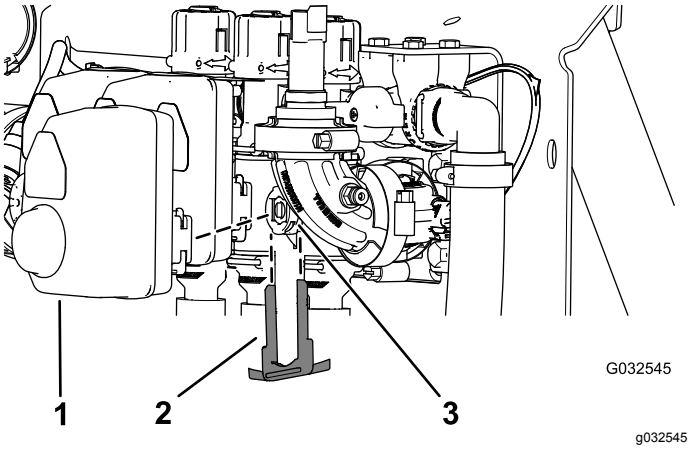


**Figure 105**

Section-Valve Actuator Shown (the agitation valve actuator is similar)

1. Actuator (section valve)
2. Retainer
3. Stem port

3. Remove the actuator from the manifold valve.

# Removing the Agitation-Manifold Valve

1. Remove the clamps and gaskets that secure the manifold for the agitation valve to the agitation-bypass valve, pressure-filter head, reducer coupling, and adapter fitting (agitation throttle valve) as shown in Figure 106.

   **Note:** Retain the clamps, gaskets, quick connect, and quick-connect pin for installation in Installing the Agitation-Manifold Valve (page 83).

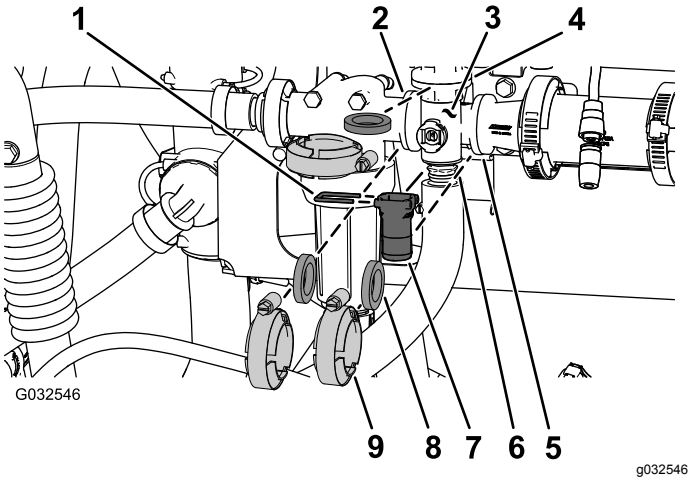


**Figure 106**
Agitation Valve

1. Quick-connect pin
2. Flange (pressure-filter head)
3. Manifold (agitation valve)
4. Flange (agitation-bypass valve)
5. Flange (reducer coupling)
6. Flange (adapter fitting—agitation-throttle valve)
7. Quick connect
8. Gasket
9. Flange clamp

2. Remove the agitation-valve manifold from the machine (Figure 107).

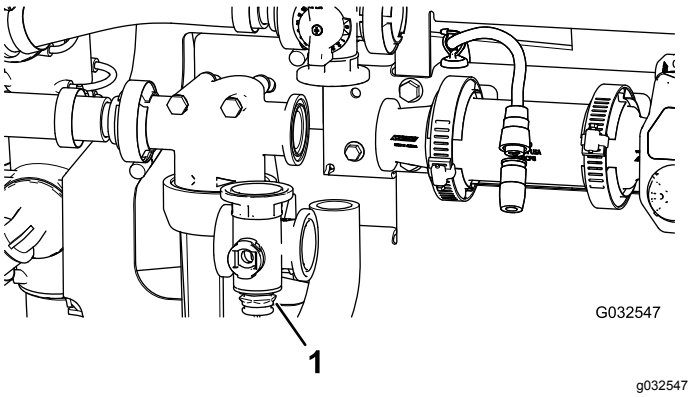


**Figure 107**

1. Agitation-valve manifold

# Removing the Section-Manifold Valve

1. Remove clamps and gaskets that secure the manifold for the section valve (Figure 108) to the adjacent section valve (if left, section valve and reducer coupling).

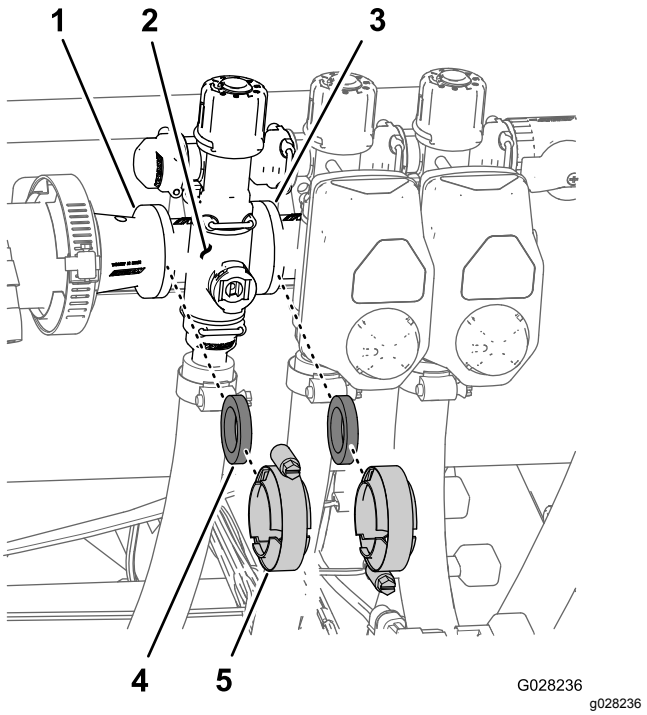


**Figure 108**

1. Flange (reducer coupling)
2. Manifold (section valve)
3. Flange (adjacent section valve)
4. Gasket
5. Flange clamp

2. Remove the retainer that secures the section-valve manifold to the bypass fitting (Figure 109).

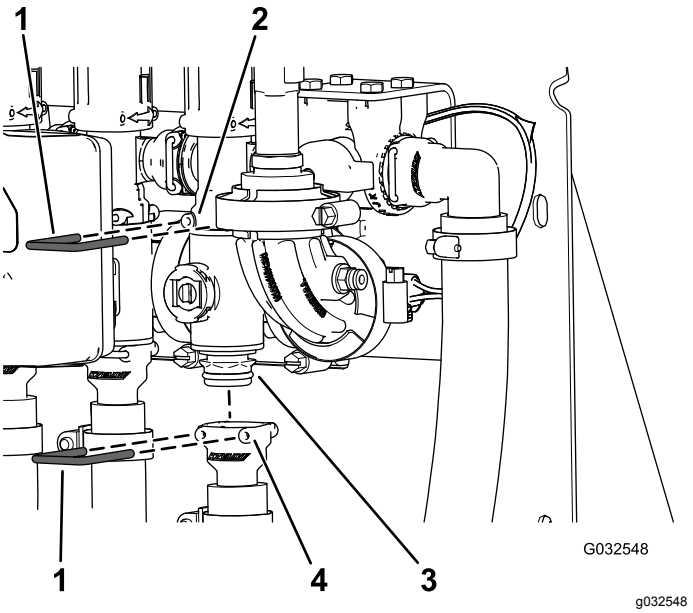


**Figure 109**

1. Retainer
2. Socket (bypass fitting)
3. Manifold-valve assembly
4. Socket (outlet fitting)

3. Remove the section-valve manifold from the machine (Figure 110).

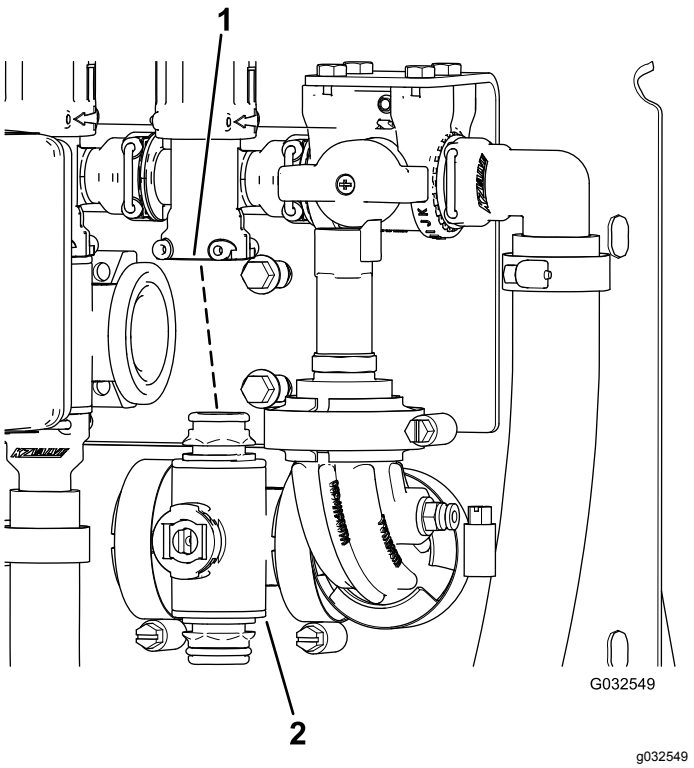


**Figure 110**

1. Bypass fitting
2. Section-valve manifold

## Cleaning the Manifold Valve

1. Position the valve stem so that it is in the closed position (Figure 111 B).

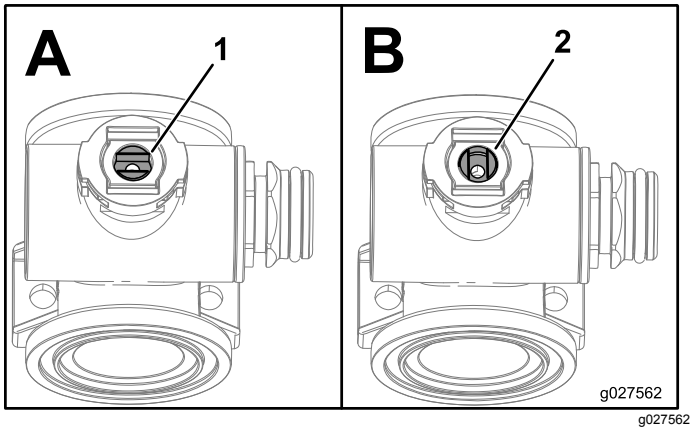


**Figure 111**

1. Valve open
2. Valve closed

2. Remove the 2 end-cap-fitting assemblies from each end of the manifold body (Figure 112 and Figure 113).

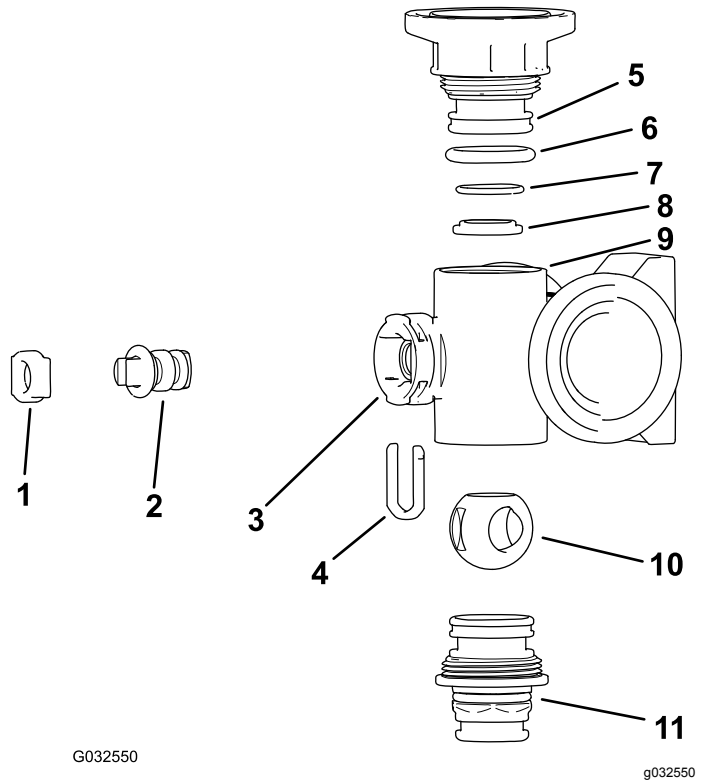


**Figure 112**
Agitation Valve Manifold

1. Stem retainer
2. Valve stem
3. Stem port
4. Stem retainer
5. Endcap fitting
6. Endcap-seal O-ring (0.796 inch/0.139 inch)
7. Back seating O-ring (0.676 inch/0.07 inch)
8. Valve-seat ring
9. Mainfold body
10. Ball valve
11. Quick connect

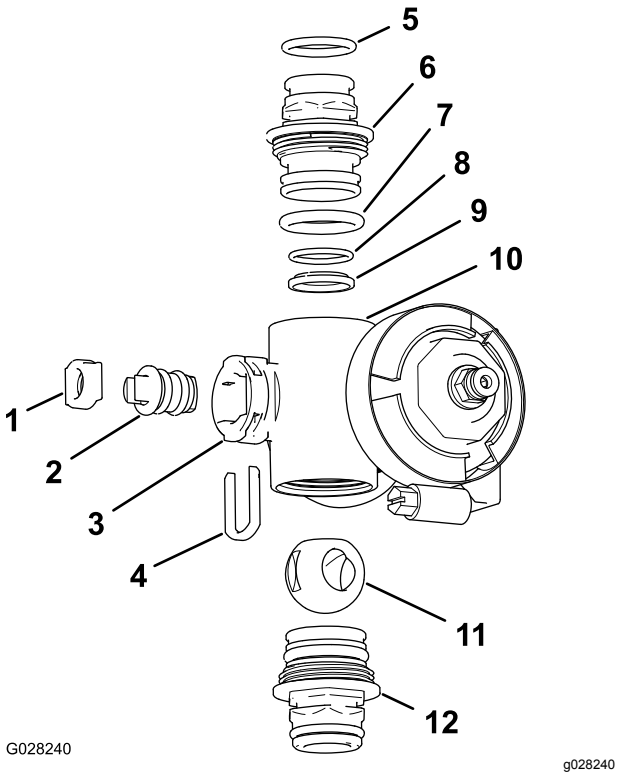


**Figure 113**
Section-Valve Manifold

| | | | |
|---|---|---|---|
| 1. | Valve-stem seat | 7. | End cap O-ring (0.796 inch/0.139 inch) |
| 2. | Valve-stem assembly | 8. | Back seating O-ring (0.676 inch/0.07 inch) |
| 3. | Stem port | 9. | Ball seat |
| 4. | Stem retainer | 10. | Mainfold body |
| 5. | Outlet fitting O-ring (0.737 inch/0.103 inch) | 11. | Ball valve |
| 6. | End-cap fitting | 12. | End-cap-fitting assembly |

3. Turn the valve stem so that the ball is in the OPEN position (Figure 111 A).

   **Note:** The valve stem should be parallel with the valve flow and the ball should slide out.

4. Remove the stem retainer from the slots in the stem port in the manifold (Figure 112 and Figure 113).
5. Remove the stem retainer and valve-stem seat from the manifold (Figure 112 and Figure 113).
6. Reach into the manifold body and remove the valve-stem assembly (Figure 112 and Figure 113).
7. Clean the inside of the manifold and exterior of the ball valve, valve-stem assembly, stem capture, and end fittings.

# Assembling the Manifold Valve

1. Check the condition of the outlet fitting O-rings (section-valve manifold only), end cap O-rings, back seating O-rings, and ball seat for damage or wear (Figure 112 and Figure 113).

   **Note:** Replace any damaged or worn O-rings or seats.

2. Apply grease to the valve stem and insert it into the valve-stem seat (Figure 112 and Figure 113).
3. Install the valve stem and seat into the manifold and secure the stem and seat with the stem retainer (Figure 112 and Figure 113).
4. Ensure that the back seating O-ring and the ball seat are aligned and seated into the end-cap fitting (Figure 112 and Figure 113).
5. Install the end-cap-fitting assembly onto the manifold body until the flange of the end-cap fitting touches the manifold body (Figure 112 and Figure 113), then turn the end-cap fitting an additional 1/8 to 1/4 turn.

   **Note:** Use caution to prevent damage to the end of the fitting.

6. Insert the ball into the valve body (Figure 114).

   **Note:** The valve stem should fit inside the ball-drive slot. If the valve stem does not fit, adjust the position of the ball (Figure 114).

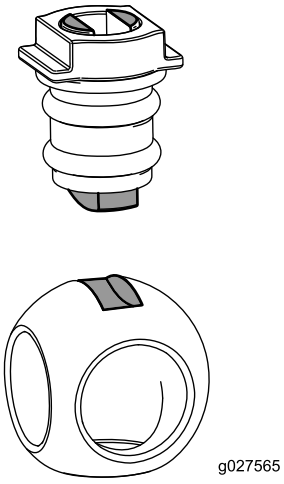


**Figure 114**

7. Turn the valve-stem assembly so that the valve is closed (Figure 111).
8. Repeat steps 4 and 5 for the other end-cap-fitting assembly.

# Installing the Agitation-Manifold Valve

1. Align the flange of the agitation-bypass valve, 1 gasket, and the end-cap-fitting flange of the agitation-valve manifold (Figure 115 A).

   **Note:** If needed, loosen the mounting hardware for the pressure-filter head as needed to provide clearance.

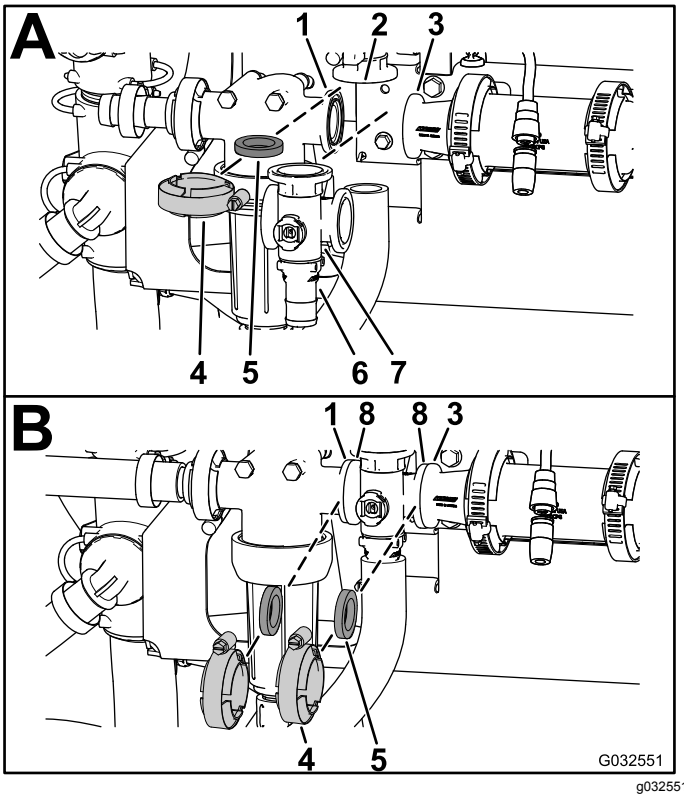


**Figure 115**

| | |
|---|---|
| 1. Flange (pressure-filter head) | 5. Gasket |
| 2. Flange (agitation-bypass valve) | 6. Quick connect |
| 3. Flange (reducer coupling) | 7. Manifold (agitation valve) |
| 4. Flange clamp | 8. Flange (manifold—agitation valve) |

2. Assemble the agitation-bypass valve, gasket, and agitation-valve manifold with a clamp tightened hand-tight (Figure 115 A).
3. Align a gasket between the flanges of the pressure-filter head and the agitation-valve manifold (Figure 115 B).
4. Assemble the pressure-filter head, gasket, and agitation-valve manifold with a clamp tightened hand-tight (Figure 115 B).
5. Align a gasket between the flanges of the agitation-valve manifold and the reducer coupling (Figure 115 B).
6. Assemble the agitation-valve manifold, gasket, and reducer coupling with a clamp tightened hand-tight (Figure 115 B).
7. Align a gasket between the flanges of the agitation-valve manifold and the adapter fitting for the agitation-throttle valve (Figure 115 C).
8. Assemble the agitation-valve manifold, gasket, and adapter fitting with a clamp tightened hand-tight (Figure 115 C).
9. If you loosened the mounting hardware for the pressure-filter head, tighten the nut and bolt to 1978 to 2542 N·cm (175 to 225 in-lb).

# Installing the Section-Manifold Valve

1. Insert the upper end-cap fitting of the manifold valve into the bypass fitting (Figure 116 A).

   **Note:** If needed, loosen the mounting hardware for the bypass valve as needed to provide clearance.

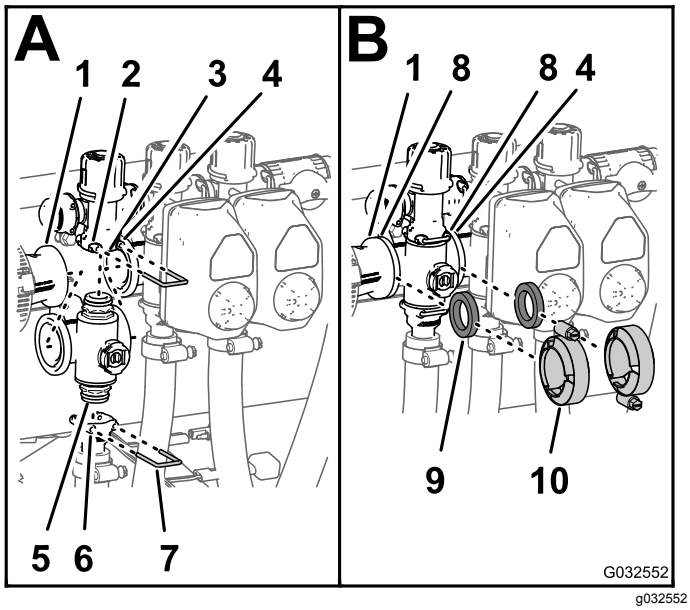


**Figure 116**

| | |
|---|---|
| 1. Flange (reducer coupling) | 6. Socket (outlet fitting) |
| 2. Socket (bypass fitting) | 7. Retainer |
| 3. Bypass valve | 8. Flange (manifold—section valve) |
| 4. Flange (adjacent manifold—agitation valve) | 9. Gasket |
| 5. End-cap fitting (manifold-valve assembly) | 10. Flange clamp |

2. Secure the end-cap fitting to the bypass fitting by inserting a retainer into the socket of the bypass fitting (Figure 116 A).

3. Assemble the outlet fitting onto the lower end-cap fitting of the manifold valve (Figure 116 A).
4. Secure the end-cap fitting to the outlet fitting by inserting a retainer into the socket of the outlet fitting (Figure 116 A)
5. Align a gasket between the flanges of the reducer coupling and the section-valve manifold (Figure 116 B).
6. Assemble the reducer coupling, gasket, and section-valve manifold with a clamp tightened hand-tight (Figure 116 B).
7. If installing the 2 left most section valves, align a gasket between the flanges of the 2 adjacent section-valve manifolds (Figure 116 B).
8. Assemble the and 2 adjacent section-valve manifolds and gasket with a clamp and tighten the clamp by hand (Figure 116 B).
9. If you loosened the mounting hardware for the bypass valve, tighten the nut and bolt to 1017 to 1243 N·cm (90 to 110 in-lb).

## Installing the Valve Actuator

1. Align the actuator to the manifold valve.
2. Secure the actuator and valve with the retainer that you removed in step 2 of Removing the Valve Actuator (page 79).

# Storage

1. Position the sprayer on a level surface, set the parking brake, stop the pump, shut off the engine, and remove the key from the starter switch.
2. Clean dirt and grime from the entire machine, including the outside of the engine.

   ***Important:*** **You can wash the machine with mild detergent and water. Do not use high-pressure water to wash the machine. Pressure washing may damage the electrical system or wash away necessary grease at friction points. Avoid excessive use of water, especially near the control panel, lights, engine, and battery.**
3. Condition the sprayer system as follows:
   A. Drain the fresh-water tank.
   B. Drain the spray system as completely as possible.
   C. Prepare rust inhibiting, non-alcohol based, RV antifreeze solution per the manufacturer's instructions.
   D. Add the RV antifreeze solution to the fresh-water tank and sprayer tank.
   E. Run the sprayer pump for a few minutes to circulate the RV antifreeze throughout the spray system and any installed spray accessories.
   F. Turn the master boom and boom sections on and spray out the nozzles until the RV antifreeze is visible then turn the master boom off.
   G. Drain the fresh-water tank and spray system as completely as possible.
4. Use the boom-lift switches to raise the booms. Raise the booms until they have moved completely into boom-transport cradle forming the ‘X’ transport position and the boom cylinders are fully retracted.

   **Note:** Make sure that the boom cylinders are fully retracted to prevent actuator-rod damage.
5. Perform the following maintenance steps for short-term or long-term storage
   - **Short-term storage** (less than 30 days), clean the sprayer system; refer to Cleaning the Agitation and Section Valves (page 78).
   - **Long-term storage** (longer then 30 days), perform the following:
     A. Clean the agitation valve and the 3 section valves; refer to Cleaning the Agitation and Section Valves (page 78).

B. Check the brakes; refer to Checking the Brakes (page 24).

C. Service the air cleaner; refer to Checking the Air Cleaner (page 54).

D. Grease the sprayer; refer to Greasing the Sprayer (page 52).

E. Change the engine-oil filter and oil; refer to Changing the Engine-Oil Filter (page 57) and Changing the Engine Oil (page 57).

F. Check the tire pressure; refer to Checking the Tire Pressure (page 24).

G. Prepare the fuel system as follows:

   i. Start the engine and run it at idle speed for approximately 2 minutes.

   ii. Shut off the engine.

   iii. Flush the fuel tank with fresh, clean fuel.

   iv. Secure the fuel-system fittings.

H. Use the starter to crank the engine and distribute the oil inside the cylinder.

I. Check and tighten all bolts, nuts, and screws.

   **Note:** Repair or replace any parts that are worn or damaged.

J. Check the condition of all spray hoses.

   **Note:** Replace any hoses that are worn or damaged.

K. Tighten all hose fittings.

L. Paint all scratched or bare metal surfaces with paint (available from your Authorized Service Dealer).

M. Store the machine in a clean, dry garage or storage area.

N. Remove the battery from the chassis, check the electrolyte level, and charge the battery fully; refer to Charging the Battery (page 63).

   ***Important:*** **The battery must be fully charged to prevent it from freezing and being damaged at temperatures below 0°C (32°F). A fully charged battery maintains its charge for about 50 days at temperatures lower than 4°C (40°F). If the temperatures will be above 4°C (40°F), check the water level in the battery and charge it every 30 days.**

   **Note:** Do not connect the battery cables to the battery posts during storage.

O. Remove the key from the starter switch and put the key in a safe place out of the reach of children.

P. Cover the machine to protect it and keep it clean.

# Troubleshooting

## Troubleshooting the Engine and Vehicle

| Problem | Possible Cause | Corrective Action |
|---|---|---|
| The starter does not rotate the engine. | 1. The electrical connections are corroded or loose.<br>2. A fuse is blown or loose.<br>3. The battery is discharged.<br>4. A broken starter or starter solenoid.<br>5. Seized internal engine components. | 1. Check the electrical connections for good contact.<br>2. Correct or replace fuse.<br>3. Charge or replace the battery.<br>4. Contact your Authorized Service Dealer.<br>5. Contact your Authorized Service Dealer. |
| The engine cranks but does not start. | 1. The fuel tank is empty.<br>2. Dirt, water, or stale fuel is in the fuel system.<br>3. Clogged fuel line.<br>4. The kill relay is not energized.<br>5. The starter switch is broken. | 1. Fill the tank with fresh fuel.<br>2. Drain and flush the fuel system; add fresh fuel.<br>3. Clean or replace.<br>4. Contact your Authorized Service Dealer.<br>5. Contact your Authorized Service Dealer. |
| The engine starts but does not keep running. | 1. The fuel-tank vent is restricted.<br>2. Dirt or water in the fuel system.<br>3. The fuel filter is clogged.<br>4. A fuse is blown or loose.<br>5. The fuel pump is broken.<br>6. Loose wires or poor connections.<br>7. The cylinder-head gasket is broken. | 1. Replace the fuel cap.<br>2. Drain and flush the fuel system; add fresh fuel.<br>3. Replace the fuel filter.<br>4. Correct or replace the fuse.<br>5. Contact your Authorized Service Dealer.<br>6. Check and tighten wire connections.<br>7. Contact your Authorized Service Dealer. |
| The engine runs but knocks or misses. | 1. Dirt, water, or stale fuel is in the fuel system.<br>2. Loose wires or poor connections.<br>3. The engine is overheating. | 1. Drain and flush the fuel system; add fresh fuel.<br>2. Check and tighten wire connections.<br>3. See “The engine overheats” below. |
| The engine does not idle. | 1. The fuel-tank vent is restricted.<br>2. Dirt, water, or stale fuel is in the fuel system.<br>3. The fuel pump is broken.<br>4. Low compression.<br>5. The air-cleaner element is dirty. | 1. Replace the fuel cap.<br>2. Drain and flush the fuel system; add fresh fuel.<br>3. Contact your Authorized Service Dealer.<br>4. Contact your Authorized Service Dealer.<br>5. Replace the air-filter element. |
| The engine overheats. | 1. The crankcase-oil level is incorrect.<br>2. The coolant level is low.<br>3. Excessive loading.<br>4. The air-intake screens are dirty.<br>5. The cooling fins and air passages under the engine-blower housing and/or the rotating-air-intake screen are plugged. | 1. Fill or drain to the FULL mark.<br>2. Check the coolant level and replenish it as needed.<br>3. Reduce load; use lower ground speed.<br>4. Clean with the air-intake screens with every use.<br>5. Clean the cooling fins and air passages with every use. |

| Problem | Possible Cause | Corrective Action |
|---|---|---|
| The engine loses power. | 1. The crankcase-oil level is incorrect.<br>2. The air-cleaner element is dirty.<br>3. Dirt, water, or stale fuel is in the fuel system.<br>4. The engine is overheated.<br>5. The vent hole in the fuel-tank vent fitting is plugged.<br>6. Low compression. | 1. Fill or drain to the FULL mark.<br>2. Replace.the air-cleaner element.<br>3. Drain and flush the fuel system; add fresh fuel.<br>4. See “The engine overheats”.<br>5. Replace the fuel cap.<br>6. Contact your Authorized Service Dealer. |
| There is abnormal vibration or noise. | 1. The engine-mounting bolts are loose.<br>2. There is a problem with the engine. | 1. Tighten the engine-mounting bolts.<br>2. Contact your Authorized Service Dealer. |
| The machine does not operate or is sluggish in either direction because the engine bogs down or stalls. | 1. The parking brake is set. | 1. Release the parking brake. |
| The machine does not operate in either direction. | 1. The parking brake was not released or the parking brake is not releasing.<br>2. The transmission is broken.<br>3. The control linkage needs adjustment or replacement.<br>4. The driveshaft or wheel-hub key has been damaged. | 1. Release the parking brake or check the linkage.<br>2. Contact your Authorized Service Dealer.<br>3. Contact your Authorized Service Dealer.<br>4. Contact your Authorized Service Dealer. |

# Troubleshooting the Spray System

| Problem | Possible Cause | Corrective Action |
|---|---|---|
| A boom section does not spray. | 1. The electrical connection on the boom valve is dirty or disconnected.<br>2. Blown fuse.<br>3. Pinched hose.<br>4. A boom-bypass valve is improperly adjusted.<br>5. Damaged boom valve.<br>6. Damaged electrical system. | 1. Turn the valve off manually. Disconnect the electrical connector on the valve and clean all leads, then connect it.<br>2. Check the fuses and replace them as necessary.<br>3. Repair or replace the hose.<br>4. Adjust the boom-bypass valves.<br>5. Contact your Authorized Service Dealer.<br>6. Contact your Authorized Service Dealer. |
| A boom section does not turn off. | 1. The valve is damaged. | 1. Disassemble the boom-section valve; refer to the Cleaning section. Inspect all the parts and replace any that are damaged. |
| A boom valve is leaking. | 1. An O-ring is deteriorated. | 1. Disassemble the valve and replace the seals using the Valve Repair Kit; contact your Authorized Service Dealer. |
| The pressure drops when you turn on a boom. | 1. The boom-bypass valve is improperly adjusted.<br>2. There is an obstruction in the boom-valve body.<br>3. A nozzle filter is damaged or clogged. | 1. Adjust the boom-bypass valve.<br>2. Remove the inlet and outlet connections to the boom valve and remove any obstructions.<br>3. Remove and inspect all nozzles. |

| Problem | Possible Cause | Corrective Action |
|---|---|---|
| A boom actuator is not operating properly. | 1. A thermal breaker in the fuse block that is responsible for powering the actuator has been tripped due to overheating. | 1. Wait for the system to cool down before resuming operation. If the thermal breakers trip repeatedly, contact your Authorized Service Dealer. |
| | 2. A thermal breaker in the boom actuator that is responsible for powering the actuator has been tripped or malfunctioned. | 2. Contact your Authorized Service Dealer. |

# Notes:

# Notes:

# International Distributor List

| Distributor: | Country: | Phone Number: | Distributor: | Country: | Phone Number: |
|---|---|---|---|---|---|
| Agrolanc Kft | Hungary | 36 27 539 640 | Maquiver S.A. | Colombia | 57 1 236 4079 |
| Asian American Industrial (AAI) | Hong Kong | 852 2497 7804 | Maruyama Mfg. Co. Inc. | Japan | 81 3 3252 2285 |
| B-Ray Corporation | Korea | 82 32 551 2076 | Mountfield a.s. | Czech Republic | 420 255 704 220 |
| Brisa Goods LLC | Mexico | 1 210 495 2417 | Mountfield a.s. | Slovakia | 420 255 704 220 |
| Casco Sales Company | Puerto Rico | 787 788 8383 | Munditol S.A. | Argentina | 54 11 4 821 9999 |
| Ceres S.A. | Costa Rica | 506 239 1138 | Norma Garden | Russia | 7 495 411 61 20 |
| CSSC Turf Equipment (pvt) Ltd. | Sri Lanka | 94 11 2746100 | Oslinger Turf Equipment SA | Ecuador | 593 4 239 6970 |
| Cyril Johnston & Co. | Northern Ireland | 44 2890 813 121 | Oy Hako Ground and Garden Ab | Finland | 358 987 00733 |
| Cyril Johnston & Co. | Republic of Ireland | 44 2890 813 121 | Parkland Products Ltd. | New Zealand | 64 3 34 93760 |
| Fat Dragon | China | 886 10 80841322 | Perfetto | Poland | 48 61 8 208 416 |
| Femco S.A. | Guatemala | 502 442 3277 | Pratoverde SRL. | Italy | 39 049 9128 128 |
| FIVEMANS New-Tech Co., Ltd | China | 86-10-6381 6136 | Prochaska & Cie | Austria | 43 1 278 5100 |
| ForGarder OU | Estonia | 372 384 6060 | RT Cohen 2004 Ltd. | Israel | 972 986 17979 |
| G.Y.K. Company Ltd. | Japan | 81 726 325 861 | Riversa | Spain | 34 9 52 83 7500 |
| Geomechaniki of Athens | Greece | 30 10 935 0054 | Lely Turfcare | Denmark | 45 66 109 200 |
| Golf international Turizm | Turkey | 90 216 336 5993 | Lely (U.K.) Limited | United Kingdom | 44 1480 226 800 |
| Hako Ground and Garden | Sweden | 46 35 10 0000 | Solvert S.A.S. | France | 33 1 30 81 77 00 |
| Hako Ground and Garden | Norway | 47 22 90 7760 | Spypros Stavrinides Limited | Cyprus | 357 22 434131 |
| Hayter Limited (U.K.) | United Kingdom | 44 1279 723 444 | Surge Systems India Limited | India | 91 1 292299901 |
| Hydroturf Int. Co Dubai | United Arab Emirates | 97 14 347 9479 | T-Markt Logistics Ltd. | Hungary | 36 26 525 500 |
| Hydroturf Egypt LLC | Egypt | 202 519 4308 | Toro Australia | Australia | 61 3 9580 7355 |
| Irrimac | Portugal | 351 21 238 8260 | Toro Europe NV | Belgium | 32 14 562 960 |
| Irrigation Products Int'l Pvt Ltd. | India | 0091 44 2449 4387 | Valtech | Morocco | 212 5 3766 3636 |
| Jean Heybroek b.v. | Netherlands | 31 30 639 4611 | Victus Emak | Poland | 48 61 823 8369 |

## European Privacy Notice

The Information Toro Collects
Toro Warranty Company (Toro) respects your privacy. In order to process your warranty claim and contact you in the event of a product recall, we ask you to share certain personal information with us, either directly or through your local Toro company or dealer.

The Toro warranty system is hosted on servers located within the United States where privacy law may not provide the same protection as applies in your country.

BY SHARING YOUR PERSONAL INFORMATION WITH US, YOU ARE CONSENTING TO THE PROCESSING OF YOUR PERSONAL INFORMATION AS DESCRIBED IN THIS PRIVACY NOTICE.

The Way Toro Uses Information
Toro may use your personal information to process warranty claims, to contact you in the event of a product recall and for any other purpose which we tell you about. Toro may share your information with Toro's affiliates, dealers or other business partners in connection with any of these activities. We will not sell your personal information to any other company. We reserve the right to disclose personal information in order to comply with applicable laws and with requests by the appropriate authorities, to operate our systems properly or for our own protection or that of other users.

Retention of your Personal Information
We will keep your personal information as long as we need it for the purposes for which it was originally collected or for other legitimate purposes (such as regulatory compliance), or as required by applicable law.

Toro's Commitment to Security of Your Personal Information
We take reasonable precautions in order to protect the security of your personal information. We also take steps to maintain the accuracy and current status of personal information.

Access and Correction of your Personal Information
If you would like to review or correct your personal information, please contact us by email at legal@toro.com.

## Australian Consumer Law

Australian customers will find details relating to the Australian Consumer Law either inside the box or at your local Toro Dealer.

# The Toro Warranty

A Two-Year Limited Warranty

## Conditions and Products Covered

The Toro Company and its affiliate, Toro Warranty Company, pursuant to an agreement between them, jointly warrant your Toro Commercial product ("Product") to be free from defects in materials or workmanship for two years or 1500 operational hours*, whichever occurs first. This warranty is applicable to all products with the exception of Aerators (refer to separate warranty statements for these products). Where a warrantable condition exists, we will repair the Product at no cost to you including diagnostics, labor, parts, and transportation. This warranty begins on the date the Product is delivered to the original retail purchaser.
* Product equipped with an hour meter.

## Instructions for Obtaining Warranty Service

You are responsible for notifying the Commercial Products Distributor or Authorized Commercial Products Dealer from whom you purchased the Product as soon as you believe a warrantable condition exists. If you need help locating a Commercial Products Distributor or Authorized Dealer, or if you have questions regarding your warranty rights or responsibilities, you may contact us at:

Toro Commercial Products Service Department
Toro Warranty Company
8111 Lyndale Avenue South
Bloomington, MN 55420-1196

952–888–8801 or 800–952–2740
E-mail: commercial.warranty@toro.com

## Owner Responsibilities

As the Product owner, you are responsible for required maintenance and adjustments stated in your *Operator's Manual*. Failure to perform required maintenance and adjustments can be grounds for disallowing a warranty claim.

## Items and Conditions Not Covered

Not all product failures or malfunctions that occur during the warranty period are defects in materials or workmanship. This warranty does not cover the following:

- Product failures which result from the use of non-Toro replacement parts, or from installation and use of add-on, or modified non-Toro branded accessories and products. A separate warranty may be provided by the manufacturer of these items.
- Product failures which result from failure to perform recommended maintenance and/or adjustments. Failure to properly maintain your Toro product per the Recommended Maintenance listed in the *Operator's Manual* can result in claims for warranty being denied.
- Product failures which result from operating the Product in an abusive, negligent, or reckless manner.
- Parts subject to consumption through use unless found to be defective. Examples of parts which are consumed, or used up, during normal Product operation include, but are not limited to, brake pads and linings, clutch linings, blades, reels, rollers and bearings (sealed or greasable), bed knives, spark plugs, castor wheels and bearings, tires, filters, belts, and certain sprayer components such as diaphragms, nozzles, and check valves, etc.
- Failures caused by outside influence. Conditions considered to be outside influence include, but are not limited to, weather, storage practices, contamination, use of unapproved fuels, coolants, lubricants, additives, fertilizers, water, or chemicals, etc.
- Failure or performance issues due to the use of fuels (e.g. gasoline, diesel, or biodiesel) that do not conform to their respective industry standards.
- Normal noise, vibration, wear and tear, and deterioration.
- Normal "wear and tear" includes, but is not limited to, damage to seats due to wear or abrasion, worn painted surfaces, scratched decals or windows, etc.

## Parts

Parts scheduled for replacement as required maintenance are warranted for the period of time up to the scheduled replacement time for that part. Parts replaced under this warranty are covered for the duration of the original product warranty and become the property of Toro. Toro will make the final decision whether to repair any existing part or assembly or replace it. Toro may use remanufactured parts for warranty repairs.

## Deep Cycle and Lithium-Ion Battery Warranty:

Deep cycle and Lithium-Ion batteries have a specified total number of kilowatt-hours they can deliver during their lifetime. Operating, recharging, and maintenance techniques can extend or reduce total battery life. As the batteries in this product are consumed, the amount of useful work between charging intervals will slowly decrease until the battery is completely worn out. Replacement of worn out batteries, due to normal consumption, is the responsibility of the product owner. Battery replacement may be required during the normal product warranty period at owner's expense. Note: (Lithium-Ion battery only): A Lithium-Ion battery has a part only prorated warranty beginning year 3 through year 5 based on the time in service and kilowatt hours used. Refer to the *Operator's Manual* for additional information.

## Maintenance is at Owner's Expense

Engine tune-up, lubrication, cleaning and polishing, replacement of filters, coolant, and completing recommended maintenance are some of the normal services Toro products require that are at the owner's expense.

## General Conditions

Repair by an Authorized Toro Distributor or Dealer is your sole remedy under this warranty.

**Neither The Toro Company nor Toro Warranty Company is liable for indirect, incidental or consequential damages in connection with the use of the Toro Products covered by this warranty, including any cost or expense of providing substitute equipment or service during reasonable periods of malfunction or non-use pending completion of repairs under this warranty. Except for the Emissions warranty referenced below, if applicable, there is no other express warranty. All implied warranties of merchantability and fitness for use are limited to the duration of this express warranty.**

Some states do not allow exclusions of incidental or consequential damages, or limitations on how long an implied warranty lasts, so the above exclusions and limitations may not apply to you. This warranty gives you specific legal rights, and you may also have other rights which vary from state to state.

## Note regarding engine warranty:

The Emissions Control System on your Product may be covered by a separate warranty meeting requirements established by the U.S. Environmental Protection Agency (EPA) and/or the California Air Resources Board (CARB). The hour limitations set forth above do not apply to the Emissions Control System Warranty. Refer to the Engine Emission Control Warranty Statement supplied with your product or contained in the engine manufacturer's documentation for details

## Countries Other than the United States or Canada

Customers who have purchased Toro products exported from the United States or Canada should contact their Toro Distributor (Dealer) to obtain guarantee policies for your country, province, or state. If for any reason you are dissatisfied with your Distributor's service or have difficulty obtaining guarantee information, contact the Toro importer.

374-0253 Rev D