Form No. 3405-679 Rev C

TORO®

Count on it.

Parts Catalog

# 52in TITAN® HD 2500 Series

## Riding Mower

**Model No. 74471—Serial No. 400000000 and Up**

Register at www.Toro.com.
Original Instructions (EN)

*3405-679* C

# Ordering Replacement Parts

To order replacement parts, please supply the part number, the quantity, and the description of each part desired.

### Understanding Reference Numbers

Each identified part in an illustration has a reference number. The reference number for a part also appears in the parts list, along with other information about the part.

This catalog uses two special reference number formats, one to indicate parts in a service assembly and another to indicate the quantity of a given part in an illustration.

### Service Assembly Reference Numbers

Parts in service assemblies have reference numbers in the form a:b. The a represents the reference number of the entire service assembly and the b represents a sequential number unique to each part within the service assembly.

For example, a wheel assembly might be identified by reference number 6, the tire by 6:1, the valve by 6:2, and the wheel by 6:3. When you order the assembly identified by reference number 6, you receive all parts identified by reference numbers 6:1,6:2, and 6:3. However, you may also order any part individually. Reference numbers of this type appear in illustration and in parts lists.

### Reference Numbers Indicating Quantity

In an illustration, if a reference number indicates more than one part, the reference number has the form nX y. The n represents the quantity of the part, the X is the multiplication symbol, and the y represents the reference number.

For example, in an illustration, the reference number 2X 37 means that two of the parts identified by reference number 37 are indicated.

# Contents

Frame, Roll-Over Protection System and Caster Assembly . . . . . 4
Fork and Caster Wheel Assembly . . . . . 6
Roll-Over Protection System Assembly No. 126-9526. . . . . 8
Hydraulic Assembly . . . . . 10
LH Transaxle Assembly No. 126-2883 . . . . . 12
RH Transaxle Assembly No. 126-2884 . . . . . 14
Control Console and Guard Assembly . . . . . 16
Fuel System and Vent Hose Assembly . . . . . 18
Fuel Tank Assembly No. 126-4724 . . . . . 20
Seat Mount Assembly . . . . . 22
Seat Pan and Latch Assembly No. 126-7309 . . . . . 24
Seat Assembly No. 126-8293 . . . . . 26
Motion Control Assembly . . . . . 28
LH Motion Control Assembly . . . . . 30
RH Motion Control Assembly . . . . . 32
Electrical Assembly . . . . . 34
Wire Harness Assembly No. 126-5803. . . . . 36
Deck Lift Assembly. . . . . 38
Deck Strut Assembly No. 126-8365 . . . . . 40
Engine Assembly . . . . . 42
Deck Assembly . . . . . 44
Deck Decal Assembly No. 127-6797 . . . . . 46
Idler Arm Assembly No. 126-0976 . . . . . 48
Rubber Deflector Assembly No. 108-2792. . . . . 50
Attachments and Accessories . . . . . 52

**© 2018—The Toro® Company**
**8111 Lyndale Avenue South**
**Bloomington, MN 55420**



**Contact us at www.Toro.com.**
**Printed in the USA.**
**All Rights Reserved**

# Frame, Roll-Over Protection System and Caster Assembly

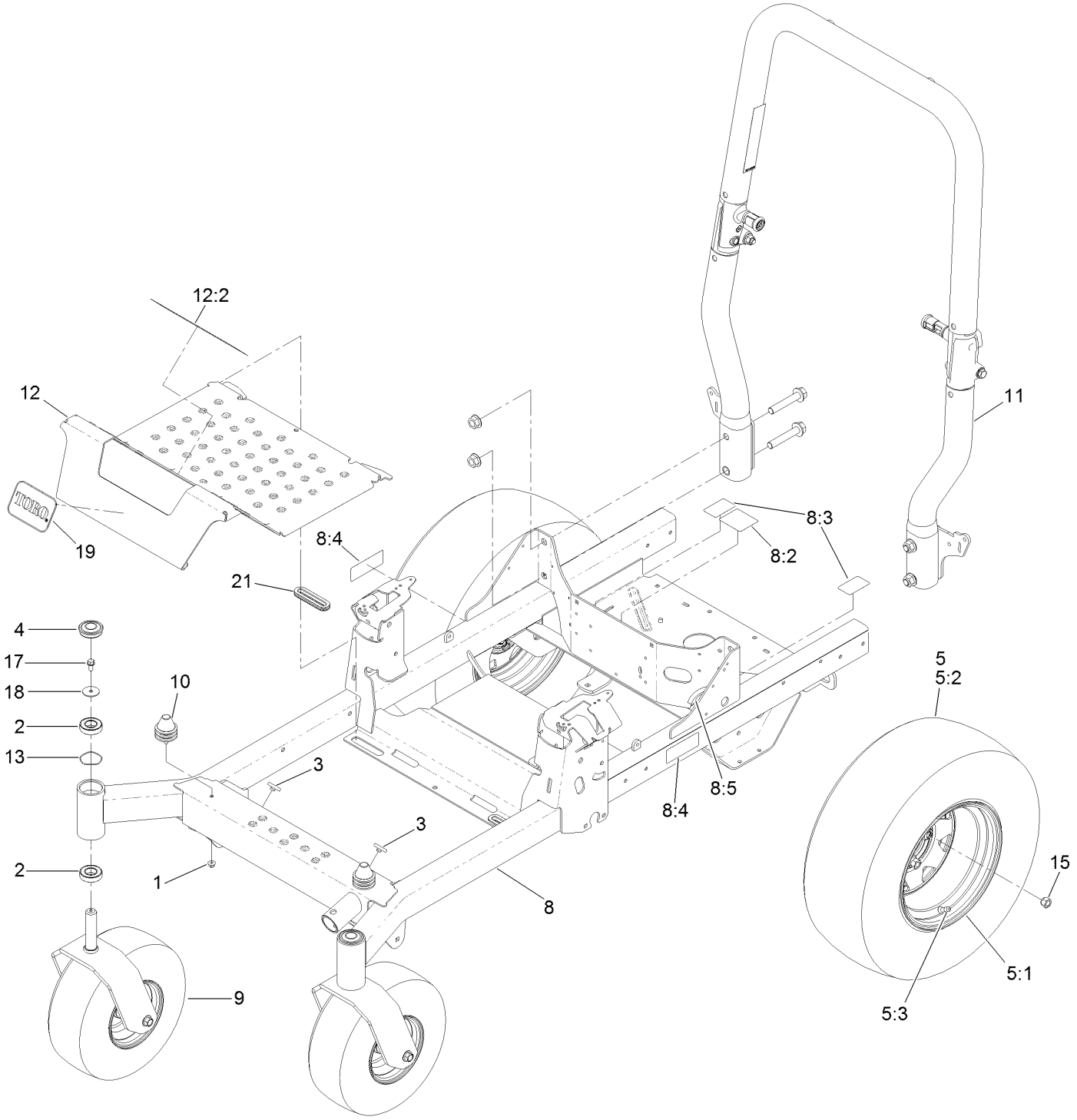

# Frame, Roll-Over Protection System and Caster Assembly (continued)

| Ref. | Part Number | Qty. | Description |
|---|---|---|---|
| 1 | 104-8300 | 2 | Nut-HF, NI |
| 2 | 109-3678 | 4 | Bearing-Ball |
| 3 | 109-9233 | 2 | Bumper-Push-In, Rubber |
| 4 | 116-4348 | 2 | Cap-Grease |
| 5 | 126-7831 | 2 | Wheel And Tire ASM |
| 5:1 | 126-7828 | 1 | Rim-Wheel |
| 5:2 | 126-4875 | 1 | Tire |
| 5:3 | 232-27 | 1 | Stem-Valve |
| 8 | 126-4699 | 1 | Frame ASM |
| 8:2 | 109-6014 | 1 | Decal-Routing, Belt |
| 8:3 | 116-8588 | 2 | Decal-Release, Drive |
| 8:4 | 126-4363 | 2 | Decal-Warning |
| 8:5 | 127-6618 | 1 | Strip-Seal |

| Ref. | Part Number | Qty. | Description |
|---|---|---|---|
| 9 | | 2 | Front Caster ASM (W/Fork) ● |
| 10 | 126-5491 | 2 | Isolator |
| 11 | 126-9526 | 1 | ROPS ASM |
| 12 | 126-5872 | 1 | Pan-Floor |
| 12:2 | 126-8383 | 1 | Decal-Danger |
| 13 | 126-5897 | 2 | Spring |
| 15 | 242-50 | 8 | Nut-Lug |
| 17 | 3234-5 | 2 | Screw-HHF |
| 18 | 3256-68 | 2 | Washer-Flat |
| 19 | 67-1300 | 1 | Decal |
| 21 | 126-7065 | 2 | Grommet-Rubber |

● Not serviced separately

# Fork and Caster Wheel Assembly

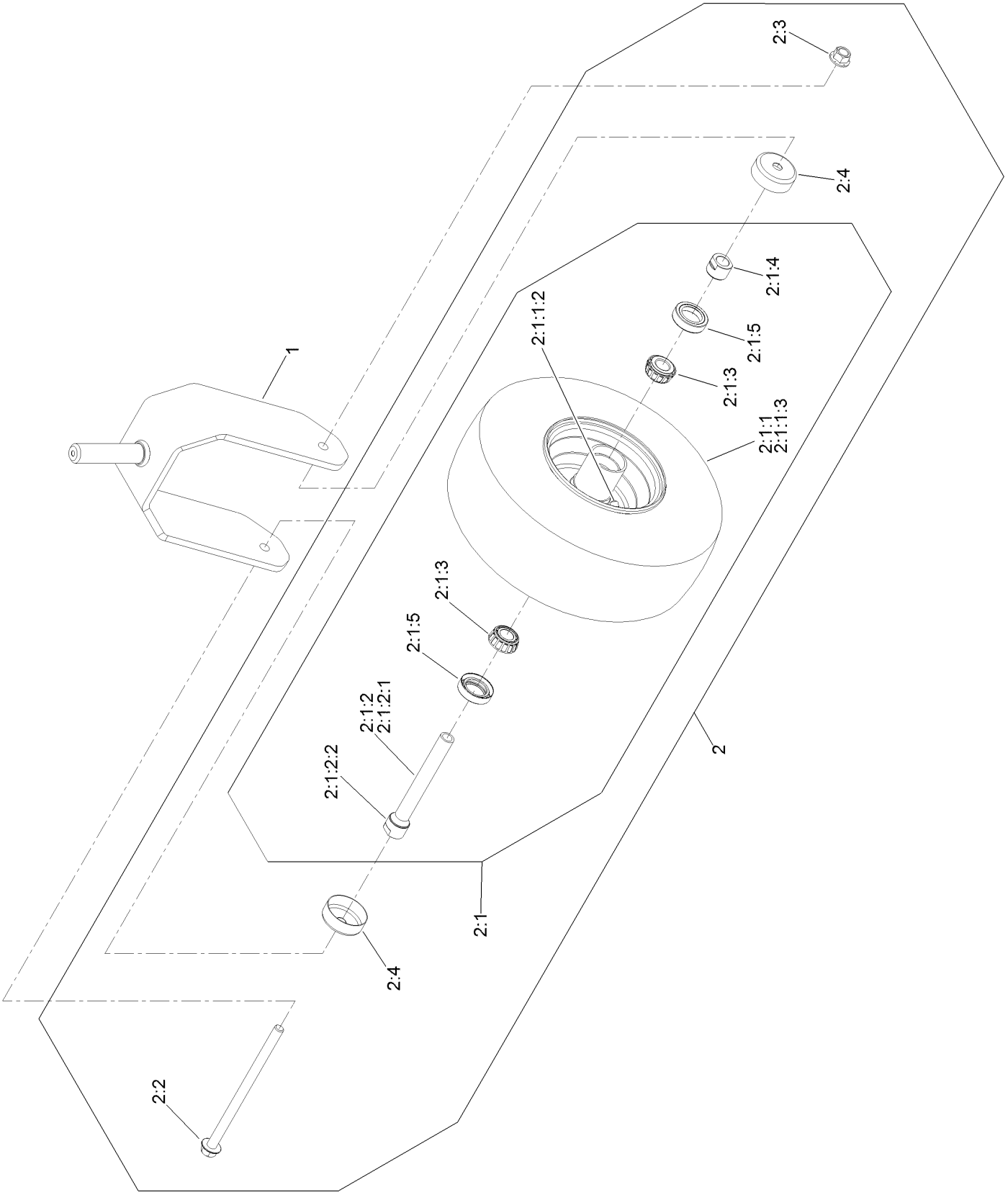

# Fork and Caster Wheel Assembly (continued)

| Ref. | Part Number | Qty. | Description |
|---|---|---|---|
| 1 | 126-4312-01 | 1 | Fork-Caster |
| 2 | 126-7753 | 1 | Wheel ASM |
| 2:1 | | 1 | Wheel And Bearing ASM ● |
| 2:1:1 | | 1 | Wheel And Tire ASM ● |
| 2:1:1:2 | 5108 | 1 | Valve |
| 2:1:1:3 | 126-5959 | 1 | Tire |
| 2:1:2 | 126-7796 | 1 | Caster Axle ASM |
| 2:1:2:1 | 126-5220 | 1 | Axle-Caster |
| 2:1:2:2 | 103-3051 | 1 | Spacer-Nut |
| 2:1:3 | 1-633585 | 2 | Bearing-Cone, Taper |
| 2:1:4 | 103-3051 | 1 | Spacer-Nut |
| 2:1:5 | 103-0063 | 2 | Seal-Caster |
| 2:2 | 126-5389 | 1 | Screw-HHF |
| 2:3 | 99-5107 | 1 | Nut-Lock |
| 2:4 | 103-2768 | 2 | Guard-Seal |

● Not serviced separately

# Roll-Over Protection System Assembly
# No. 126-9526

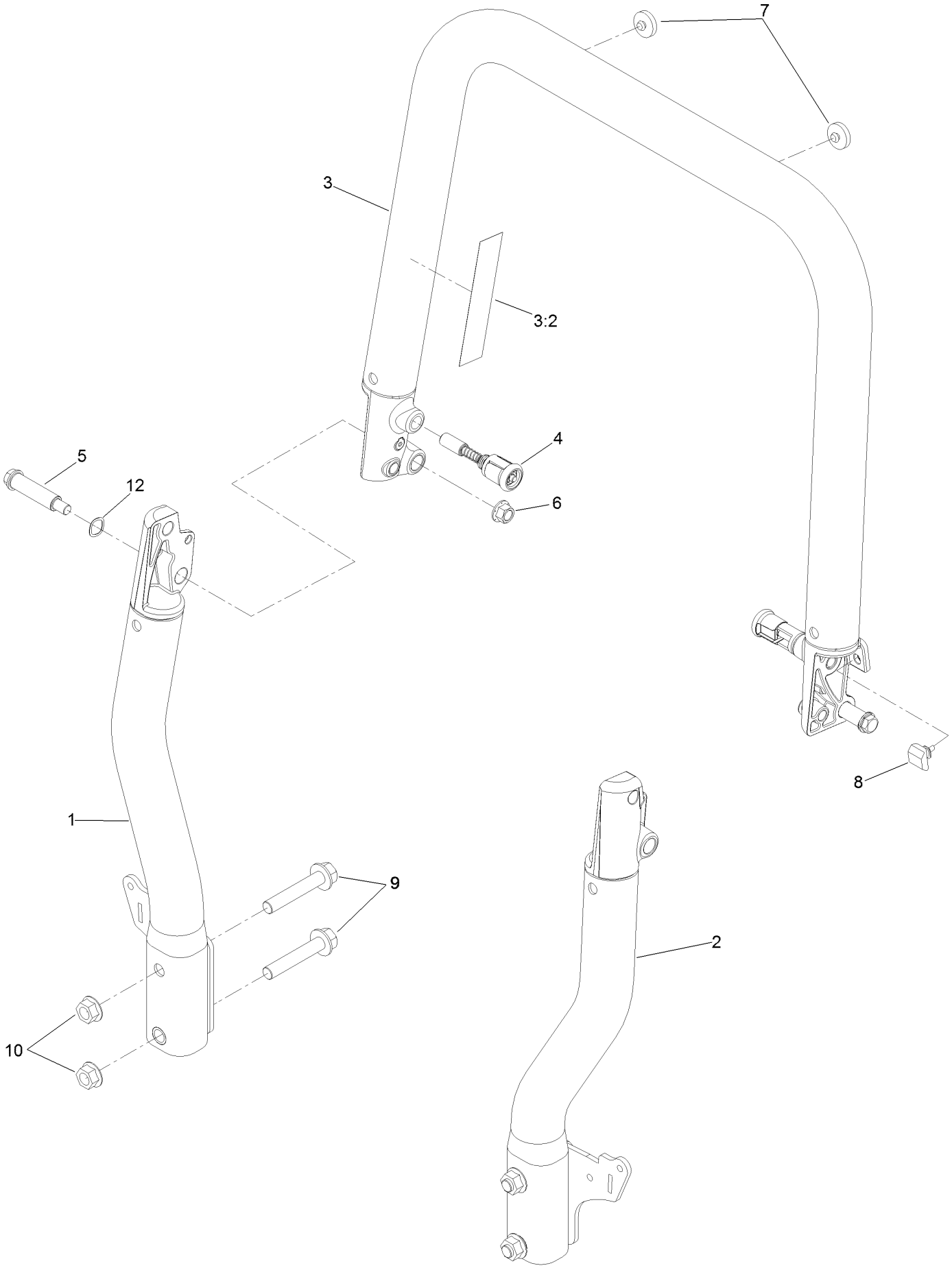

# Roll-Over Protection System Assembly No. 126-9526 (continued)

| Ref. | Part Number | Qty. | Description |
|---|---|---|---|
| 1 | | 1 | Tube-Upright, RH ● |
| 2 | | 1 | Tube-Upright, LH ● |
| 3 | | 1 | Top Tube ASM ● |
| 3:2 | 107-3069 | 1 | Decal-Warning |
| 4 | 116-0104 | 2 | Pin-Spring |
| 5 | 126-9209 | 2 | Bolt-Shoulder |
| 6 | 99-5107 | 2 | Nut-Lock |
| 7 | 109-9233 | 2 | Bumper-Push-In, Rubber |
| 8 | 126-9966 | 2 | Bumper-ROPS |
| 9 | 126-9488 | 4 | Screw-HHF |
| 10 | 32128-50 | 4 | Nut-Flange |
| 12 | 119-4164 | 2 | Washer-Wave |

● Not serviced separately

# Hydraulic Assembly

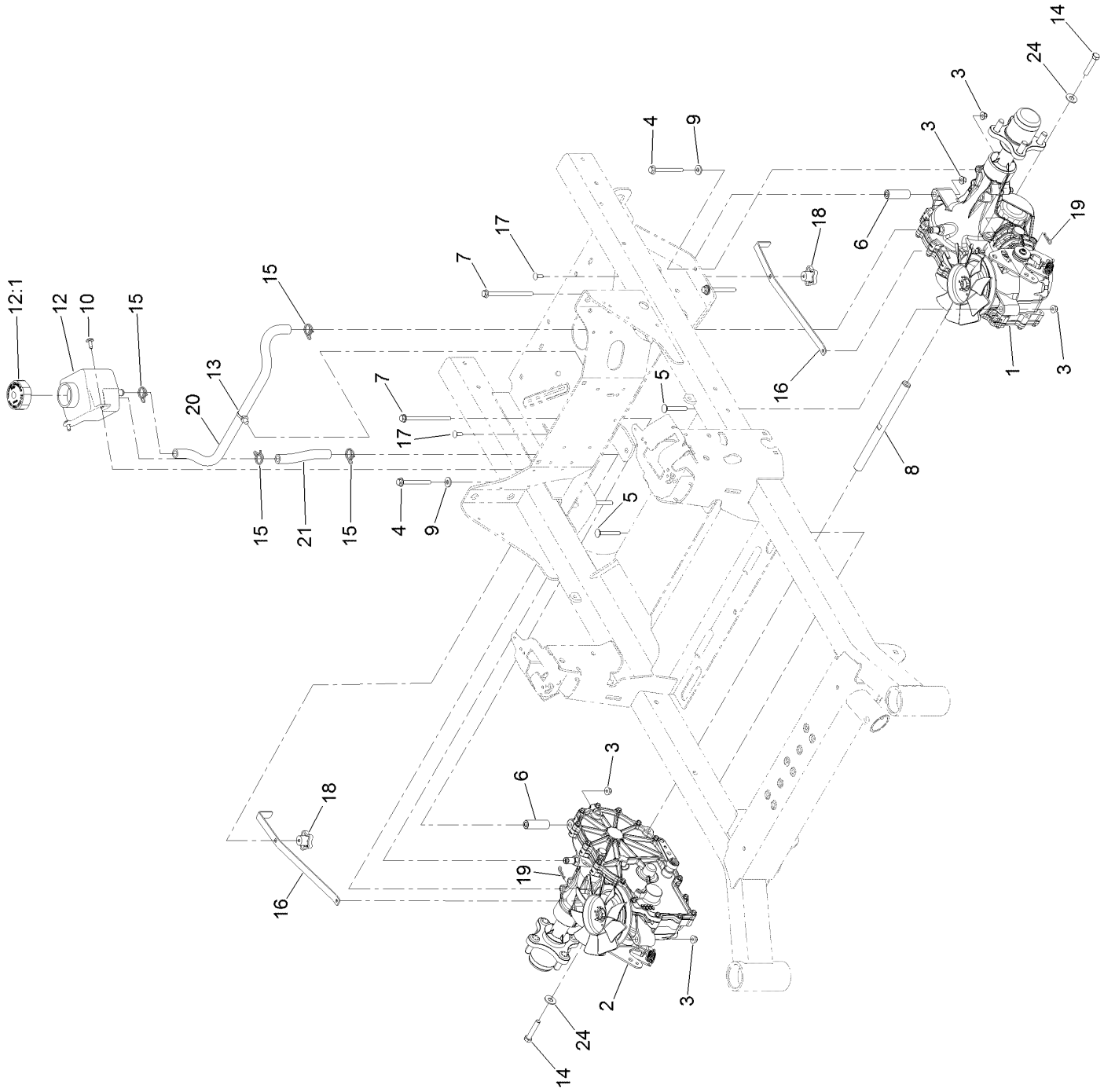

# Hydraulic Assembly (continued)

| Ref. | Part Number | Qty. | Description |
|---|---|---|---|
| 1 | 126-2883 | 1 | LH Transaxle ASM |
| 2 | 126-2884 | 1 | RH Transaxle ASM |
| 3 | 104-8300 | 8 | Nut-HF, NI |
| 4 | 126-4687 | 4 | Screw-HHF |
| 5 | 3230-7 | 2 | Bolt-CARR |
| 6 | 116-5809 | 2 | Spacer-Hydro |
| 7 | 126-5896 | 2 | Screw HHF |
| 8 | 116-6833 | 1 | Shaft-Spacer |
| 9 | 1-303334 | 4 | Washer-Spring |
| 10 | 126-6266 | 2 | Screw-Torx |
| 12 | 109-2250 | 1 | Tank-HYD |

| Ref. | Part Number | Qty. | Description |
|---|---|---|---|
| 12:1 | 109-3320 | 1 | Cap-Reservoir, HYD |
| 13 | 32180-118 | 1 | Clip-Tie |
| 14 | 94-7972 | 2 | Screw-HH W/Loctite ● |
| 15 | 126-0327 | 4 | Clamp-Hose |
| 16 | 109-5395 | 2 | Arm-Bypass, Hydro |
| 17 | 3229-1 | 2 | Bolt-CARR |
| 18 | 108-6402 | 2 | Knob-Handle |
| 19 | 1-806003 | 2 | Pin-Cotter |
| 20 | 126-5668 | 1 | Hose-Hydraulic |
| 21 | 126-5669 | 1 | Hose-Hydraulic |
| 24 | 3256-4 | 2 | Washer-Flat |

● Use Pro-Lock, Nut Type (P/N 1-840022, .5ml tube) on threads.

# LH Transaxle Assembly No. 126-2883

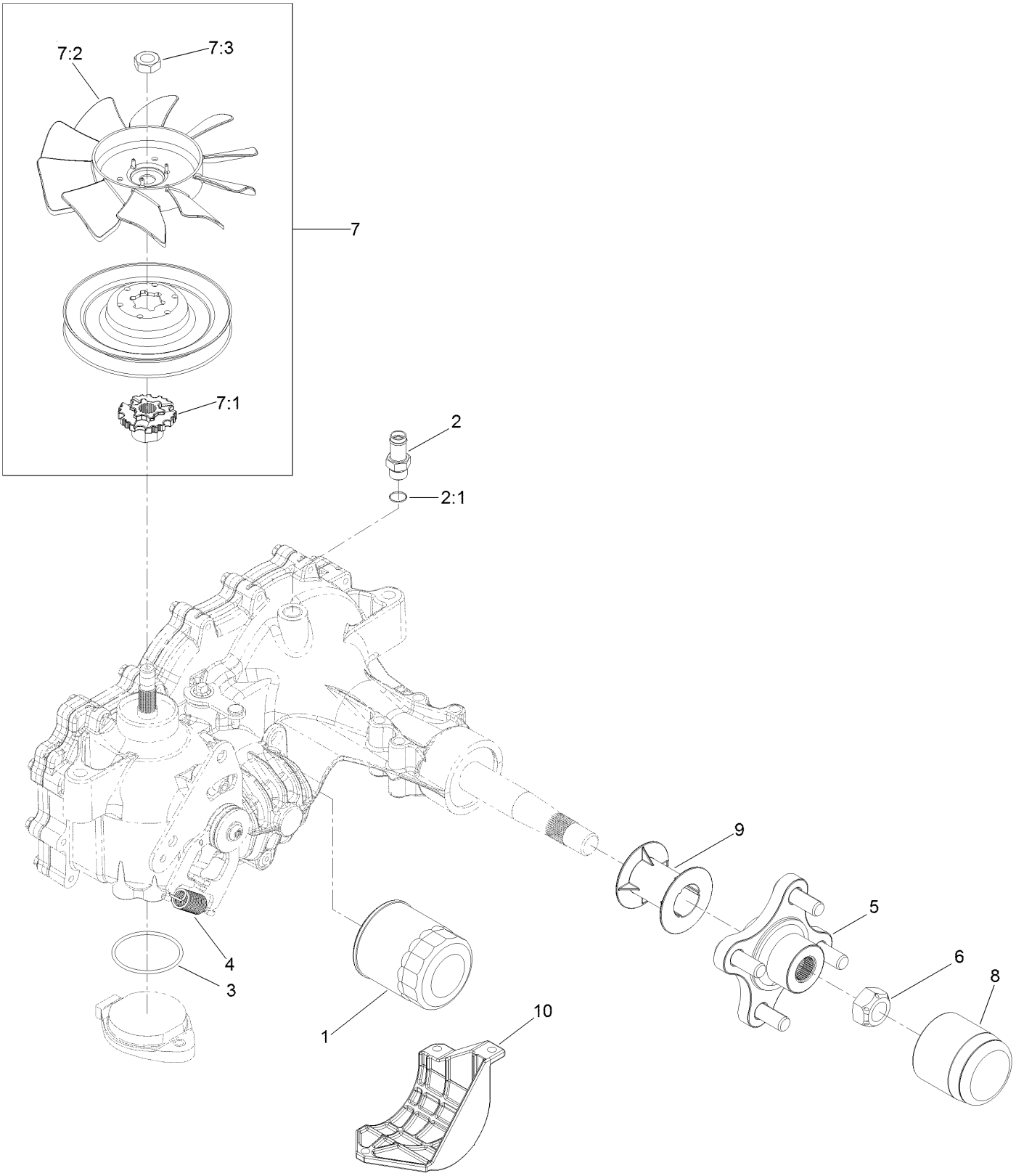

# LH Transaxle Assembly No. 126-2883 (continued)

| Ref. | Part Number | Qty. | Description |
|---|---|---|---|
| 1 | 109-3321 | 1 | Element-Oil Filter, HYD |
| 2 | 109-3278 | 1 | Adapter-Straight |
| 2:1 | 237-42 | 1 | O-Ring |
| 3 | 109-3540 | 1 | O Ring-Seal |
| 4 | 109-5592 | 1 | Spring-Extension |
| 5 | 116-3872 | 1 | Hub-Offset |
| 6 | 109-3536 | 1 | Nut-Hub |
| 7 | 126-8904 | 1 | Fan And Pulley Kit |

| Ref. | Part Number | Qty. | Description |
|---|---|---|---|
| 7:1 | 126-8905 | 1 | Hub-Fan |
| 7:2 | 126-0226 | 1 | Fan |
| 7:3 | 116-9714 | 1 | Nut-HJ |
| 8 | 116-6214 | 1 | Cap-Axle, Long |
| 9 | 116-6213 | 1 | Tube-Axle |
| 10 | 120-7979 | 1 | Guard-Filter, LH |
| 11 | 121-3243 | 1 | Seal Kit ● |

● Not illustrated

# RH Transaxle Assembly No. 126-2884

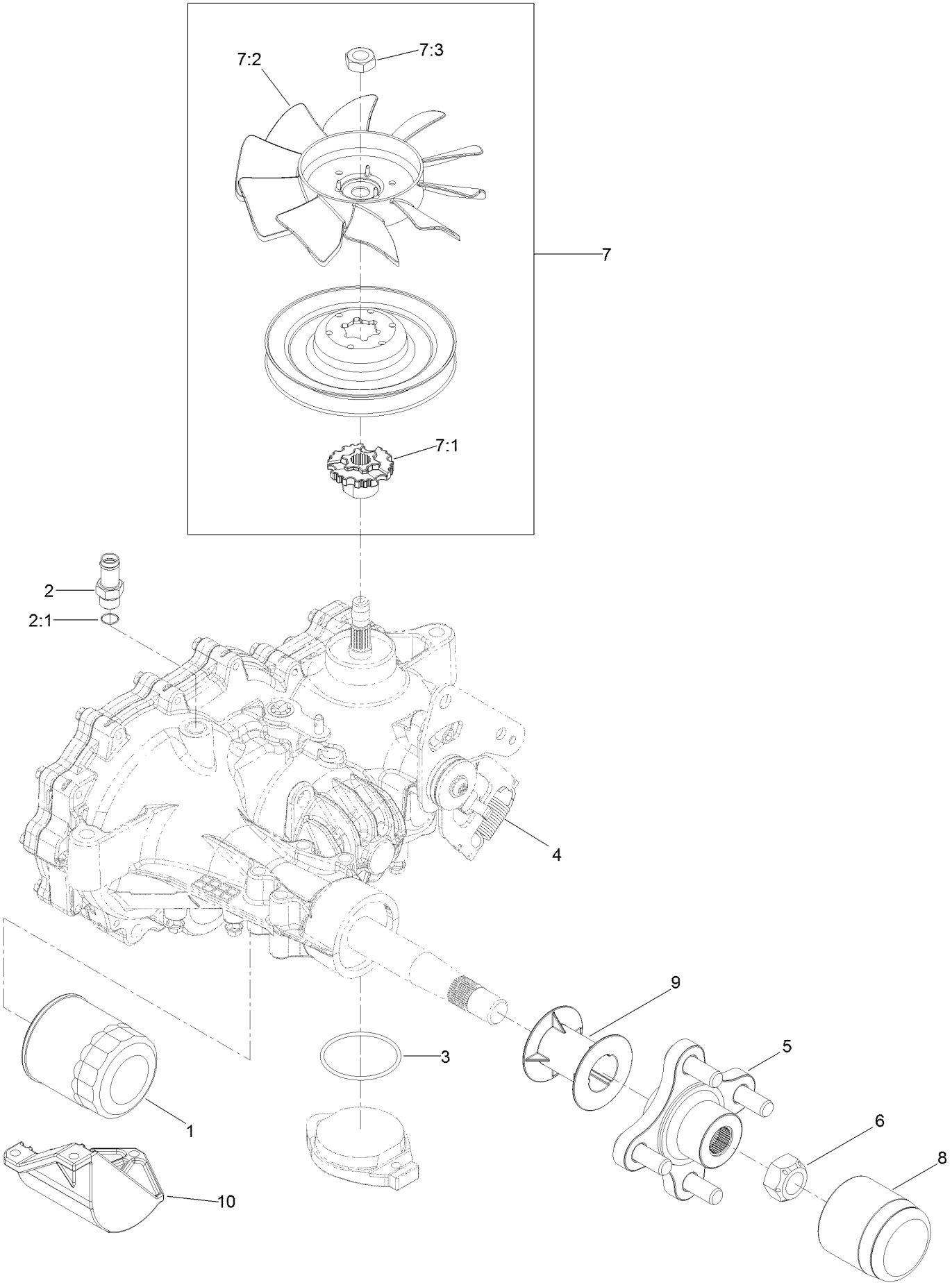

# RH Transaxle Assembly No. 126-2884 (continued)

| Ref. | Part Number | Qty. | Description |
|---|---|---|---|
| 1 | 109-3321 | 1 | Element-Oil Filter, HYD |
| 2 | 109-3278 | 1 | Adapter-Straight |
| 2:1 | 237-42 | 1 | O-Ring |
| 3 | 109-3540 | 1 | O Ring-Seal |
| 4 | 109-5592 | 1 | Spring-Extension |
| 5 | 116-3872 | 1 | Hub-Offset |
| 6 | 109-3536 | 1 | Nut-Hub |
| 7 | 126-8904 | 1 | Fan And Pulley Kit |

| Ref. | Part Number | Qty. | Description |
|---|---|---|---|
| 7:1 | 126-8905 | 1 | Hub-Fan |
| 7:2 | 126-0226 | 1 | Fan |
| 7:3 | 116-9714 | 1 | Nut-HJ |
| 8 | 116-6214 | 1 | Cap-Axle, Long |
| 9 | 116-6213 | 1 | Tube-Axle |
| 10 | 120-7981 | 1 | Guard-Filter, RH |
| 11 | 121-3243 | 1 | Seal Kit ● |

● Not illustrated

# Control Console and Guard Assembly

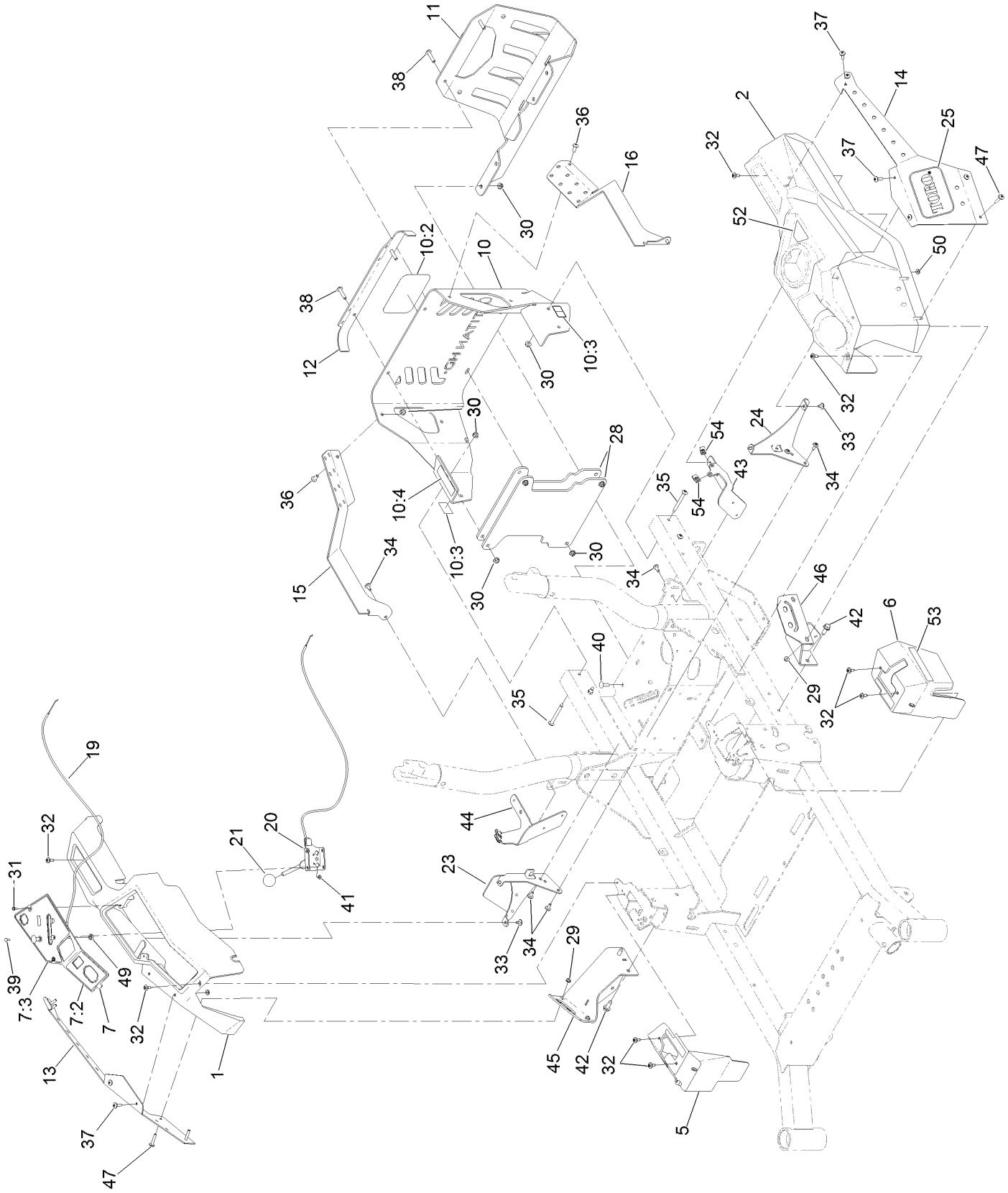

# Control Console and Guard Assembly (continued)

| Ref. | Part Number | Qty. | Description |
|---|---|---|---|
| 1 | 126-4983 | 1 | Console-RH |
| 2 | 126-4984 | 1 | Console-LH |
| 5 | 126-7371 | 1 | Cover-Control, Motion (RH) |
| 6 | 126-7372 | 1 | Cover-Control, Motion (LH) |
| 7 | 136-1673 | 1 | Control Panel ASM |
| 7:2 | 126-9115 | 1 | Decal-Panel, Control |
| 7:3 | 136-1305 | 1 | Decal-Panel, Control |
| 10 | 126-7803 | 1 | Rear Guard ASM |
| 10:2 | 99-4693 | 1 | Decal |
| 10:3 | 106-5517 | 2 | Decal-Warning |
| 10:4 | 117-2718 | 1 | Decal-Arrester, Spark |
| 11 | 126-7664-03 | 1 | Guard-Muffler |
| 12 | 126-6260-01 | 1 | Trim-Upper, Rear |
| 13 | 136-1745-01 | 1 | Cover-Pod, RH |
| 14 | 136-1746-01 | 1 | Cover-LH |
| 15 | 126-9023-01 | 1 | Bracket-Guard, RH |
| 16 | 126-9022-01 | 1 | Bracket-Guard, LH |
| 19 | 126-7009 | 1 | Cable-Control, Choke |
| 20 | 126-7008 | 1 | Cable-Control, Throttle |
| 21 | 1-603175 | 1 | Knob-Ball |
| 23 | 126-9945 | 1 | Support-Console, RH |
| 24 | 126-5532-03 | 1 | Bracket-Console, LH |
| 25 | 68-3640 | 2 | Decal |
| 28 | 126-9165-01 | 2 | Weight-Rear |

| Ref. | Part Number | Qty. | Description |
|---|---|---|---|
| 29 | 104-7201 | 4 | Nut-HF |
| 30 | 104-8300 | 12 | Nut-HF, NI |
| 31 | 117-5036 | 2 | Screw-HWH |
| 32 | 120-7950 | 8 | Screw-Shoulder |
| 33 | 126-5544 | 4 | Screw-Torx |
| 34 | 126-6266 | 8 | Screw-Torx |
| 35 | 126-6267 | 4 | Screw-Torx |
| 36 | 126-6268 | 2 | Screw-Torx |
| 37 | 126-6269 | 8 | Screw-Truss |
| 38 | 126-7439 | 4 | Screw-Torx |
| 39 | 1-807513 | 2 | Bolt-CARR |
| 40 | 3230-22 | 2 | Screw-CARR |
| 41 | 3296-2 | 2 | Nut-Lock, NI |
| 42 | 126-1696 | 4 | Screw-Forming, Thread |
| 43 | 126-9808-03 | 1 | Bracket-Support, Left Pod |
| 44 | 126-9809-03 | 1 | Bracket-Support, Right Pod |
| 45 | 126-9104-01 | 1 | Support-Pod, RH |
| 46 | 126-9105-01 | 1 | Support-Pod, LH |
| 47 | 126-8232 | 4 | Screw-Truss |
| 49 | 3220-3 | 1 | Nut-HJ |
| 50 | 32149-2 | 4 | Nut-Keps |
| 52 | 126-9939 | 1 | Decal-Fill, Fuel |
| 53 | 126-9300 | 2 | Decal |
| 54 | 126-3739 | 4 | Nut-Retainer, U Style |

# Fuel System and Vent Hose Assembly

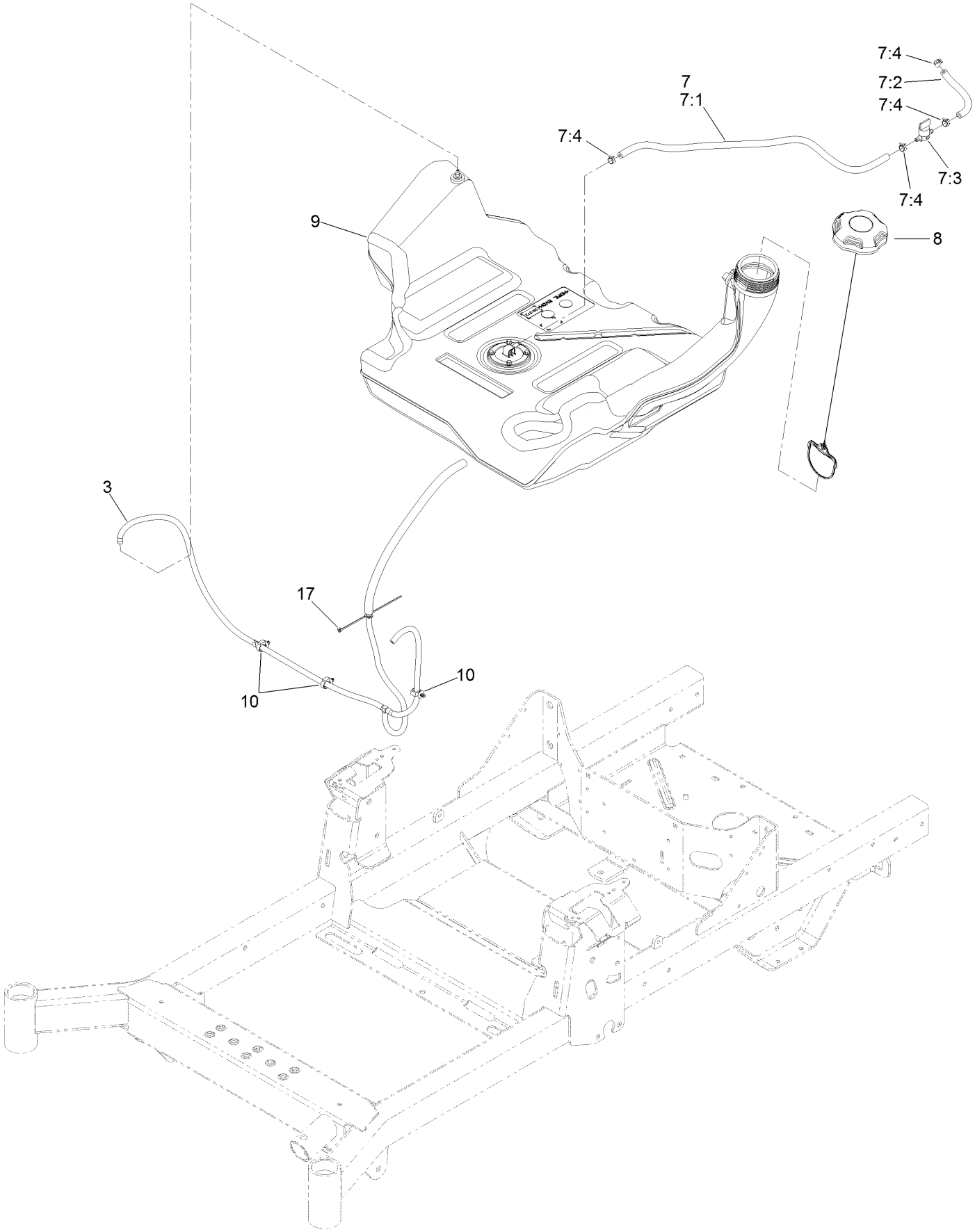

# Fuel System and Vent Hose Assembly (continued)

| Ref. | Part Number | Qty. | Description |
|---|---|---|---|
| 3 | 126-8736 | 1 | Vent Hose ASM |
| 7 | 126-8740 | 1 | Fuel Hose ASM |
| 7:1 | 109-0302 | 1 | Hose-Fuel |
| 7:2 | 109-0678 | 1 | Hose-Fuel |
| 7:3 | 1-603770 | 1 | Valve-Fuel |
| 7:4 | 2412-98 | 4 | Clamp-Hose |
| 8 | 126-4723 | 1 | Cap-Fuel |
| 9 | 126-4724 | 1 | Tank-Fuel |
| 10 | 126-5523 | 3 | Clip |
| 17 | 1-303287 | 1 | Tie-Cable |

# Fuel Tank Assembly No. 126-4724

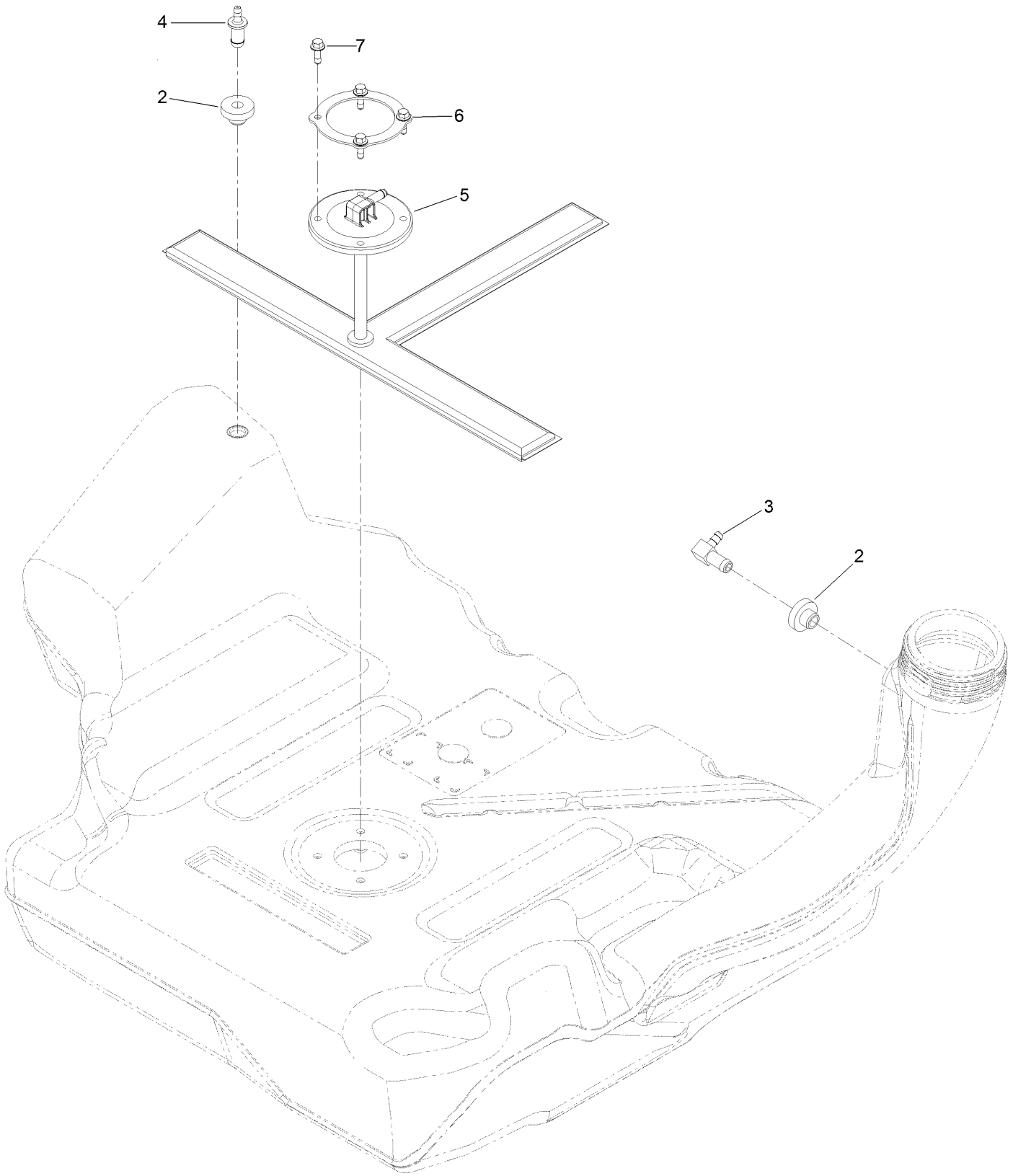

# Fuel Tank Assembly No. 126-4724 (continued)

| Ref. | Part Number | Qty. | Description |
|---|---|---|---|
| 2 | 46-6560 | 2 | Bushing |
| 3 | 126-9057 | 1 | Fitting-90 DEG |
| 4 | 116-4630 | 1 | Fitting-Orifice, Straight |
| 5 | 126-5528 | 1 | Pickup-Fuel |
| 6 | 126-5527 | 1 | Ring-Retainer |
| 7 | 126-5525 | 4 | Bolt |

# Seat Mount Assembly

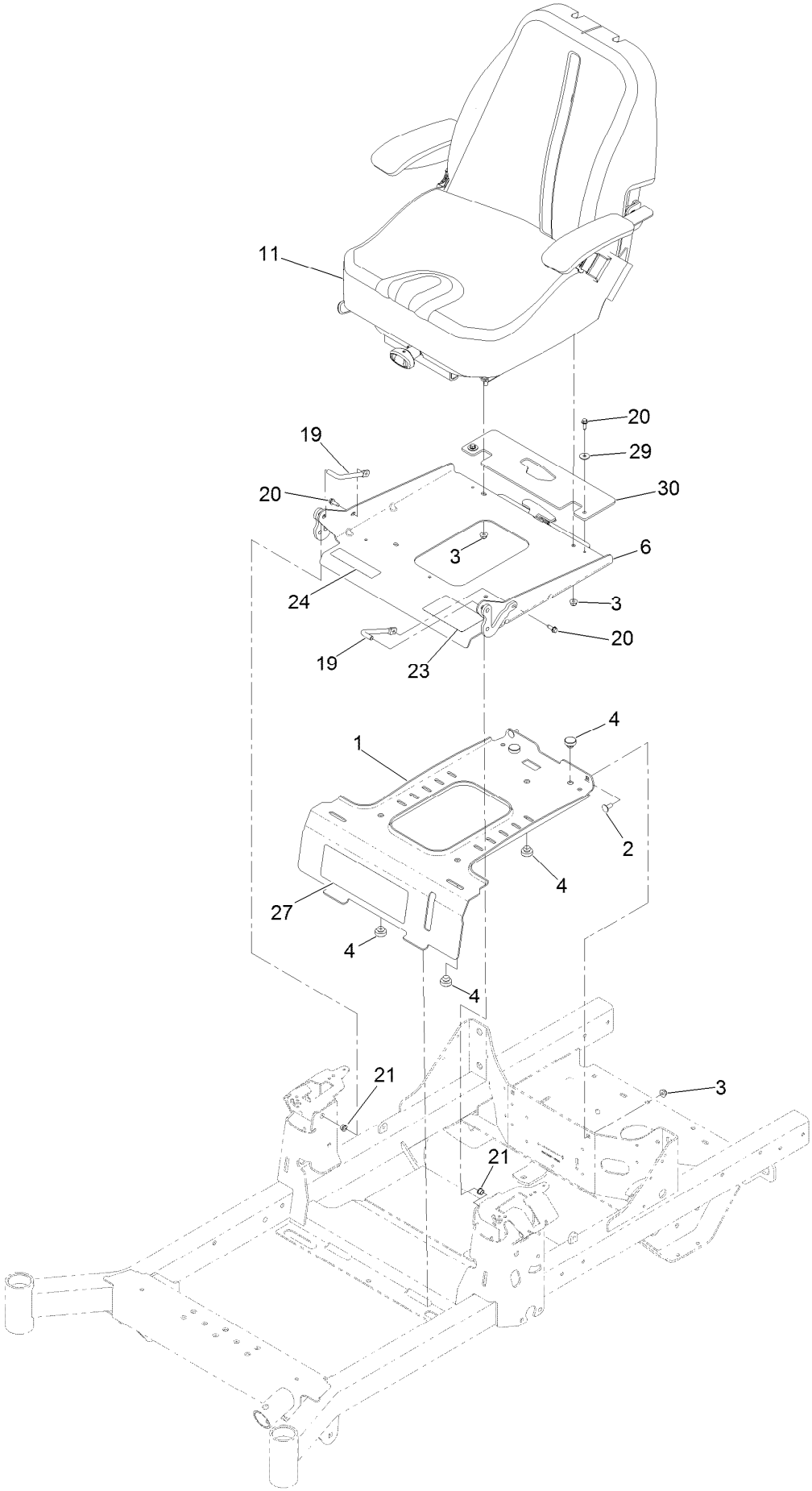

# Seat Mount Assembly (continued)

| Ref. | Part Number | Qty. | Description |
|---|---|---|---|
| 1 | 126-4082-03 | 1 | Plate-Retainer, Tank |
| 2 | 3230-23 | 2 | Screw-CARR |
| 3 | 104-8300 | 6 | Nut-HF, NI |
| 4 | 104-1412 | 5 | Bumper-Rubber |
| 6 | 126-7309 | 1 | Seat Pan And Latch ASM |
| 11 | 126-8293 | 1 | Seat ASM |
| 19 | 126-5914 | 2 | Pin-Pivot, Seat |
| 20 | 32144-44 | 4 | Screw-HWH, Thread Roll |
| 21 | 1-603735 | 2 | Bushing-Flanged |
| 23 | 126-8151 | 1 | Decal-Aid, Service |
| 24 | 126-8161 | 1 | Decal-Latch, Seat |
| 27 | 126-9273 | 1 | Decal |
| 29 | 3256-67 | 2 | Washer |
| 30 | 135-0214 | 1 | Guard-Seat, Rubber |

# Seat Pan and Latch Assembly No. 126-7309

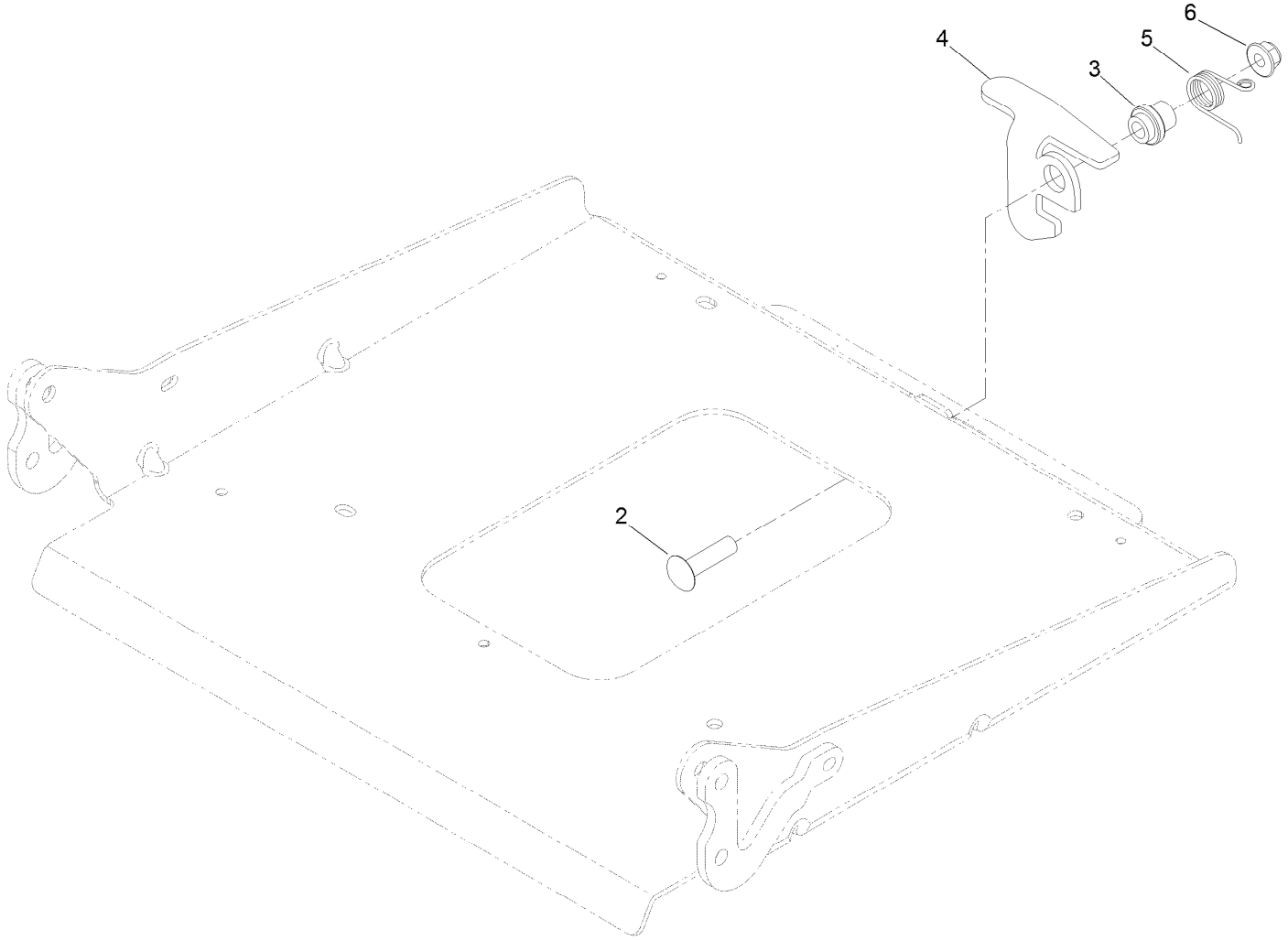

# Seat Pan and Latch Assembly No. 126-7309 (continued)

| Ref. | Part Number | Qty. | Description |
|---|---|---|---|
| 2 | 3231-26 | 1 | Screw-CARR |
| 3 | 107-0075 | 1 | Bushing-Latch, Seat |
| 4 | 126-6739 | 1 | Latch-Catch, Single |
| 5 | 126-8923 | 1 | Spring-Torsion, Latch |
| 6 | 104-8301 | 1 | Nut-HF, NI |

# Seat Assembly No. 126-8293

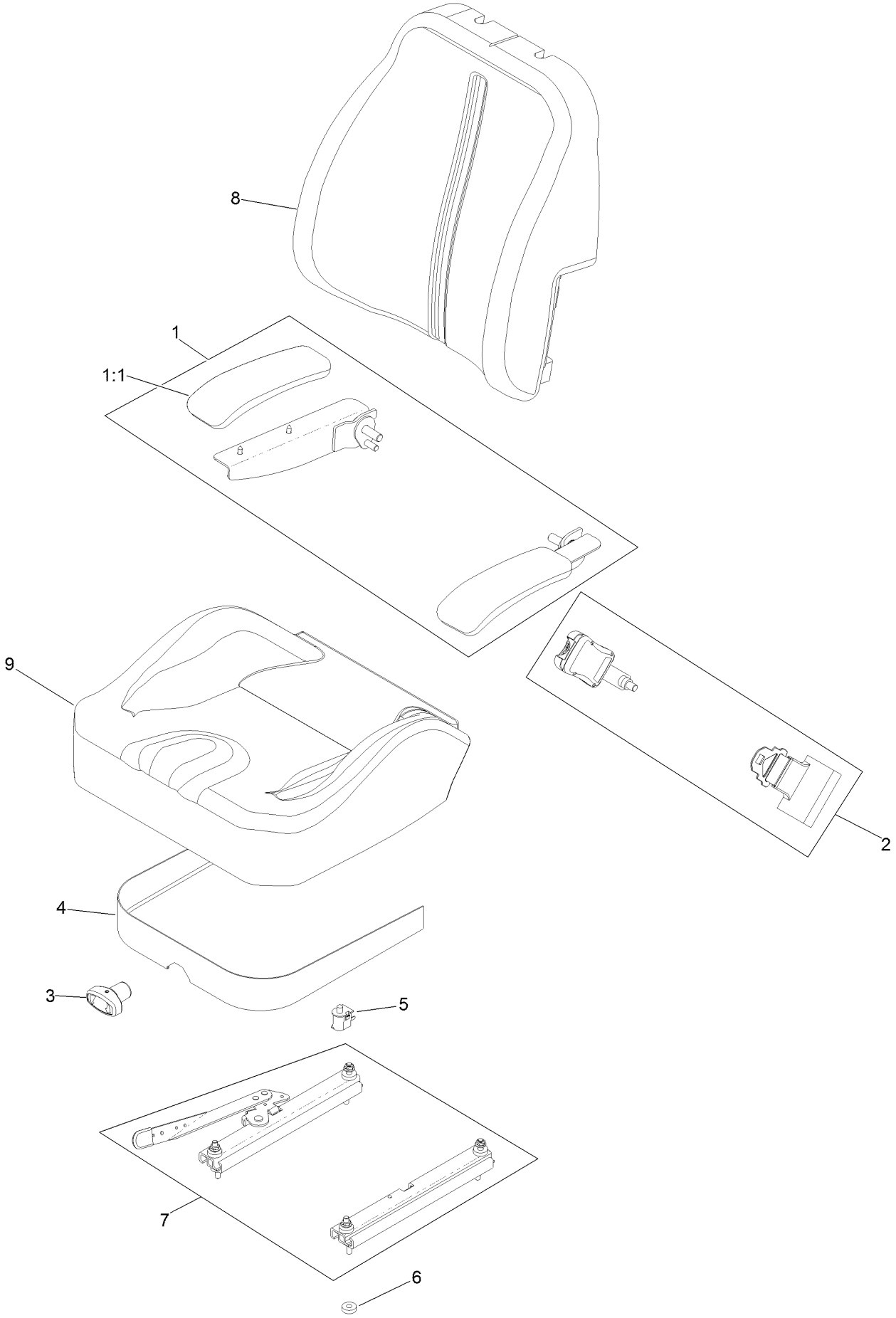

# Seat Assembly No. 126-8293 (continued)

| Ref. | Part Number | Qty. | Description |
|---|---|---|---|
| 1 | 126-2058 | 1 | Armrest Kit |
| 1:1 | 110-4163 | 2 | Cushion-Rest, Arm |
| 2 | 130-0845 | 1 | Seat Belt Kit |
| 3 | 130-0846 | 1 | Knob-Adjuster |
| 4 | 126-3506 | 1 | Cover-Skirt W/Fasteners |
| 5 | 82-2190 | 1 | Switch-Bail |
| 6 | 26-4840 | 4 | Spacer-Pin, Mounting |
| 7 | 130-0844 | 1 | Track Set |
| 8 | 126-8569 | 1 | Cover-Back, Seat |
| 9 | 126-8568 | 1 | Cover-Seat, Bottom |

# Motion Control Assembly

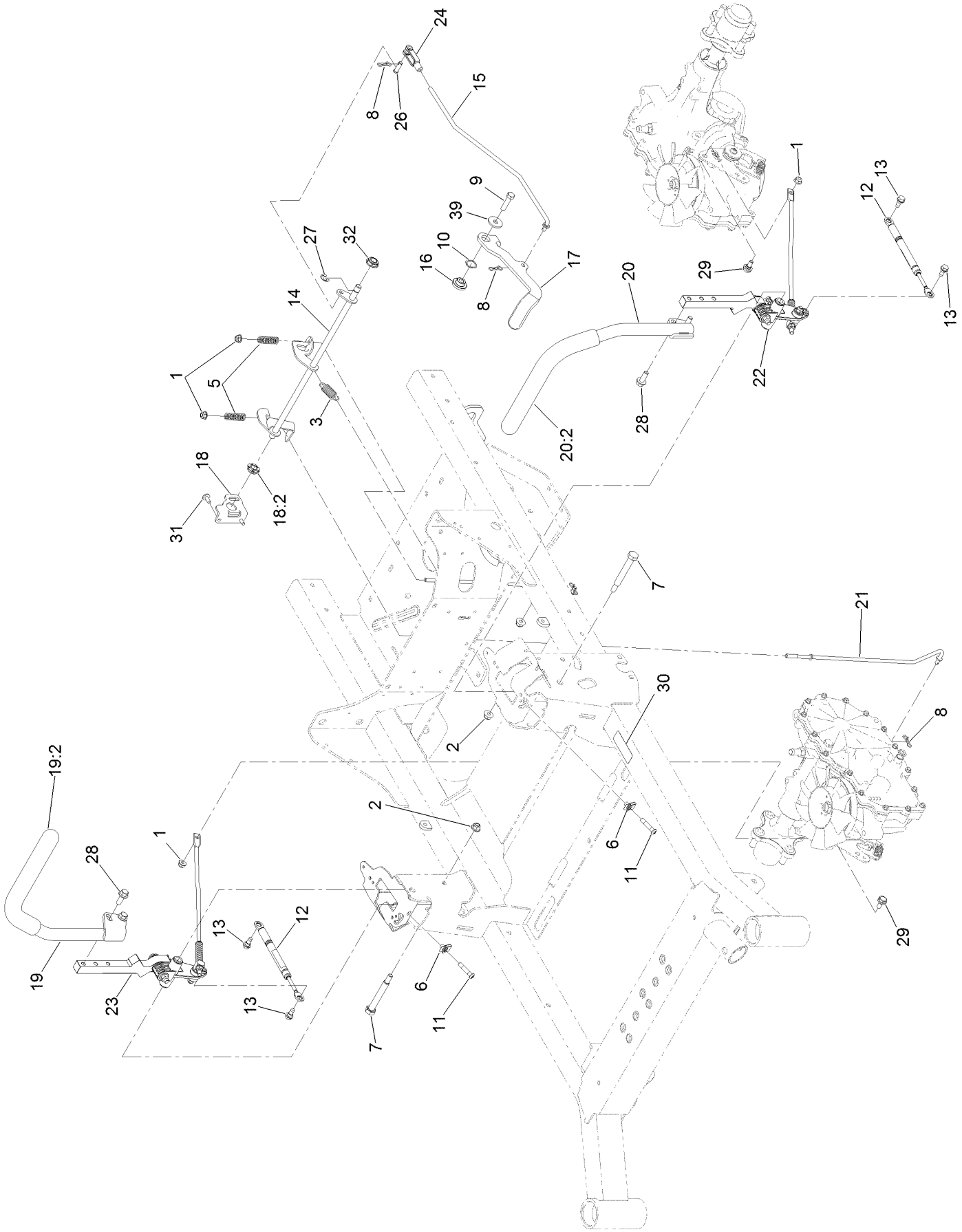

# Motion Control Assembly (continued)

| Ref. | Part Number | Qty. | Description |
|---|---|---|---|
| 1 | 104-8300 | 4 | Nut-HF, NI |
| 2 | 104-8301 | 3 | Nut-HF, NI |
| 3 | 107-1045 | 2 | Spring-Extension |
| 5 | 109-7694 | 2 | Spring-Compression |
| 6 | 112-3306 | 2 | Nut |
| 7 | 115-5099 | 2 | Bolt-Pivot |
| 8 | 119-1415 | 4 | Pin-Cotter, Locking |
| 9 | 323-8 | 1 | Screw-HH |
| 10 | 119-4164 | 1 | Washer-Wave |
| 11 | 126-4299 | 2 | Screw-HSBH |
| 12 | 126-4322 | 2 | Damper |
| 13 | 126-4424 | 4 | Screw-Shoulder |
| 14 | 126-5813 | 1 | Shaft-Brake |
| 15 | 126-5819 | 1 | Linkage-Brake, Upper |
| 16 | 126-5989 | 1 | Pivot-Flange |
| 17 | 126-9490 | 1 | Lever-Brake (With Grip) |
| 18 | 126-6456 | 1 | Bracket-Brake |
| 18:2 | 126-5820 | 1 | Bearing-Spherical |
| 19 | 126-9191 | 1 | RH Control Handle ASM |
| 19:2 | 126-7359 | 1 | Grip |
| 20 | 126-9192 | 1 | LH Control Handle ASM |
| 20:2 | 126-7359 | 1 | Grip |
| 21 | 126-7217 | 2 | Linkage-Brake, Lower |
| 22 | | 1 | LH Motion Control ASM ● |
| 23 | | 1 | RH Motion Control ASM ● |
| 24 | 1-303105 | 1 | Yoke-Adjustable |
| 26 | 1-808280 | 1 | Pin-Clevis |
| 27 | 32120-47 | 1 | Ring-Retaining, External |
| 28 | 3234-42 | 4 | Screw-HHF |
| 29 | 37-8771 | 2 | Bolt-Shoulder |
| 30 | 115-9625 | 1 | Decal-Brake, Parking |
| 31 | 126-6266 | 2 | Screw-Torx |
| 32 | 126-5820 | 1 | Bearing-Spherical |
| 39 | 2844 | 1 | Washer |

● Not serviced separately

# LH Motion Control Assembly

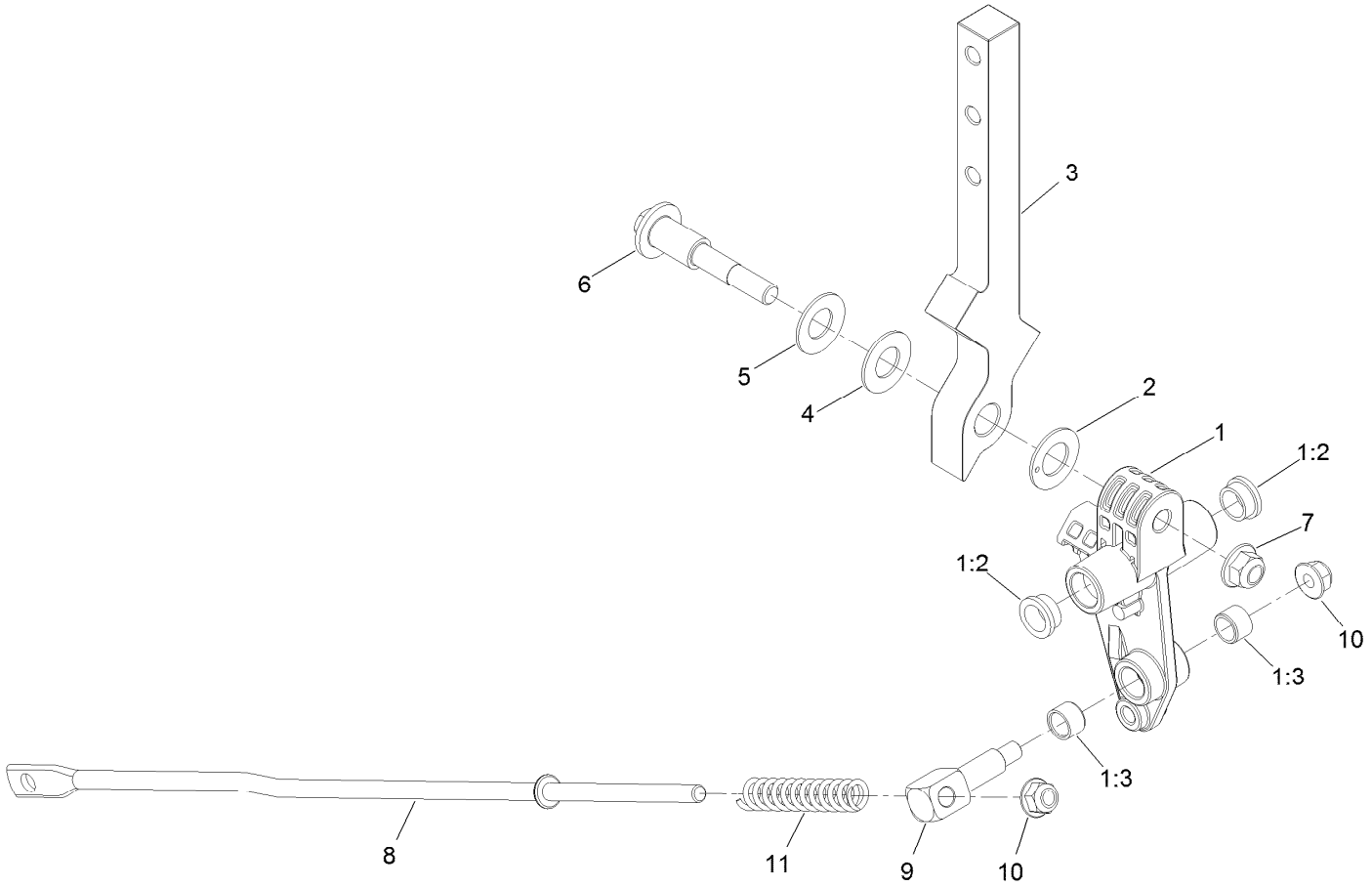

# LH Motion Control Assembly (continued)

| Ref. | Part Number | Qty. | Description |
|---|---|---|---|
| 1 | 126-3773 | 1 | Control Arm ASM |
| 1:2 | 126-8909 | 2 | Bushing |
| 1:3 | 1-413152 | 2 | Bushing-Sleeve |
| 2 | 126-7296 | 1 | Washer-Friction |
| 3 | 126-8182 | 1 | Arm-Control |
| 4 | 117-1240 | 1 | Washer |
| 5 | 119-8925 | 1 | Washer-Belleville |
| 6 | 117-1198 | 1 | Bolt-Pivot |
| 7 | 104-8301 | 1 | Nut-HF, NI |
| 8 | 126-5435 | 1 | Link-Control |
| 9 | 126-5434 | 1 | Swivel |
| 10 | 104-8300 | 2 | Nut-HF, NI |
| 11 | 126-8195 | 1 | Spring-Return, Neutral |

# RH Motion Control Assembly

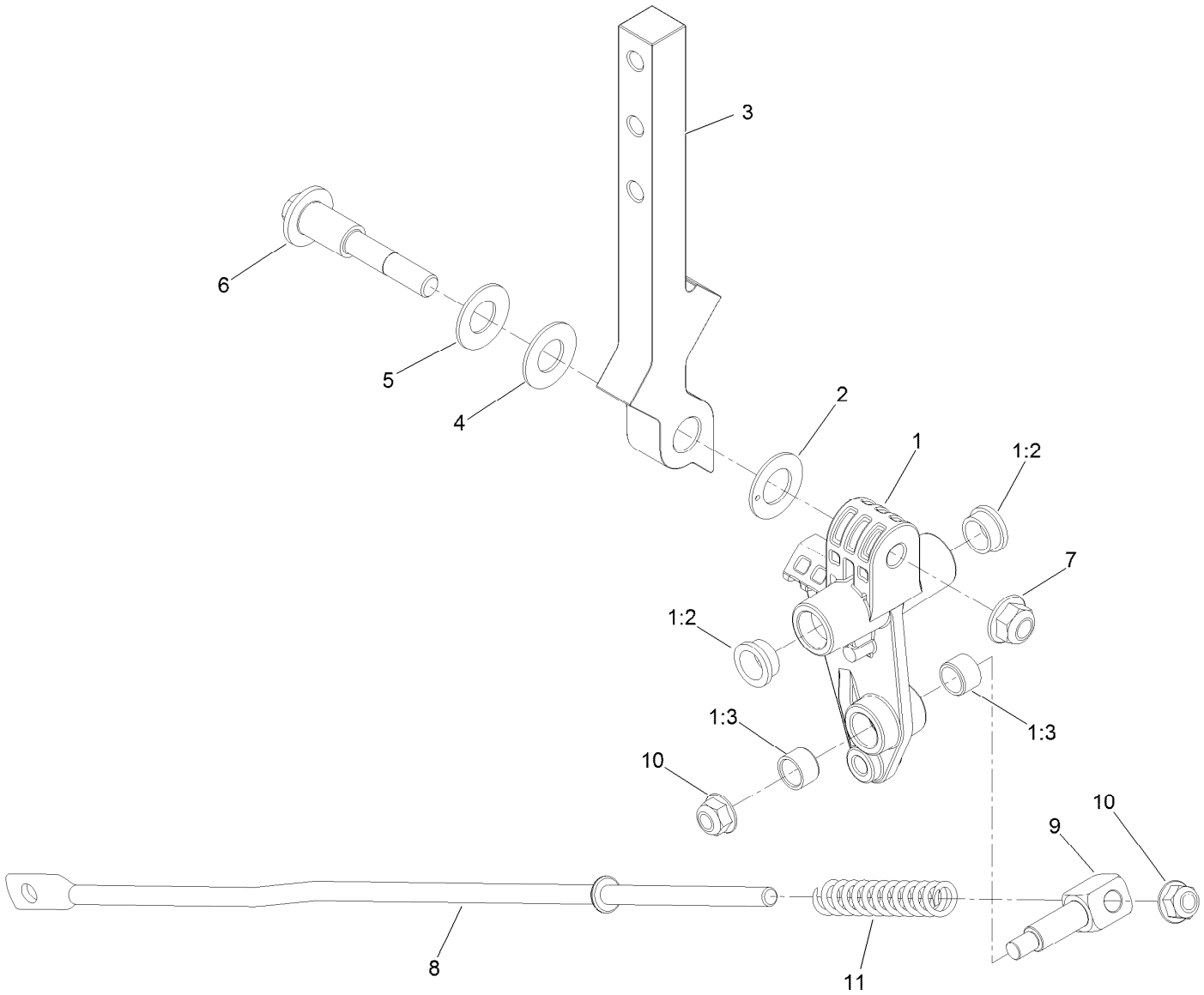

# RH Motion Control Assembly (continued)

| Ref. | Part Number | Qty. | Description |
|---|---|---|---|
| 1 | 126-3773 | 1 | Control Arm ASM |
| 1:2 | 126-8909 | 2 | Bushing |
| 1:3 | 1-413152 | 2 | Bushing-Sleeve |
| 2 | 126-7296 | 1 | Washer-Friction |
| 3 | 126-8182 | 1 | Arm-Control |
| 4 | 117-1240 | 1 | Washer |
| 5 | 119-8925 | 1 | Washer-Belleville |
| 6 | 117-1198 | 1 | Bolt-Pivot |
| 7 | 104-8301 | 1 | Nut-HF, NI |
| 8 | 126-5435 | 1 | Link-Control |
| 9 | 126-5434 | 1 | Swivel |
| 10 | 104-8300 | 2 | Nut-HF, NI |
| 11 | 126-8195 | 1 | Spring-Return, Neutral |

# Electrical Assembly

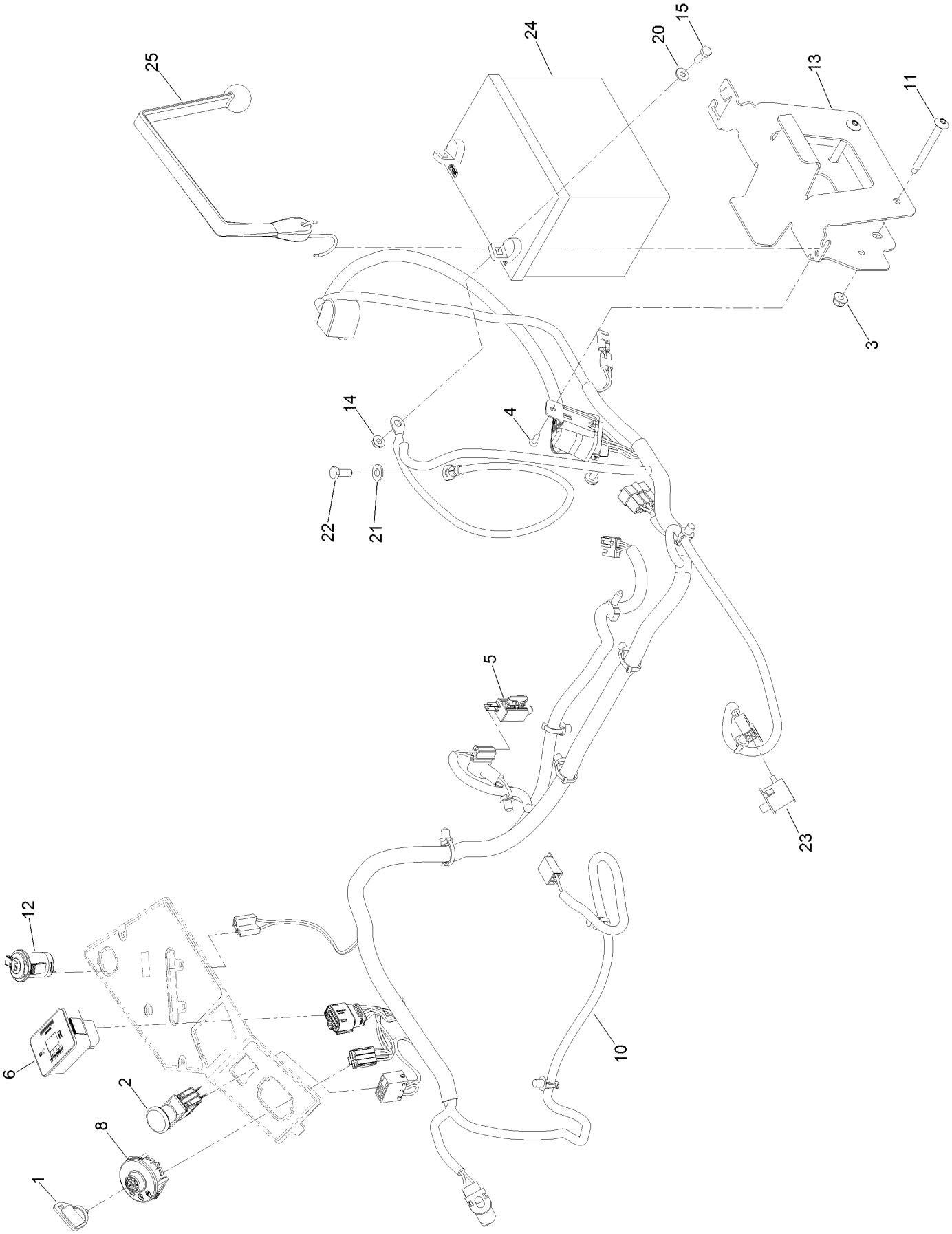

# Electrical Assembly (continued)

| Ref. | Part Number | Qty. | Description |
|---|---|---|---|
| 1 | 63-8360 | 1 | Key-Ignition |
| 2 | 103-5221 | 1 | Switch-PTO |
| 3 | 104-8300 | 2 | Nut-HF, NI |
| 4 | 105-6849 | 1 | Screw-Forming, Thread |
| 5 | 110-6765 | 1 | Switch |
| 6 | 116-5609 | 1 | Module ASM |
| 8 | 117-2221 | 1 | Switch-Ignition |
| 10 | 126-5803 | 1 | Harness-Wire ▲ |
| 11 | 126-6267 | 2 | Screw-Torx |
| 12 | 126-6499 | 1 | Port-Power, 12V |
| 13 | 126-6725-03 | 1 | Tray-Battery |
| 14 | 32128-33 | 2 | Nut-HF |
| 15 | 321-4 | 2 | Screw-HH |
| 20 | 3256-22 | 2 | Washer-Flat |
| 21 | 33094-00 | 1 | Washer-Plain |
| 22 | 33114-020 | 1 | Screw-HH |
| 23 | 82-2190 | 2 | Switch-Bail |
| 24 | | 1 | Battery (300 CCA, Wet) ●■ |
| 25 | 126-7627 | 1 | Strap-Bungee |

● Obtain locally.

■ Not serviced separately

▲ Use dielectric grease on all unsealed connectors and terminals only. Do not apply in sealed connectors.

# Wire Harness Assembly No. 126-5803

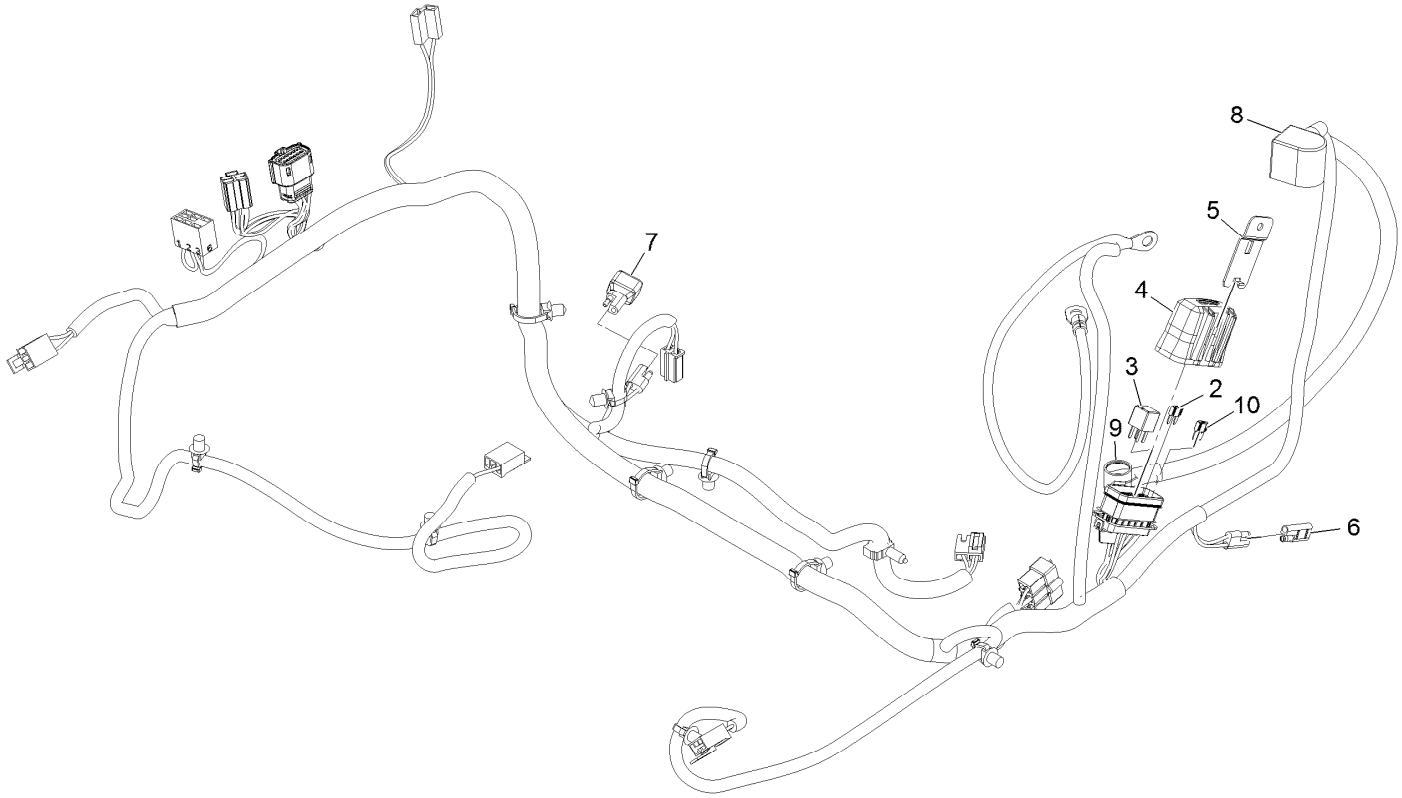

# Wire Harness Assembly No. 126-5803 (continued)

| Ref. | Part Number | Qty. | Description |
|---|---|---|---|
| 2 | 121-8868 | 1 | Fuse-Mini Blade, 20 Amp |
| 3 | 126-3991 | 1 | Relay-Micro |
| 4 | 32180-176 | 1 | Cover-Block, Fuse |
| 5 | 32180-177 | 1 | Clip-Mounting |
| 6 | 116-0053 | 1 | Cap-Plug |
| 7 | 103-3895 | 1 | Diode |
| 8 | 126-8876 | 1 | Insulator-Battery |
| 9 | 1-543393 | 1 | Insulator-Solenoid |
| 10 | 121-8867 | 1 | Fuse-Mini Blade, 15 Amp |

# Deck Lift Assembly

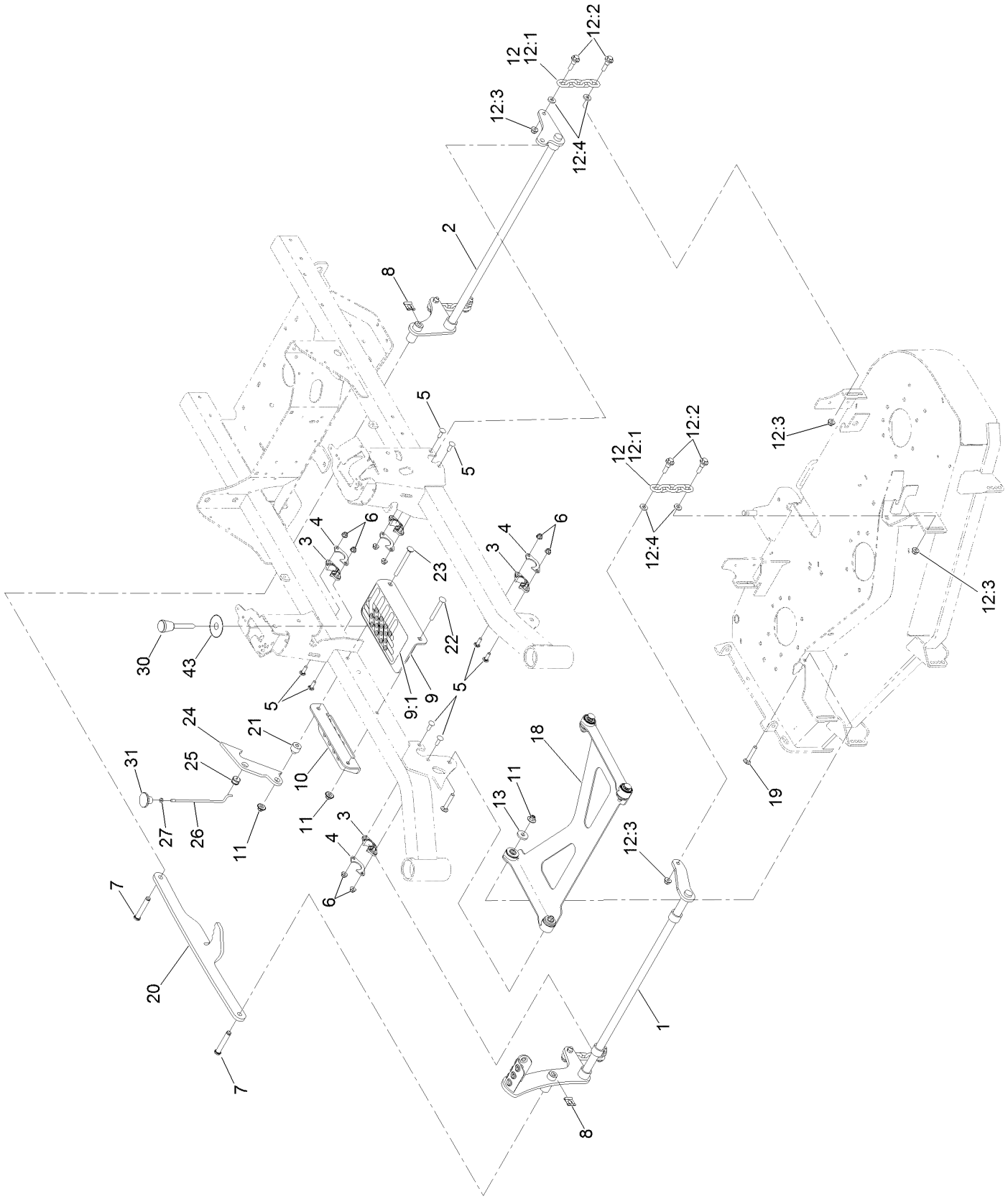

# Deck Lift Assembly (continued)

| Ref. | Part Number | Qty. | Description |
|---|---|---|---|
| 1 | 126-3342-03 | 1 | Shaft-Lift, Deck |
| 2 | 126-3343-03 | 1 | Shaft-Lift, Deck (Rear) |
| 3 | 115-5065 | 4 | Bushing-Flange |
| 4 | 116-2887 | 4 | Gusset-Lift, Deck |
| 5 | 3230-22 | 8 | Screw-CARR |
| 6 | 104-8300 | 8 | Nut-HF, NI |
| 7 | 126-9181 | 2 | Pin-Clevis |
| 8 | 95-4064 | 2 | Clip-Pin |
| 9 | 126-4535 | 1 | Bracket ASM |
| 9:1 | 126-4784 | 1 | Decal-HOC |
| 10 | 126-4640-03 | 1 | Angle-HOC, Lower |
| 11 | 109-6658 | 4 | Nut-Flange, NI |
| 12 | 126-8877 | 4 | Deck Chain ASM |
| 12:1 | 1-633447 | 1 | Chain-Lift, Deck |
| 12:2 | 130-0742 | 2 | Bolt-Shoulder |
| 12:3 | 104-8301 | 2 | Nut-HF, NI |
| 12:4 | 43-0940 | 2 | Spacer |
| 13 | 1-373034 | 2 | Washer |
| 18 | 126-8365 | 1 | Deck Strut ASM |
| 19 | 3231-7 | 2 | Screw-CARR |
| 20 | 126-4639-03 | 1 | Link-Lift |
| 21 | 126-5221 | 1 | Spacer-Stepped |
| 22 | 3231-42 | 1 | Screw-CARR |
| 23 | 3231-37 | 1 | Screw-CARR |
| 24 | 126-5222 | 1 | Plate-Lock, Transport |
| 25 | 126-5593 | 1 | Grommet |
| 26 | 126-5223 | 1 | Rod-Lock, Transport |
| 27 | 3218-1 | 1 | Nut-Jam |
| 30 | 126-5401 | 1 | Pin-HOC |
| 31 | 126-7019 | 1 | Knob |
| 43 | 126-8353 | 1 | Tag-Retention, Magnetic |

# Deck Strut Assembly No. 126-8365

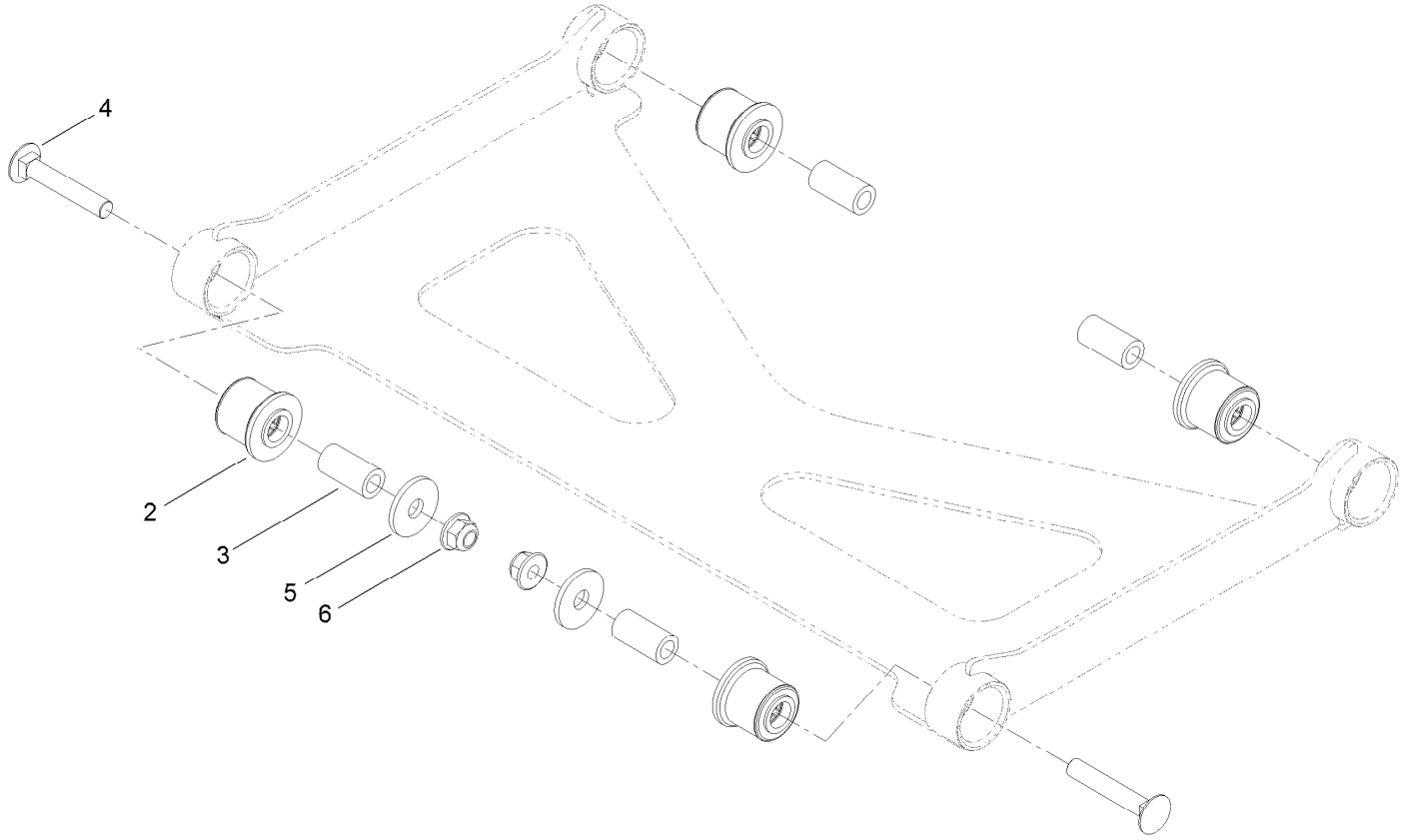

# Deck Strut Assembly No. 126-8365 (continued)

| Ref. | Part Number | Qty. | Description |
|---|---|---|---|
| 2 | 126-8360 | 4 | Bushing-Rubber, Suspension |
| 3 | 108-6544 | 4 | Spacer |
| 4 | 3231-7 | 2 | Screw-CARR |
| 5 | 2844 | 2 | Washer |
| 6 | 104-8301 | 2 | Nut-HF, NI |

# Engine Assembly

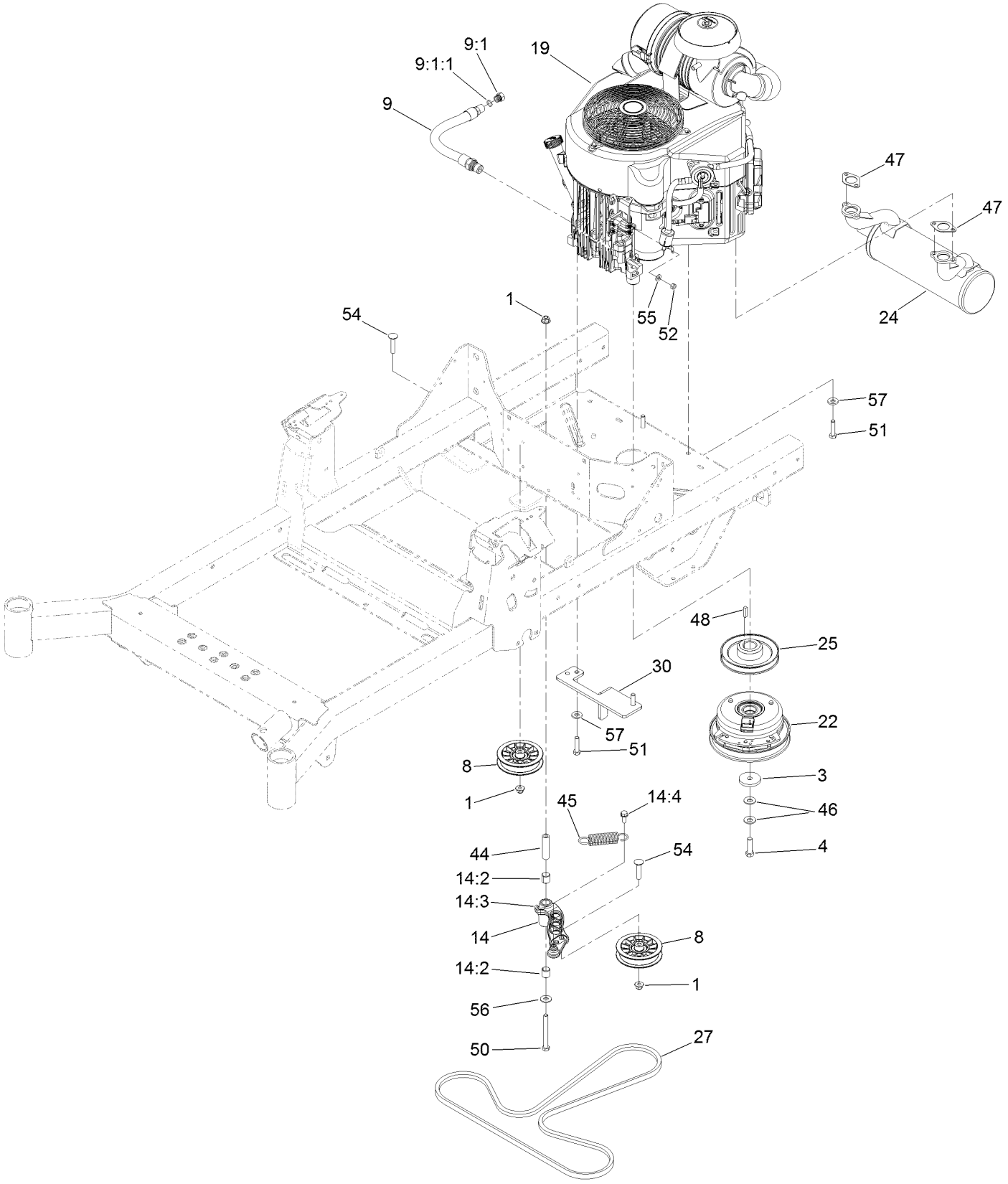

# Engine Assembly (continued)

| Ref. | Part Number | Qty. | Description |
|---|---|---|---|
| 1 | 104-8301 | 3 | Nut-HF, NI |
| 3 | 109-6919 | 1 | Washer-Clutch |
| 4 | 109-9761 | 1 | Screw-HH ❍ |
| 8 | 116-2456 | 2 | Pulley-Flat |
| 9 | 116-4924 | 1 | Engine Oil Drain Hose ASM ▲ |
| 9:1 | 353-508 | 1 | Plug-HH ■ |
| 9:1:1 | 237-42 | 1 | O-Ring |
| 14 | 126-0973 | 1 | Idler Arm ASM |
| 14:2 | 1-513034 | 2 | Sleeve-Bearing |
| 14:3 | 302-40 | 1 | Fitting-Grease, 90 DEG |
| 14:4 | 32144-11 | 1 | Screw-HWHTF |
| 19 | | 1 | Engine-Kawasaki, Fx691V ◆❑ |
| 19:1 | | 1 | Kawasaki 49065-7007 Engine Oil Filter ❑●◆ |
| 19:2 | | 1 | Kawasaki 49019-7005 Fuel Filter ❑●◆ |
| 19:3 | | 1 | Kawasaki 11013-7045 Safety Filter ❑●◆ |
| 19:4 | | 1 | Kawasaki 11013-7044 Engine Air Filter ❑●◆ |
| 22 | 126-4324 | 1 | Clutch |
| 24 | 126-4360 | 1 | Muffler |
| 25 | 126-5358 | 1 | Sheave (W/Hub) |
| 27 | 126-5993 | 1 | Belt-V |
| 30 | 126-6687-03 | 1 | Anchor-Clutch |
| 44 | 1-603384 | 1 | Bushing-Pivot, Idler |
| 45 | 1-603402 | 1 | Spring-Extension |
| 46 | 1-603610 | 2 | Washer-Spring |
| 47 | 1-653313 | 2 | Gasket-Exhaust |
| 48 | 1-807259 | 1 | Key |
| 50 | 323-15 | 1 | Screw-HH |
| 51 | 323-8 | 4 | Screw-HH |
| 52 | 3217-5 | 1 | Nut-Hex |
| 54 | 3231-29 | 2 | Screw-CARR |
| 55 | 3256-22 | 1 | Washer-Flat |
| 56 | 3256-4 | 1 | Washer-Flat |
| 57 | 98-5975 | 4 | Washer-Belleville |

● Not illustrated
▲ Torque to 23-29 ft-lb
❑ Obtain parts from www.kawpowerepc.com
❍ Use Pro-Lock, Nut Type (P/N 1-840022, .5ml tube) on threads.
■ Torque to 24-26 ft-lb
◆ Not serviced separately

# Deck Assembly

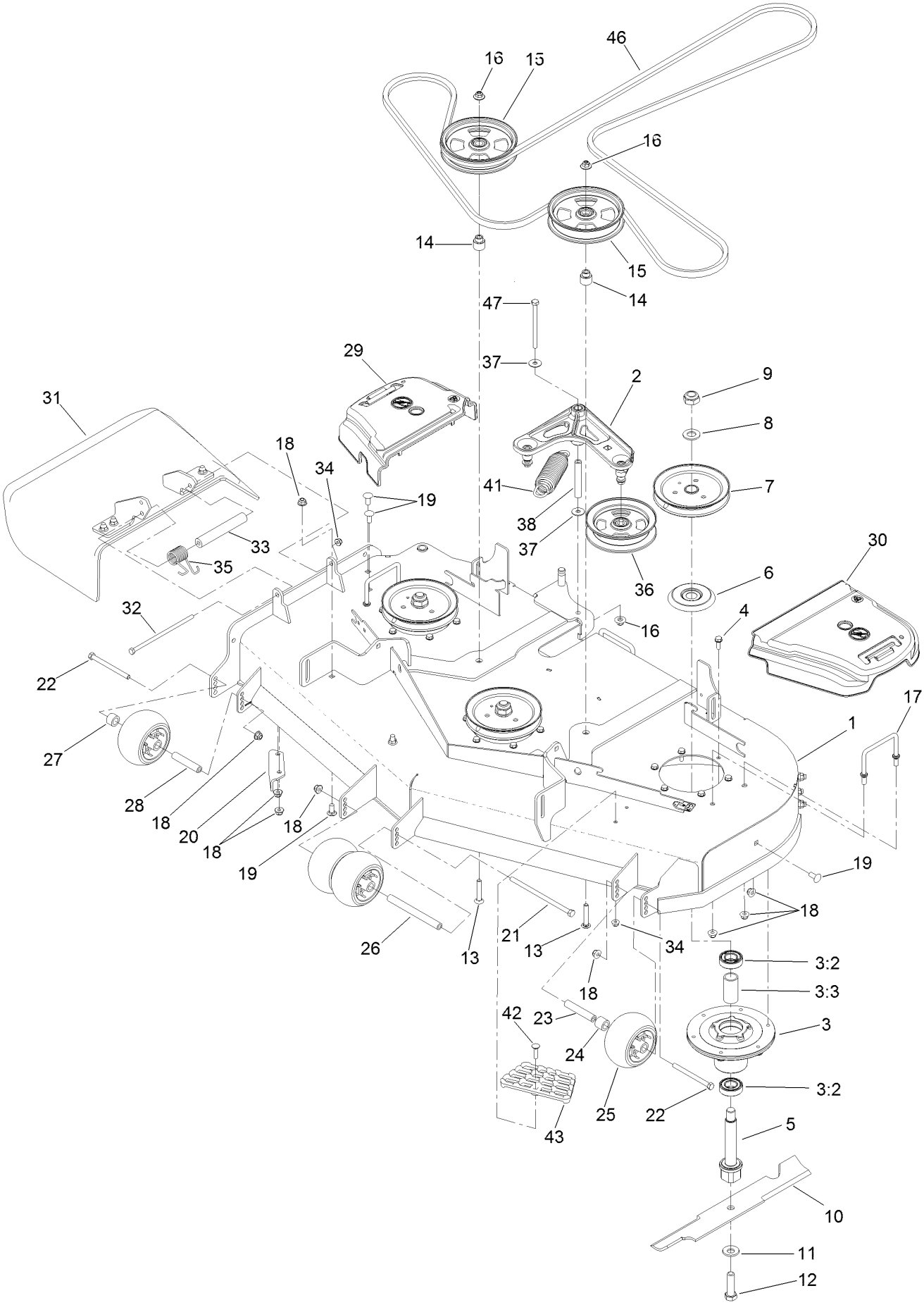

# Deck Assembly (continued)

| Ref. | Part Number | Qty. | Description |
|---|---|---|---|
| 1 | 127-6797 | 1 | Deck Decal ASM |
| 2 | 126-0976 | 1 | Idler Arm ASM |
| 3 | 120-5477 | 3 | Spindle ASM |
| 3:2 | 116-0720 | 2 | Bearing-Ball |
| 3:3 | 115-2641 | 1 | Spacer-Bearing |
| 4 | 32144-41 | 18 | Screw-Taptite |
| 5 | 133-2126 | 3 | Shaft-Spindle |
| 6 | 117-7210 | 3 | Shield-Bearing |
| 7 | 120-7855 | 3 | Pulley |
| 8 | 92-5836 | 3 | Washer |
| 9 | 3296-67 | 4 | Nut-Lock, NI |
| 10 | 133-2134 | 3 | Blade-Rotary, 18.0In (Hi Flow) |
| 11 | 125-1736 | 3 | Washer-Belleville |
| 12 | 51-4060 | 3 | Screw-Blade |
| 13 | 3231-40 | 2 | Bolt-CARR, Short Neck |
| 14 | 126-7684 | 2 | Bushing-Idler |
| 15 | 136-5404 | 2 | Pulley-Idler, Flat |
| 16 | 109-6658 | 3 | Nut-Flange, NI |
| 17 | 109-6982 | 2 | Wireform-Cover |
| 18 | 104-8301 | 16 | Nut-HF, NI |
| 19 | 3231-27 | 9 | Screw-CARR |
| 20 | 107-8541-01 | 1 | Baffle-Discharge |
| 21 | 108-5388 | 1 | Screw-HH |
| 22 | 323-23 | 2 | Screw-HH |
| 23 | 98-7912 | 1 | Tube-Spanner |
| 24 | 98-7913 | 1 | Tube-Spacer |
| 25 | 1-603299 | 4 | Roller-Scalp, Anti |
| 26 | 98-5967 | 1 | Spacer-Wheel |
| 27 | 133-2128 | 1 | Tube-Spacer |
| 28 | 133-2129 | 1 | Tube-Shafting |
| 29 | 109-6935 | 1 | Cover-Belt, RH |
| 30 | 109-6936 | 1 | Cover-Belt, LH |
| 31 | 108-2792 | 1 | Rubber Deflector ASM |
| 32 | 322-50 | 1 | Screw-HH |
| 33 | 105-4622 | 1 | Spacer |
| 34 | 104-8300 | 2 | Nut-HF, NI |
| 35 | 108-4052 | 1 | Spring-Torsion |
| 36 | 132-9425 | 1 | Pulley-Idler, Flat |
| 37 | 52-2860 | 2 | Washer |
| 38 | 116-5111 | 1 | Bushing |
| 41 | 116-6317 | 1 | Spring-Extension |
| 42 | 3230-3 | 1 | Screw-CARR |
| 43 | 126-4781-03 | 1 | Step-Deck |
| 46 | 133-2141 | 1 | Belt-V |
| 47 | 323-38 | 1 | Screw-HH |

# Deck Decal Assembly No. 127-6797

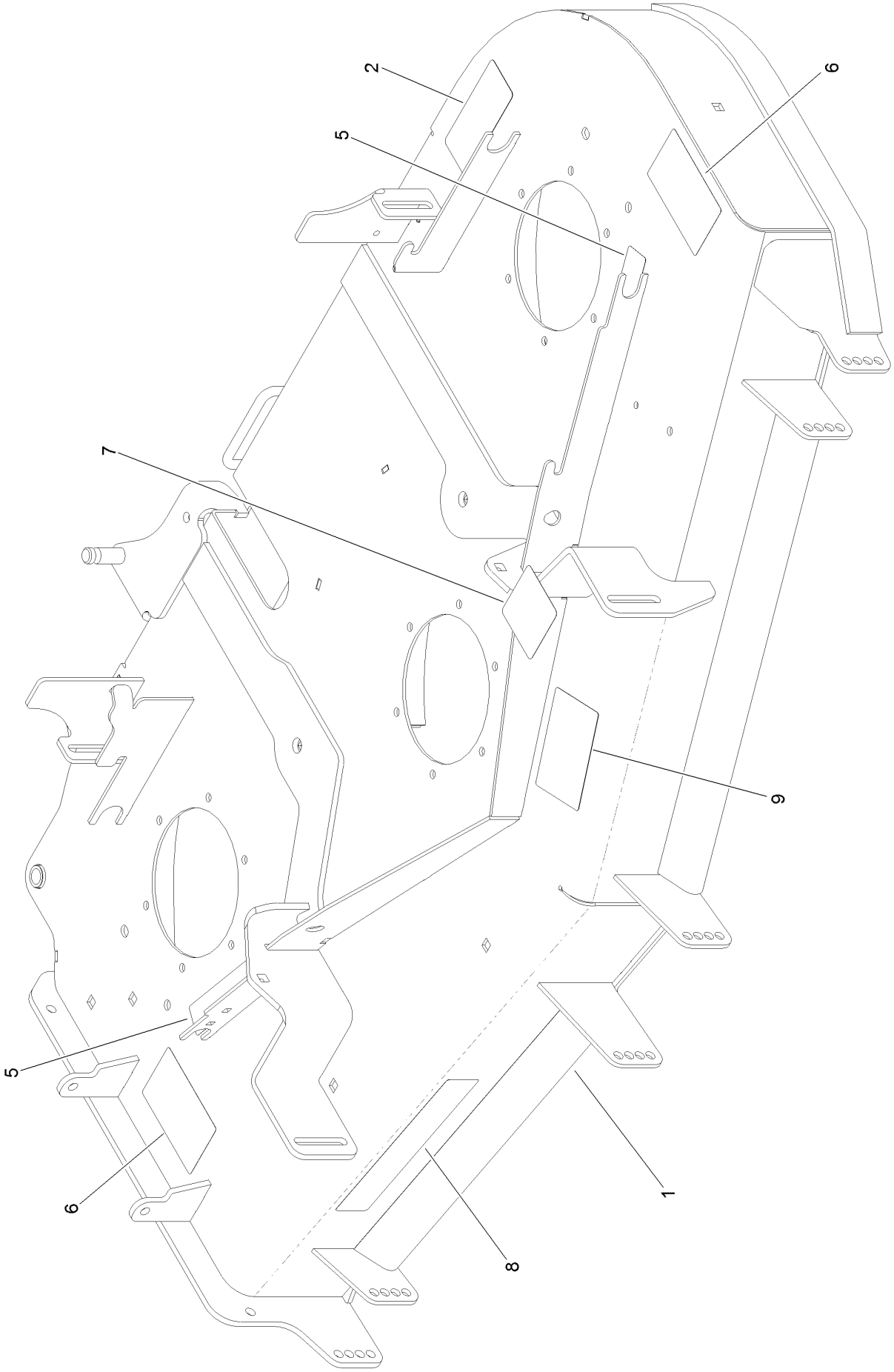

# Deck Decal Assembly No. 127-6797 (continued)

| Ref. | Part Number | Qty. | Description |
|---|---|---|---|
| 1 | | 1 | Deck Decal ASM ● |
| 2 | 93-7818 | 1 | Decal-Torque, Blade Bolt |
| 5 | 112-9028 | 2 | Decal-Cover, Missing |
| 6 | 117-3848 | 2 | Decal-Danger |
| 7 | 109-6035 | 1 | Decal-Routing, Belt |
| 8 | 121-3205 | 1 | Decal |
| 9 | 127-0326 | 1 | Decal-Scalp, Anti |

● Not serviced separately

# Idler Arm Assembly No. 126-0976

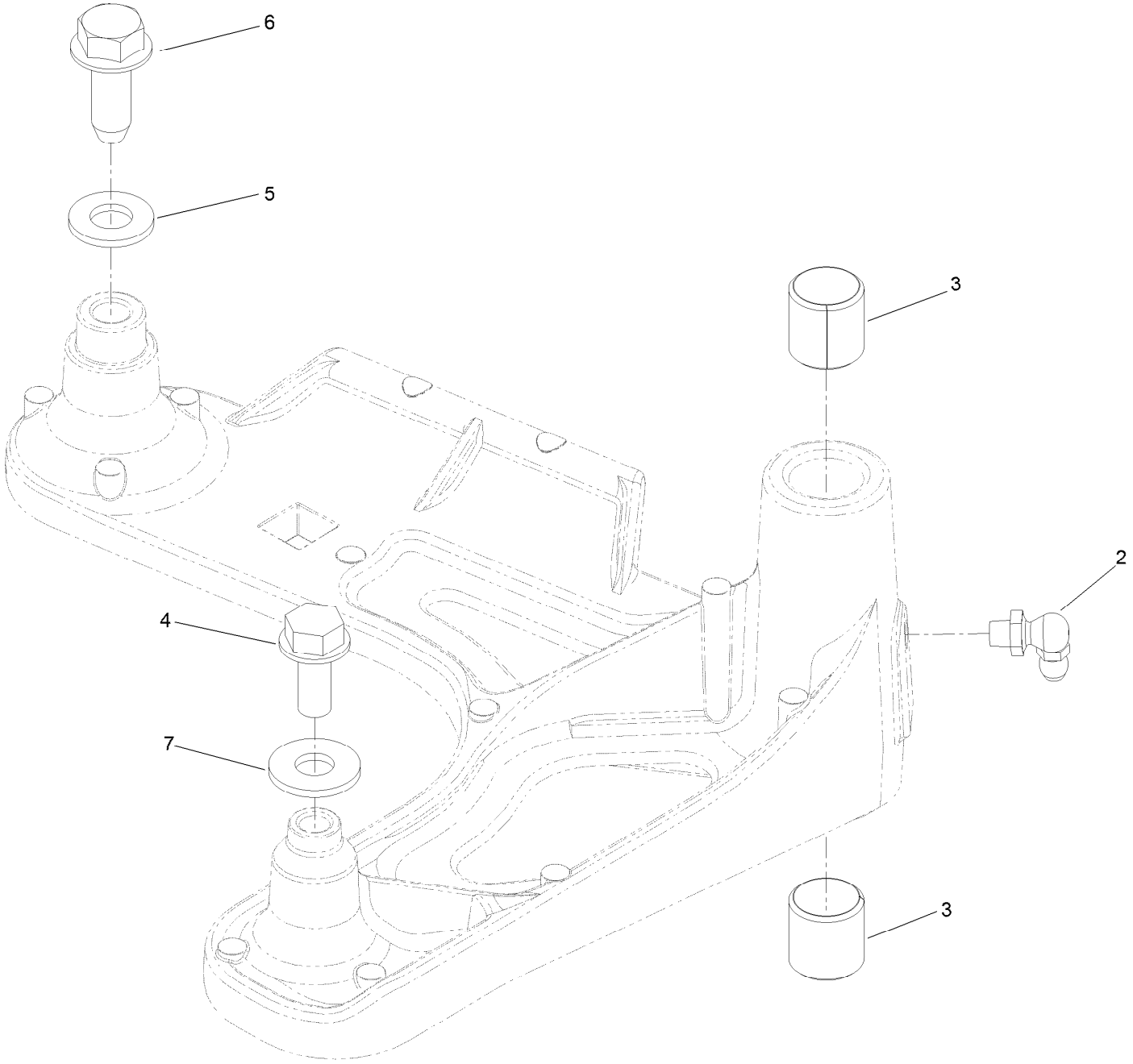

# Idler Arm Assembly No. 126-0976 (continued)

| Ref. | Part Number | Qty. | Description |
|---|---|---|---|
| 2 | 302-40 | 1 | Fitting-Grease, 90 DEG |
| 3 | 1-513034 | 2 | Sleeve-Bearing |
| 4 | 32144-11 | 1 | Screw-HWHTF |
| 5 | 3256-24 | 1 | Washer-Flat |
| 6 | 126-1696 | 1 | Screw-Forming, Thread |
| 7 | 3256-3 | 1 | Washer-Flat |

# Rubber Deflector Assembly No. 108-2792

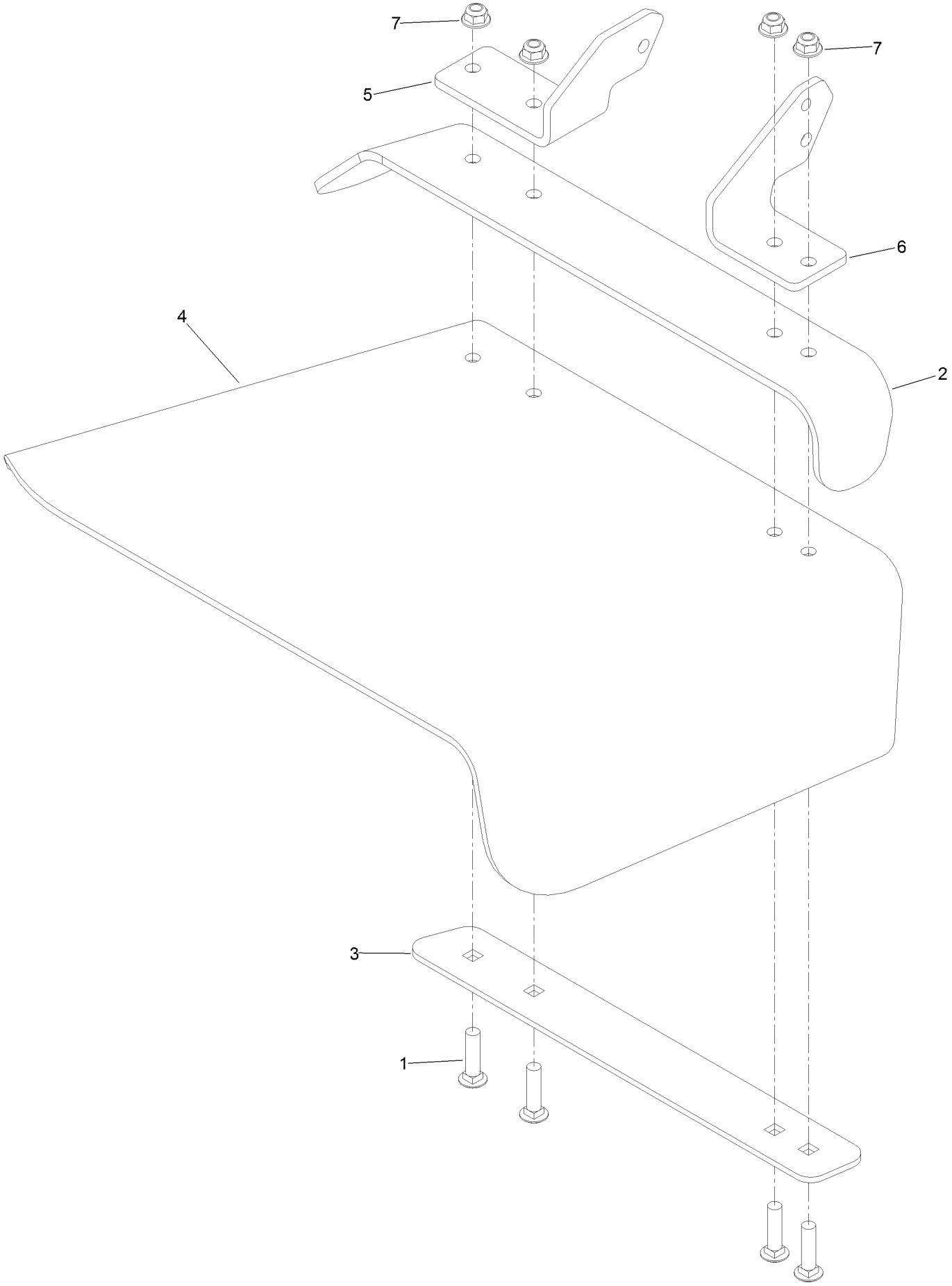

# Rubber Deflector Assembly No. 108-2792 (continued)

| Ref. | Part Number | Qty. | Description |
|---|---|---|---|
| 1 | 3231-4 | 4 | Screw-CARR |
| 2 | 106-3246-01 | 1 | Deflector |
| 3 | 106-3248-03 | 1 | Strap-Discharge |
| 4 | 108-5029 | 1 | Deflector-Rubber |
| 5 | 108-4059-01 | 1 | Plate-Hinge, Rear |
| 6 | 106-3253-01 | 1 | Plate-Hinge, Front |
| 7 | 104-8301 | 4 | Nut-HF, NI |

# Attachments and Accessories

## For 74471 52in TITAN HD 2500 Series Riding Mower

| Product Name | Model/Part |
|---|---|
| Hypr-Oil 500 (quart) | 114-4713 |
| Hypr-Oil 500 (gallon) | 114-4714 |
| Hypr-Oil 500-5 (5 gallon) | 114-4715 |
| Toro Hydro Kit | 121-3783 |
| LED Light Kit | 126-5382 |
| Front Bucket Bracket Kit | 126-7011 |
| Striper Kit | 126-7882 |
| Sunshade Kit | 126-8077 |
| Cover-hitch | 126-8299 |
| Trash Container Kit | 126-8379 |
| Weight Caster Kit | 126-8639 |
| Flat Free Wheel and Bearing Kit | 126-9368 |
| Jack Kit | 127-6666 |
| MVP Belt and Blade Kit | 127-6791 |
| Engine Maint Kit-kawasaki Fx | 133-1307 |
| Hi-Back Seat Cover | 133-1308 |
| Blade-Rotary, 18.0in (hi Flow) | 133-2134 |
| Blade-Rotary, Atomic 18.0 | 133-2159 |
| Blade-Rotary, Recycling 18.0in | 133-2162 |
| 52in Recycler Kit | 133-2167 |
| Blade (6 Pack) 18in Hi Flow | 133-2175 |
| Blade (6 Pack) 18in Recycle | 133-2178 |
| Blade (6 Pack) 18in Atomic | 133-2181 |
| 5 Gallon Bucket | 133-2533 |
| Trimmer Mount Kit | 136-1682 |
| ROPS Pin Kit | 136-1683 |
| Bucket Mount Kit | 136-9045 |
| Universal Mount Kit Mower | 136-9046 |
| Titan Hd Triple Threat Attachment Kit | 136-9047 |
| Toro Deluxe Rider Cover | 490-7319 |
| Heavy Duty Bagger Kit | 78431 |
| 52in Completion Kit (Heavy duty Bagger) | 78437 |
| Standard Ez Vac Bagger | 78481 |
| 52in Completion Kit (Standard Bagger) | 78487 |

**Notes:**

**Notes:**

**Notes:**

TORO®

Count on it.