Form No. 3421-888 Rev A

Trans Pro 100 Tow-Behind Trailer

Model No. 04240—Serial No. 401379001 and Up

Installation Instructions

Safety

Safety and Instructional Decals

Safety decals and instructions are easily visible to the operator and are located near any area of potential danger. Replace any decal that is damaged or missing.

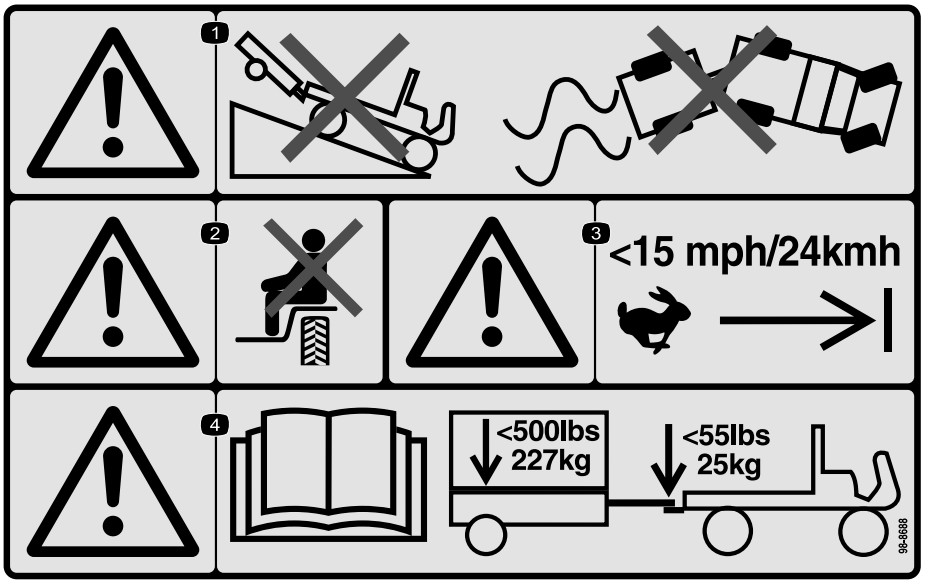

decal98-8688

98-8688

1. Warning—do not drive the vehicle with a trailer down a hill; do not lose control of the vehicle and trailer.
2. Warning—do not carry passengers.
3. Warning—do not exceed 24 km/h (15 mph).
4. Warning—read the *Operator's Manual*; the maximum trailer weight is 227 kg (500 lb) and the maximum tongue weight is 25 kg (55 lb).

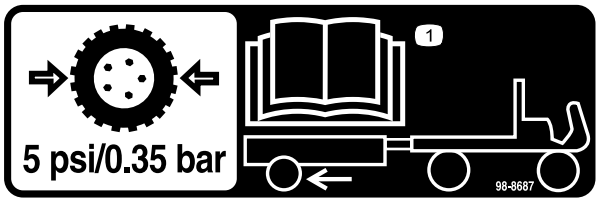

decal98-8687

98-8687

1. The trailer tires should be inflated to 0.35 bar (5 psi); read the *Operator's Manual*.

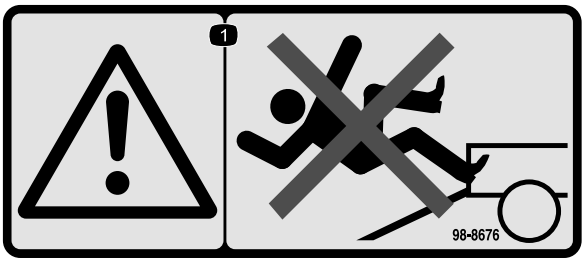

decal98-8676

98-8676

1. Warning—do not climb the ramp, you could slip and fall.

© 2018— The Toro® Company
8111 Lyndale Avenue South
Bloomington, MN 55420

Register at www.Toro.com.

CE

Original Instructions (EN)
Printed in the USA
All Rights Reserved

3421-888 A

Installation

Assembling the Trailer

1. Mount the tongue assembly to the mounting bracket on the underside of the trailer bed with 2 bolts (3/8 x 2-3/4 inches) and 2 locknuts (Figure 1).

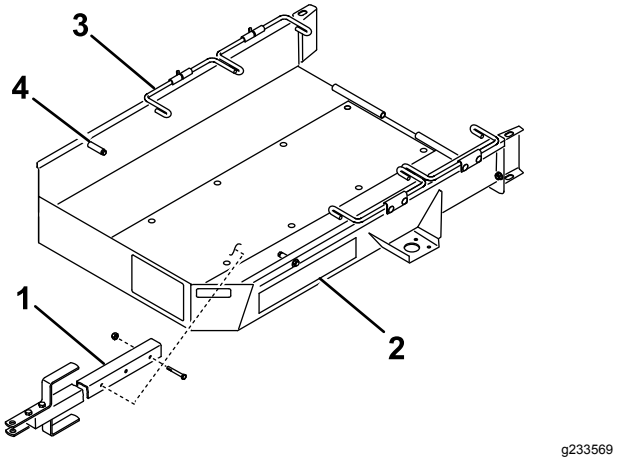

Figure 1

1. Tongue assembly	3. Wheel rod
2. Trailer bed	4. Stop

2. Using the 4 carriage bolts and 4 locknuts, mount an axle to the top side of the mounting brackets on each side of the trailer bed as shown in Figure 2.

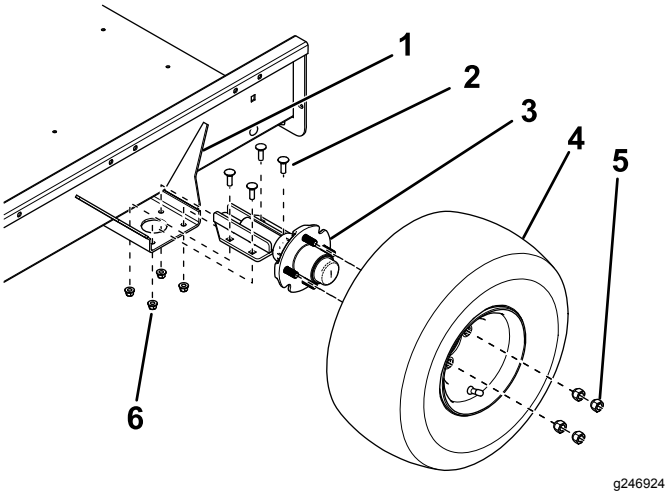

Figure 2

1. Mounting bracket	4. Wheel assembly
2. Carriage bolt	5. Lug nut
3. Axle	6. Locknut

3. Mount a wheel assembly to each axle hub with 4 lug nuts (Figure 2) and tighten the nuts to 80 ft-lb (108.5 N·m).
4. Deflate the tires to 5 psi (34 kPa).
5. Mount the trailer ramp to the rear of the trailer bed with the hinge rod and 2 cotter pins (Figure 3).

   Note: Apply a light coating of grease to the hinge rod prior to assembly.

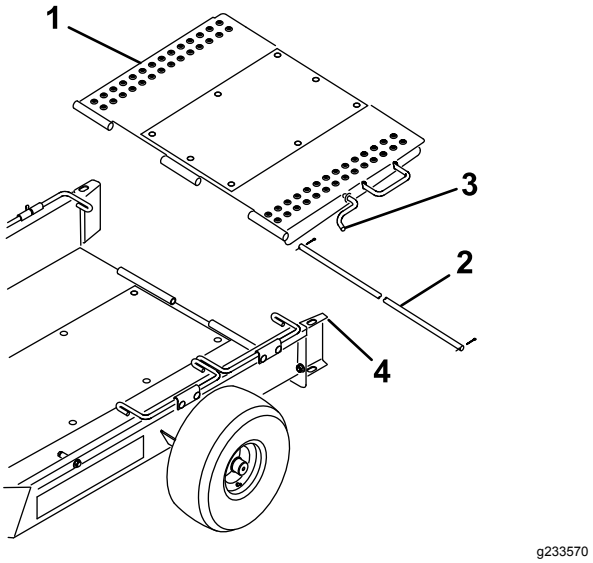

Figure 3

1. Trailer ramp	3. Ramp latch
2. Hinge rod	4. Wheel guide

6. Pivot the trailer ramp upward and hook the ramp latch into the hole in the top of the wheel guide (Figure 3).

Adjusting the Wheel Toe-in

To prevent premature wear of the tires, the wheels should have 0 to 3 mm (0 to 1/8 inch) toe-in.

Adjust the wheel-toe in as follows:

1. Draw a line around the center of each tire.
2. Measure the center-to-center distance at the wheel hub height, at the front and rear of the tires (Figure 4).

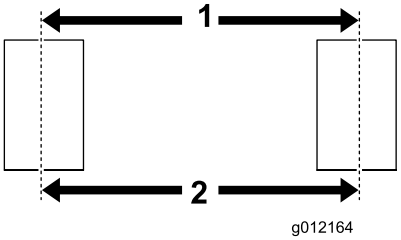

g012164

Figure 4

1. Front center-to-center distance
2. Rear center-to-center distance

3. Adjust the position of the axle mounting brackets so that the front center-to-center distance is about 3 mm (1/8 inch) less than the rear center-to-center distance (Figure 2).

Adjusting Trailer Tongue

Move the spacers to the top or bottom of the tongue until the trailer is parallel to the ground or until it fits the tow vehicle hitch (Figure 5).

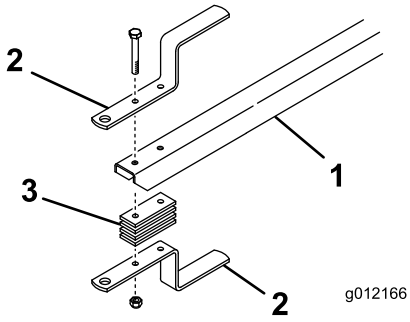

g012166

Figure 5

1. Trailer tongue
2. Trailer hitch
3. Hitch spacer

Loading the Trailer

1. Unhook the ramp latch from the wheel guide and lower the ramp to ground.
2. Pivot the first set of wheel rods upward.
3. Remove the baskets from the machine to be towed and disengage the reel drive.
4. Move the throttle to the slowest position and **slowly** drive the machine onto the trailer until the transport wheels contact the trailer stops (Figure 1).
5. Shut off the engine and engage the parking brake.
6. Pivot the first set of wheel rods downward behind the transport wheels (Figure 1).
7. Repeat this procedure if you are hauling 2 machines.

   Note: Use the first set of wheel rods as the stop for the second machine (Figure 6).

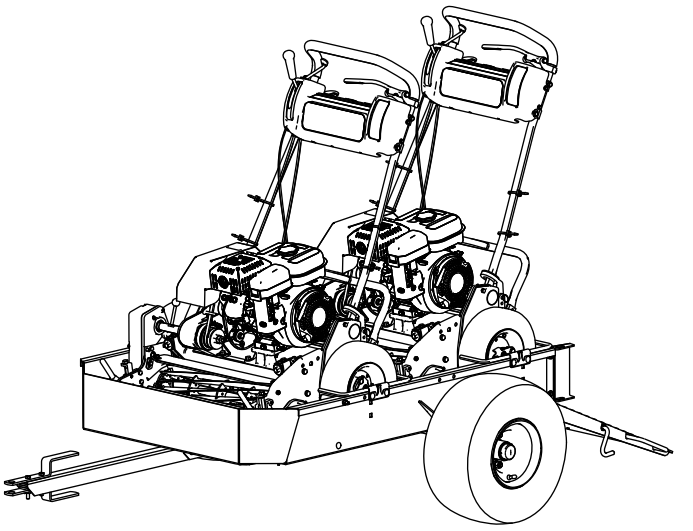

g216504

Figure 6

8. Pivot the trailer ramp upward and hook the ramp latch into the hole in the top of the wheel guide (Figure 3).
9. Store the baskets in the tow vehicle.

Operation

Compatible Machines

This trailer supports a variety of walk behind Greensmaster machines, see the following lists for more detail.

Important: **This trailer is designed to transport walk-behind Greensmaster mowers only. Hauling other products may damage the trailer.**

- Machines that you can tow without modification
  - Greensmaster 1000
  - Greensmaster 1010
  - Greensmaster 2000
  - Greensmaster Flex 21
  - Greensmaster Flex 2100
  - Greensmaster Flex 2120
  - Greensmaster eFlex 2100
  - Greensmaster eFlex 2120
- Machines that you can tow only with the 18-inch conversion kit installed
  - Greensmaster 800
  - Greensmaster Flex 18
  - Greensmaster Flex 1800
  - Greensmaster Flex 1820
  - Greensmaster eFlex 1800
  - Greensmaster eFlex 1820
- Machines that you can tow only with the transport axles removed
  - Greensmaster 1600
  - Greensmaster 1610
  - Greensmaster 2600

  Important: **Use only a tow vehicle with the proper tow rating. The trailer and 2 machines weigh approximately 363 kg (800 lb).**

  Ensure that the tow vehicle has adequate braking and handling capacity by checking the recommendations of the vehicle manufacturer.

Operating Tips

- Ensure that the trailer is properly connected to the tow vehicle before loading or unloading the machines to prevent the tongue from suddenly moving or flipping up.
- The trailer adds extra towing weight to the vehicle. Drive the vehicle safely.
  - Do not drive the machine on highways or public roads.
  - Always **slow** the tow vehicle when approaching and while making a turn.
  - Always **slow** the tow vehicle when driving in unfamiliar areas or over rough terrain.
  - Always **slow** the tow vehicle when changing the direction of travel or preparing to stop.
  - Always **slow** the tow vehicle when turning or driving on slopes.
  - **Do not** make sudden or sharp turns. **Do not** suddenly change direction of travel on an incline, ramp, grade, slope, or similar surface.
  - Always adjust the tow vehicle speed to allow for existing ground conditions, such as wet slick surfaces, loose sand or gravel, and/or low-visibility conditions, such as dim or bright lighting, fog, mist, or rain.
  - Be especially careful when driving a heavily loaded vehicle down an incline or slope. Drive the vehicle up and down the face of the slopes, inclines, or grades whenever possible. **Do not** drive across the face of a slope if at all possible. There is a risk of upsetting the vehicle, which can result in serious injury or death.
- Before backing up, look behind you and ensure that it is clear of people and objects. Back up slowly and watch the trailer movement closely.
- Use extreme caution and slow speed when backing up the trailer and tow vehicle.
- Watch out for traffic when near or crossing roads. Always yield the right of way to pedestrians and other vehicles.
- If the trailer begins to vibrate abnormally, stop the tow vehicle immediately. Shut off the tow vehicle engine. Repair all damage before towing.
- Before servicing or making any adjustments to the trailer, do the following:
  - Stop the tow vehicle and engage the parking brake.
  - Shut off the tow vehicle engine and remove the key.
- Keep all fasteners tightened securely. Replace any parts removed when servicing or making adjustments.