FORM NO. 3321–414 Rev. C

TORO®

MODEL NO. 03200–90001 & UP
MODEL NO. 03201–90001 & UP
MODEL NO. 03220
MODEL NO. 03221

OPERATOR'S MANUAL

REELMASTER® 3100–D

Traction Unit

To assure maximum safety, optimum performance, and to gain knowledge of the product, it is essential that you or any other operator of the mower read and understand the contents of this manual before the engine is ever started. Pay particular attention to the SAFETY INSTRUCTIONS highlighted by this symbol.

The safety alert symbol means CAUTION, WARNING or DANGER – personal safety instruction. Failure to comply with the instruction may result in personal injury.

The Reelmaster 3100–D conforms to the American National Standards Institute's safety standards for Riding Mowers; thus, Toro proudly displays the ANSI safety seal .

TORO
THIS UNIT CONFORMS TO ANSI B71.4–1990



The TORO COMPANY – 1998, Rev. 1999

FOREWORD

The REELMASTER 3100 was developed to provide an efficient, reliable and time−saving method of mowing high quality turf. The latest concepts in engineering and design have been incorporated into this machine along with the highest quality parts and workmanship. Excellent service will be derived if proper operation and maintenance practices are followed.

We know, since you have purchased the industry leader in mowing excellence, that future performance and dependability are of prime importance. TORO also is concerned about future use of the machine and of the safety to the user. Therefore, this manual should be read by you and those involved with the REELMASTER to ensure that safety, proper set−up, operation and maintenance procedures are followed at all times. The major sections of the manual are:

1. Safety Instructions
2. Set−up Instructions
3. Before Operating Instructions
4. Operating Instructions
5. Maintenance

Safety, mechanical and some general information in this manual is emphasized. DANGER, WARNING and CAUTION identify safety messages. Whenever the triangular safety alert symbol appears, it is followed by a safety message that must be read and understood. For more complete details concerning safety, read the safety instructions on pages 4 and 5. IMPORTANT identifies special mechanical information and NOTE identifies general information worthy of special attention.

⚠ WARNING: ⚠

Diesel engine exhaust and some of its constituents are known to the State of California to cause cancer, birth defects, or other reproductive harm.

Whenever you have questions or need service, contact your local authorized Toro Distributor. In addition to having a complete line of accessories and professional turf care service technicians, the distributor has a complete line of genuine TORO replacement parts to keep your machine operating properly. Keep your TORO all TORO. Buy genuine TORO parts and accessories.

TABLE OF CONTENTS

	Page
SAFETY INSTRUCTIONS	4–5
SAFETY INSTRUCTIONS & DECALS	6
SPECIFICATIONS	7
LOOSE PARTS CHART	8
SET-UP INSTRUCTIONS	9–12
Install Wheels	9
Install Steering Wheel	9
Activate, Charge and Connect Battery	9
Install Seat	10
Install Hood Latch	10
Install Exhaust Guard	11
Install ROPS	11
Install Front Lift Arms	11
Mount Carrier Frames To Cutting Units	12
Mount Cutting Units	13
Mount Cutting Unit Drive Motors	13
Adjust Lift Arms	14
BEFORE OPERATING	15–16
Check Crankcase Oil	15
Fill Fuel Tank	15
Check Cooling System	15
Check Hydraulic System Fluid	16
Check Tire Pressure	16
Check Reel To Bedknife Contact	16
Check Torque Of Wheel Nuts	16
CONTROLS	17–18
OPERATING INSTRUCTIONS	19–22
Starting/Stopping Engine	19
Bleeding Fuel System	19
Check Operation of Interlock Switches	20
Towing Traction Unit	20
Operating Characteristics	20
Mowing Techniques	21
After Mowing	22
Selecting Clip Rate (Reel Speed)	22

	Page
DAILY MAINTENANCE CHECKLIST	23
MAINTENANCE SCHEDULE	24
LUBRICATION	25–26
GENERAL MAINTENANCE	27
Hood Removal	27
AIR CLEANER MAINTENANCE	28
General Air Cleaner Maintenance	28
Servicing Air Cleaner	28
ENGINE MAINTENANCE	29–31
Engine Oil and Filter	29
Fuel System	29
Bleeding Air From Injectors	30
Engine Cooling System	30
Servicing Engine Belts	30
Adjusting Throttle	31
HYDRAULIC MAINTENANCE	32–33
Changing Hydraulic Fluid	32
Replacing Hydraulic Filter	32
Checking Hydraulic Lines and Hoses	32
Hydraulic System Test Ports	33
Adjusting Traction Drive For Neutral	33
BRAKE MAINTENANCE	34
Parking Brake Adjustment	34
ELECTRICAL MAINTENANCE	35
Battery Care	35
Battery Storage	35
Fuses	35
BACKLAPPING	36
ELECTRICAL SCHEMATIC	37
HYDRAULIC SCHEMATICS	38
PREPARATION FOR SEASONAL STORAGE	39
IDENTIFICATION AND ORDERING	39
THE TORO PROMISE	Back Cover

SAFETY INSTRUCTIONS

The REELMASTER 3100−D was tested and certified by TORO for compliance with the B71.4-1990 specifications of the American National Standards Institute. Although hazard control and accident prevention partially are dependent upon the design and configuration of the machine, these factors are also dependent upon the awareness, concern, and proper training of the personnel involved in the operation, transport, maintenance, and storage of the machine. Improper use or maintenance by the operator or owner of the machine can result in injury. To reduce the potential for any injury, comply with the following safety instructions.

SUPERVISOR'S RESPONSIBILITIES

1. Make sure operators are thoroughly trained and familiar with the Operator;s Manual and all the labels on the machine.

2. Be sure to establish your own special procedures and work rules for unusual operating conditions (e.g. slopes to steep for machine operation. **Survey complete mowing site to determine which hills can be safely operated on.** When performing this site survey always use common sense and take into consideration the turf condition and the rollover risk.
To determine which hills or slopes may be safely operated on use the inclinometer provided with each machine. To perform a site survey, lay a 4' two by four on the slope surface and measure the angle of the slope. The 2 by 4 will average the slope but will not take into consideration dips or holes. **THE MAXIMUM SIDE HILL ANGLE SHOULD NOT BE GREATER THAN 25 DEGREES.**

BEFORE OPERATING

3. Operate the machine only after reading and understanding the contents of this manual. A free replacement manual is available by sending complete model and serial number to:

The Toro Company
8111 Lyndale Ave. S.
Bloomington, MN 55420−1196.

4. Only trained operators, skilled in slope operation and who have read this manual should operate the machine. Never allow children to operate the machine or adults to operate it without proper instructions.

5. Become familiar with the controls and know how to stop the machine and engine quickly.

6. Do not carry passengers on the machine. Keep everyone, especially children and pets, away from the areas of operation.

7. Keep all shields, safety devices and decals in place. If a shield, safety device or decal is damaged, malfunctioning or illegible, repair or replace it before operating the machine.

8. Always wear substantial shoes. Do not operate machine while wearing sandals, tennis shoes or sneakers. Do not wear loose fitting clothing because it could get caught in moving parts and possibly cause personal injury.

9. Wearing safety glasses, safety shoes, long pants and a helmet is advisable and required by some local ordinances and insurance regulations.

10. Make sure the work area is clear of objects which might be picked up and thrown by the reels.

11. Fill fuel tank with diesel fuel before starting engine. Avoid spilling any fuel. Since fuel is highly flammable, handle it carefully.

A. Use an approved fuel container.

B. Do not remove cap from fuel tank when engine is hot or running.

C. Do not smoke while handling diesel fuel.

D. Fill fuel tank outdoors and not over one inch from the top of the tank, (bottom of the filler neck). Do not overfill.

WHILE OPERATING

12. Do not run the engine in a confined area without adequate ventilation. Exhaust fumes are hazardous and could be deadly.

13. Sit on the seat when starting and operating the machine.

14. Check interlock switches daily for proper operation (Refer To Checking Interlock Switches, Page 19). Do not rely entirely on safety switches -shut off engine before getting off seat. If a switch fails, replace it before operating the machine. The interlock system is for your protection, so do not bypass it. Replace all interlock switches every two years.

15. Operator must be skilled and trained in how to drive on hillsides. Failure to use caution on slopes or hills may cause vehicle to tip or roll, possibly resulting in personal injury or death. Always wear your seat belt.

16. This triplex mower has a unique drive system for superior traction on hills. The uphill wheel will not spin out and limit traction like conventional triplexes. If operated on a side hill that is too steep, rollover will occur before losing traction.

SAFETY INSTRUCTIONS

17. The slope angle at which the machine will tip is dependent on many factors. Among these are mowing conditions such as wet or undulating turf, speed (especially in turns), position of the cutting units (with sidewinder), tire pressure and operator experience. At side hill slope angles of 20 degrees or less the risk of a rollover is low. As the slope angle increases to a Toro recommended maximum limit of 25 degrees the risk of a rollover increases to a moderate level. **DO NOT EXCEED A 25 DEGREE SIDE HILL ANGLE BECAUSE THE RISK OF A ROLLOVER AND SERIOUS INJURY OR DEATH IS VERY HIGH.** Stay alert for holes in terrain and other hidden hazards. Use extreme caution when operating close to sand traps, ditches, creeks, steep hillsides or other hazards. Reduce speed when making sharp turns. Do not turn on hills. Avoid sudden stops and starts. Use reverse pedal for braking. Cutting units must be lowered when going down slopes for steering control.

18. When starting the engine:

A. Engage parking brake.

B. Be sure traction pedal is in neutral and reel drive is in disengage position.

C. After engine starts, release parking brake and keep foot off traction pedal. Machine must not move. If movement is evident, the neutral control linkage is incorrectly adjusted: therefore, shut engine off and adjust until machine does not move when traction pedal is released. Refer to Adjusting Transmission for Neutral.

19. Before backing up, look to the rear and assure no one is behind the machine. Watch out for traffic when near or crossing roads. Always yield the right of way.

20. Keep hands, feet and clothing away from moving parts and the reel discharge area. Grass baskets, if so equipped, must be in place during reel operation for maximum safety.

21. This product may exceed noise levels of 85 dB(A) at the operator position. Ear protectors are recommended for prolonged exposure to reduce the potential of permanent hearing damage.

22. Raise the cutting units when driving from one work area to another.

23. Do not touch engine, muffler, exhaust pipe or hydraulic tank while engine is running or soon after it has stopped because these areas could be hot enough to cause burns.

24. If a cutting unit strikes a solid object or vibrates abnormally, stop immediately. Turn engine off, wait for all motion to stop and inspect for damage. A damaged reel or bedknife must be repaired or replaced before operation is continued.

25. Before getting off the seat:

A. Move traction pedal to neutral.

B. Set the parking brake.

C. Disengage the cutting units and wait for the reels to stop spinning.

D. Stop the engine and remove key from the ignition switch.

26. Whenever machine is left unattended, make sure reels are not spinning, key is removed from ignition switch and parking brake is set.

MAINTENANCE

27. Before servicing or making adjustments to the machine, stop the engine and remove key from switch to prevent accidental starting of the engine.

28. Check performance of all interlock switches daily. Do not defeat interlock system. It is for your protection.

29. To ensure entire machine is in good operating condition, frequently check and keep all nuts, bolts, screws and hydraulic fittings tight.

30. Make sure all hydraulic line connectors are tight, and all hydraulic hoses and lines are in good condition before applying pressure to the system.

31. Keep body and hands away from pin hole leaks or nozzles that eject hydraulic fluid under high pressure. Use paper or cardboard, not hands, to search for leaks. Hydraulic fluid escaping under pressure can have sufficient force to penetrate skin and do serious damage. If fluid is injected into the skin it must be surgically removed within a few hours by a doctor familiar with this form of injury or gangrene may result.

32. Before disconnecting or performing any work on the hydraulic system, all pressure in system must be relieved by stopping engine and lowering cutting units to the ground.

33. If major repairs are ever needed or if assistance is desired, contact an Authorized Toro Distributor.

34. To reduce potential fire hazard, keep the engine area free of excessive grease, grass, leaves and accumulation of dirt.

35. If the engine must be running to perform a maintenance adjustment, keep hands, feet, clothing, and any other parts of the body away from the cutting units and any moving parts. Keep everyone away.

36. Do not overspeed the engine by changing governor settings. To assure safety and accuracy, have an Authorized Toro Distributor check maximum engine speed with a tachometer.

37. Engine must be shut off before checking oil or adding oil to the crankcase.

38. To insure optimum performance and safety, use genuine TORO replacement parts and accessories. Replacement parts and accessories made by other manufacturers could be dangerous, and such use could void the product warranty of The Toro Company.

SAFETY AND INSTRUCTION DECALS

The following safety and instruction decals are affixed to the traction unit. If any decal becomes illegible or damaged, install a new decal. Part numbers are listed below and in your Parts Catalog. Order replacements from your Authorized Toro Distributor.

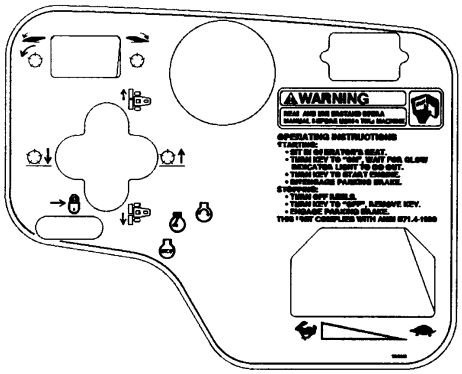

ON CONSOLE PANEL
(Part No. 99−3443, Model 03200)
(Part No. 99−3493, Model 03201)
(Add Part No. 99−3558 for CE)

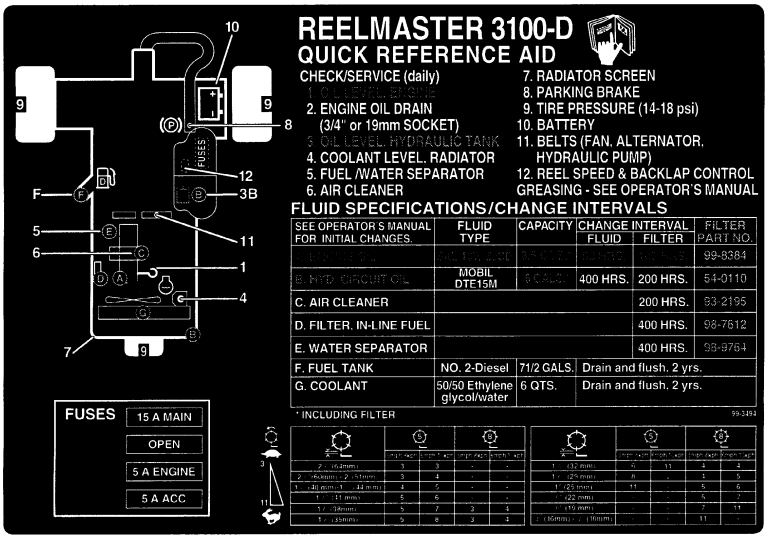

ON INSIDE OF TOOL BOX COVER
(Part No. 99−3494)

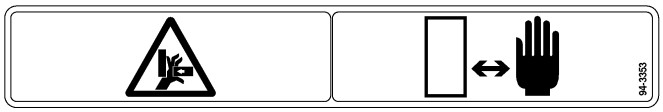

ON SCISSORS LINKAGE
(Part No. 94−3353)
Warning! Pinch Point

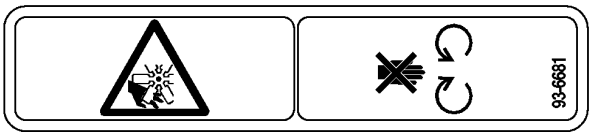

ON FAN SHROUD
(Part No. 93−6681)

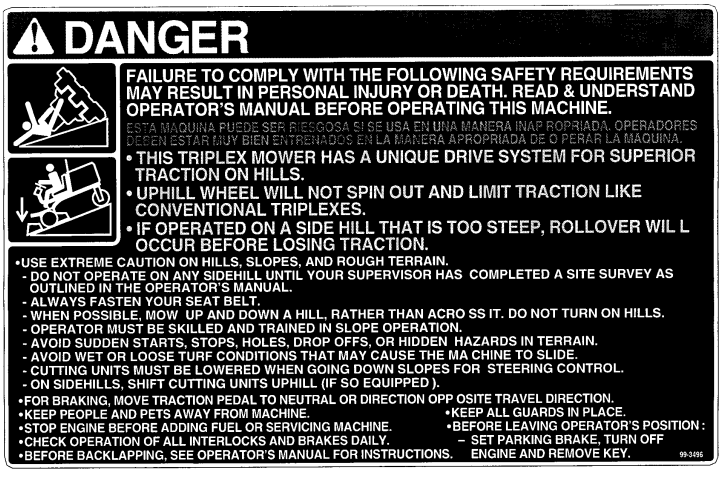

ON TOOL BOX COVER
(Part No. 99−3496)
(Part No. 99−3560 for CE)

SPECIFICATIONS

Engine: Kubota three cylinder, 4 cycle liquid cooled diesel engine. 21.5 hp @ 2500 rpm Governed to 2650 rpm. 68.5 cu. in. (1124 cc) displacement. Heavy duty, 2-stage, remote mounted air cleaner. High water temperature shutdown switch.

Cooling System: Radiator capacity is approximately 6 qts. of 50/50 mixture of ethylene glycol anti−freeze. Remote mounted 1 qt. expansion tank.

Electrical: 12 volt Group 55, 450 cold cranking amps at 0°F (−18°C), 75 minute reserve capacity at 80°F (27°C). 40 amp alternator with regulator/rectifier. Seat switch, PTO, parking brake and traction interlock switches.

Fuel Capacity: 7.5 gallons.

Traction Drive: High torque hydraulic wheel motors. 3−wheel drive. Oil cooler and shuttle valve provide positive closed−loop cooling.

Hydraulic Oil Capacity/Filter: Remote mounted, 3.5 gallon oil reservoir. 10 micron remote mounted spin on filter.

Ground Speed: Infinitely variable speed selection in forward and reverse

Mowing speed: 0−6 mph (adjustable)
Transport speed: 0−9 mph
Reverse speed: 0−3.5 mph

Tires/Wheels: All tires are 20 x 10−10 tubeless, 4−ply rating with demountable rims. Recommended tire pressure: 14−18 psi front and rear tires.

Frame: Tricycle vehicle with 3−wheel traction drive and rear wheel steering. Frame consists of formed steel, welded steel and steel tubing components.

Steering: Power steering.

Brakes: Service braking accomplished through dynamic characteristics of Hydrostat. Parking or emergency brake is actuated by ratchet hand lever on the operator's RIGHT hand side.

Controls: Foot operated forward and reverse traction pedals and Mow/Transport slide. Hand operated throttle, ignition switch, reel engagement switch, reel unit lift and shift lever, parking brake and seat adjustment.
Note: Shift lever only on Model 03201.

Gauges and Protective Systems: Hour meter. 4 light warning cluster gauge: oil pressure, water temperature, amps and glow plug.

Seat: Optional standard or deluxe seats.

Cutting Unit Lift: Hydraulic lift with automatic reel shut off.

Optional Equipment:

Standard Seat	Model 03224
Deluxe Suspension Seat	Model 03225

LOOSE PARTS CHART

Note: Use this chart as a checklist to assure all parts necessary for assembly have been received. Without these parts, total set-up cannot be completed. Some parts may have already been assembled at factory.

PART DESCRIPTION	QTY.	USE
Wheel Assembly	3	Mount to wheel hubs
Steering Wheel Jam Nut Cover Screw	1 1 1 1	Mount to steering shaft
Hood Lock Bracket Screw – 1/4–20 x 1–1/2" lg. Flat Washer – 1/4" Lock Nut – 1/4–20	1 1 1 1	Mount to hood for European Compliance
Exhaust Guard Self Tapping Screw	1 4	Mount to machine for European Compliance
ROPS Flange Head Capscrew Flange Nut	1 4 4	Mount to frame
Hose Clamp	1	Secure vent hose to vent tube of ROPS
Lift Arms Pivot Rod Capscrews—5/16– 18 x 7/8"Lg.	2 2 2	 Install pivot rods to lift arms (supplied with Lift Arm kit)
Thrust Washers Lynch Pin	2 2	Mount cutting units to lift arms (supplied with Lift Arm kit)
Key	2	
EEC Decal EEC Certificate	3 2	Affix to machine for European Compliance
Operators Manual Parts Catalog Operator Video Engine Manual Pre–Delivery Check List Registration Card	2 1 1 1 1 1	Read before operating machine View before operating machine Fill out before delivery to customer Fill out and send to the Toro Co

Specifications and design subject to change without notice.

SET–UP INSTRUCTIONS

INSTALL WHEELS

1. Mount a wheel assembly onto each wheel hub (valve stem outward).

IMPORTANT: Rear tire has a narrower rim than front tires.

2. Install lug nuts and torque to 45–65 ft–lb.

INSTALL STEERING WHEEL (Fig. 1)

1. Slide steering wheel onto steering shaft.

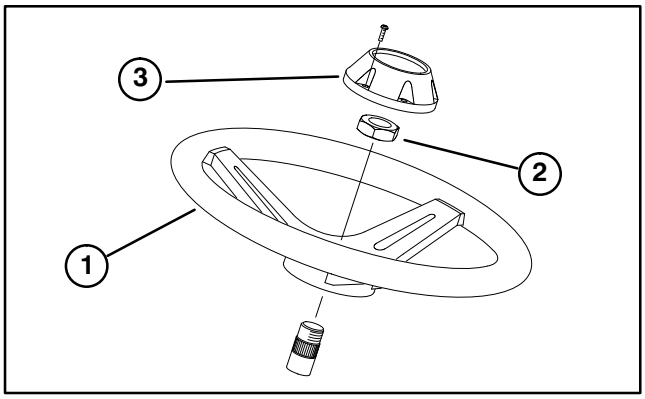

Figure 1
1. Steering Wheel
2. Jam Nut
3. Cap

2. Secure steering wheel to shaft with jam nut and tighten it to 35 ft-lb.

3. Install cap to steering wheel with screw.

ACTIVATE, CHARGE AND CONNECT BATTERY (Fig. 2 & 3)

1. Open hood.

2. Remove battery cover.

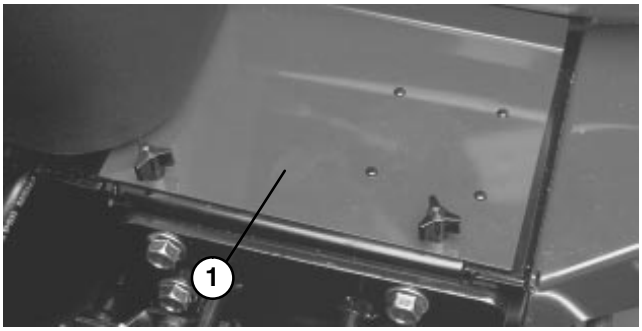

Figure 2
1. Battery cover

3. If Battery is not filled with electrolyte or activated, bulk electrolyte with 1.260 specific gravity must be purchased from a local battery supply outlet and added to battery.

4. Remove filler caps from battery and slowly fill each cell until electrolyte is just above the plates.

5. Replace filler caps and connect a 3 to 4 amp battery charger to the battery posts. Charge the battery at a rate of 3 to 4 amperes for 4 to 8 hours.

CAUTION

Wear safety goggles and rubber gloves when working with electrolyte. Charge the battery in a well ventilated place so gasses produced while charging can dissipate. Since the gases are explosive, keep open flames and electrical spark away from the battery; do not smoke. Nausea may result if the gases are inhaled. Unplug charger from electrical outlet before connecting to or disconnecting charger leads from battery posts.

6. When battery is charged, disconnect charger from electrical outlet and battery posts.

7. Remove filler caps. Slowly add electrolyte to each cell until level is up to fill ring. Install filler caps.
IMPORTANT: **Do not overfill battery. Electrolyte will overflow onto other parts of the machine and severe corrosion and deterioration will result.**

8. Install the positive cable (red) to the positive (+) terminal and the negative cable (black) to the negative (—) terminal of the battery and secure with capscrews and nuts. Make sure positive (+) terminal is all the way onto post and cable is positioned snug to battery. Cable must not contact battery cover. Slide the rubber boot over the positive terminal to prevent possible short–out from occurring.

WARNING

Connecting cables to the wrong post could result in personal injury and/or damage to the electrical system.

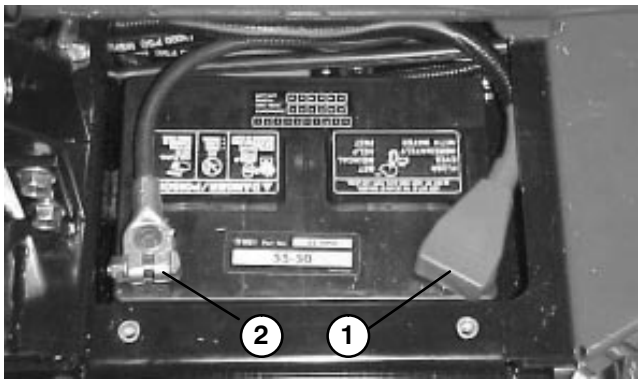

Figure 3
1. Positive (+) battery cable
2. Negative (—) battery cable

IMPORTANT: If battery is ever removed, make sure battery clamp bolts are reinstalled with bolt heads positioned on bottom side and nuts on top side. If clamp bolts are reversed, they may interfere with hard lines when shifting cutting units.

5. Coat both battery connections with Grafo 112X (skin over) grease, Toro Part No. 505−47, petroleum jelly or light grease to prevent corrosion and slide rubber boot over positive terminal.

6. Install battery cover.

INSTALL SEAT (Fig. 4 − 7)

The Reelmaster 3100 is shipped without the seat assembly. Deluxe Seat Kit, Model 03225 or Standard Seat Kit, Model 03224, must be installed as follows:

1. Remove capscrews securing seat mounting straps to traction unit frame (Fig. 4).

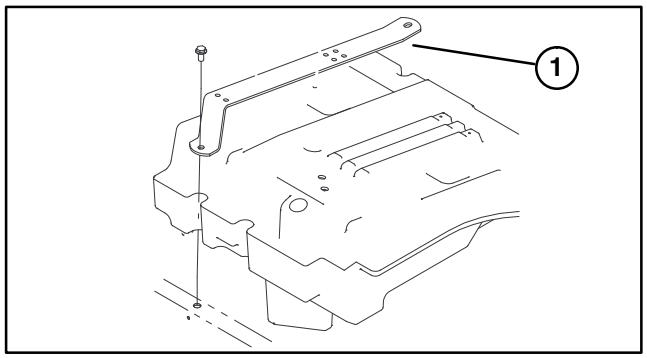

Figure 4
1. Seat mounting strap (2)

2. Secure seat mounting straps to seat adjusters with (4) flange nuts (standard seat) or (4) capscrews, flat washers and flange nuts (deluxe seat). Mounting fasteners supplied with seat kit loose parts.

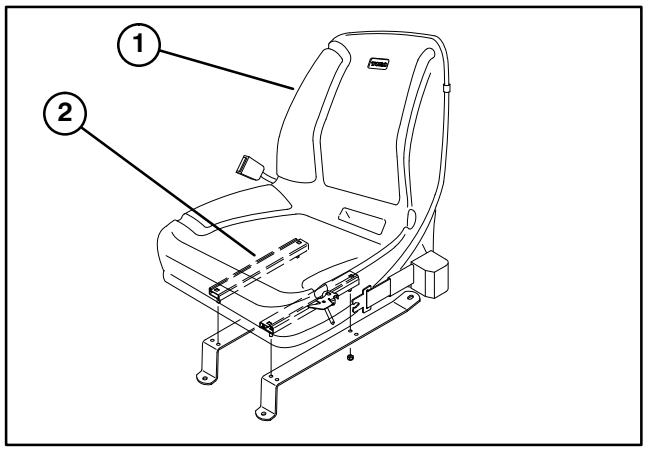

Figure 5
1. Standard seat
2. Seat adjusters

3. Position seat and seat straps on frame aligning mounting holes.

4. Route seat switch wire under right hand seat strap and connect to appropriate seat switch connector on harness.

5. On deluxe seat only, route unused seat switch connector back under seat strap and secure both wires to rear most hole in seat strap (Fig. 6) with a cable tie (cable tie supplied with seat kit).

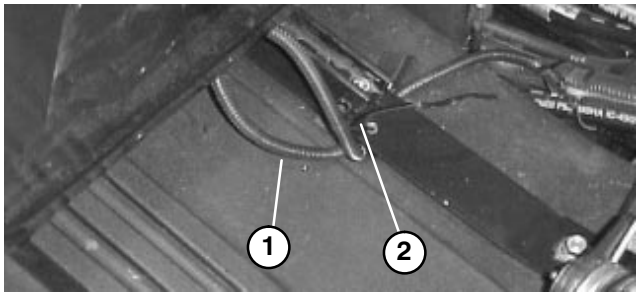

Figure 6
1. Seat switch wire
2. Cable tie

6. On standard seat only, slide seat all the way forward, pull wire to the right so unused connector is positioned as shown in figure 7 and secure seat switch wire to rear most hole in seat strap with a cable tie (cable tie supplied with seat kit).

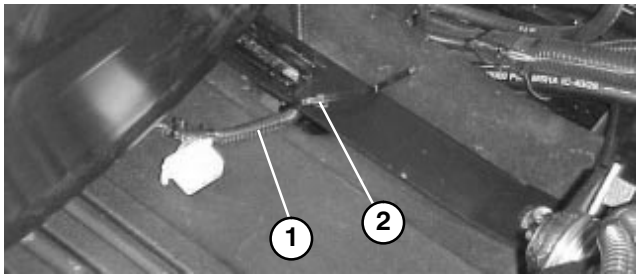

Figure 7
1. Seat switch wire
2. Cable tie

7. Mount seat straps to frame with fasteners previously removed.

8. Slide seat completely forward and backward to ensure proper operation and that seat switch wires and connectors are not pinched or do no contact any moving parts.

INSTALL HOOD LATCH (Fig. 8)

(European Compliance)

1. Unhook hood latch from bracket.

2. Slide hood lock bracket onto latch.

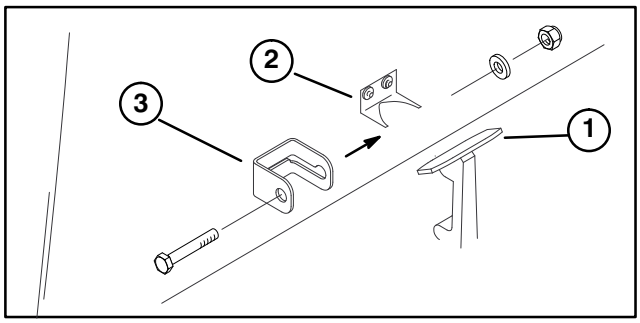

Figure 8
1. Hood latch
2. Hood latch bracket
3. Hood lock bracket

3. Re−hook latch onto bracket.

4. Insert 1/4−20 x 1−1/2" lg. capscrew thru hood lock bracket and secure with a capscrew, flat washer and locknut.

SET–UP INSTRUCTIONS

INSTALL EXHAUST GUARD (Fig. 9)

(European Compliance)

1. Position exhaust guard around muffler while aligning mounting holes with holes in frame.

2. Secure exhaust guard to frame with (4) self tapping screws.

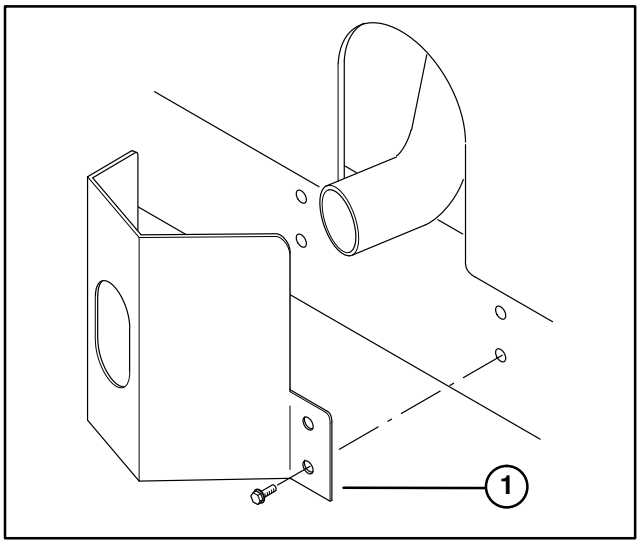

Figure 9

1. Exhaust guard

INSTALL ROPS (Fig. 10)

IMPORTANT: Never weld or modify ROPS. Replace a damaged ROPS, do not repair or revise. Any alteration of ROPS must be approved by manufacturer.

3. Lower ROPS frame onto traction unit mounting brackets, aligning mounting holes. Vent tube, secured to ROPS, must be positioned on left side of machine.

4. Secure each side of roll bar to mounting brackets with (2) flange head capscrews and locknuts (Fig. 10). Torque fasteners to 60 ft–lbs.

5. Secure fuel line vent hose to vent tube on ROPS with hose clamp.

CAUTION

Fuel line vent hose must be connected to vent tube prior to starting engine or fuel will flow from hose.

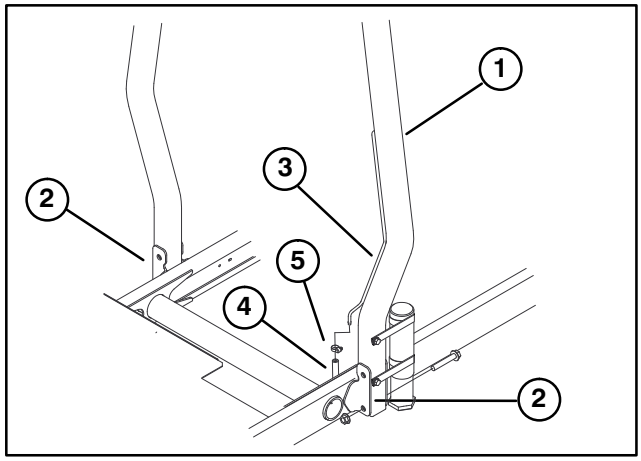

Figure 10

1. ROPS
2. Mounting bracket
3. Vent tube
4. Fuel line vent tube hose
5. Hose clamp

INSTALL FRONT LIFT ARMS (Fig. 11 – 25)

1. Remove (2) capscrews securing lift arm pivot shaft link to lift arm pivot shafts. Remove and retain pivot shaft link and capscrews (Fig. 11).

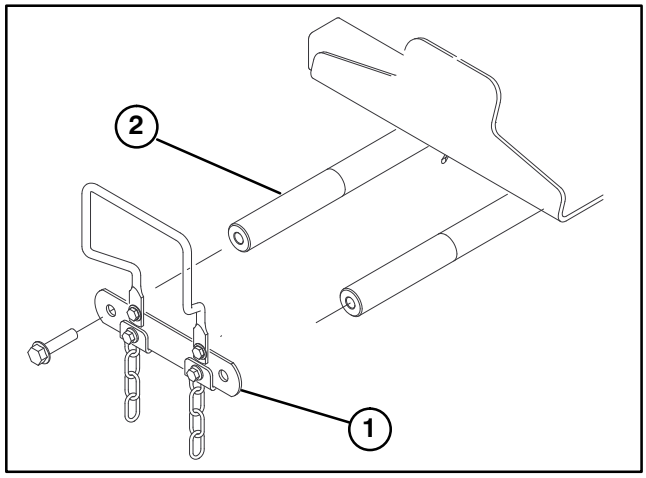

Figure 11

1. Lift arm pivot shaft link
2. Lift arm pivot shaft

2. Insert a pivot rod into each (R.H. & L.H.) lift arm and align mounting holes (Fig. 12).

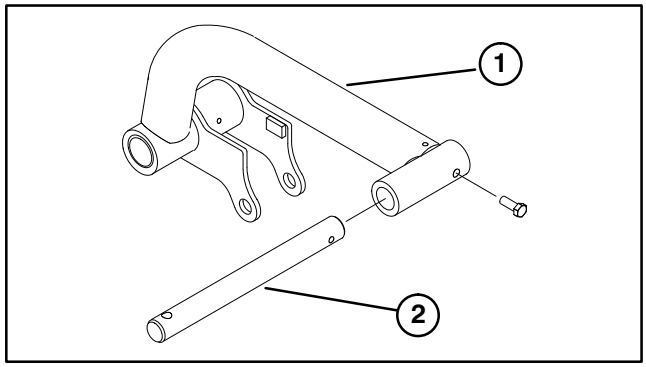

Figure 12

1. Lift arm
2. Pivot rod

SET−UP INSTRUCTIONS

3. Secure pivot rods to lift arms with a 5/16 − 18 x 7/8" lg. capscrew.

4. Insert R.H. & L.H. lift arms onto lift arm pivot shafts. Secure with lift arm pivot shaft link and capscrews previously removed. Torque capscrews to 70 ft−lbs.

5. Remove rear retaining rings securing mounting pins to each end of lift cylinder.

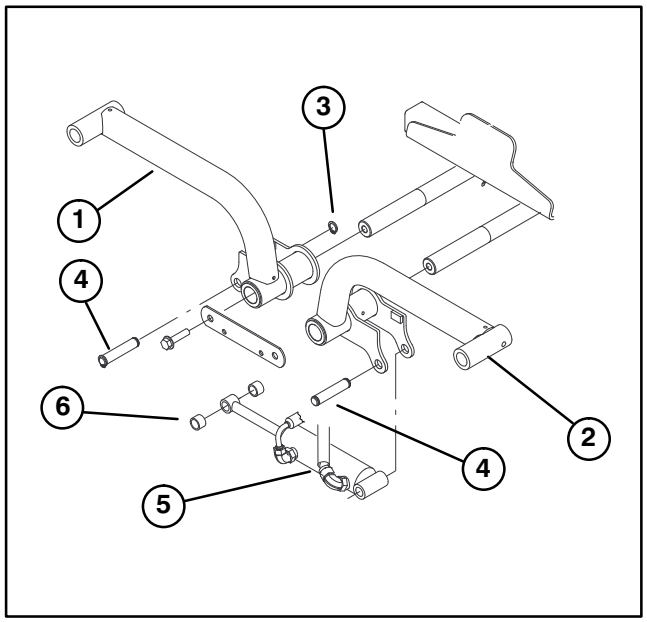

Figure 13

1. Lift arm (R.H.)
2. Lift arm (L.H.)
3. Retaining ring
4. Mounting pin
5. Lift cylinder
6. Spacer (2)

6. Secure right end of lift cylinder to right lift arm with pin and (2) spacers. Secure with retaining ring.

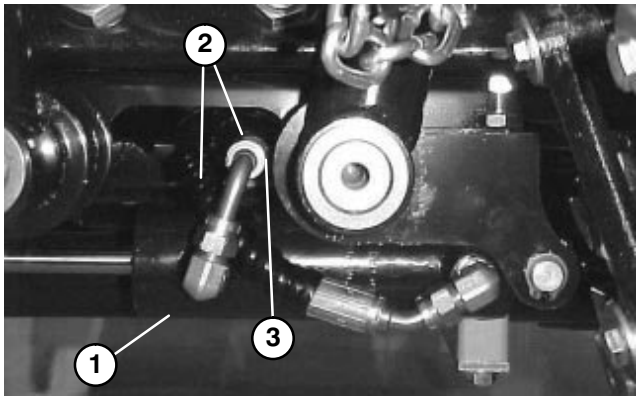

Figure 14

1. Lift cylinder
2. Hoses
3. Clearance here

7. Secure left end of lift cylinder to left lift arm with pin. Secure with retaining ring.

Note: With lift arms fully raised, hoses should be routed as shown in figure 14 and clear lift arm by .04−.12".

MOUNT CARRIER FRAMES TO CUTTING UNITS (Fig. 15 − 17)

1. Remove cutting units from cartons. Adjust per Cutting Unit Operator's Manual.

2. Position a front carrier frame (Fig. 15) onto each front cutting unit. Align mounting holes with mounting links as shown in figure 17.

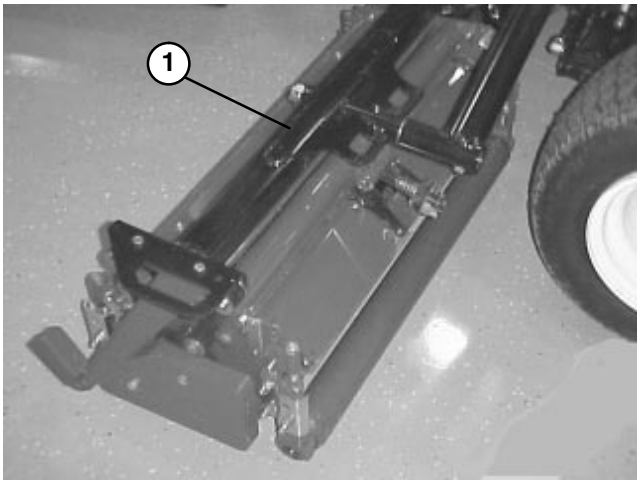

Figure 15

1. Front carrier frame

3. Position rear carrier frame (Fig. 16) onto rear cutting unit, aligning mounting holes with mounting links as shown in figure 17.

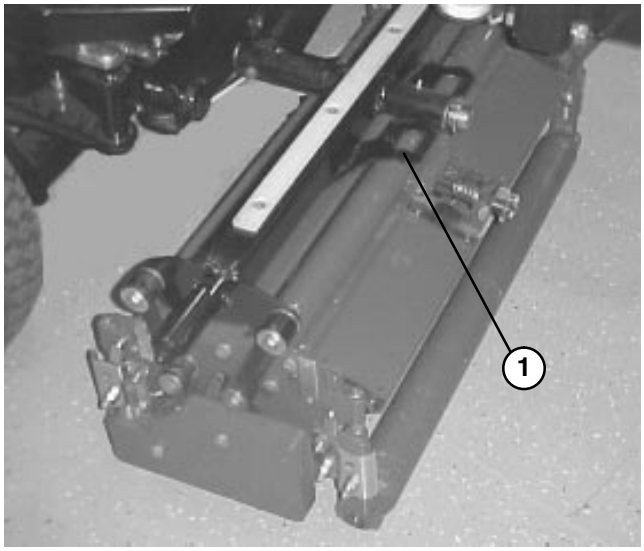

Figure 16

1. Rear carrier frame

4. Secure each mounting link to carrier frame with a 3/8−16 x 2−1/4" lg capscrew, (2) flatwashers and a locknut, as shown in figure 17. Position a washer on each side of link when mounting. Torque to 31 ft−lb.

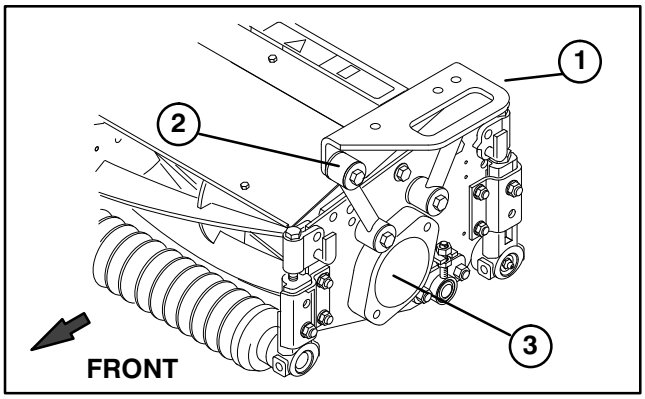

Figure 17
1. Carrier frame
2. Mounting link
3. Plug

MOUNT CUTTING UNITS (Fig. 18−20)

1. Slide a thrust washer onto each front lift arm pivot rod.

2. Slide cutting unit carrier frame onto pivot rod and secure with a lynch pin (Fig. 18).

Note: On rear cutting unit, thrust washer to be positioned between rear of carrier frame and lynch pin.

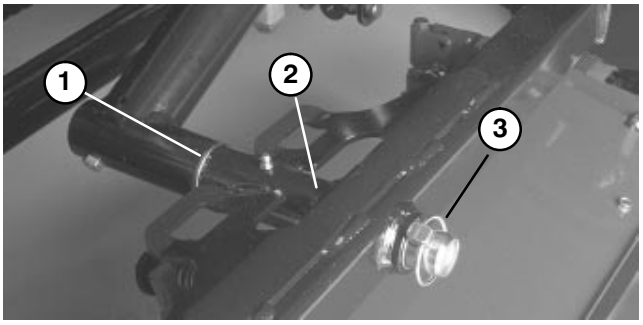

Figure 18
1. Thrust washer
2. Carrier frame
3. Lynch pin

3. Grease all lift arm and carrier frame pivot points.

IMPORTANT: Make sure hoses are free of twists or sharp bends and rear cutting unit hoses are routed as shown in Fig. 19. Raise cutting units and shift them to the left (Model 03201 only). Rear cutting unit hoses must not contact traction cable bracket. Re−position fittings and / or hoses, if required.

4. Route a tipper chain up thru slot in end of each carrier frame. Secure tipper chain to top of carrier frame with a capscrew, washer and locknut (Fig. 20).

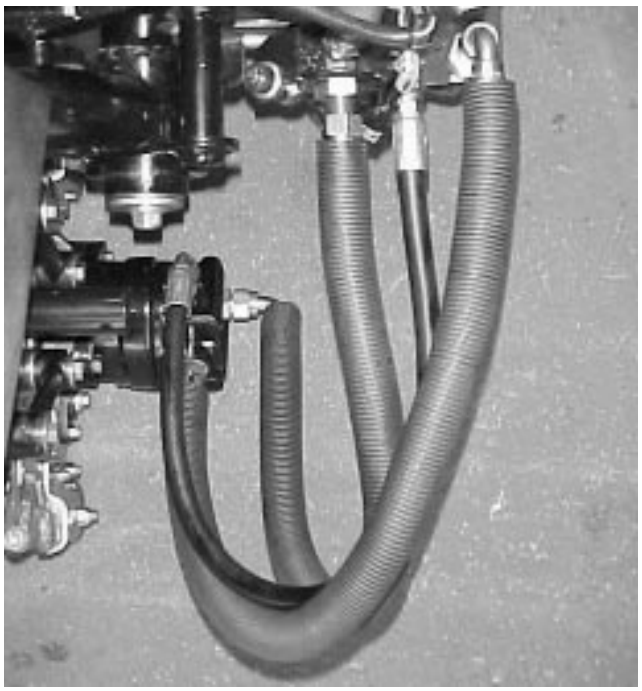

Figure 19

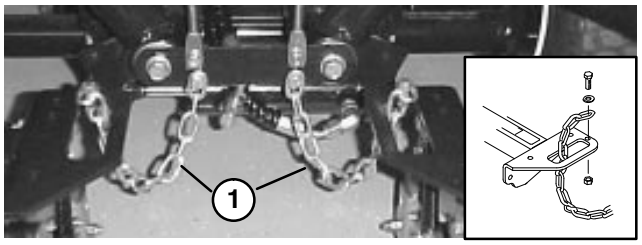

Figure 20
1. Tipper chain

MOUNT CUTTING UNIT DRIVE MOTORS (Fig. 21 & 22)

1. Position cutting units in front of lift arm pivot rods.

2. Remove weights and gasket (Fig. 21) from inside end of right hand cutting unit. Remove plug from bearing housing on outside end of right hand cutting unit and install weights and gasket. Locate spider coupling (Fig. 22) shipped in bearing housing.

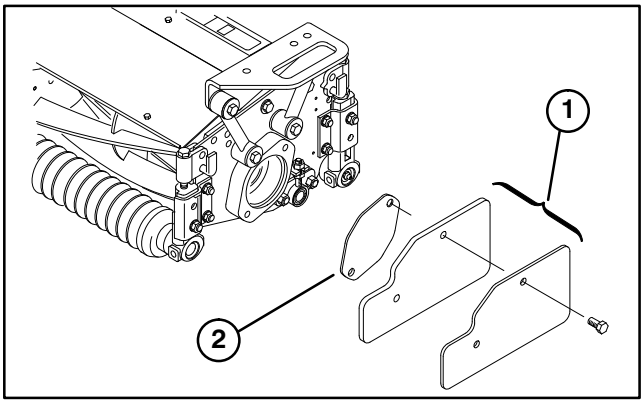

Figure 21
1. Weights
2. Gasket

3. Remove shipping plug from bearing housings on remaining cutting units (Fig. 17).

4. Insert O–ring (supplied with cutting unit) on flange of drive motor.

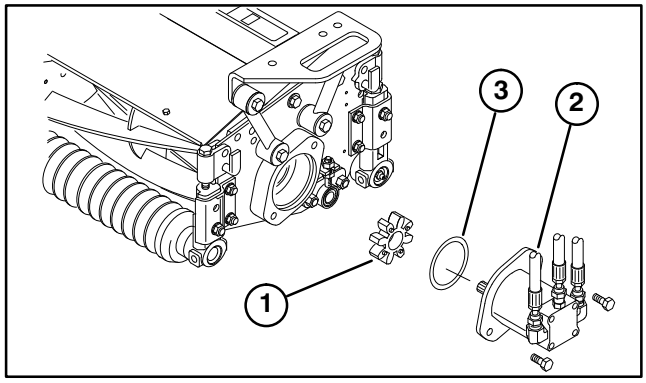

Figure 22
1. Spider coupling 2. Reel motor 3. O–ring

5. Mount the motor and the spider coupling to the drive end of the cutting unit and secure with two capscrews provided with cutting unit.

ADJUST LIFT ARMS (Fig. 23 – 27)

1. Start engine, raise lift arms and check to make sure clearance between each lift arm and floor plate bracket is .18" – .32" (Fig. 23). If clearance is not in this range, back off stop bolts (Fig. 25) and adjust cylinder to attain clearance. To adjust cylinder, back off the jam nut on the cylinder (Fig. 24), remove pin from rod end and rotate clevis. Install pin and check clearance. Repeat procedure if required. Tighten clevis jam nut.

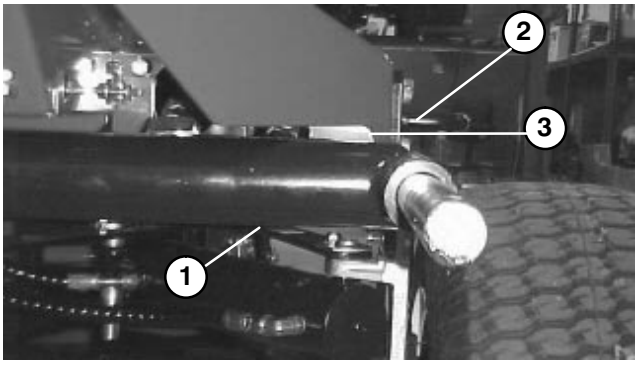

Figure 23
1. Lift arm 2. Floor plate bracket 3. Clearance

2. Check to make sure clearance between each lift arm and stop bolt is .005" – .040" (Fig. 25). If clearance is not in this range, adjust stop bolts to attain clearance.

3. Start engine, raise lift arms and check to make sure clearance between wear strap on top of rear cutting unit wear bar and bumper strap is .020" – .100" (Fig. 26). If clearance is not in this range, adjust rear cylinder to attain clearance. To adjust cylinder, lower the cutting units and back off the jam nut on the cylinder (Fig. 27). Grasp cylinder rod close to the nut with a pliers and rag and rotate the rod. Raise the cutting units and check clearance. Repeat procedure if required. Tighten clevis jam nut.

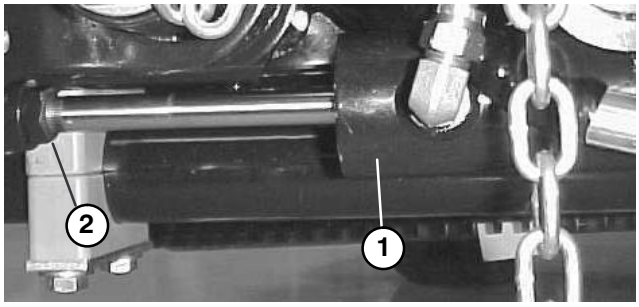

Figure 24
1. Front cylinder
2. Jam nut

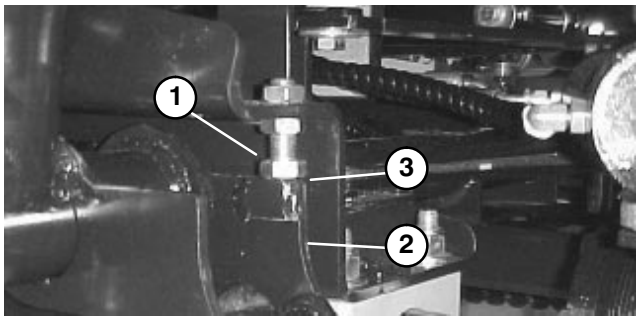

Figure 25
1. Stop bolt
2. Lift arm
3. Clearance

Note: If rear lift arm "clunks" during transport, clearance can be reduced.

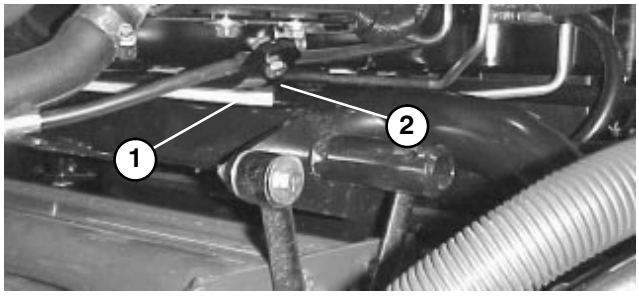

Figure 26
1. Wear bar
2. Bumper strap

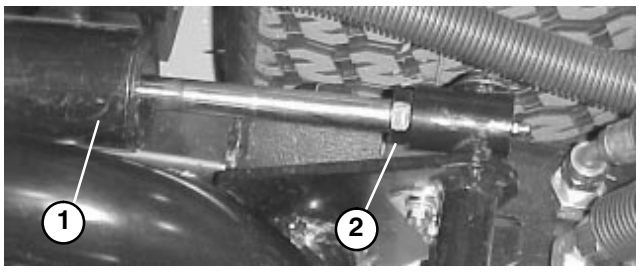

Figure 27
1. Rear cylinder
2. Adjusting nut

IMPORTANT: Lack of clearance at front stops or rear wear bar could damage lift arms.

BEFORE OPERATING

CAUTION

Before servicing or making adjustments to the machine, stop engine and remove key from the switch.

CHECK CRANKCASE OIL (Fig. 28–29)

The engine is shipped with oil in the crankcase; however, level of oil must be checked before and after the engine is first started.

Crankcase capacity is approximately 4 qts. (2.8 l) with filter.

1. Position machine on a level surface.

2. Remove dipstick and wipe it with a clean rag. Push dipstick down into dipstick tube and make sure it is seated fully. Pull dipstick out and check level of oil. If oil level is low, add enough oil to raise level to FULL mark on dipstick.

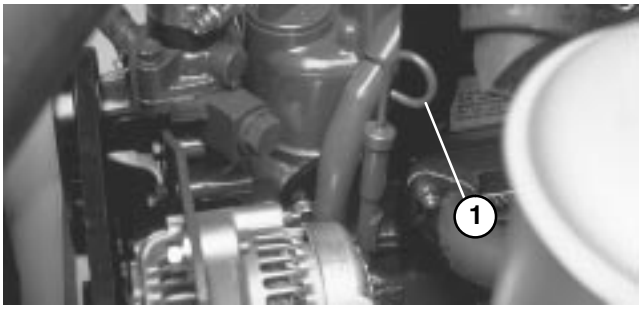

Figure 28
1. Dipstick

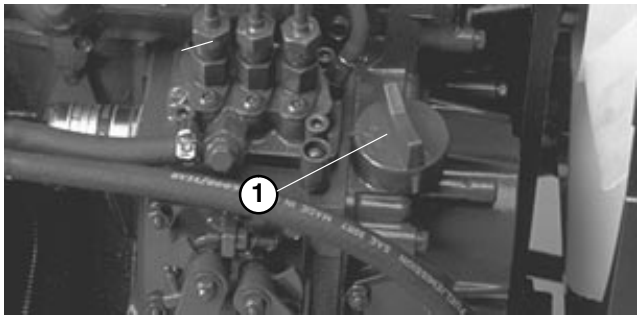

Figure 29
1. Oil fill cap

3. If oil level is low, remove oil fill cap and gradually add small quantities of oil, checking level frequently, until level reaches FULL mark on dipstick.

4. The engine uses any high–quality 10W30 detergent oil having the American Petroleum Institute – API – "service classification" CD, CE, CF CF–4 or CG–4.

5. Install oil fill cap and close hood.

IMPORTANT: Check level of oil every 5 operating hours or daily. Change oil after every 50 hours of operation.

FILL FUEL TANK (Fig. 30)

The engine runs on No. 2 diesel fuel.

Fuel tank capacity is approximately 7.5 gallons.

1. Clean area around fuel tank cap.

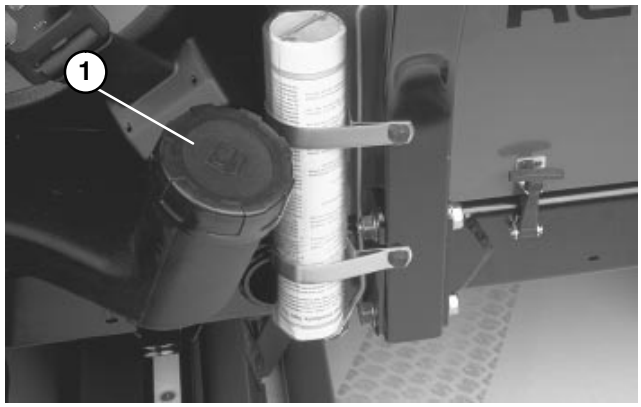

Figure 30
1. Fuel tank cap

2. Remove fuel tank cap.

DANGER

Because diesel fuel is flammable, use caution when storing or handling it. Do not smoke while filling the fuel tank. Do not fill fuel tank while engine is running, hot, or when machine is in an enclosed area. Always fill fuel tank outside and wipe up any spilled diesel fuel before starting the engine. Store fuel in a clean, safety–approved container and keep cap in place. Use diesel fuel for the engine only; not for any other purpose.

3. Fill tank to bottom of filler neck. **DO NOT OVERFILL.** Then install cap.

4. Wipe up any fuel that may have spilled to prevent a fire hazard.

CHECK COOLING SYSTEM (Fig. 31 & 32)

Clean debris off radiator and oil cooler daily (Fig. 31), hourly if conditions are extremely dusty and dirty; refer to Cleaning Radiator.

1. The cooling system is filled with a 50/50 solution of water and permanent ethylene glycol anti–freeze. Check level of coolant at beginning of each day before starting the engine. Capacity of cooling system is approximately 6 quarts.

CAUTION

If engine has been running, pressurized hot coolant can escape when radiator cap is removed and cause burns. Only open radiator cap when engine is cold.

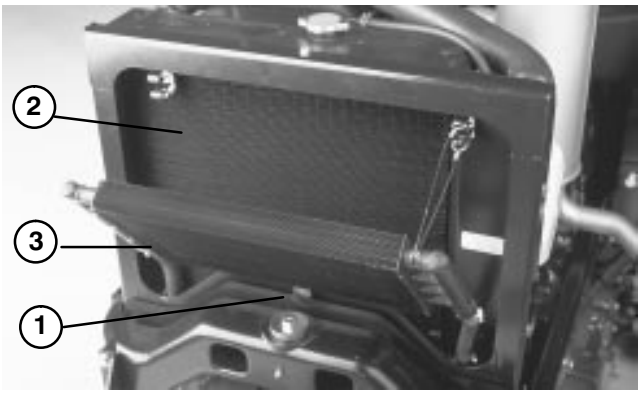

Figure 31
1. Access panel
2. Radiator
3. Oil cooler

2. Check level of coolant in expansion tank. With a cold engine, coolant level should be midway (approx) between the marks on side of tank.

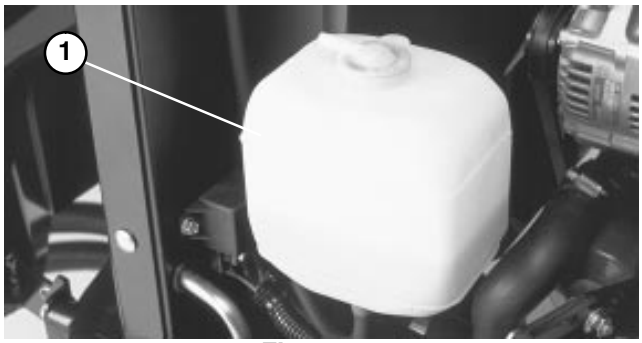

Figure 32
1. Expansion tank

3. If coolant level is low, remove expansion tank cap and replenish the system. DO NOT OVERFILL.

4. Install expansion tank cap.

CHECK HYDRAULIC SYSTEM FLUID

(Fig. 33)

The hydraulic system driving the reels is designed to operate on anti−wear hydraulic fluid. The machines reservoir is filled at the factory with approximately 3.5 gallons of DTE 15M hydraulic fluid. **Check level of hydraulic fluid before engine is first started and daily thereafter.**

IMPORTANT: Use only types of hydraulic fluids specified. Other fluids could cause system damage.

Note: A red dye additive for the hydraulic system fluid is available in 2/3 oz. bottles. One bottle is sufficient for 4−6 gal. of hydraulic fluid. Order Part No. 44−2500 from your Authorized Toro Distributor.

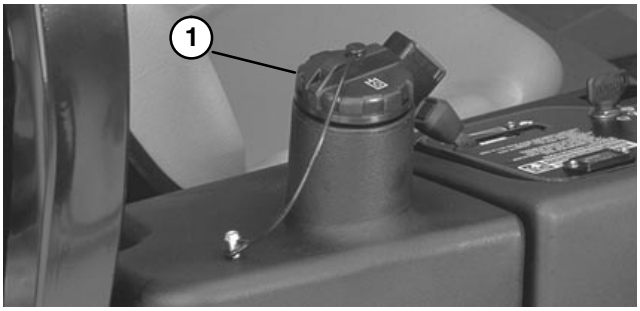

Figure 33
1. Hydraulic Tank Cap

1. Position machine on a level surface, lower the cutting units and stop the engine.

2. Clean area around filler neck and cap of hydraulic tank. Remove cap from filler neck.

3. Remove dipstick from filler neck and wipe it with a clean rag. Insert dipstick into filler neck; then remove it and check level of fluid. Fluid level should be within 1/4 inch of mark on dipstick.

4. If level is low, add appropriate fluid to raise level to full mark.

5. Install dipstick and cap onto filler neck.

CHECK TIRE PRESSURE

The tires are over−inflated for shipping. Therefore, release some of the air to reduce the pressure. Correct air pressure in tires is 14 −18 psi.

IMPORTANT: Maintain recommended pressure in all tires to assure a good quality−of−cut and proper machine performance. DO NOT UNDER INFLATE.

CHECK REEL TO BEDKNIFE CONTACT

Each day before operating, check reel to bedknife contact, regardless if quality of cut had previously been acceptable. There must be light contact across the full length of the reel and bedknife (refer to Adjusting Reel to Bedknife in Cutting Unit Operator's Manual).

CHECK TORQUE OF WHEEL NUTS

WARNING

Torque wheel nuts to 45-65 ft−lb after 1-4 hours of operation and again after 10 hours of operation and every 200 hours thereafter. Failure to maintain proper torque could result in failure or loss of wheel and may result in personal injury.

CONTROLS

Traction Pedals (Fig. 34) — Depress traction forward pedal to move forward. Depress traction reverse pedal to move backward or to assist in stopping when moving forward. Also, allow pedal to move or move it to neutral position to stop machine.

Mow/Transport Slide (Fig. 34) – Using your heel, move slide to the left to transport and to the right to mow. **The cutting units will only operate in the mow position.**

Note: Mow speed is set at the factory to 6 mph. It can be increased or decreased by adjusting the speed stop screw (Fig. 35)

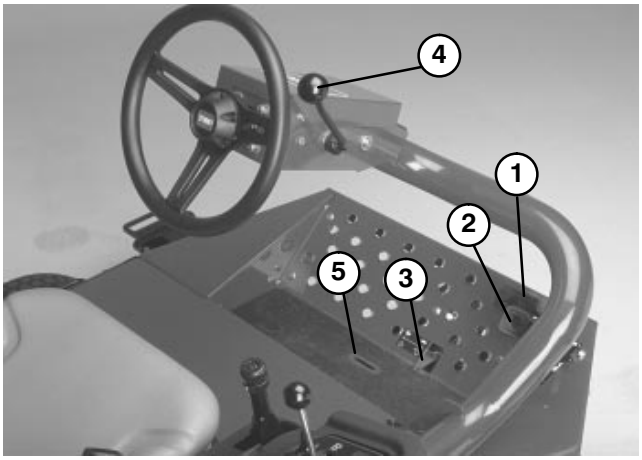

Figure 34

1. Forward traction pedal
2. Reverse traction pedal
3. Mow/Transport slide
4. Tilt steering lever
5. Indicator slot

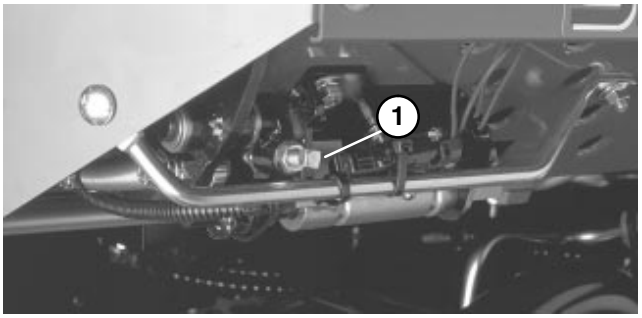

Figure 35

1. Speed Stop Screw

Tilt Steering Lever (Fig. 34) – Pull lever back to loosen to tilt the steering wheel to desired position. Then push lever forward to tighten.

Starter Switch (Fig. 36) — The starter switch, used to start, stop and preheat the engine, has three positions: OFF, ON/PREHEAT and START. Rotate key to ON/PREHEAT position until glow plug indicator light goes out (approximately 7 seconds), then rotate key to START position to engage starter motor. Release key when engine starts. The key will move automatically to the ON/RUN position. To shut engine off, rotate key to OFF position. Remove key from switch to prevent accidental starting.

Throttle (Fig. 36) — Moving throttle forward increases engine speed, rearward decreases engine speed.

Cutting Unit Shift Lever (Fig. 36) – To lower cutting units to the ground, move lift lever forward. Cutting units will not drop unless engine is running and will not operate in raised position. To raise cutting units, pull lift lever rearward to the RAISE position.
Model 03201 only– Move lever to the right or left to move cutting units in same direction. This should only be done when cutting units are raised or if they're on the ground and the machine is moving.

Note: Lever does not have to be held in forward position while cutting units are lowered.

Indicator Slot (Fig. 34) – The slot in the operator's platform indicates when the cutting units are in the center position.

Cutting Unit Drive Switch (Fig. 36) — The switch has two positions: ENGAGE and DISENGAGE. Rocker switch operates a solenoid valve, on valve bank, to drive cutting units.

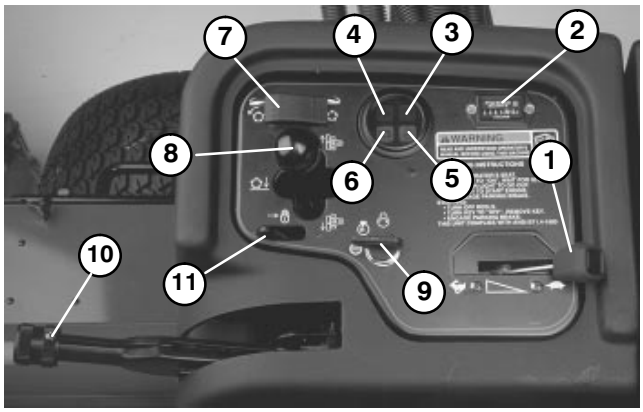

Figure 36

1. Throttle
2. Hour meter
3. Temperature light
4. Oil pressure light
5. Glow plug indicator light
6. Alternator light
7. Cutting unit drive switch
8. Cutting unit shift lever
9. Ignition switch
10. Parking brake
11. Lift lever lock

Hour Meter (Fig. 36) — Indicates the total hours of machine operation. The Hour Meter starts to function whenever the key switch is ON.

Engine Coolant Temperature Warning Light (Fig. 36) — Light glows if engine coolant temperature is high. If traction unit is not stopped and coolant temperature rises another 10° F., the engine will kill.

Oil Pressure Warning Light (Fig. 36) — Light glows if engine oil pressure drops below a safe level.

Alternator Light (Fig. 36) — The amp light should be off when engine is running. If it is on, the charging system should be checked and repaired as necessary.

Glow Plug Indicator (Fig. 36) — Indicator light will glow when glow plugs are operating.

CONTROLS

Parking Brake (Fig. 36) — Whenever the engine is shut off, the parking brake must be engaged to prevent accidental movement of the machine. To engage the parking brake, pull up on lever. Engine will stop if traction pedal is depressed with parking brake engaged.

Lift Lever Lock (Fig. 36) — Move lever rearward to prevent cutting units from dropping.

Reel Speed Control – (Fig. 37) — (Located under console cover) – To obtain the desired clip rate (reel speed), rotate reel speed control knob to appropriate setting for height–of–cut setting and mower speed. Refer to Selecting Clip Rate section of Manual.

Backlap Control – (Fig. 37) — (Located under console cover) – Rotate knob clockwise for backlapping and counterclockwise for mowing. Do not change knob position when reels are rotating.

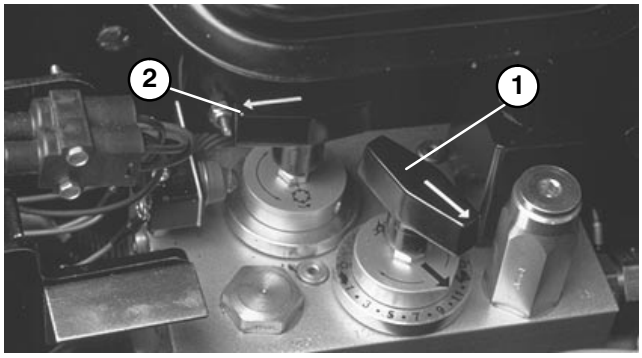

Figure 37

1. **Reel speed control**
2. **Backlap control**

Fuel Gauge (Fig. 38) — Registers amount of fuel in tank.

Seat Adjustments (Fig. 38)

Fore and Aft Adjustment — Move lever on side of seat outward, slide seat to desired position and release lever to lock seat into position.

Deluxe Seat Adjustments

Weight Adjustment — Push lever up or down to adjust to operator's weight. Lever up — light operator, lever in middle position — medium weight operator or lever down for heavy operator.

Inclining Backrest — Turn handle to adjust angle of backrest.



Figure 38

1. **Fore and aft lever**
2. **Fuel gauge**

OPERATING INSTRUCTIONS

STARTING/STOPPING ENGINE

IMPORTANT: The fuel system may have to be bled if any of the following situations have occurred:

A. Initial start up of a new engine.

B. Engine has ceased running due to lack of fuel.

C. Maintenance has been performed upon fuel system components; i.e. filter replaced, etc.

Refer to Bleeding Fuel System

1. Be sure parking brake is set and Reel Drive switch is in DISENGAGE position.

2. Remove foot from traction pedal and make sure pedal is in neutral position.

3. Move throttle lever to 1/2 throttle position.

4. .Insert key into switch and rotate it to ON/PREHEAT position until glow plug indicator light goes out (approximately 7 seconds), then rotate key to START position to engage starter motor. Release key when engine starts. The key will move automatically to the ON/RUN position.

IMPORTANT: To prevent overheating of the starter motor, do not engage starter longer than 15 seconds. After 10 seconds of continuous cranking, wait 60 seconds before engaging starter motor again.

5. When engine is started for the first time, or after overhaul of the engine, operate the machine in forward and reverse for one to two minutes. Also operate the lift lever and reel drive switch to be sure of proper operation of all parts.

Turn steering wheel to the left and right to check steering response. Then shut engine off and check for oil leaks, loose parts and any other noticeable malfunctions.

CAUTION

Shut engine off and wait for all moving parts to stop before checking for oil leaks, loose parts and other malfunctions.

6. To stop engine, move throttle control to IDLE position, move reel drive switch to DISENGAGE and rotate starter key to OFF. Remove key from switch to prevent accidental starting.

BLEEDING FUEL SYSTEM (Fig. 39)

1. Park the machine on a level surface. Make sure fuel tank is at least half full.

2. Unlatch and raise hood.

DANGER

Because diesel fuel is flammable, use caution when storing or handling it. Do not smoke while filling the fuel tank. Do not fill fuel tank while engine is running, hot, or when machine is in an enclosed area. Always fill fuel tank outside and wipe up any spilled diesel fuel before starting the engine. Store fuel in a clean, safety−approved container and keep cap in place. Use diesel fuel for the engine only; not for any other purpose.

3. Open the air bleed screw on the fuel injection pump (Fig. 39).

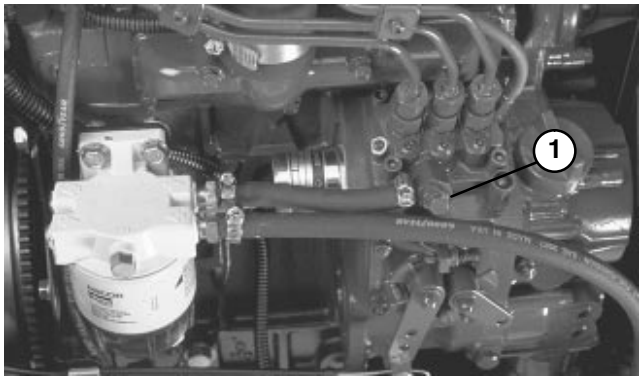

Figure 39

1. Fuel injection pump bleed screw

4. Turn key in ignition switch to the ON position. Electric fuel pump will begin operation, thereby forcing air out around air bleed screw. Leave key in ON position until solid stream of fuel flows out around screw. Tighten screw and turn key to OFF.

Note: Normally, engine should start after above bleeding procedures are followed. However, if engine does not start, air may be trapped between injection pump and injectors; refer to Bleeding Air From Injectors.

OPERATING INSTRUCTIONS

CHECK OPERATION OF INTERLOCK SWITCHES

CAUTION

Do not disconnect the safety switches because they are for the operator's protection. Check operation of the switches daily to be sure the interlock system is operating correctly. If a switch is not operating properly, replace it before operating the machine. Replace the switches every two years to be sure of maximum safety.

1. Make sure all bystanders are away from the area of operation. Keep hands and feet away from cutting units.

2. With operator on seat, the engine must not start with either reel switch engaged or traction pedal engaged. Correct problem if not operating properly.

3. With operator on the seat, traction pedal in neutral, parking brake off and reel switch in OFF position, the engine should start. Lift off the seat and slowly depress the traction pedal, the engine should stop in one to three seconds. Correct problem if not operating properly.

4. With operator on the seat, engine running, reel transport slide in mow and reel switch in ON position, lower cutting units. Reels should come on. Pull back on the lift lever, the reels should stop when fully raised. Correct problem if not operating properly.

Note: The machine is equipped with an interlock switch on the parking brake. Engine will stop if traction pedal is depressed with parking brake engaged.

TOWING TRACTION UNIT (Fig. 40)

In case of emergency, the Reelmaster can be towed for a short distance. However, Toro does not recommend this as a standard procedure.

IMPORTANT: Do not tow the machine faster than 2–3 mph because drive system may be damaged. If machine must be moved a considerable distance, transport it on a truck or trailer.

1. Locate by–pass valve on pump and rotate it 90°.

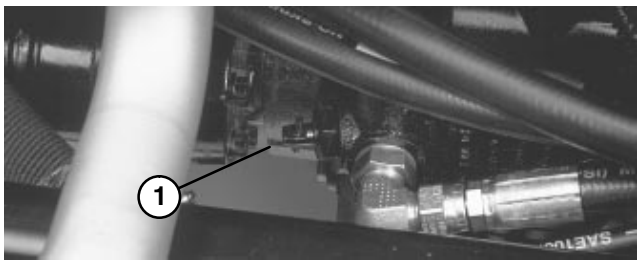

Figure 40
1. By–pass valve

2. Before starting engine, close by–pass valve by rotating it 90°. Do not start engine when valve is open.

OPERATING CHARACTERISTICS

DANGER

The mower has a unique traction system that will allow the machine to move forward on side hills, even if the uphill wheel should come of the ground. If this should happen, the operator or any bystanders can be seriously injured or killed in a rollover.

The slope angle at which the machine will tip is dependent on many factors. Among these are mowing conditions such as wet or undulating turf, speed (especially in turns), position of the cutting units (with Sidewinder) tire pressure and operator experience.

At side hill angles of 20 degrees or less the risk of a rollover is low. As the slope angle increases to a Toro recommended maximum limit of 25 degrees the risk of a rollover increases to a moderate level. DO NOT EXCEED A 25 DEGREE SIDE HILL SLOPE ANGLE BECAUSE THE RISK OF A ROLLOVER AND SERIOUS INJURY OR DEATH IS VERY HIGH.

To determine which hills or slopes may be safely operated on, a site survey of the mowing area must be done. When performing this site survey always use common sense and take into consideration the turf condition and the rollover risk. To determine which hills or slopes may be safely operated on use the inclinometer provided with each machine. To perform a site survey, lay a 4' two by four on the slope surface and measure the angle of the slope. The 2 by 4 will average the slope but will not take into consideration dips or holes. THE MAXIMUM SIDE HILL ANGLE SHOULD NOT BE GREATER THAN 25 DEGREES.

OPERATING INSTRUCTIONS

Practice operating the Reelmaster and become thoroughly familiar with it.

Start the engine and run it at half idle until it warms up. Push the throttle lever all the way forward, lift the cutting units, disengage the parking brake, press the forward traction pedal and carefully drive off to an open area.

Practice going both forward and in reverse, starting and stopping the machine. To stop, take your foot off the traction pedal and let it return to neutral or press down on the reverse pedal to stop. Going down a hill, you may need to use the reverse pedal to stop.

When driving on slopes, drive slowly to maintain steering control and avoid turns to prevent rollovers. In side hill situations you should shift the sidewinder cutting units to the up hill side to give you more stability. Conversely, shifting the cutting units to the down hill side will give you less stability. This should always be done before going on a side hill.

When possible, mow up and down hills rather than across them. Have the cutting units lowered when going down a hill to maintain steering control. Do not attempt to turn on a hill.

Practice driving around obstacles with the reels up and down. Be careful when driving between narrow objects so you don't damage the machine or cutting units.

On the Sidewinder unit, get a feel for the reach of the cutting units so you don't hang them up or damage them in any way.

Don't shift the units from side to side, unless the cutting units are down and the machine is moving, or the cutting units are up in the transport position. Shifting the cutting units when they are down while not moving may cause turf damage.

The Reelmaster is a precision mowing machine, so always drive slowly in rough areas.

If a person appears in or near the operating area, stop the machine, and don't start up again until the area is cleared. The Reelmaster is a one−person machine. Never let anyone else ride on the machine with you. This is extremely dangerous and could result in serious injury.

Accidents can happen to anyone. The most common causes are excessive speed, sudden turns, terrain (with the Reelmaster 3100−D that's knowing what slopes and hills can be mowed safely), not stopping the engine before leaving the operator's seat, and drugs which impair your alertness. Cold capsules or prescription drugs may cause drowsiness, as can alcohol and other drugs. Stay alert and stay safe. Failure to do so could result in serious injury.

The Sidewinder offers up to a maximum of 23 inches of overhang, allowing you to trim closer to the edge of traps and other obstacles, while at the same time keeping the tractor tires as far away from the edge of traps or water hazards as possible.

If an obstacle is in the way, shift the cutting units to easily mow around it.

CAUTION: This product may exceed noise levels of 85 dB(A) at the operator position. Ear protectors are recommended for prolonged exposure to reduce the potential of permanent hearing damage.

When transporting the machine from one work area to another, raise cutting units to the fully up position, move Mow/Transport slide to the left to transport and place throttle in FAST position. **(The cutting units will not operate in transport.)**

MOWING TECHNIQUES

To begin cutting, engage the reels, then approach the mowing area slowly. Once the front reels are over the mowing area, lower the cutting units.

To achieve the professional straight line cut and striping that is desirable for some applications, find a tree or other object in the distance and drive straight toward it.

As soon as the front reels reach the edge of the mowing area, lift the cutting units and perform a tear drop turn, to quickly line you up for your next pass.

Mowing around bunkers ponds or other contours is easily done with The Reelmaster 3100−D with Sidewinder. To use the Sidewinder application, move the control lever left or right, depending on your mowing application. The cutting units can also be shifted to vary tire tracking.

The Reelmaster 3100−D cutting units can throw clippings to the front or rear. Front throw should be used when cutting off smaller amounts of grass; thus, leaving a better after cut appearance. To throw clippings to the front, simply close the rear shield on the cutting units.

CAUTION

Shut engine off and wait for all moving parts to stop before opening or closing cutting unit shields.

When cutting off larger amounts of grass, the shields shown be positioned to just below horizontal. **Do not open the shields too far or excessive clippings can build up on the frame, rear radiator screen and engine area.**

The cutting units are also equipped with balance weights, on the non−motor end, to give an even cut. Weights can be added or removed if mismatch occurs on your turf.

OPERATING INSTRUCTIONS

AFTER MOWING

At the completion of mowing operation, thoroughly wash the machine with a garden hose – without a nozzle – so excessive water pressure will not cause contamination and damage to seals and bearings. Make sure radiator and oil cooler are kept free of dirt or grass clippings. After cleaning, it is recommended the machine be inspected for possible hydraulic fluid leaks, damage or wear to hydraulic and mechanical components and the cutting units checked for sharpness and proper reel to bedknife adjustment.

IMPORTANT: After wash down, move the Sidewinder mechanism (model 03201 only) from left to right several times to remove water between bearing blocks and cross tube.

SELECTING CLIP RATE (REEL SPEED)

To achieve a consistent, high quality of cut, and a uniform after cut appearance, it is important that the reel speed be matched to the height of cut.

IMPORTANT: If reel speed is too slow, clip marks may be visible. If reel speed is too fast the cut may have a fuzzy appearance.

Adjust the clip rate (reel speed) as follows:

1. Verify the height−of−cut setting on the cutting units. Using the column of the chart listing either 5 or 8 blade reels, find the height of cut listing nearest the actual height−of−cut setting. Look across the chart to find the number corresponding to that height of cut.

Note: The higher the number, the higher the speed.

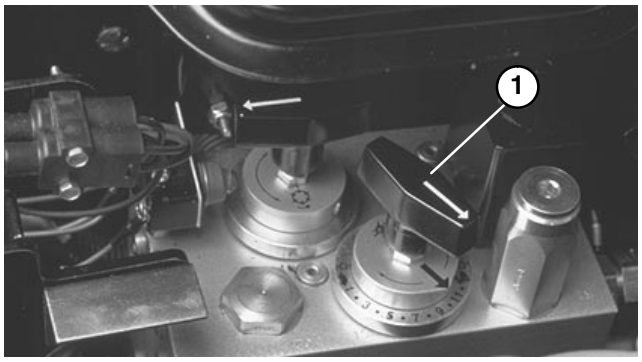

Figure 41
1. Reel speed control

2. Turn the reel speed control knob to the number setting determined in step 1.

3. Operate the machine for several days, then examine the cut to ensure satisfaction with the quality of cut. The reel speed knob may be set one position on either side of the position indicated on the chart to account for differences in grass condition, grass length removed and personal preference.

5 BLADE REEL

REEL SPEED SELECTION CHART			
HEIGHT OF CUT		5 MPH	6 MPH
2−1/2	2.50	3	3
2−3/8	2.38	3	4
2−1/4	2.25	3	4
2−1/8	2.13	3	4
2	2.00	3	4
1−7/8	1.88	4	5
1−3/4	1.75	4	5
1−5/8	1.63	5	6
1−1/2	1.50	5	7
1−3/8	1.38	5	8
1−1/4	1.25	6	11
1−1/8	1.13	8	11*
1	1.00	11	11*
7/8	0.88	11*	11*
3/4	0.75	11*	11*
5/8	0.63	11*	11*
1/2	0.50	11*	11*
3/8	0.38	11*	11*

*** This height−of−cut and/or mowing speed not recommended for 5 blade reels.**

8 BLADE REEL

REEL SPEED SELECTION CHART			
HEIGHT OF CUT		5 MPH	6 MPH
2−1/2	2.50	3*	3*
2−3/8	2.38	3*	3*
2−1/4	2.25	3*	3*
2−1/8	2.13	3*	3*
2	2.00	3*	3*
1−7/8	1.88	3*	3*
1−3/4	1.75	3*	3*
1−5/8	1.63	3*	3*
1−1/2	1.50	3	4
1−3/8	1.38	3	4
1−1/4	1.25	4	4
1−1/8	1.13	4	5
1	1.00	5	6
7/8	0.88	5	7
3/4	0.75	7	11
5/8	0.63	11	11*
1/2	0.50	11	11*
3/8	0.38	11	11*

*** This height−of−cut and/or mowing speed not recommended for 8 blade reels.**

Note: Positions 9 to 11 give the same reel speed.

DAILY MAINTENANCE CHECKLIST

Daily Maintenance: (duplicate this page for routine use)
Check proper section of Operator's Manual for fluid specifications

Maintenance Check Item ➧	**Daily Maintenance Check For Week Of _____**						
	MON	TUES	WED	THURS	FRI	SAT	SUN
✓ Safety Interlock Operation							
✓ Brake Operation							
✓ Engine Oil Level							
✓ Cooling System Fluid Level							
Drain Water/Fuel Separator							
✓ Air Filter, Dust Cup & Burp Valve							
✓ Radiator & Screen for Debris							
✓ Unusual Engine Noises[1]							
✓ Unusual Operating Noises							
✓ Hydraulic System Oil Level							
✓ Hydraulic Hoses for Damage							
✓ Fluid Leaks							
✓ Fuel Level							
✓ Tire Pressure							
✓ Instrument Operation							
✓ Reel–to–Bedknife Adjustment							
✓ Height–of–Cut Adjustment							
Lubricate All Grease Fittings[2]							
Touch–up Damaged Paint							

[1]= Check glow plug and injector nozzles, if hard starting, excess smoke or rough running is noted.
[2]= Immediately after every washing, regardless of the interval listed.

Notation for areas of concern: Inspection performed by_____

Item	Date	Information
1		
2		
3		
4		
5		
6		
7		
8		

MAINTENANCE SCHEDULE

Minimum Recommended Maintenance Intervals

Maintenance Procedure	Maintenance Interval & Service				
	Every 50hrs	Every 100hrs	Every 200hrs	Every 400hrs	Every 800hrs
Inspect Air Filter, Dust Cup and Burp Valve	●	●	●	●	●
Lubricate All Grease Fittings	●	●	●	●	●
Change Engine Oil	●	●	●	●	●
Check Battery Cable Connections	●	●	●	●	●
† Check Fan and Alternator Belt Tensions	●	●	●	●	●
Check Battery Fluid Level	●	●	●	●	●
‡ Change Engine Oil and Filter		●	●	●	●
Inspect Traction Belt		●	●	●	●
Replace Air Filter			●	●	●
† Replace Hydraulic Filter			●	●	●
† Torque Wheel Lug Nuts			●	●	●
Replace Hydraulic Fluid					●
Replace Fuel/Water Separator Filter					●
Replace Fuel Pre Filter					●
Inspect Traction Cable Movement					●
Inspect Spider Coupling for Wear					●
‡ Check Engine RPM (idle and full throttle)					●
Adjust Valves					●

† Initial break in at 10 hours

‡ Initial break in at 50 hours

Replace all Moving Hoses
Replace Safety Switches
Cooling System – Flush/Replace Fluid
Fuel Tank – Drain/Flush
Hydraulic Tank – Drain/Flush

Annual Recommendations:
Items listed are recommended every 1000 hours or 2 years, whichever occurs first.

LUBRICATION

GREASING BEARINGS AND BUSHINGS

(Fig. 42–53)

The traction unit has grease fittings that must be lubricated regularly with No. 2 General Purpose Lithium Base Grease. If machine is operated under normal conditions, lubricate bearings and bushings after every 50 hours of operation. Bearings and bushings must be lubricated daily when operating conditions are extremely dusty and dirty. Dusty and dirty operating conditions could cause dirt to get into the bearings and bushings, resulting in accelerated wear. Lubricate bearings and bushings immediately after every washing, regardless of the interval listed.

The traction unit bearings and bushings that must be lubricated are: Rear cutting unit pivot (Fig. 42), Front cutting unit pivot (Fig. 43), SideWinder cylinder ends (2) (Model 03201 only) (Fig. 44), Steering pivot (Fig. 45), Rear lift arm pivot and lift cylinder (2) (Fig. 46), Left front lift arm pivot and lift cylinder (2) (Fig. 47), Right front lift arm pivot and lift cylinder (2) (Fig. 48), Neutral adjust mechanism (Fig. 49), Mow/Transport slide (Fig. 50), Belt tension pivot (Fig. 51) Steering cylinder (Fig. 52).

Note: If desired, an additional grease fitting may be installed in other end of steering cylinder. Tire must be removed, fitting installed, greased, fitting removed and plug installed (Fig. 53).

IMPORTANT: Do not lubricate Sidewinder (model 03201) cross tube, bearing blocks are self lubricated.

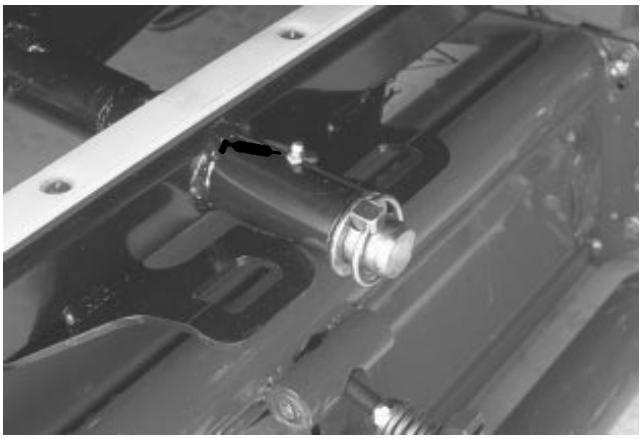

Figure 42



Figure 43

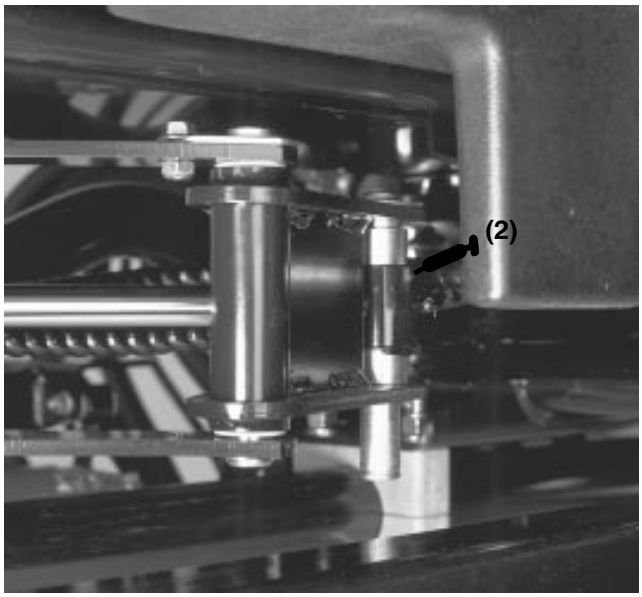

Figure 44

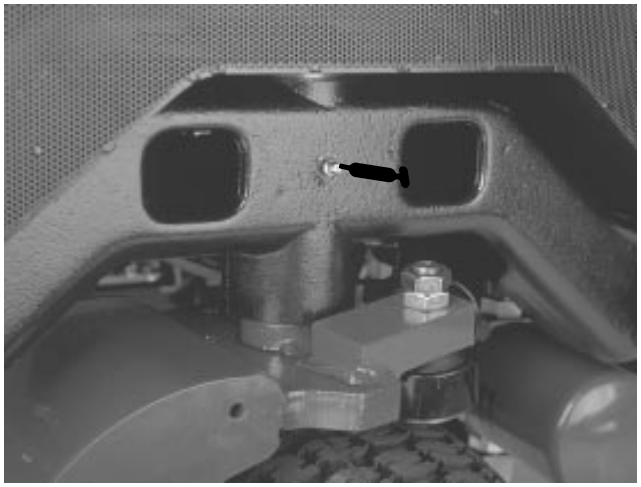

Figure 45

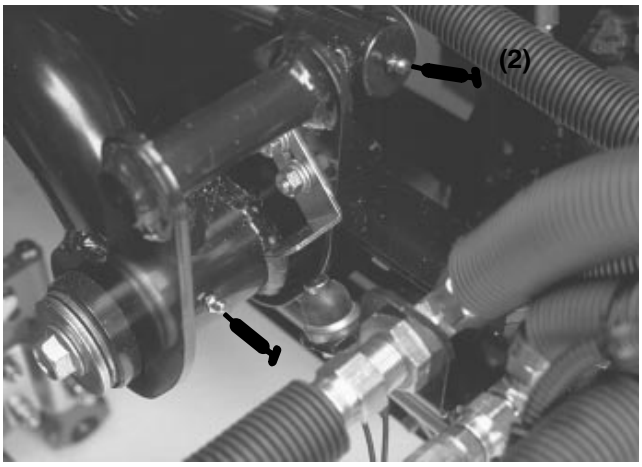

Figure 46

LUBRICATION

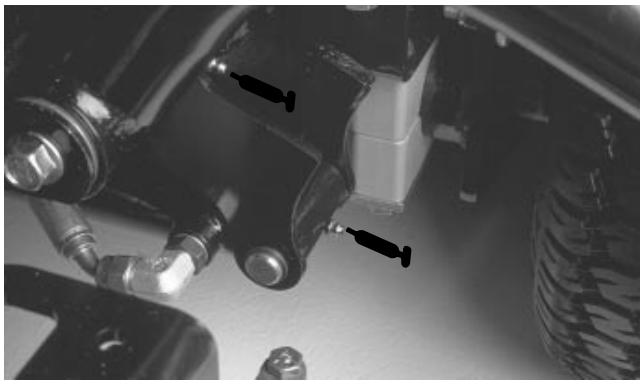

Figure 47

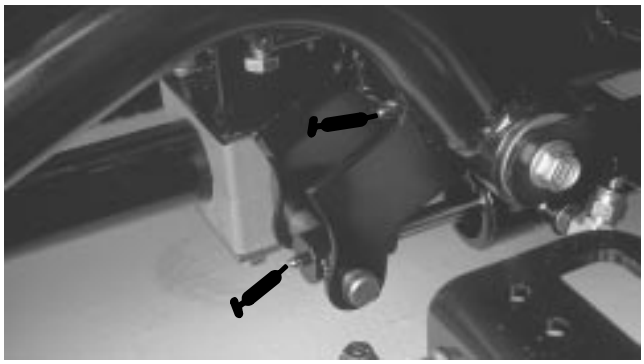

Figure 48

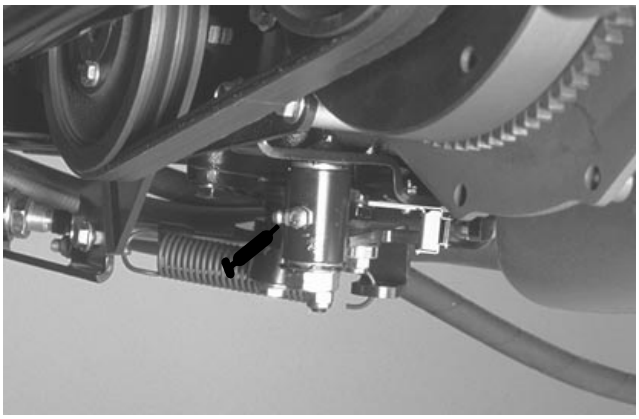

Figure 49

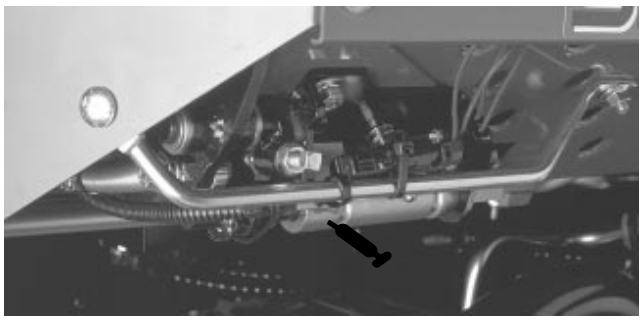

Figure 50

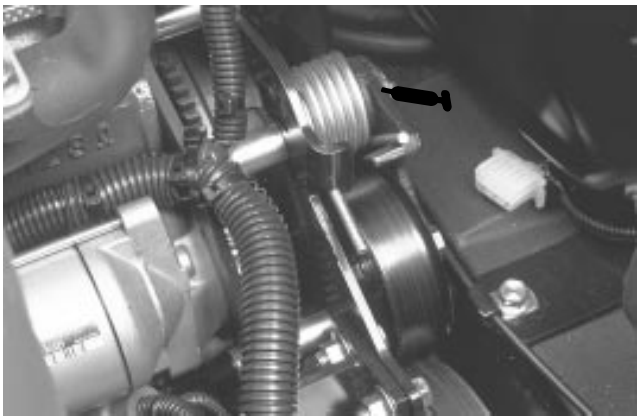

Figure 51

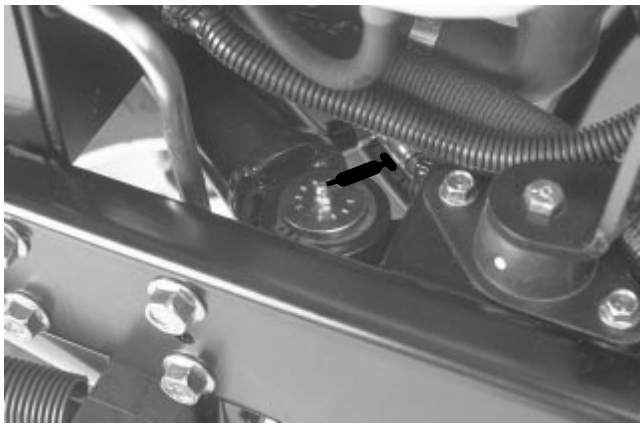

Figure 52



Figure 53 (See note)

CAUTION

Before servicing or making adjustments to the machine, stop engine and remove key from the switch.

HOOD REMOVAL (Fig. 54)

Hood may be easily removed to ease maintenance procedures in engine area of machine.

1. Unlatch and raise hood.

2. Remove cotter pin securing hood pivot to mounting brackets.

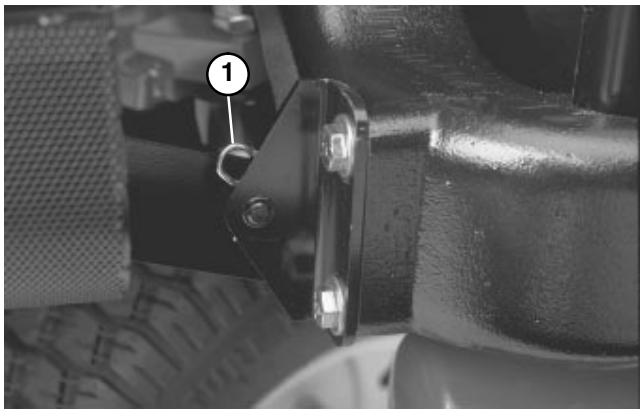

Figure 54

1. Cotter pin

3. Slide hood to right side, lift other side and pull out of brackets.

4. Reverse procedure to reinstall hood.

AIR CLEANER MAINTENANCE

GENERAL AIR CLEANER MAINTENANCE

1. Check air cleaner body for damage which could possibly cause an air leak. Replace a damaged air cleaner body.

2. Service the air cleaner filter every 200 hours (more frequently in extreme dusty or dirty conditions). Do not over service air filter.

3. Be sure cover is sealing around air cleaner body.

SERVICING AIR CLEANER (Fig. 55 & 56)

1. Release latches securing air cleaner cover to air cleaner body. Separate cover from body. Clean inside of air cleaner cover.

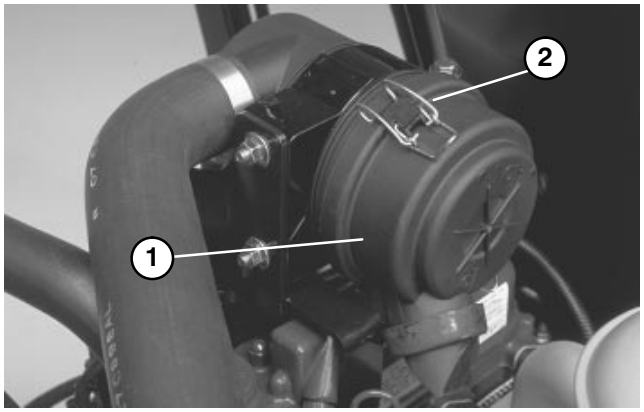

Figure 55
1. **Air cleaner dust cup**
2. **Air cleaner latches**

2. Gently slide filter out of air cleaner body to reduce the amount of dust dislodged. Avoid knocking filter against air cleaner body.

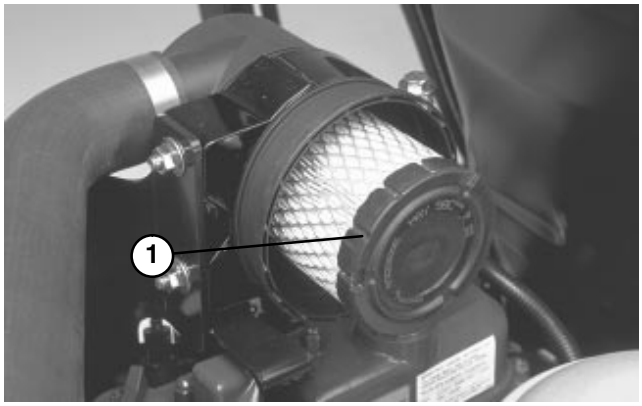

Figure 56
1. **Filter element**

3. Inspect filter and discard if damaged. Do not wash or reuse a damaged filter.

Washing Method

A. Prepare a solution of filter cleaner and water and soak filter element about 15 minutes. Refer to directions on filter cleaner carton for complete information.

B. After soaking filter for 15 minutes, rinse it with clear water. Maximum water pressure must not exceed 40 psi to prevent damage to the filter element. Rinse filter from clean side to dirty side.

C. Dry filter element using warm, flowing air (160°F) max), or allow element to air−dry. Do not use a light bulb to dry the filter element because damage could result.

Compressed Air Method

A. Blow compressed air from inside to the outside of dry filter element. Do not exceed 100 psi to prevent damage to the element.

B. Keep air hose nozzle at least 2” from filter and move nozzle up and down while rotating the filter element. Inspect for holes and tears by looking through the filter toward a bright light.

4. Inspect new filter for shipping damage. Check sealing end of filter. Do not install a damaged filter.

5. Insert new filter properly into air cleaner body. Make sure filter is sealed properly by applying pressure to outer rim of filter when installing. Do not press on flexible center of filter.

6. Reinstall cover and secure latches. Make sure cover is positioned with TOP side up.

ENGINE MAINTENANCE

ENGINE OIL AND FILTER (Fig. 57 & 58)

Change oil and filter initially after the first 50 hours of operation, thereafter change oil every 50 hours and filter every 100 hours.

1. Remove either drain plug and let oil flow into drain pan. When oil stops, install drain plug.

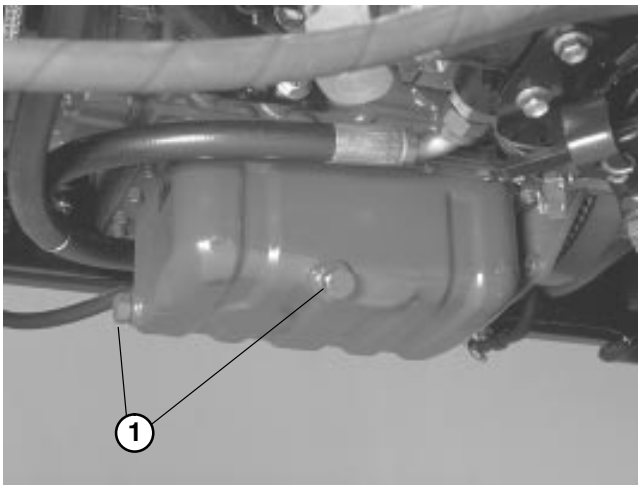

Figure 57
1. Engine Oil Drain Plug

2. Remove oil filter. Apply a light coat of clean oil to the new filter seal before screwing it on. DO NOT OVER−TIGHTEN.

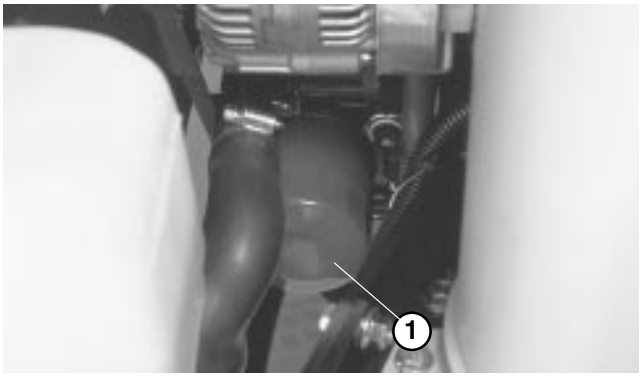

Figure 58
1. Engine Oil Filter

3. Add oil to crankcase, refer to Check Engine Oil.

FUEL SYSTEM

Fuel Tank

Drain and clean fuel tank every 2 years. Also, drain and clean tank if fuel system becomes contaminated or if machine is to be stored for an extended period. Use clean fuel to flush out the tank.

Fuel Lines and Connections

Check lines and connections every 400 hours or yearly, whichever comes first. Inspect for deterioration, damage, or loose connections.

Water Separator (Fig. 59)

Drain water or other contaminants from water separator (Fig. 59) daily.

1. Place a clean container under fuel filter.

2. Loosen drain plug on bottom of filter canister. Tighten plug after draining.

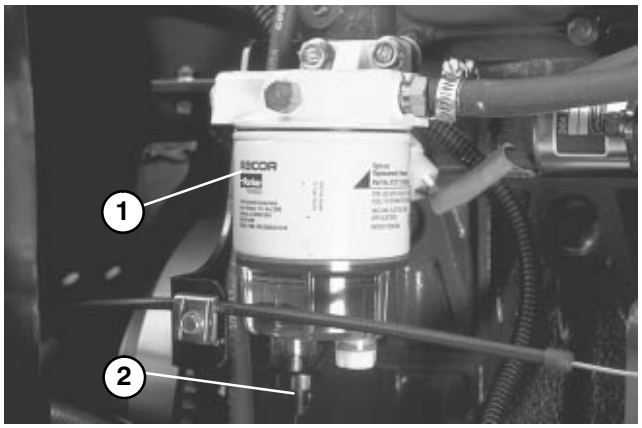

Figure 59
1. Water Separator
2. Drain Plug

Replace filter canister after every 400 hours of operation.

1. Clean area where filter canister mounts.

2. Remove filter canister and clean mounting surface.

3. Lubricate gasket on filter canister with clean oil.

4. Install filter canister by hand until gasket contacts mounting surface, then rotate an additional 1/2 turn.

Replacing Fuel Pre Filter (Fig. 60)

Replace the fuel pre filter, located on inside of frame rail below water separator after every 400 operating hours or yearly, whichever occurs first.

1. Remove screw securing filter to frame rail.

2. Clamp both fuel lines that connect to the fuel filter so fuel cannot drain when lines are removed.

3. Loosen the hose clamps at both ends of the filter and pull fuel lines off filter.

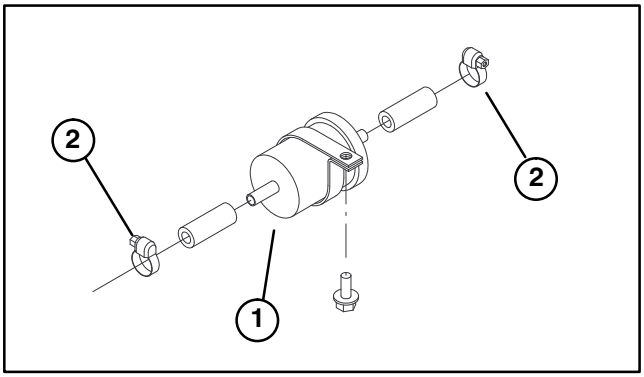

Figure 60
1. Fuel Pre Filter
2. Hose Clamps

4.. Slide hose clamps onto ends of fuel lines. Push fuel lines onto fuel filter and secure them with hose clamps. Be sure arrow on side of filter points toward the injection pump.

DANGER

Because diesel fuel is flammable, use caution when storing or handling it. Do not smoke while filling the fuel tank. Do not fill fuel tank while engine is running, hot, or when machine is in an enclosed area. Always fill fuel tank outside and wipe up any spilled diesel fuel before starting the engine. Store fuel in a clean, safety−approved container and keep cap in place. Use diesel fuel for the engine only; not for any other purpose.

BLEEDING AIR FROM INJECTORS (Fig. 61)

Note: This procedure should be used only if fuel system has been purged of air through normal priming procedures and engine will not start; refer to Bleeding Fuel System.

1. Loosen the pipe connection to the No. 1 nozzle and holder assembly.

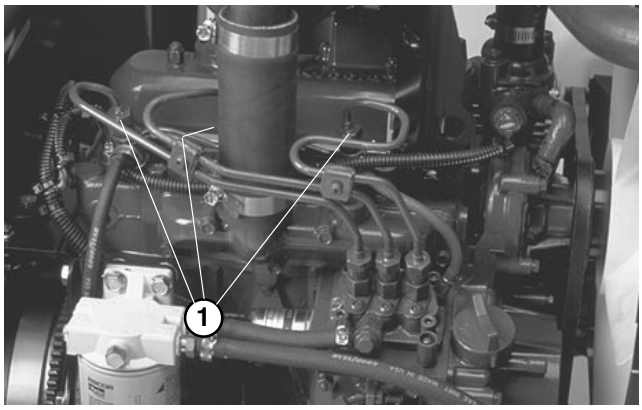

Figure 61
1. Fuel Injectors (3)

2. Move throttle to FAST position.

3. Turn key in key switch to START position and watch fuel flow around connector. Turn key to OFF position when solid flow is observed.

4. Tighten pipe connector securely.

5. Repeat steps on remaining nozzles.

ENGINE COOLING SYSTEM (Fig. 62 & 63)

1. Removing Debris – Remove debris from oil cooler and radiator daily, clean more frequently in dirty conditions.

A. Turn engine off and raise hood. Clean engine area thoroughly of all debris.

B. Remove access panel.

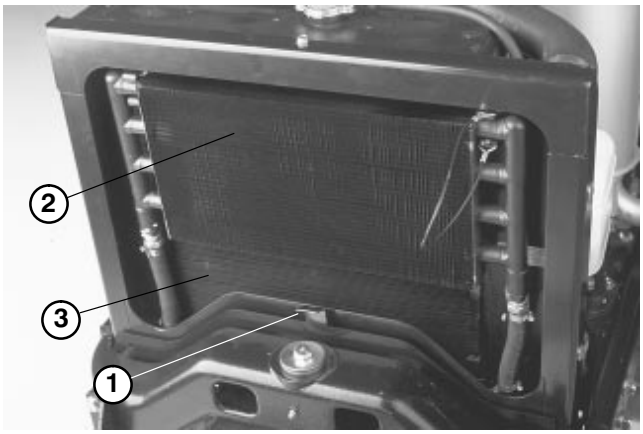

Figure 62
1. Access panel
2. Oil cooler
3. Radiator

C. Remove access panel. Unlatch oil cooler and pivot rearward. Clean both sides of oil cooler and radiator area thoroughly with water or compressed air. Pivot oil cooler back into position.



Figure 63

D. Install access panel and close hood.

SERVICING ENGINE BELTS

Check condition and tension of all belts after first day of operation and every 100 operating hours thereafter.

Alternator/fan Belt (Fig. 64)

1. Open hood.

2. Check tension by depressing belt midway between alternator and crankshaft pulleys with 22 lb. of force. Belt should deflect 7/16 in. If deflection is incorrect, proceed to step 3. If correct, continue operation.

3. Loosen bolt securing brace to engine and bolt securing alternator to brace.

4. Insert pry bar between alternator and engine and pry out on alternator.

5. When proper tension is achieved, tighten alternator and brace bolts to secure adjustment.

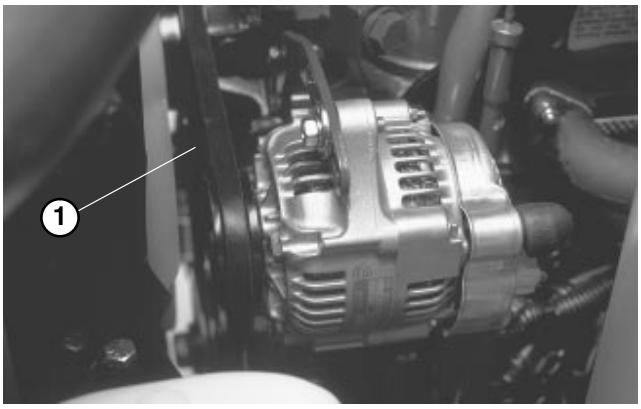

Figure 64

1. Alternator/fan Belt

Hydrostat Drive Belt Replacement (Fig. 65)

1. Insert a nut driver or small piece of tubing onto end of belt tensioning spring.

WARNING

Use caution when de−tensioning spring as it is under heavy load.

2. Push down and forward on spring end to unhook from bracket and release tension on spring.

3. Replace belt.

4. Reverse procedure to tension spring.

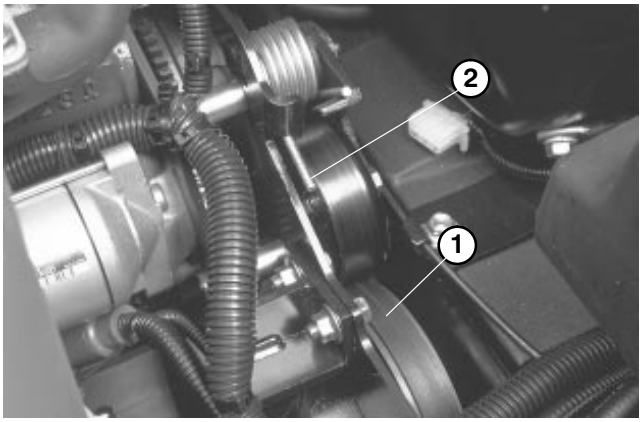

Figure 65

1. Hydrostat Drive Belt
2. Spring end

ADJUSTING THROTTLE (Fig. 66)

1. Position throttle lever rearward so it stops against control panel slot.

2. Loosen the throttle cable connector on the lever arm at the injection pump.

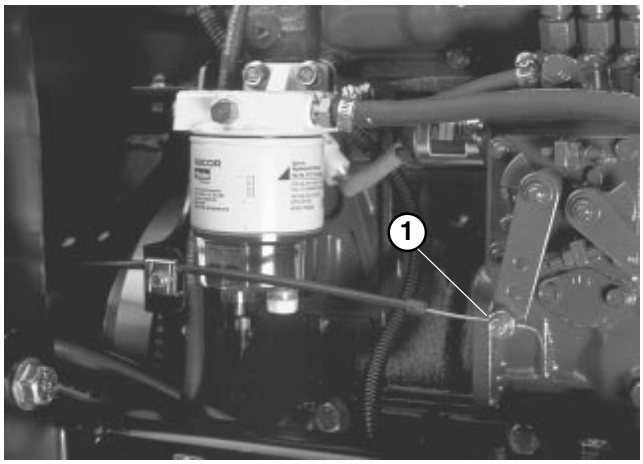

Figure 66

1. Injection Pump Lever Arm

3. Hold the injection pump lever arm against the low idle stop and tighten the cable connector.

4. Loosen screws securing throttle control to control panel.

5. Push throttle control lever all the way forward.

6. Slide stop plate until it contacts throttle lever and tighten screws securing throttle control to control panel.

7. If throttle does not stay in position during operation, torque the lock nut, used to set the friction device on the throttle lever, to 40 – 55 in. lb. The maximum force required to operate the throttle lever should be 20 lb.

HYDRAULIC MAINTENANCE

CAUTION

Before servicing or making adjustments to the machine, stop engine and remove key from the switch.

CHANGING HYDRAULIC FLUID (Fig. 67 – 69)

Change hydraulic fluid after every 400 operating hours, in normal conditions. If fluid becomes contaminated, contact your local TORO distributor because the system must be flushed. Contaminated fluid looks milky or black when compared to clean oil.

1. Turn engine off and raise hood.

2. Disconnect hydraulic line or remove hydraulic filter and let hydraulic fluid flow into drain pan. Reinstall line when hydraulic fluid stops draining.

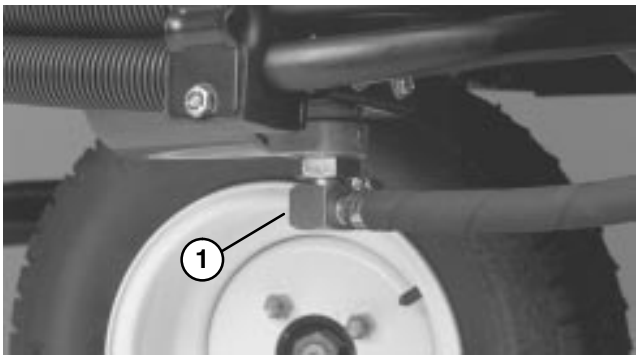

Figure 67
1. Hydraulic line

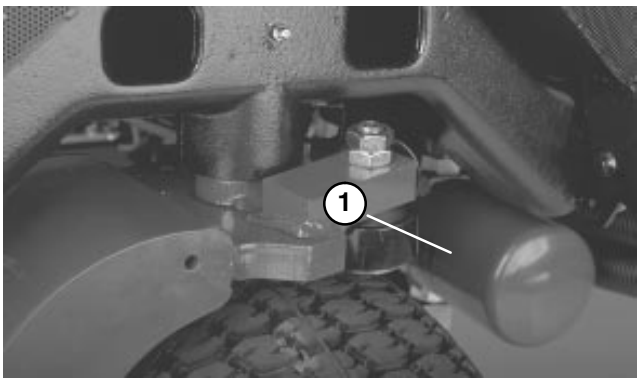

Figure 68
1. Hydraulic Filter

3. Fill reservoir with approximately 3.5 gallons of hydraulic fluid. Refer to Checking Hydraulic Fluid.

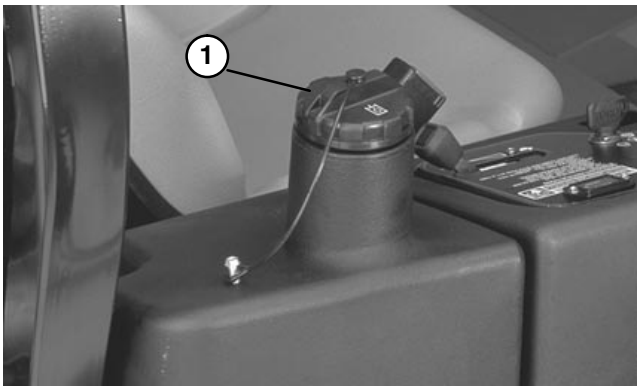

Figure 69
1. Hydraulic Reservoir

IMPORTANT: Use only hydraulic fluids specified. Other fluids could cause system damage.

4. Install reservoir cap. Start engine and use all hydraulic controls to distribute hydraulic fluid throughout the system. Also check for leaks. Then stop the engine.

5. Check level of fluid and add enough to raise level to FULL mark on dipstick. DO NOT OVER FILL.

REPLACING HYDRAULIC FILTER (Fig. 68)

The hydraulic system filter must be changed initially, after the first 10 hours of operation, and thereafter every 200 hours of operation or yearly, whichever comes first. Use a genuine Toro oil filter for replacement. The hydraulic oil must be changed every 400 hours of operation or yearly, whichever comes first.

Use the Toro replacement filter (Part No. 54–0110).

IMPORTANT: Use of any other filter may void the warranty on some components.

1. Position machine on a level surface, lower the cutting units, stop the engine, engage the parking brake and remove key from ignition switch.

2. Pinch off hose to filter mounting plate.

3. Clean area around filter mounting area. Place drain pan under filter and remove filter.

4. Lubricate new filter gasket and fill the filter with hydraulic fluid.

5. Assure filter mounting area is clean. Screw filter on until gasket contacts mounting plate. Then tighten filter one–half turn.

6. Start engine and let run for about two minutes to purge air from the system. Stop the engine and check for leaks.

CHECKING HYDRAULIC LINES AND HOSES

Daily, check hydraulic lines and hoses for leaks, kinked lines, loose mounting supports, wear, loose fittings, weather deterioration and chemical deterioration. Make all necessary repairs before operating.

HYDRAULIC MAINTENANCE

WARNING

Keep body and hands away from pin hole leaks or nozzles that eject high pressure hydraulic fluid. Use cardboard or paper to find hydraulic leaks. Hydraulic fluid escaping under pressure can penetrate skin and cause injury. Fluid accidentally injected into the skin must be surgically removed within a few hours by a doctor familiar with this form of injury or gangrene may result.

HYDRAULIC SYSTEM TEST PORTS (Fig. 70)

The test port is used to test pressure in the hydraulic circuit. Contact your local Toro distributor for assistance.

1. Test Port #1 is used to assist in trouble shooting the forward traction hydraulic circuit.

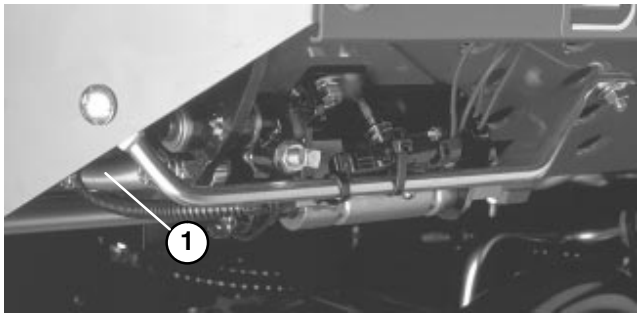

Figure 70

1. **Test Port**

ADJUSTING TRACTION DRIVE FOR NEUTRAL (Fig. 71)

If the machine “creeps” when the traction pedal is in the neutral position, the traction cam must be adjusted.

1. Park the machine on a level surface and turn the engine off.

2. Raise one front wheel and rear wheel off floor and place support blocks under frame.

WARNING

One front wheel and rear wheel must be raised off the ground or the machine will move during adjustment. Make sure machine is supported so it will not accidentally fall injuring anyone under machine.

3. Loosen locknut on traction adjustment cam.

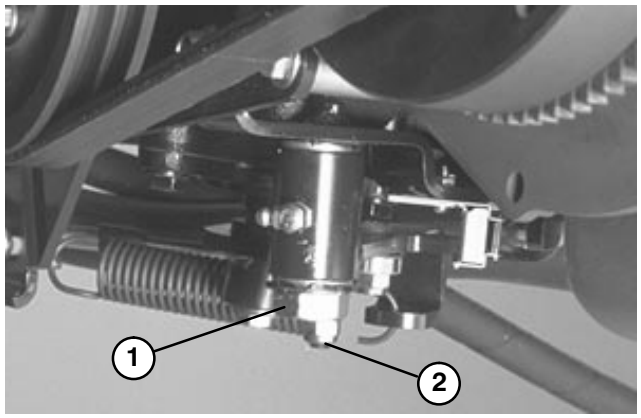

Figure 71

1. **Traction adjustment cam**
2. **Locknut**

WARNING

Engine must be running so final adjustment of the traction adjustment cam can be performed. To guard against possible personal injury, keep hands, feet, face and other parts of the body away from the muffler, other hot parts of the engine, and other rotating parts.

4. Start engine and rotate cam hex in both directions to determine mid position of neutral span.

5. Tighten locknut securing adjustment.

6. Stop the engine.

7. Remove support blocks and lower the machine to the shop floor. Test drive the machine to make sure it does not creep.

BRAKE MAINTENANCE

ADJUSTING PARKING BRAKE (Fig. 72)

Check adjustment every 200 hours.

1. Loosen set screw securing knob to parking brake lever.

2. Rotate knob until a force of 30−40 lbs. is required to actuate lever.

3. Tighten set screw after adjustment has been attained.

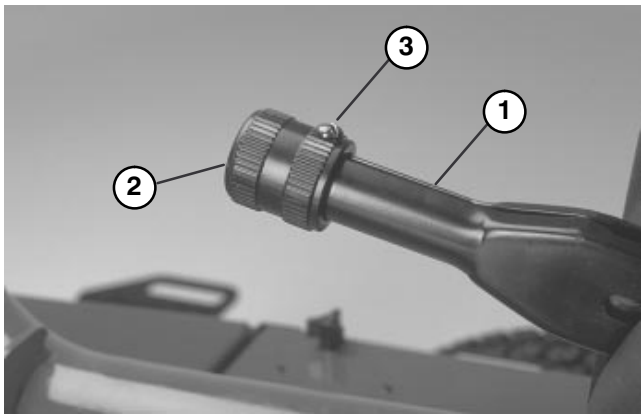

Figure 72

1. **Parking brake lever**
2. **Knob**
3. **Setscrew**

ELECTRICAL MAINTENANCE

BATTERY CARE

1. Battery electrolyte level must be properly maintained and the top of the battery kept clean. If the machine is stored in a location where temperatures are extremely high, the battery will run down more rapidly than if the machine is stored in a location where temperatures are cool.

2. Check the electrolyte level every 25 operating hours or, if machine is in storage, every 30 days.

3. Maintain cell level with distilled or demineralized water. Do not fill cells above the bottom of the split ring inside each cell. Install filler caps with vents pointing to the rear (toward fuel tank).

CAUTION

Wear safety goggles and rubber gloves when working with electrolyte. Charge the battery in a well ventilated place so gases produced while charging can dissipate. Since the gases are explosive, keep open flame and electrical spark away from the battery; do not smoke. Nausea may result if the gases are inhaled. Unplug charger from electrical outlet before connecting to, or disconnecting, charger leads from battery posts.

4. Keep top of battery clean by washing periodically with a brush dipped in ammonia or bicarbonate of soda solution. Flush the top surface with water after cleaning. Do not remove the fill caps while cleaning.

5. Battery cables must be tight on terminals to provide good electrical contact.

WARNING

Connecting cables to the wrong post could result in personal injury and/or damage to the electrical system.

6. If corrosion occurs at terminals, disconnect cables, negative (—) cable first and scrape clamps and terminals separately. Reconnect cables, positive (+) cable first and coat terminals with petroleum jelly.

7. Always disconnect battery cables, ground cable (—) first, to prevent possible wiring damage from short outs whenever working with the electrical system.

BATTERY STORAGE

If the machine will be stored more than 30 days, remove the battery and charge it fully. Either store it on the shelf on the machine. Leave the cables disconnected if stored on the machine. Store the battery in a cool atmosphere to avoid quick deterioration of the charge in the battery. To prevent battery from freezing, make sure it is fully charged. The specific gravity of a fully charged battery is 1.265 – 1.299.

FUSES

The fuses in machines electrical system are located under console cover.

BACKLAPPING

DANGER

TO AVOID PERSONAL INJURY OR DEATH:
- **Never place hands or feet in reel area while engine is running.**
- **While backlapping, reels may stall and then restart.**
- **Do not attempt to restart reels by hand or foot.**
- **Do not adjust reels while engine is running.**
- **If reel stalls, stop engine before attempting to clear reel.**

1. Position machine on a clean, level surface, lower the cutting units, stop the engine, engage parking brake and remove key from ignition switch.

2. Remove console cover to expose controls.

3. Rotate backlap knob to backlap position. Rotate reel speed knob to position 1.

Note: Seat switch is bypassed when backlap knob is in backlap position. Operator does not need to be in seat, but parking brake must be engaged or engine will not run.

CAUTION

Do not rotate backlap knob from mow to backlap position while engine is running as damage to reels may occur.

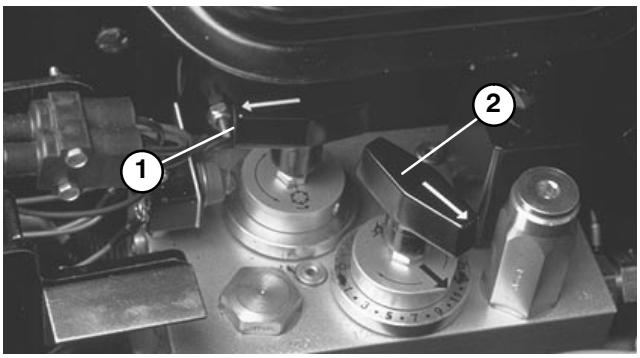

Figure 73
1. Backlap knob
2. Reel speed knob

4. Make initial reel to bedknife adjustments appropriate for backlapping on all cutting units. Start engine and set engine to low idle speed.

5. Engage reels by engaging PTO switch on control panel.

6. Apply lapping compound with long handled brush.

CAUTION

Be careful when lapping the reel because contact with the reel or other moving parts can result in personal injury.

7. To make an adjustment to the cutting units while backlapping, disengage reels and turn engine OFF. After adjustments have been completed, repeat steps 4−6.

8. When backlap operation is completed, stop the engine, rotate backlap knob to MOW position, set reel speed controls to desired mowing setting and wash all lapping compound off cutting units.

Note: Additional instructions and procedures on Backlapping are available in the TORO Sharpening Reel & Rotary Mowers Manual Form No. 80−300SL.

NOTE: For a better cutting edge, run a file across the front face of the bedknife when the lapping operation is completed. This will remove any burrs or rough edges that may have built up on the cutting edge.

ELECTRICAL SCHEMATIC

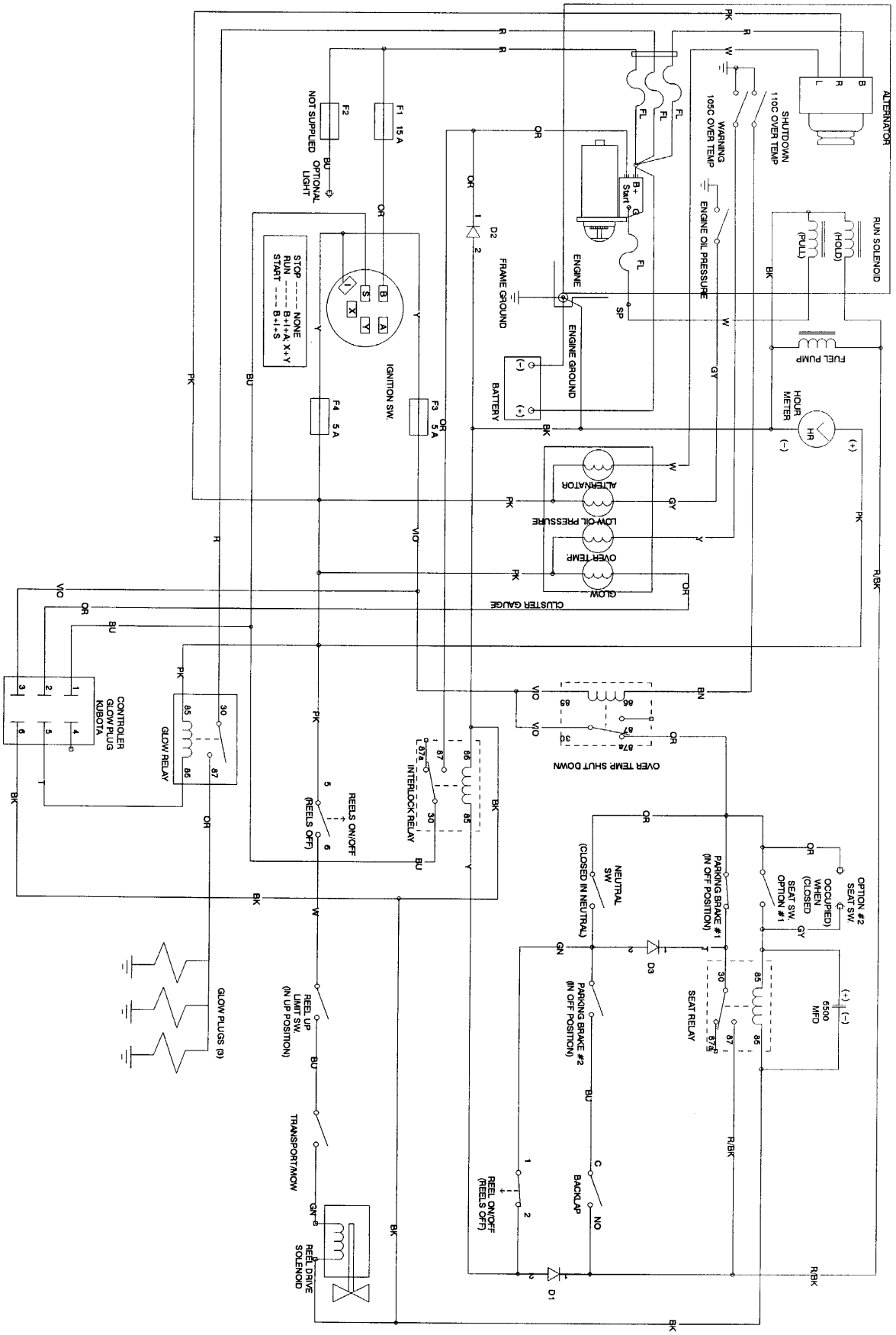

HYDRAULIC SCHEMATIC

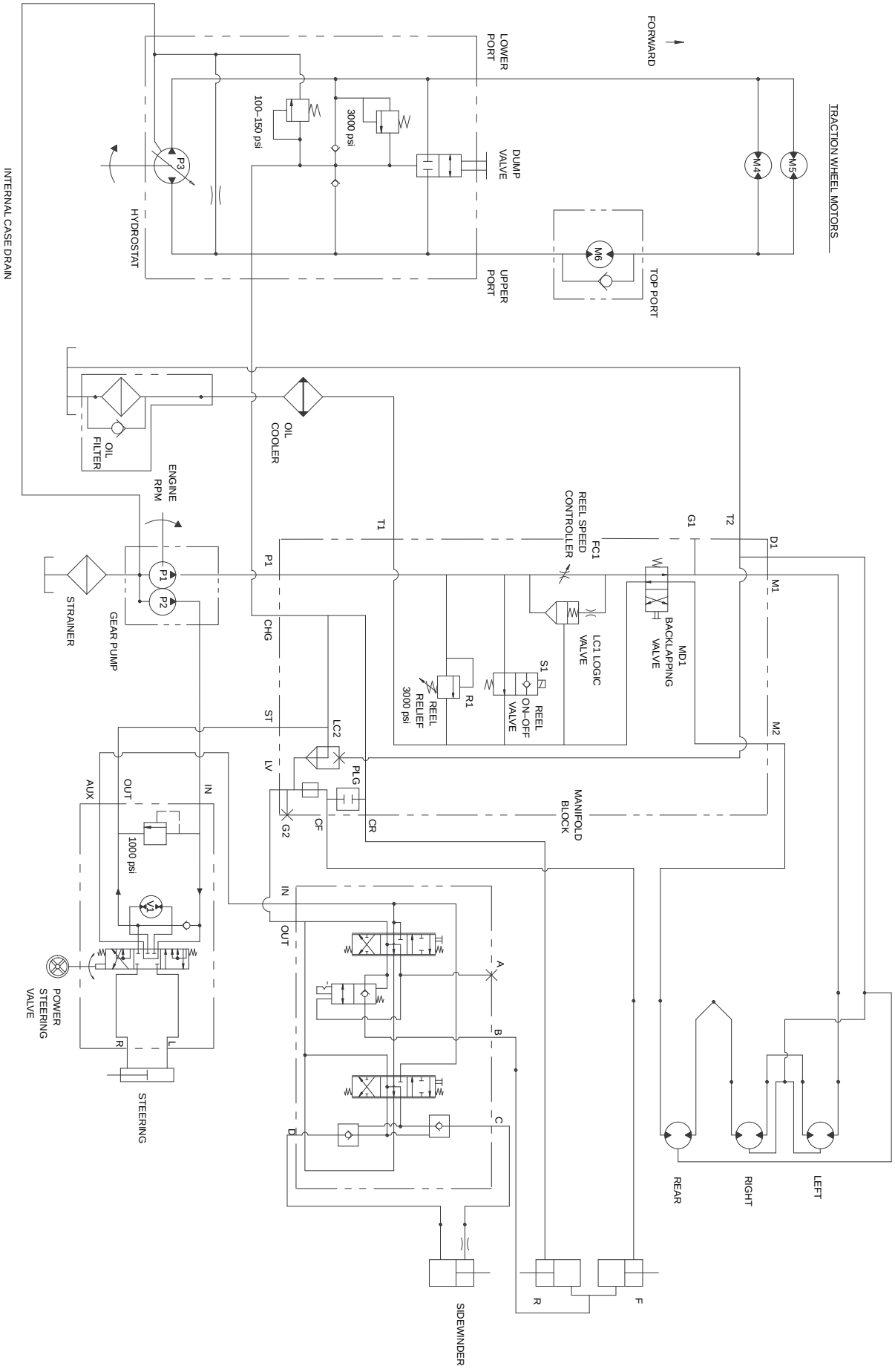

PREPARATION FOR SEASONAL STORAGE

Traction Unit

1. Thoroughly clean the traction unit, cutting units and the engine.

2. Check the tire pressure. Inflate all tires to 14−18 psi.

3. Check all fasteners for looseness; tighten as necessary.

4. Grease or oil all grease fittings and pivot points. Wipe up any excess lubricant.

5. Cover the entire length of the Sidewinder (Model 03201) cross tube with a light oil to prevent rust. After storage, wipe off all oil.

6. Lightly sand and use touch−up paint on painted areas that are scratched, chipped, or rusted. Repair any dents in the metal body.

7. Service the battery and cables as follows:

A. Remove the battery terminals from the battery posts.

B. Clean the battery, terminals, and posts with a wire brush and baking soda solution.

C. Coat the cable terminals and battery posts with Grafo 112X skin−over grease (Toro Part No. 505-47) or petroleum jelly to prevent corrosion.

D. Slowly recharge the battery every 60 days for 24 hours to prevent lead sulfation of the battery.

Engine

1. Drain the engine oil from the oil pan and replace the drain plug.

2. Remove and discard the oil filter. Install a new oil filter.

3. Refill oil pan with approximately 4.0 quarts of SAE10W-30 motor oil.

4. Start the engine and run at idle speed for approximately two minutes.

5. Stop the engine.

6. Thoroughly drain all fuel from the fuel tank, lines fuel filter and water separator assembly.

7. Flush the fuel tank with fresh, clean diesel fuel.

8. Re−secure all fuel system fittings.

9. Thoroughly clean and service the air cleaner assembly.

10. Seal the air cleaner inlet and the exhaust outlet with weatherproof tape.

11. Check anti−freeze protection and add as needed for expected minimum temperature in your area.

IDENTIFICATION AND ORDERING

MODEL AND SERIAL NUMBER

The mower has two identification numbers: a model number and a serial number. The two numbers are stamped into a plate that is riveted to the frame of mower. In any correspondence concerning the mower, supply the model and serial numbers to assure that correct information and replacement parts are obtained.

Note: Do not order by reference number if a parts catalog is being used; use the part number.

To order replacement parts from an Authorized TORO Service Dealer, supply the following information:

1. Model and serial numbers of the mower.

2. Part number, description and quantity of part(s) desired.

The Toro Commercial Products Two Year Limited Warranty

The Toro Company warrants your 1996 or newer Toro Commercial Product ("Product") purchased after January 1, 1997, to be free from defects in materials or workmanship for the period of time listed below. Where a warrantable condition exists, Toro will repair the Product at no cost to you including diagnosis, labor, parts, and transportation. This warranty begins on the date the Product is delivered to the original retail purchaser.

Warranty Duration: Two years or 1500 operational hours*, whichever occurs first.
***Product equipped with hour meter**

Owner Responsibilities:

As the Product owner, you are responsible for required maintenance and adjustments stated in your Owner's Manual. Failure to perform required maintenance and adjustments can be grounds for disallowing a warranty claim.

Instructions for Obtaining Warranty Service:

You are responsible for notifying the Commercial Products Distributor or Authorized Commercial Products Dealer from whom you purchased the Product as soon as you believe a warrantable condition exists.

If you need help locating a Commercial Products Distributor or Authorized Dealer, or if you have questions regarding your warranty rights or responsibilities, you may contact us at:

Toro Commercial Products Service Department
8111 Lyndale Avenue South
Minneapolis, MN, 55420–1196
Telephone: (612) 888–8801
Facsimile: (612) 887–8258
E–Mail: Commercial.Service@Toro.Com

Maintenance Parts:

Parts scheduled for replacement as required maintenance ("Maintenance Parts"), are warranted for the period of time up to the scheduled replacement time for that part.

Items/Conditions Not Covered:

Not all product failures or malfunctions that occur during the warranty period are defects in materials or workmanship. The items / conditions listed below are not covered by this warranty:

- Product failures which result from the use of non–Toro replacement parts, or from installation and use of add–on, modified, or unapproved accessories are not covered.
- Product failures which result from failure to perform required maintenance and/or adjustments are not covered.
- Product failures which result from operating the Product in an abusive, negligent or reckless manner are not covered.
- This warranty does not apply to parts subject to consumption through use unless found to be defective. Examples of parts which are consumed, or used up, during normal Product operation include, but are not limited to, blades, reels, bedknives, tines, spark plugs, castor wheels, tires, filters, belts, etc.
- This warranty does not apply to failures caused by outside influence. Items considered to be outside influence include, but are not limited to, weather, storage practices, contamination, use of unapproved coolants, lubricants, additives, or chemicals, etc.
- This warranty does not apply to normal "wear and tear" items. Normal "Wear and Tear" includes, but is not limited to, damage to seats due to wear or abrasion, worn painted surfaces, scratched decals or windows, etc.

Other Legal Disclaimers:

The above remedy of product defects through repair by an authorized distributor or dealer is the purchaser's sole remedy for any defect. This warranty gives you specific legal rights, and you may also have other rights which vary from state to state.

Except for the Emissions warranty referenced below, if applicable, there is no other express warranty. All implied warranties of merchantability and fitness for use are limited to the duration of the express warranty.

Some states do not allow limitations on how long an implied warranty lasts, so the above limitation may not apply to you.

The Toro Company is not liable for indirect, incidental or consequential damages in connection with the use of the Product, including any cost or expense of providing substitute Product or service during periods of malfunction or non–use.

Some states do not allow the exclusion of incidental or consequential damages, so the above exclusion may not apply to you.

Note to California residents: The Emissions Control System on your Product may be covered by a separate warranty meeting requirements established by the U.S. Environmental Protection Agency (EPA), or the California Air Resources Board (CARB). The hour limitations set forth above do not apply to the Emissions Control System Warranty. Refer to the California Emission Control Warranty Statement printed in your Owner's Manual or contained in the engine manufacturer's documentation for details.