FORM NO. 3321–803

TORO®

MODEL NO. 30506

INSTALLATION INSTRUCTIONS

62” BLOWER KIT
GROUNDSMASTER 200 X 62” SERIES

SAFETY INSTRUCTIONS

BEFORE OPERATING

1. Read and understand the contents of this manual before starting and operating the machine. Become familiar with all controls and know how to stop quickly. A free replacement manual is available by sending complete Model and Serial Numbers to:

The Toro Company

8111 Lyndale Avenue South

Minneapolis, Minnesota 55420

2. Never allow children to operate the machine. Do not allow adults to operate the machine without proper instruction. Only trained operators, skilled in slope operation and who have read this manual should operate this machine.

3. Never operate machine when under the influence of drugs or alcohol.

4. Remove all debris or other objects that might be picked up and thrown by cutter blades. Keep all bystanders away from the operating area.

5. Keep all shields and safety devices in place. If a shield, safety device, or decal is defective or damaged, repair or replace it before operating machine. Also, tighten any loose nuts, bolts, and screws to insure machine is in safe operating condition.

6. Do not wear loose fitting clothing because it could get caught in moving parts. Always wear long pants and substantial shoes. Wearing safety glasses, safety shoes, and a helmet is advisable and required by some local ordinances and insurance regulations.

7. Be sure interlock switches are adjusted correctly so engine cannot be started unless traction pedal is released–neutral position–and PTO switch is in DISENGAGED position.

8. Fill fuel tank before starting the engine. Avoid spilling any fuel. Since fuel is flammable, handle it carefully.

A. Use an approved fuel container.

B. Do not fill fuel tank when engine is hot or running.

C. Do not smoke while handling fuel.

D. Fill fuel tank outdoors and up to about one inch (25 mm) from the top of the tank, not the filler neck.

E. Wipe up any spilled fuel.

WHILE OPERATING

9. Sit on the seat when starting the engine and operating the machine.

10. Always make sure seat pivot retaining pin is installed.

11. Before starting the engine:

A. Engage parking brake.

B. Make sure traction pedal is in neutral and PTO is in DISENGAGE position.

C. After engine is started, release parking brake and keep foot off traction pedal. Machine must not move. If movement is evident, the neutral return mechanism is adjusted incorrectly. Shut engine off and adjust until machine does not move when traction pedal is released.

12. Do not run the engine in a confined area without adequate ventilation. Exhaust fumes are hazardous and could possibly be deadly.

13. Maximum seating capacity is one person. Therefore, never carry passengers.

14. Check carefully for overhead clearances before driving under any objects.

15. The grass deflector or complete blower assembly must always be installed on cutting unit.

16. Operator must be skilled and trained in how to drive on hillsides. Failure to use caution on slopes or hills may cause loss of control and vehicle to tip or roll, possibly resulting in personal injury or death.

17. Traverse slopes carefully. Do not start or stop suddenly when traversing slopes or when traveling uphill or downhill.

18. If engine stalls or machine loses headway and cannot make it to the top of a slope, do not turn machine around. Always back slowly straight down the slope.

© The TORO Company – 1998

SAFETY INSTRUCTIONS

19. Using the machine demands the operator's complete attention. To prevent loss of control:

A. Operate only in daylight or when there is good artificial light.

B. Drive slowly.

C. Avoid sudden starts and stops.

D. Look behind machine before backing up.

E. Watch for holes or other hidden hazards.

F. Do not drive close to a sand trap, ditch, creek, or hazard.

G. Reduce speed when making sharp turns and when turning on a hillside.

H. The cutting deck must be lowered when going down slopes for steering control.

20. The grass deflector must always be installed and in lowest position on the cutting unit when blower assembly is removed. This product is designed to drive objects into the ground where they lose energy quickly in grassy areas. However, don't take an injury risk! When person or pet appears unexpectedly in or near the mowing area, STOP MOWING. Careless operation, combined with terrain angles, ricochets, or improperly positioned guards, can lead to thrown object injuries. Do not resume mowing until area is cleared.

21. Never raise the cutting unit while the blades or other parts are rotating.

22. If cutting blades strike a solid object or the machine vibrates abnormally, disengage PTO, move throttle to SLOW, set parking brake, and shut engine off. Remove key from switch to prevent possibility of accidental starting. Check cutting unit, blower assembly and traction unit for damage and defective parts. Repair any damage before restarting the engine and operating the cutting unit. Assure cutting unit blades are in good condition and blade bolts are tightened to proper torque specifications (See Cutting Deck Operator's Manual).

23. If the cutting unit discharge area or blower assembly ever plugs, disengage PTO and shut engine off before removing the obstruction.

24. To stop machine, remove foot from traction pedal and use brakes. Gradually reversing the traction pedal can provide additional braking.

25. Do not touch engine, muffler, or it adjacent shroud while engine is running or soon after it has stopped. These areas could be hot enough to cause a burn.

26. Lower the cutting unit to the ground and remove key from switch whenever machine is left unattended.

27. Before getting of the seat:

A. Move traction pedal to neutral position and remove foot from pedal.

B. Set the parking brake and disengage the PTO.

C. Shut the engine off and remove key from ignition switch. Wait for all movement to stop before getting off the seat.

MAINTENANCE

28. Remove key from ignition switch to prevent accidental starting of the engine when servicing, adjusting, or storing the machine.

29. If major repairs are ever needed or assistance is desired, contact an Authorized TORO Distributor.

30. To reduce potential fire hazard, keep the engine free of excessive grease, grass, leaves, and accumulations of dirt.

31. Make sure machine is in safe operating condition by keeping nuts, bolts, and screws tight. Check all cutting unit blade mounting bolts frequently to assure they are tightened to proper torque specifications (See Cutting Deck Operator's Manual).

32. Make sure all hydraulic line connectors are tight, and all hydraulic hoses and lines are in good condition before applying pressure to the system.

33. Keep body and hands away from pin hole leaks or nozzles that eject hydraulic fluid under high pressure. Use paper or cardboard, not hands, to search for leaks. Hydraulic fluid escaping under pressure can have sufficient force to penetrate skin and cause serious injury. If fluid is ejected into the skin, it must be surgically removed within a few hours by a doctor familiar with this form of injury or gangrene may result.

34. Before disconnecting or performing any work on the hydraulic system, all pressure in system must be relieved by stopping engine and lowering implement to the ground.

35. If the engine must be running to perform maintenance or an adjustment, keep clear of PTO shaft, cutting unit blades, and other moving parts.

36. At the time of manufacture, the machine conformed to safety standards in effect for riding mowers. To ensure optimum performance and continued safety certification of the machine, use genuine TORO replacement parts and accessories. Replacement parts and accessories made by other manufacturers may result in non–conformance with the safety standards, and the warranty may be voided.

SAFETY INSTRUCTIONS

The following safety and instruction decals are mounted on the machine. If any decal becomes damaged or illegible, install a new decal. Part numbers are listed below or in your parts catalog.

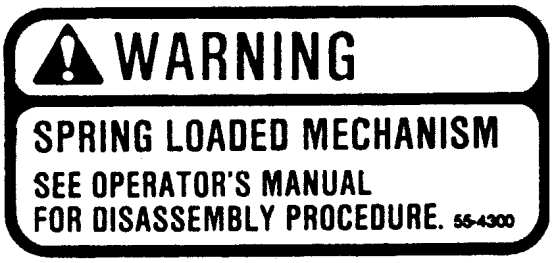

ON IDLER PULLEY ARM
(Part No. 55−4300)
(Part No. 93−6696 for CE)



ON BLOWER HOUSING
(Part No. 54−9220)
(Part No. 93−7316 for CE)



ON FRONT OF BLOWER HOUSING
(Part No. 82−5510)
(Part No. 93−7301 for CE)



ON DECK
(Part No. 66−1340)
(Part No. 93−7824 for CE)



ON SIDES OF CHUTE
(Part No. 80−4670)
(Part No. 94−2556 for CE)

LOOSE PARTS

Note: Use this chart as a checklist to assure all parts necessary for assembly have been received. Without these parts, total set-up cannot be completed. Some parts may have already been assembled at factory.

DESCRIPTION	QTY	USE
Double Pulley Pulley Nut Nut Cover	1 1 1	Install new pulley
Blade	3	Mount to spindle shafts
Front Deflector Capscrew 5/16−18 x 5/8" lg. Locknut 5/16−18	1 3 3	Mount front deflector to deck
Rear Deflector Capscrew 5/16−18 x 5/8" lg. Locknut 5/16−18	1 3 3	Mount rear deflector to deck
Rear Shelf Capscrew 3/8−16 x 1" lg. Lockwasher 3/8	1 4 4	Mount rear shelf to deck
Left shelf Capscrew 1/4−20 x 1" lg. Capscrew 1/4−20 x 3/4" lg. Locknut 1/4−20	1 2 1 3	Mount left shelf to deck
Right shelf Capscrew 1/4−20 x 1" lg. Capscrew 1/4−20 x 3/4" lg. Locknut 1/4−20	1 1 2 3	Mount Right shelf to deck
Deflector stop Capscrew 1/4−20 x 3/4" lg. Locknut 1/4−20	1 2 2	Mount to side of deck
Blower Assembly w/ Mounting Brackets	1	Mount to top of deck
Capscrew 5/16−18 x 1" lg. Locknut 5/16−18 Carriage Bolt 3/8−16 x 7/8" lg. Flange Nut 3/8−16	1 2 2 1	Secure front blower mounting bracket to deck
Capscrew 5/16−18 x 1" lg. Locknut 5/16−18 Carriage Bolt 3/8−16 x 7/8" lg. Flange Nut 3/8−16	2 2 2 2	Secure rear blower mounting bracket to deck
Idler Arm Assembly Pivot Screw 3/8−16 Bushing Washer Locknut 3/8−16 Spring Threaded Rod Flange Nut 5/16−18 Spring Bracket Capscrew 1/4−20 x 1" lg. Locknut 1/4−20	1 1 1 2 1 1 1 2 1 2 2	Mount to top of deck
Belt	1	Mount on blower and deck spindle pulley
Trim Molding Deck Cover Knob	 1 1	Mount new deck cover
Bumper Capscrew 5/16−18 x 3" lg. Locknut 5/16−18	1 4 4	
Chute Assembly	1	Mount to blower
Counterbalance Spring	1	Replace R.H. Counterbalance spring
Decal−Danger	1	Mount on deck
Installation Instructions	1	
Parts Catalog	1	
Registration Card	1	

Specifications and design subject to change without notice.

SET-UP INSTRUCTIONS

REMOVE CUTTING UNIT FROM TRACTION UNIT

1. Position machine on a level surface, raise cutting unit, engage parking brake, be sure traction pedal is in neutral position, PTO lever in OFF position, shut engine OFF and remove key from switch.

CAUTION

Counterbalance spring is in tension when deck is in lowered position. Always raise deck before adjusting or removing spring.

2. Disconnect counterbalance from traction unit, remove lock pins from brackets, separate spring tension assemblies from brackets and lay them down on the deck. Loosely secure lock pins to brackets to prevent losing them (Fig. 1).

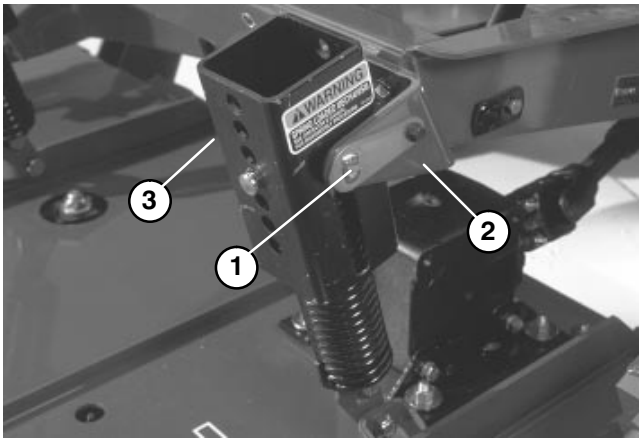

Figure 1

1. Lockpin
2. Bracket
3. Spring tension assembly
4. Height−of0cut clevis pin

3. Lower cutting unit, remove (4) capscrews and nuts securing lift arm brackets to castor arms (Fig. 2).

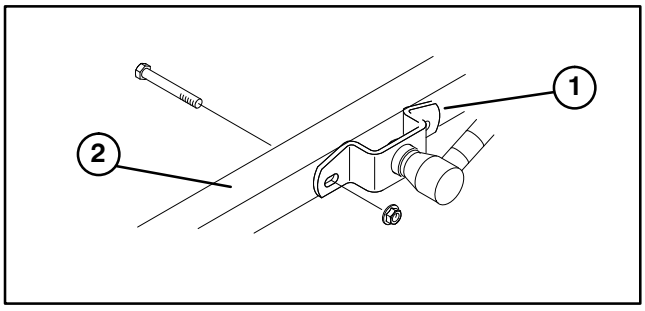

Figure 2

1. Lift arm bracket
2. Right castor arm

4. Start engine, raise traction unit lift arms.

5. Stop engine and slide cutting unit away from traction unit, separating male and female sections of PTO shaft (Fig. 3).



Figure 3

1. Male PTO shaft
2. Female PTO shaft

CAUTION

Do not start engine and engage the PTO lever when PTO shaft is not connected to gear box on cutting unit. If engine is started and PTO shaft is allowed to rotate, serious injury could result.

INSTALL NEW SPINDLE PULLEY

1. Unhook latches securing right cover to top of cutting unit. Remove cover from cutting unit.

2. Loosen (2) nuts securing idler plate so tension of the idler pulley against the belt is released (Fig. 4).

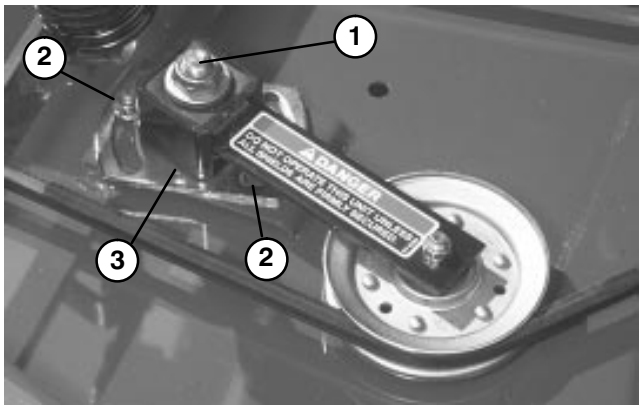

Figure 4

1. Idler adjusting nut
2. Nuts (2)
3. Idler plate

3. Remove belt from right spindle pulley (Fig. 3).

4. Remove six carriage bolts and flange nuts securing spindle housing assembly to cutting unit (Fig. 5). Slide spindle housing assembly out bottom of cutting unit.

5. Remove nut and washer retaining pulley on spindle shaft. Remove pulley from shaft.

6. Slide new double spindle pulley onto spindle shaft. Do not install pulley nut at this time.

SET-UP INSTRUCTIONS

7. Slide pulley end of spindle housing assembly through hole in cutting unit, and loop belt around pulley and idler. Mount spindle assembly in place with six carriage bolts and flange nuts.

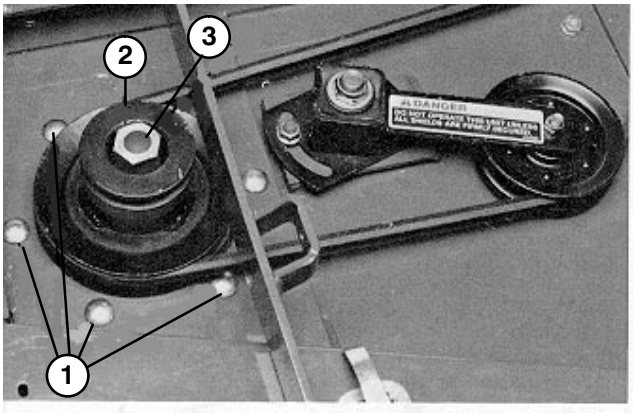

Figure 5
1. Carriage bolts
2. Double spindle pulley
3. Pulley nut

8. Install original washer and new pulley nut onto spindle shaft and tighten to 100 ft−lb. Install nut cover.

9. Adjust (tighten) idler adjusting nut to 35−40 ft−lb to achieve proper belt tension. Tighten idler plate nuts.

INSTALL NEW BLADES

1. Grasp end of blade using a glove or thickly padded glove. Remove blade bolt, anti−scalp cup and blade from spindle shaft (Fig. 6).

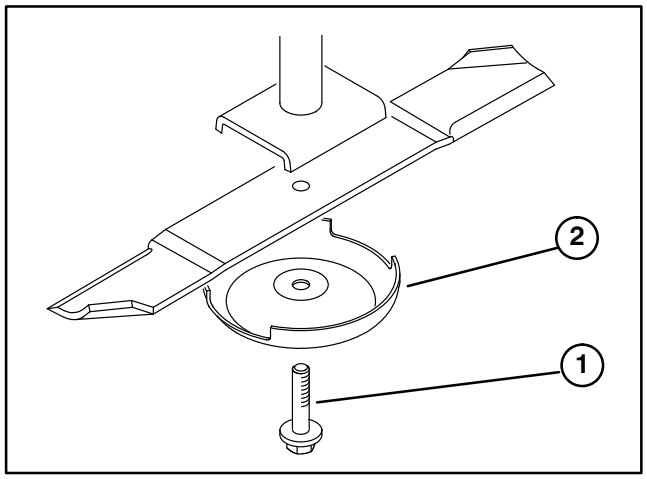

Figure 6
1. Blade bolt
2. Anti−Scalp Cup

2. In sequence, install new blade (sail facing toward cutting unit) and anti−scalp cup. Secure parts in place with blade bolt. Tighten blade bolt to 85−110 ft−lb.

3. Repeat procedure on all blades.

REMOVE/MODIFY GRASS DEFLECTOR

1. Remove capscrews, locknuts and springs securing deflector mounts to pivot brackets (Fig. 7). Remove deflector.

2. Remove carriage bolts and flange nuts securing pivot brackets to housing (Fig. 7). Remove pivot brackets. Retain fasteners for future use.

3. Remove (2) carriage bolts, flat washers and locknuts securing reinforcement plate to under side of housing and stiffener plate to top of housing (Fig. 7).

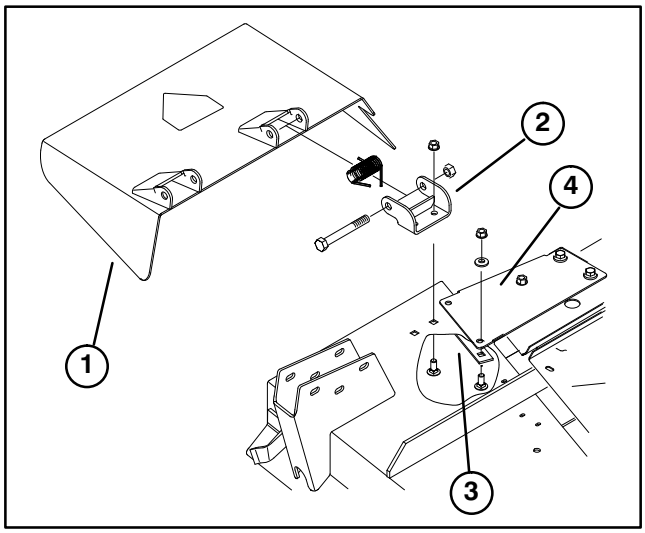

Figure 7
1. Grass deflector
2. Pivot brackets
3. Reinforcement plate
4. Stiffener plate

4. Using capscrews, locknuts and springs previously removed, install new pivot brackets to deflector mounts (Fig. 8). Do not over tighten nuts because brackets must be allowed to pivot. Save this assembly for side discharge operation.

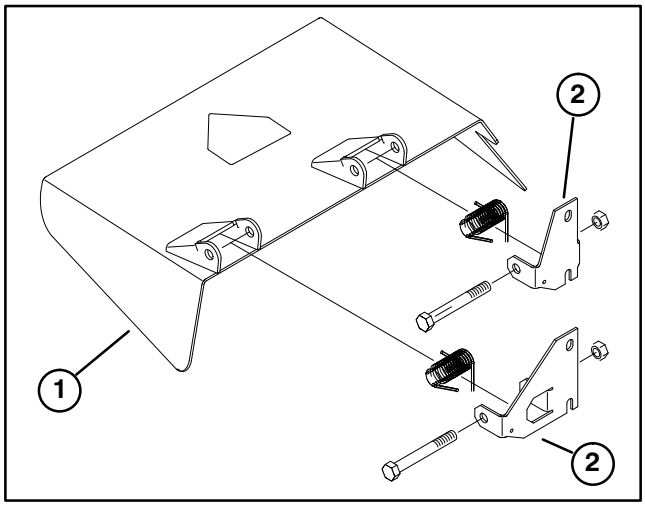

Figure 8
1. Grass deflector
2. Pivot brackets

SET-UP INSTRUCTIONS

INSTALL BLOWER MOUNTING BRACKETS

1. Remove fasteners securing right hand deck cover spring latch to right side of cutting deck (Fig. 9). Remove and retain latch for future use with right hand cover.

2. Position blower and mounting brackets on deck, aligning mounting holes with holes previously used for mounting grass deflector. Figure 9 is shown with blower removed from brackets. Make sure there is no gap between blower and cutting deck.

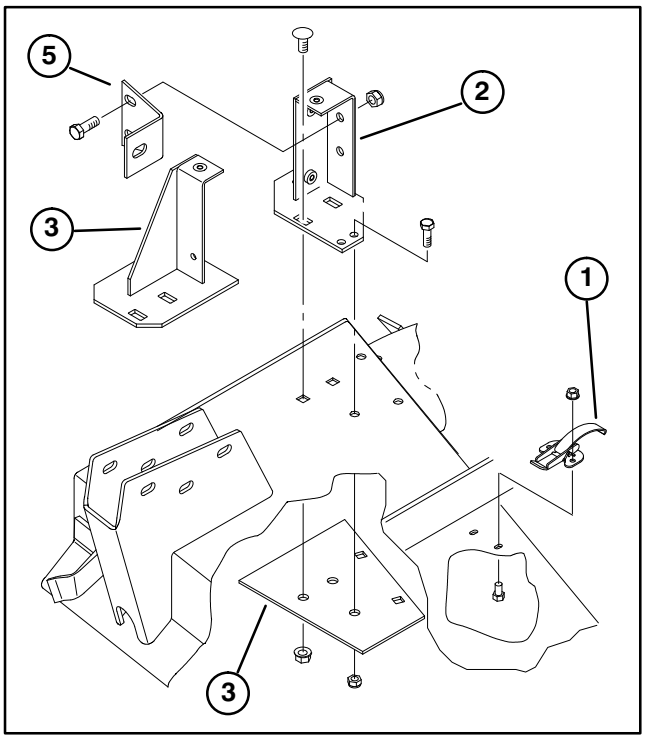

Figure 9

1. **Spring latch**
2. **Rear mounting bracket**
3. **Front mounting bracket**
4. **Reinforcement plate**
5. **Blower brace**

3. Position new reinforcement plate under deck aligning mounting holes with holes previously used for mounting grass deflector (Fig. 9).

4. Mount front and rear brackets and reinforcement plate to deck with (2) previously removed 3/8 −16 x 7/8" lg. carriage bolts and flange nuts each (Fig. 9). Bolt heads must be on top of deck.

5. Remove (2) knobs securing blower to mounting brackets. Remove blower.

6. Using each bracket as a template, mark location and drill (2) additional 11/32" dia. holes. (2 holes for rear bracket and 1 for front bracket. Use reinforcement plate for a template to drill (1) 11/32" dia. hole for rear bracket.

Note: Use caution when drilling holes so castor arm is not damaged.

7. Secure brackets and reinforcement plate to deck with 5/16 −18 x 3/4" lg. capscrews and locknuts (Fig. 9). Capscrew heads must be on top of deck.

8. Mount blower brace to rear mounting bracket with (2) 3/8 −16 x 1" lg. capscrews and locknuts (Fig. 9). and to castor arm with a 3/8 −16 x 1" lg. capscrew.

9. When re−mounting lift arm brackets to castor arms, mount other side of blower brace to lift arm bracket and right castor arm with capscrew and nut previously removed.

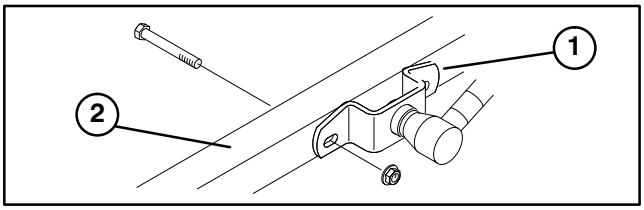

Figure 10

1. **Lift arm bracket**
2. **Right castor arm**

INSTALL DECK DEFLECTORS

1. Insert front deflector into deck, aligning end of deflector with edge of discharge opening (Fig. 11 & 12).

2. Using deflector as a template, mark and drill (3) 11/32" dia. holes thru front and top of deck.

3. Secure (2) front mounting tabs of deflector to deck with 5/16−18 x 5/8" lg. capscrews and 5/16−18 locknuts.

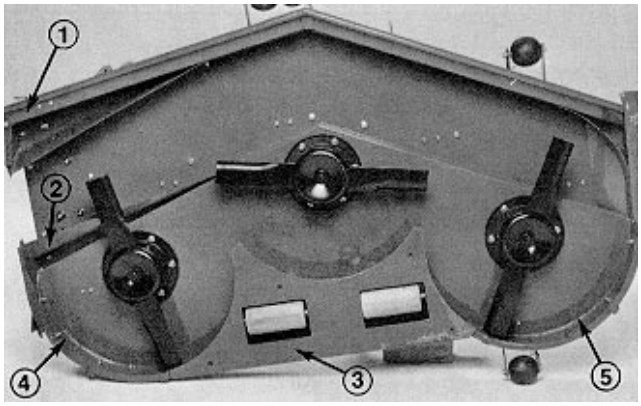

Figure 11

1. **Front deflector**
2. **Rear deflector**
3. **Rear shelf**
4. **Left shelf**
5. **Right shelf**

4. Secure front right corner of front mounting bracket and top tab of deflector to deck with a 5/16−18 x 1" lg. capscrew and locknut.

SET-UP INSTRUCTIONS

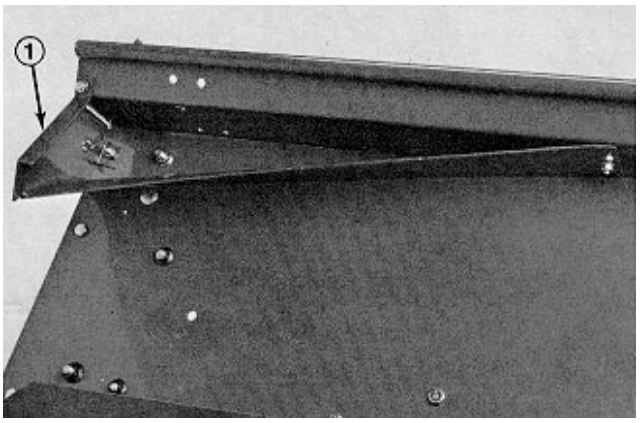

Figure 12
1. Front deflector

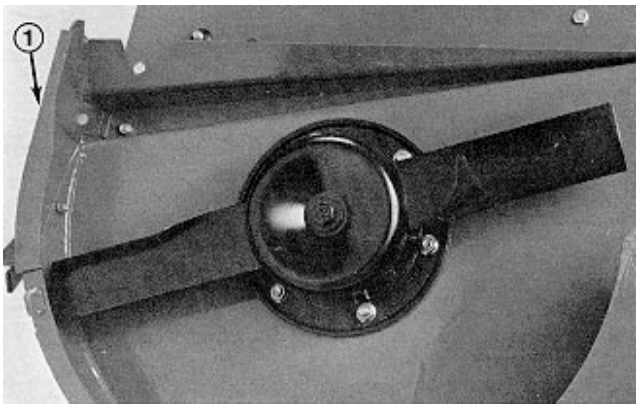

Figure 13
1. Rear deflector

5. Using deflector as a template, mark and drill (3) 11/32" dia. holes thru deck.

6. Secure deflector to deck with (3) 5/16−18 x 5/8" lg. capscrews and 5/16−18 locknuts.

7. Before mounting left and right shelves to deck, you must grind welds off bottom edge of deck. Paint deck after grinding.

8. Using existing holes, mount rear shelf to deck with (4) 3/8−16 x 1" lg. capscrews and 3/8 lockwashers (Fig. 14).

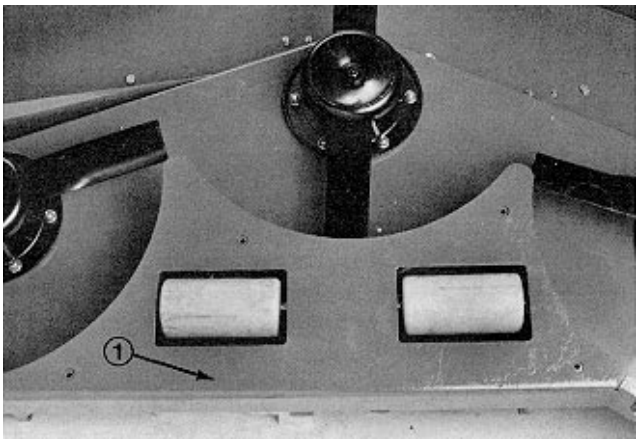

Figure 14
1. Rear shelf

9. Align left shelf with left end of rear shelf and edge of deck (Fig. 11 & 14).

10. Secure left shelf to deck with (2) 1/4−20 x 1" lg. capscrews, (1) 1/4−20 x 3/4" lg. capscrews and (3) locknuts (Fig 15). Capscrew heads to be positioned on the inside of deck.

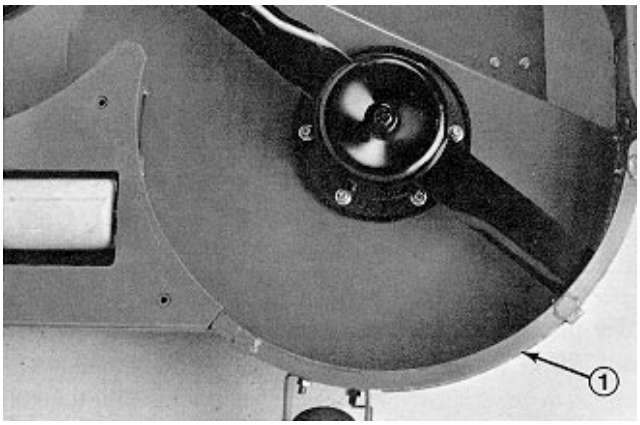

Figure 15
1. Left shelf

11. Align right shelf with right end of rear shelf and edge of deck (Fig. 11 & 16). Using left shelf as a template, locate, mark and drill (3) 9/32" dia. holes in deck.

12. Secure right shelf to deck with (1) 1/4−20 x 1" lg. capscrew, (2) 1/4−20 x 3/4" lg. capscrews and (3) locknuts. Capscrew heads to be positioned on the inside of deck.

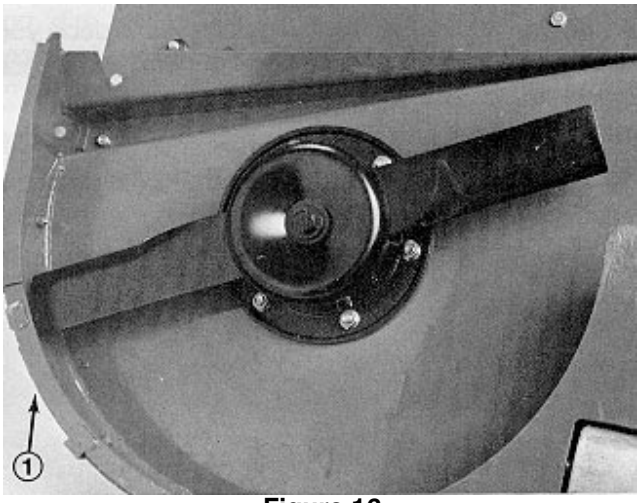

Figure 16
1. Right shelf

MOUNT NEW DEFLECTOR STOP

1. Using new deflector stop as a template, set it on the original flat deflector stop (Fig. 17). Assure new deflector stop is flush at the bottom, contacting side of deck, and parallel with outside edge of deflector support.

SET-UP INSTRUCTIONS

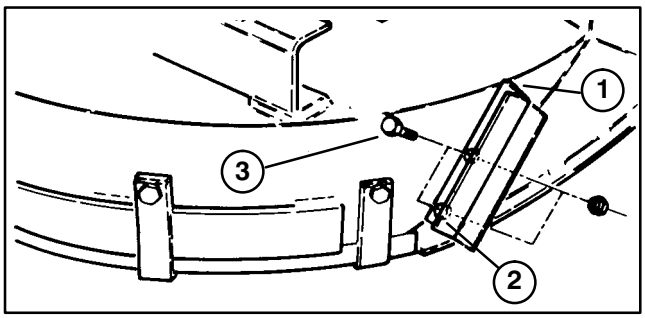

Figure 17

1. **New deflector stop**
2. **Mark and drill holes**
3. **Capscrews and locknuts**

2. Locate, mark and drill (2) 9/32" dia. holes through old deflector support.

3. Mount new deflector support to old deflector stop with (2) 1/4−20 x 3/4" lg. capscrews and 1/4−20 locknuts, as shown in figure 17.

MOUNT IDLER ASSEMBLY

1. Using dimensions shown in figure 18, locate, mark and drill a 13/32" dia. hole in deck. Dimensions shown are from right front corner of deck and from edge of discharge opening. Blower brackets are removed for clarity.

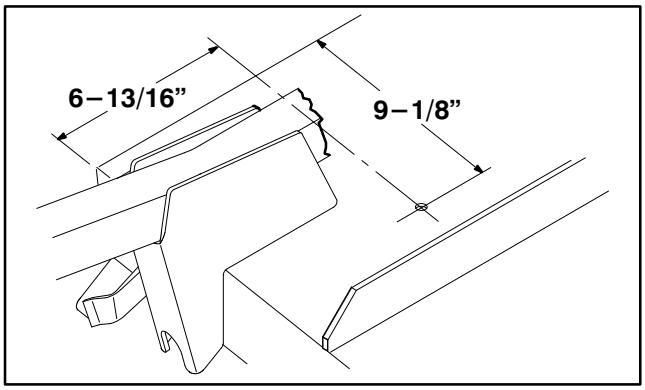

Figure 18

2. Using dimensions shown in figure 19, locate, mark and drill a 13/16" dia. hole and (2) 13/32" in right bridge bar.

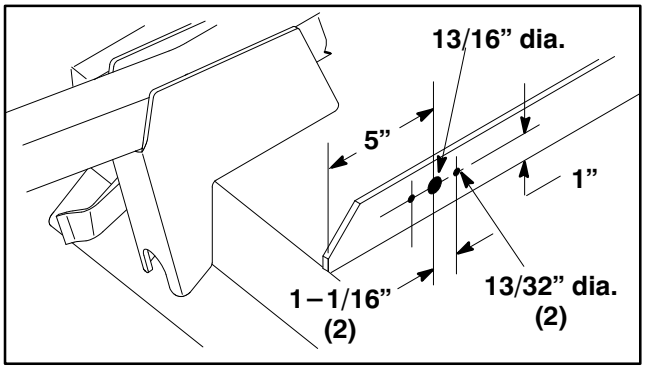

Figure 19

3. Thread a 5/16−18 flange nut onto threaded rod approximately 2" (Fig.20).

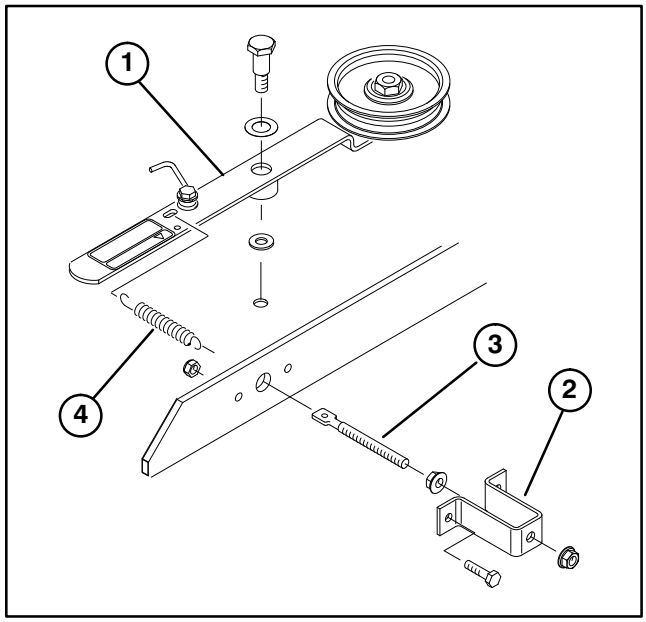

Figure 20

1. **Idler pulley arm**
2. **Spring bracket**
3. **Threaded rod**
4. **Spring**

4. Insert end of threaded rod through large hole in spring bracket and loosely secure with another 5/16−18 flange nut (Fig.20). Do not tighten flange nuts

5. Insert other end of threaded rod through hole in bridge bar and secure spring bracket to bridge with (2) capscrews and locknuts (Fig.20).

6. Hook short loop of spring into hole in threaded rod and long loop in hole in idler arm (Fig.20).

7. Mount idler pulley arm to deck with the following parts, in this order: 3/8−16 pivot screw, 1/2" thrust washer, idler arm, 3/8" thrust washer, deck and 3/8−16 locknut (Fig. 20). (Do not tighten flange nuts, on threaded rod, at this time. Adjust spring tension after blower assembly and belt have been installed.)

MOUNT BLOWER

1. Route belt around small deck spindle pulley .

2. Slide blower onto mounting bracket alignment studs (Fig. 21) while routing belt around blower pulley.

Note: If blower does not easily slide onto mounting brackets, loosen alignment bolts slightly.

3. Secure blower to brackets with (2) knobs.

4. Adjust spring length to 4−7/8" for proper belt tension by adjusting flange nuts on threaded rod.

SET-UP INSTRUCTIONS

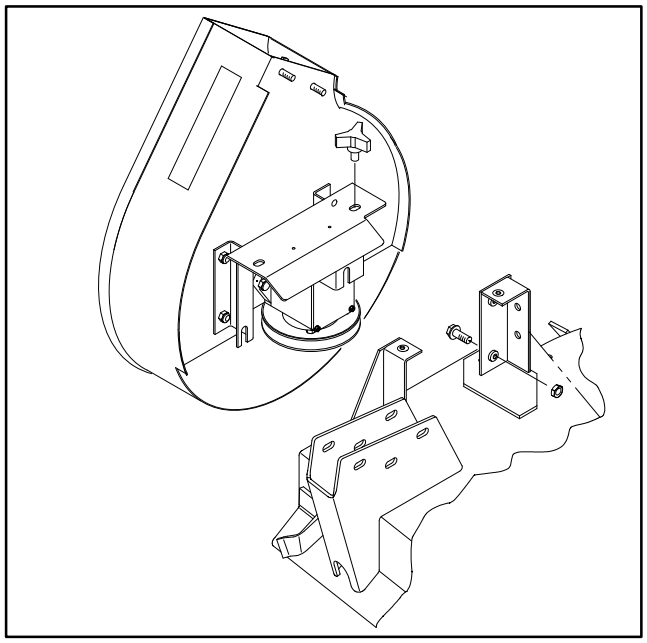

Figure 21

INSTALL BUMPER

1. Using dimensions shown in figure 22, locate, mark and drill a 11/32" dia. hole thru both walls of right front castor arm bracket.

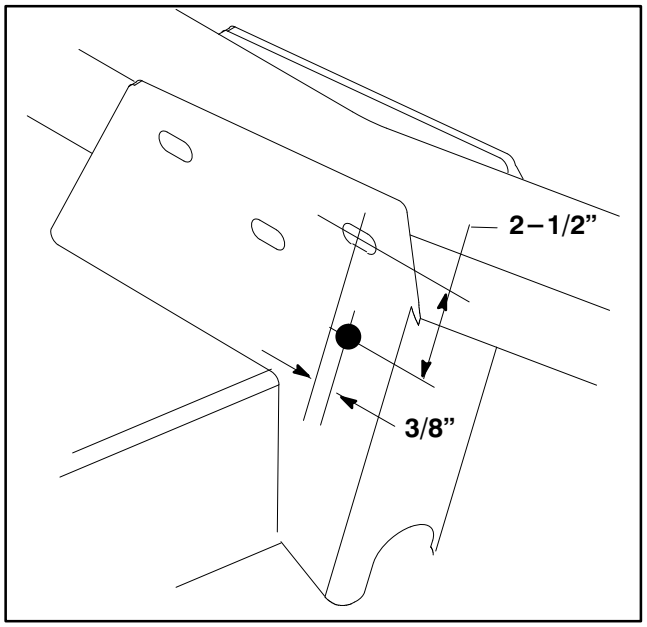

Figure 22

2. Secure top mounting hole of front mounting plate of bumper to castor arm bracket with a 5/16 −18 x 3" lg. capscrew and locknut (Fig. 23).

3. Using both mounting plates of bumper as templates, locate, mark and drill (3) additional11/32" dia. holes thru both walls of front and rear castor arm brackets.

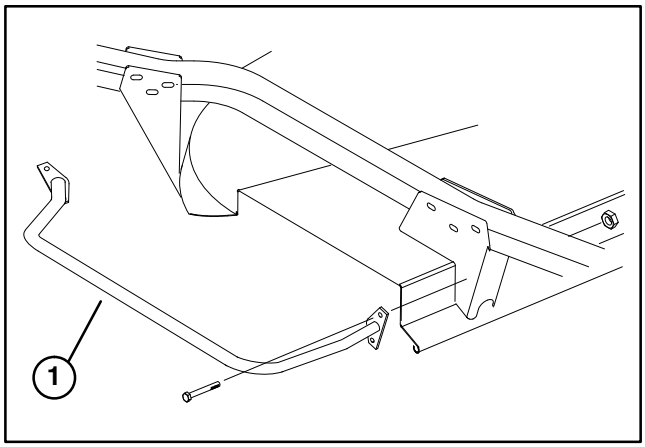

Figure 23
1. **Bumper**

4. Secure bumper mounting plates to castor arm brackets with (3) 5/16 −18 x 3" lg. capscrews and locknuts.

INSTALL NEW DECK COVER

1. Insert a trim molding onto right bridge bar, so side of spring bracket is 4" to far edge of trim molding (Fig. 24).

2. Hook rear of deck cover (Fig. 24) onto rear channel pin while aligning cover mounting tab with hole in right castor arm. Cover to rest on trim molding. Adjust molding as required.

3. Secure cover to right castor arm with knob.

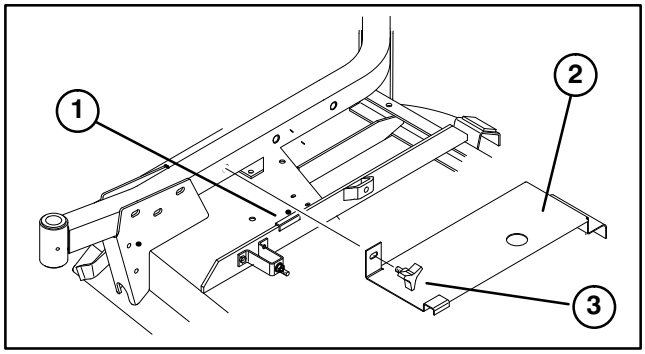

Figure 24
1. **Trim molding**
2. **Cover**
3. **Knob**

INSTALL NEW COUNTERBALANCE SPRING

To compensate for the additional weight of the blower assembly, the original light counterbalance spring at the right side of the machine, must be replaced with the heavier spring included (Fig. 25).

1. Remove hair pin cotter and clevis pin and slide spring assembly out of retaining bracket.

SET-UP INSTRUCTIONS

2. Screw spring off top and bottom mounting brackets.

3. Screw new heavy spring onto both mounting brackets. Assure spring is completely threaded through all holes and it contacts flat side of bracket.

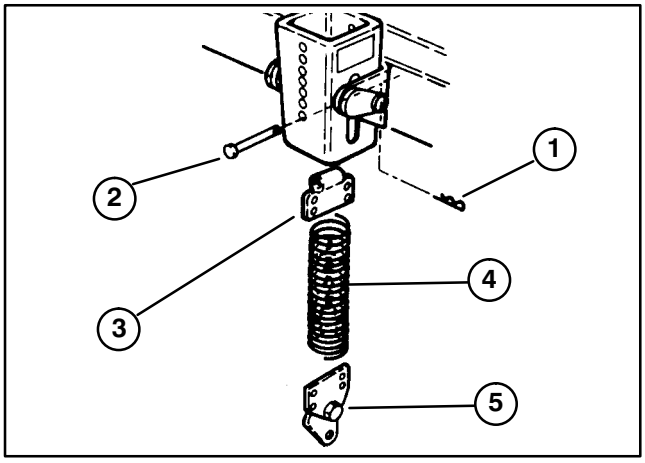

Figure 25

1. **Hair pin cotter**
2. **Clevis pin**
3. **Top bracket**
4. **Spring**
5. **Bottom bracket**

4. Install spring assembly into retaining bracket with clevis pin and hair pin cotter.

INSTALL CUTTING UNIT TO TRACTION UNIT

1. Engage parking brake, assure traction pedal is in neutral and PTO lever is in OFF position. Start engine and raise lift arms. Stop engine.

2. Position cutting unit in front of traction unit aligning gear case input shaft with PTO shaft and install the shaft.

3. Carefully lower lift arms while aligning lift arm brackets with castor arms. Align PTO shaft hole with gear case input shaft hole and install roll pin.

4. Secure lift arm brackets and side of blower brace to castor arms with (4) capscrews and nuts securing.

5. Start engine and raise cutting unit. Secure counterbalance springs to cutting unit with shoulder bolts and locknuts.

INSTALL NEW DECAL

Install Danger Decal (Part No. 66−1340 or 93−7824 for CE) on front edge of deck, inside right castor arm.

MOUNT BLOWER HOUSING CHUTE

IMPORTANT: When the chute in the Blower Kit is used with a 15 cubic foot Hopper Kit, you must cut off a section of the chute to assure proper fit between the blower and the hopper. If used with another kit, proceed to step 3.

1. Using dimensions shown in figure 26, use a tape measure and mark the chute.

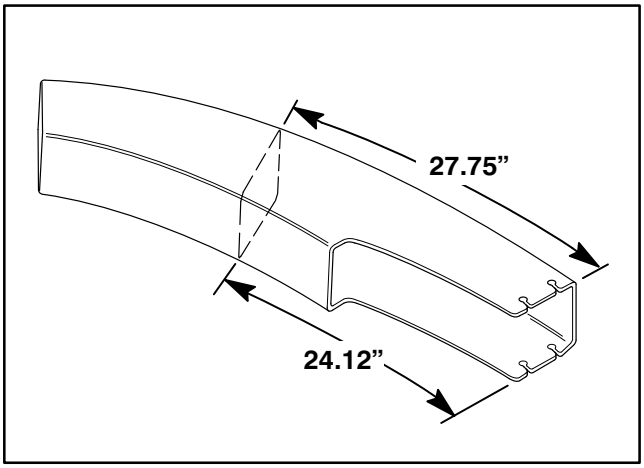

Figure 26

2. Draw lines around all sides of the chute and cut off with a saw.

3. Set deck into desired height−of−cut setting.

4. Slide chute over blower opening and onto mounting studs (Fig. 27).

5. Lower hopper hood and align chute with hood snout. Secure chute in position with (4) 5/16 locknuts and chute brackets. Wide end of brackets to be positioned to rear.

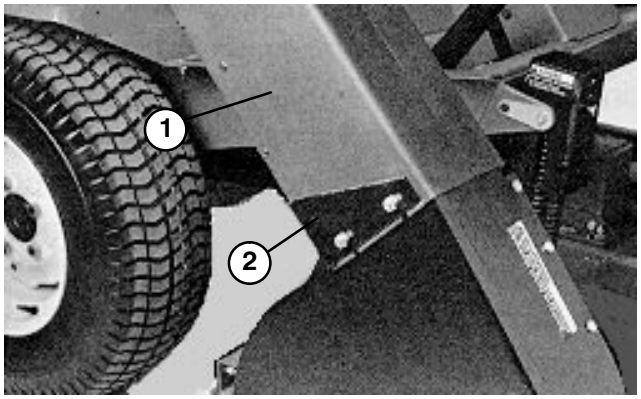

Figure 27

1. **Chute**
2. **Chute brackets**

OPERATING INSTRUCTIONS

OPERATING CHARACTERISTICS (When used with a 9 cu. ft. or 15 cu. ft. Hopper kit)

CAUTION

When grass collector is removed, NEVER operate without deflector in place.

For best performance, regulate traction pedal to keep engine rpm high and somewhat constant. A good rule to follow is: decrease ground speed as the load on the cutting blade increases; and increase ground speed as the load on the blade decreases. This allows the engine, working with the transmission, to sense the proper ground speed while maintaining high blade tip speed necessary for good quality–of–cut, vacuuming action, and to throw grass into hopper. If blower speed drops too low, plugging may result. Refer to Cutting Unit and Traction Unit Operator's Manual for operation of each.

DANGER

Never place hands or feet in chute, blower, or cutting unit.

1. This grass collector is designed for use in wet or dry conditions. Do not collect extremely long grass as the hopper will fill too quickly.

2. When bagging wet, heavy grass, some clippings may not be thrown completely through the chute. The hole in the bottom of the chute allows these clippings to drop out without plugging the chute. When this happens, reduce ground speed.

3. The bumper which protects the blower housing doesn't extend far enough to eliminate the chance of the bagger striking a stationary object. Stay far enough away from obstructions to avoid collisions. Trim with left side of cutting unit only.

CAUTION

Use care to avoid collision between hopper and any stationary objects. Always trim with left side of cutting unit.

4. While operating, check frequently for excessive clippings left on turf or uncut grass. If those conditions occur, the blower or cutting unit may be plugged. Stop unit, disengage PTO, set brake and shut off ignition. Check for obstructions in the chute, blower or cutting unit. Clear any obstruction using a stick or similar tool. Check blower belt tension. If slipping, readjust.

5. Cut grass often, especially when it grows rapidly. If shorter turf is desired, cut the grass again. Overlap the swaths to produce an even cutting pattern.

IMPORTANT: When transporting unit, tie down grass collector hood or back it onto truck or trailer to avoid wind throwing hood open and damaging it.

BLOWER REMOVAL

1. Shut engine off and disengage idler. Secure idler to front castor arm bracket with retaining hook.

2. Remove belt cover and lift belt off spindle pulley. Re–install cover.

3. Remove (2) knobs securing blower to mounting brackets and remove blower, belt and chute.

4. Reverse procedure to reinstall blower assembly.

USING GRASS DEFLECTOR

At some time you may wish to operate cutting deck without the blower. Since a new pivot should have already been installed on the grass deflector, you can quickly mount the deflector to the blower mounting brackets.

1. Remove bumper from deck.

2. Slide slots at bottom of deflector pivot bracket onto capscrews at side of deck brackets (Fig. 28).

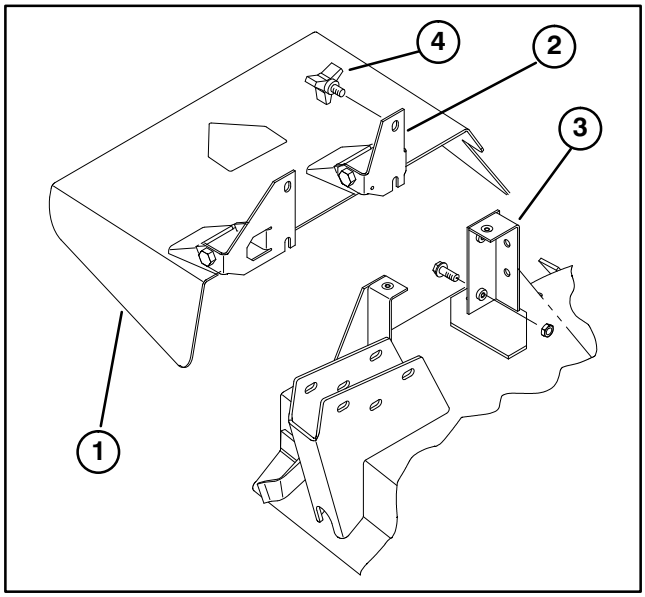

Figure 28

1. **Grass deflector**
2. **Pivot bracket**
3. **Deck bracket**
4. **Knob**

3. Secure deflector in place with (2) knobs.

MAINTENANCE

1. Keep unit clean. Assure engine is free of dirt and chaff. Make sure all fasteners are tight. Check deflectors, baffles and shields for wear and replace as needed.

2. Check blower gearbox impeller for tightness every 50 hours. Torque impeller shaft bolt to 220−230 in.−lbs.

3. Clean grass clippings from hood, chute, blower and cutting unit after each use. Wash underside of cutting unit daily with hose. An excessive buildup of clippings will impair collection system performance.

4. Check belt tension and wear every 50 hours. To adjust belt tension, loosen idler mounting screws, engage idler lever and push idler pulley firmly into blower belt. Tighten mounting screws.

5. The blower gear box should need little maintenance. Check for leakage every 50 hours. If leakage should occur, replace seals and refill with 2 oz. of high quality moly di−sulfide grease. Repack bearings with this grease before assembling.

6. Refer to Cutting Unit and Traction Unit Operator's Manuals for service requirements of each.

NOTES

NOTES

The Toro Commercial Products Two Year Limited Warranty

The Toro Company warrants your 1996 or newer Toro Commercial Product ("Product") purchased after January 1, 1997, to be free from defects in materials or workmanship for the period of time listed below. Where a warrantable condition exists, Toro will repair the Product at no cost to you including diagnosis, labor, parts, and transportation. This warranty begins on the date the Product is delivered to the original retail purchaser.

Warranty Duration: Two years or 1500 operational hours*, whichever occurs first.
***Product equipped with hour meter**

Owner Responsibilities:

As the Product owner, you are responsible for required maintenance and adjustments stated in your Owner's Manual. Failure to perform required maintenance and adjustments can be grounds for disallowing a warranty claim.

Instructions for Obtaining Warranty Service:

You are responsible for notifying the Commercial Products Distributor or Authorized Commercial Products Dealer from whom you purchased the Product as soon as you believe a warrantable condition exists.

If you need help locating a Commercial Products Distributor or Authorized Dealer, or if you have questions regarding your warranty rights or responsibilities, you may contact us at:

Toro Commercial Products Service Department
8111 Lyndale Avenue South
Minneapolis, MN, 55420–1196
Telephone: (612) 888–8801
Facsimile: (612) 887–8258
E–Mail: Commercial.Service@Toro.Com

Maintenance Parts:

Parts scheduled for replacement as required maintenance ("Maintenance Parts"), are warranted for the period of time up to the scheduled replacement time for that part.

Items/Conditions Not Covered:

Not all product failures or malfunctions that occur during the warranty period are defects in materials or workmanship. The items / conditions listed below are not covered by this warranty:

- Product failures which result from the use of non–Toro replacement parts, or from installation and use of add–on, modified, or unapproved accessories are not covered.
- Product failures which result from failure to perform required maintenance and/or adjustments are not covered.
- Product failures which result from operating the Product in an abusive, negligent or reckless manner are not covered.
- This warranty does not apply to parts subject to consumption through use unless found to be defective. Examples of parts which are consumed, or used up, during normal Product operation include, but are not limited to, blades, reels, bedknives, tines, spark plugs, castor wheels, tires, filters, belts, etc.
- This warranty does not apply to failures caused by outside influence. Items considered to be outside influence include, but are not limited to, weather, storage practices, contamination, use of unapproved coolants, lubricants, additives, or chemicals, etc.
- This warranty does not apply to normal "wear and tear" items. Normal "Wear and Tear" includes, but is not limited to, damage to seats due to wear or abrasion, worn painted surfaces, scratched decals or windows, etc.

Other Legal Disclaimers:

The above remedy of product defects through repair by an authorized distributor or dealer is the purchaser's sole remedy for any defect. This warranty gives you specific legal rights, and you may also have other rights which vary from state to state.

Except for the Emissions warranty referenced below, if applicable, there is no other express warranty. All implied warranties of merchantability and fitness for use are limited to the duration of the express warranty.

Some states do not allow limitations on how long an implied warranty lasts, so the above limitation may not apply to you.

The Toro Company is not liable for indirect, incidental or consequential damages in connection with the use of the Product, including any cost or expense of providing substitute Product or service during periods of malfunction or non–use.

Some states do not allow the exclusion of incidental or consequential damages, so the above exclusion may not apply to you.

Note to California residents: The Emissions Control System on your Product may be covered by a separate warranty meeting requirements established by the U.S. Environmental Protection Agency (EPA), or the California Air Resources Board (CARB). The hour limitations set forth above do not apply to the Emissions Control System Warranty. Refer to the California Emission Control Warranty Statement printed in your Owner's Manual or contained in the engine manufacturer's documentation for details.