Form No. 3400-741 Rev B

TORO®

Count on it.

Parts Catalog

TimeCutter® ZS 5000

Riding Mower

Model No. 74661—Serial No. 316000001 and Up

Register at www.Toro.com.
Original Instructions (EN)

CE

3400-741 B

Ordering Replacement Parts

To order replacement parts, please supply the part number, the quantity, and the description of each part desired.

Understanding Reference Numbers

Each identified part in an illustration has a reference number. The reference number for a part also appears in the parts list, along with other information about the part.

This catalog uses two special reference number formats, one to indicate parts in a service assembly and another to indicate the quantity of a given part in an illustration.

Service Assembly Reference Numbers

Parts in service assemblies have reference numbers in the form a:b. The a represents the reference number of the entire service assembly and the b represents a sequential number unique to each part within the service assembly.

For example, a wheel assembly might be identified by reference number 6, the tire by 6:1, the valve by 6:2, and the wheel by 6:3. When you order the assembly identified by reference number 6, you receive all parts identified by reference numbers 6:1,6:2, and 6:3. However, you may also order any part individually. Reference numbers of this type appear in illustration and in parts lists.

Reference Numbers Indicating Quantity

In an illustration, if a reference number indicates more than one part, the reference number has the form nX y. The n represents the quantity of the part, the X is the multiplication symbol, and the y represents the reference number.

For example, in an illustration, the reference number 2X 37 means that two of the parts identified by reference number 37 are indicated.

Contents

Frame, Front Axle and Caster Wheel Assembly 4
13 Inch Wheel and Tire Assembly No. 119-3473 6
Deck Lift Assembly 8
Motion Control Assembly 10
Brake Assembly 12
Seat Assembly 14
Belt and Idler Assembly 16
Hydro Transaxle Drive and Rear Wheel Assembly 18
2 Ply Wheel and Tire Assembly No. 131-3672 20
Left Hand Hydro Transaxle Assembly No. 119-3350 22
Right Hand Hydro Transaxle Assembly No. 119-3351 24
Clutch Assembly 26
Engine and Muffler Assembly 28
Fuel System Assembly with Non-Canister Style Air Filter 30
Carburetor Assembly with Non-Canister Style Air Filter 32
Air Intake and Filtration Assembly with Non-Canister Style Air Filter 34
Ignition and Electrical Assembly 36
Crankcase and Crankshaft Assembly 38
Governor Control Assembly 40
Piston and Cylinder Head Assembly 42
Blower Housing Assembly 44
Gasket and Seal Kit Assembly 46
Body Styling and Fuel Pod Assembly 48
Fuel Delivery Assembly 50
Battery and Electrical Assembly 52
Fuse and Wire Harness Assembly 54
50 Inch Deck Assembly 56
50 Inch Deck Decal Assembly No. 131-3606 58
50 Inch Deck and Baffle Assembly 60
50 Inch Deck Belt, Spindle and Blade Assembly 62
Attachments and Accessories 64

© 2018—The Toro® Company
8111 Lyndale Avenue South
Bloomington, MN 55420

Contact us at www.Toro.com.
Printed in the USA.
All Rights Reserved

Frame, Front Axle and Caster Wheel Assembly

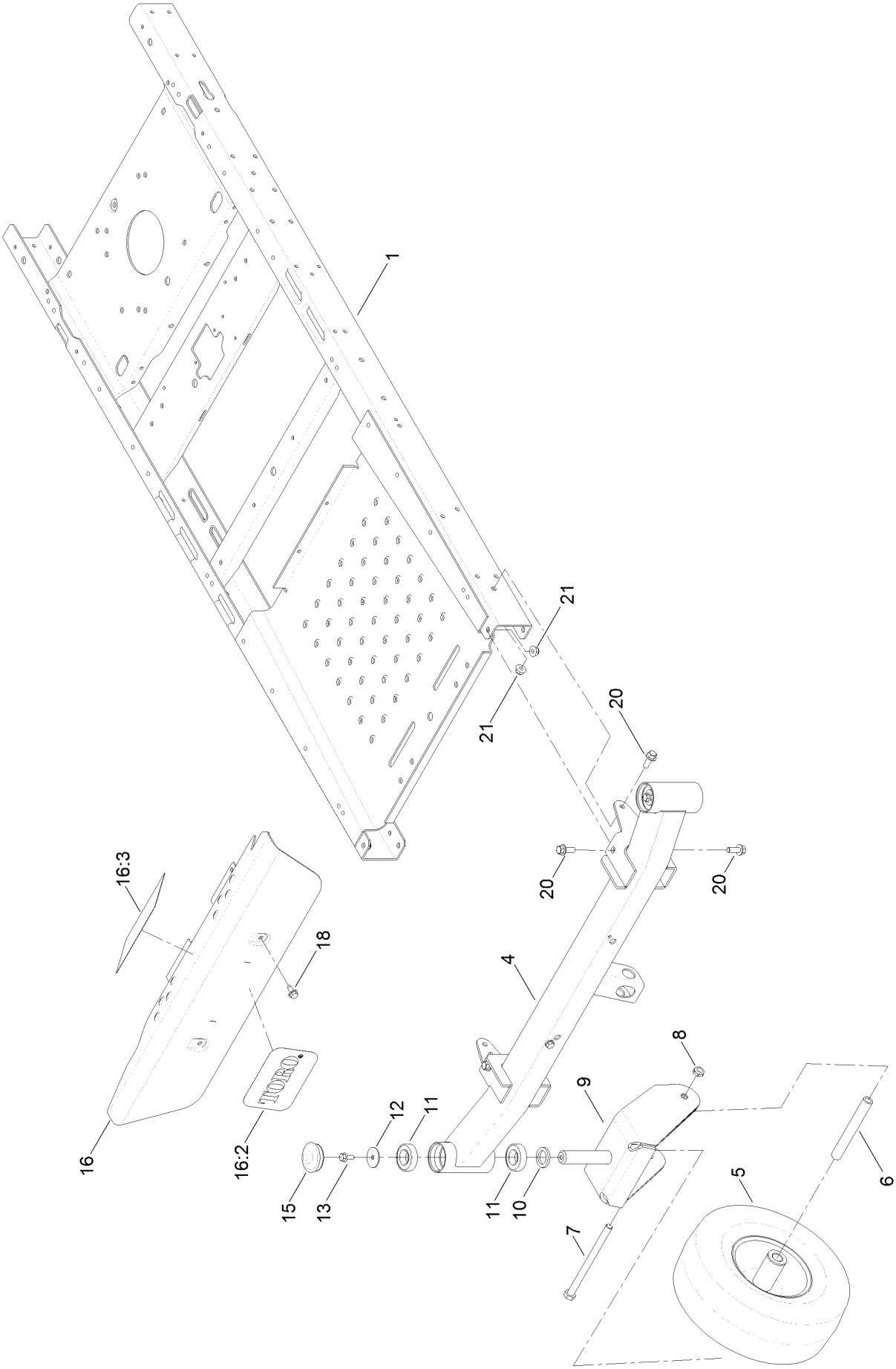

Frame, Front Axle and Caster Wheel Assembly (continued)

Ref.	Part Number	Qty.	Description
1	130-0699-01	1	Frame ASM
4	125-1726-01	1	Axle ASM
5	119-3473	2	13 Inch Wheel And Tire ASM
6	119-3475	2	Spanner
7	325-37	2	Screw-HH
8	3296-45	2	Nut-Lock, NI
9	119-3349-01	2	Fork-Caster
10	117-7394	2	Washer-Thrust
11	109-3678	4	Bearing-Ball
12	3256-68	2	Washer-Flat
13	3234-47	2	Screw-HHF
15	116-4348	2	Cap-Grease
16	132-0892	1	Footrest ASM
16:2	99-4693	1	Decal
16:3	132-0869	1	Decal-Danger
18	32144-70	2	Screw-HWHTF
20	3234-42	6	Screw-HHF
21	104-8301	6	Nut-HF, NI

13 Inch Wheel and Tire Assembly No. 119-3473

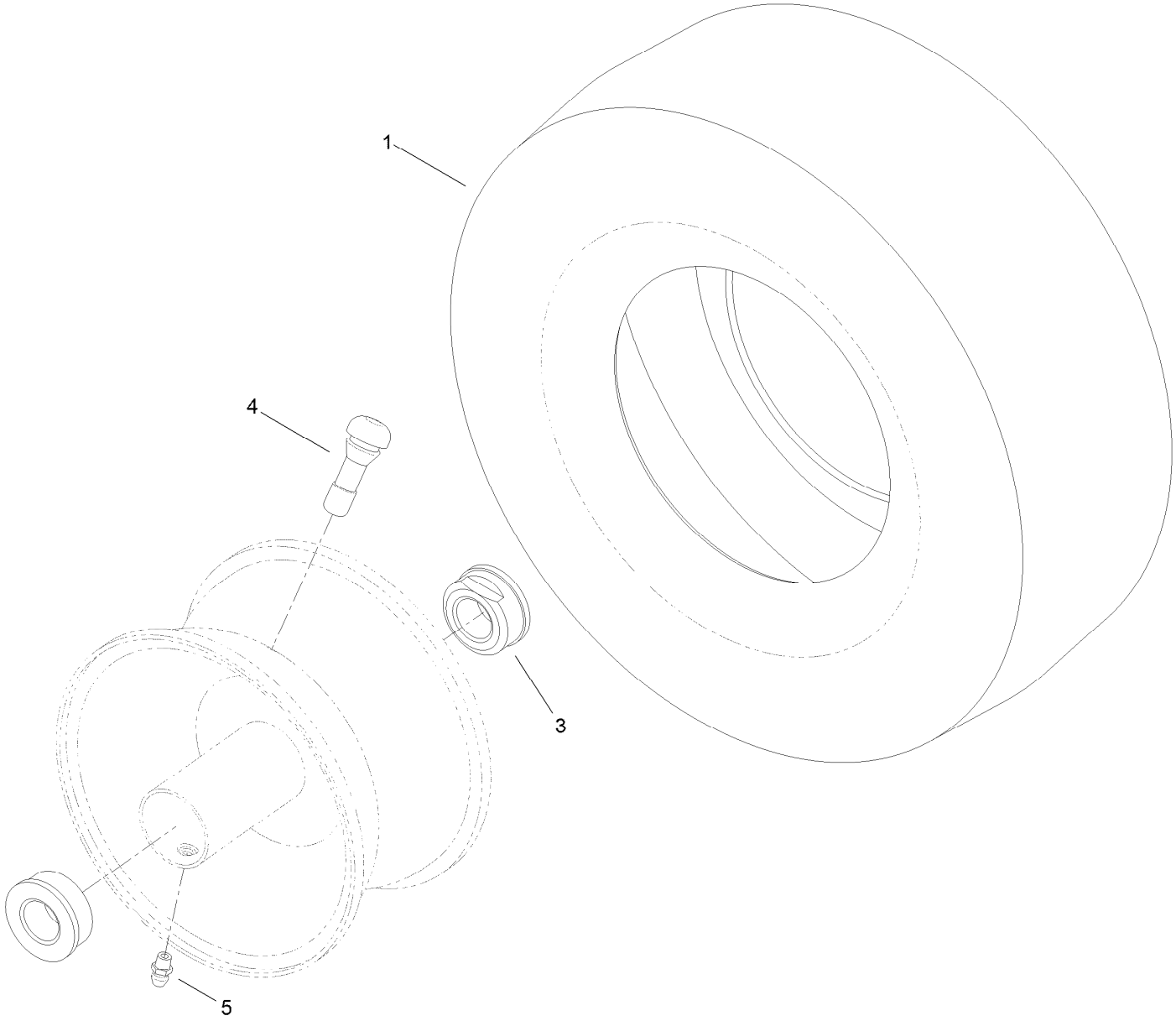

13 Inch Wheel and Tire Assembly No. 119-3473 (continued)

Ref.	Part Number	Qty.	Description
1	119-3471	1	Tire-13 Inch
3	114-1640	2	Bushing-Flange
4	232-27	1	Stem-Valve
5	302-5	1	Fitting-Grease
99	232-46	1	Tube-Inner ●

● Not illustrated

Deck Lift Assembly

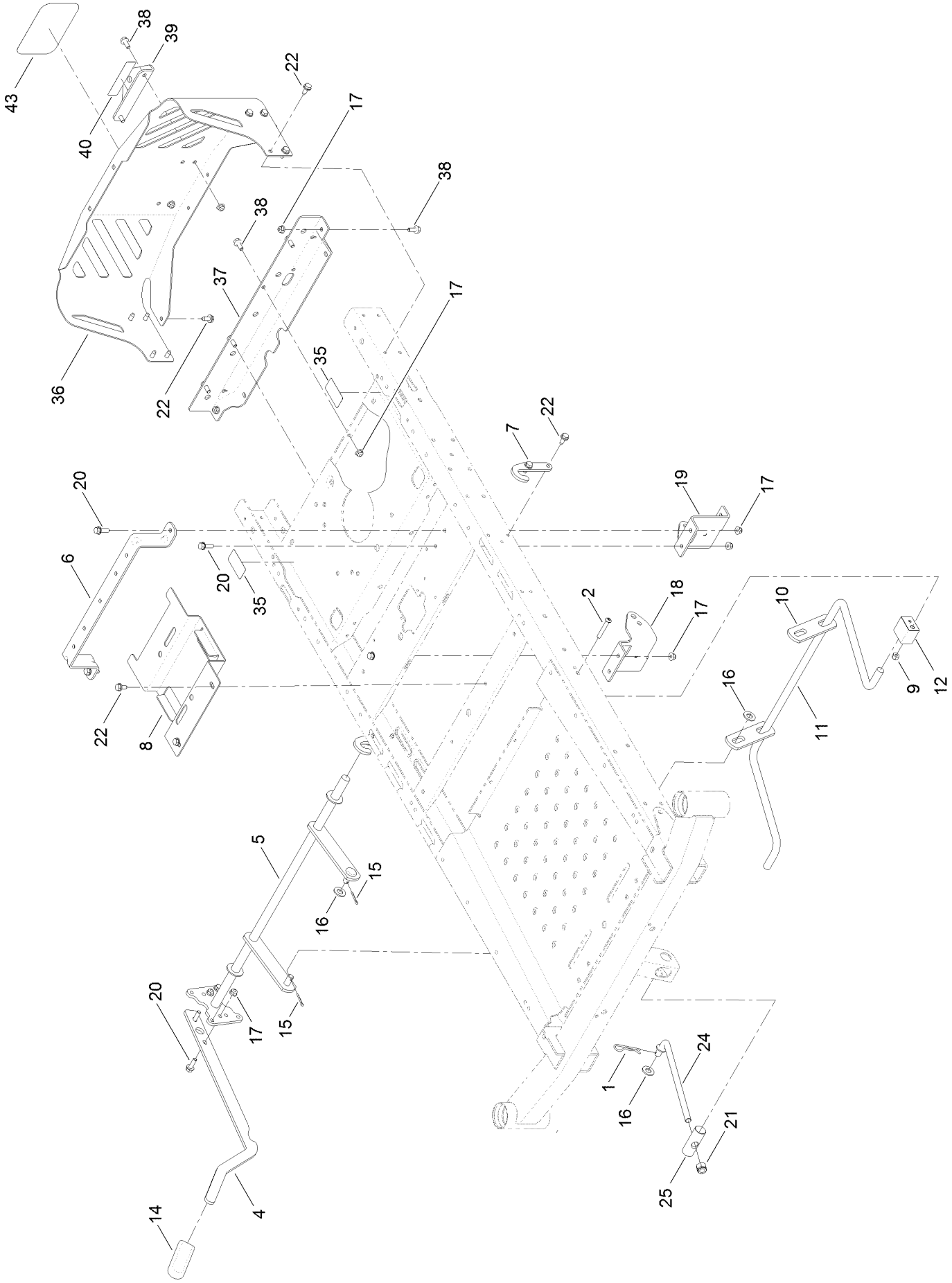

Deck Lift Assembly (continued)

Ref.	Part Number	Qty.	Description
1	1-806005	1	Pin-Cotter
2	120-5499	2	Screw-HSBH
4	119-3427-03	1	Lever-Lift
5	132-6878-03	1	Lift-Deck, Wide
6	117-7337-03	1	Brace-Seat, Rear
7	119-8875	2	Bracket-Lift
8	131-0914-03	1	Bracket-Battery
9	3296-29	2	Nut-Lock, NI
10	108-7840	2	Link-Lift
11	119-3347	1	Arm-Lift, Rear (Wide)
12	108-7845	2	Block-Pivot
14	1-633268	1	Grip-Lever
15	3272-11	2	Pin-Cotter
16	3256-26	3	Washer-Flat
17	104-8300	14	Nut-HF, NI
18	131-0901-01	1	Mount-Hydro, Front (RH)
19	131-0902-01	1	Mount-Hydro, Front (LH)
20	3234-29	6	Screw-HHF
21	3296-19	1	Nut-Hex
22	32144-70	16	Screw-HWHTF
24	131-3945	1	Rod-Mount, Deck
25	119-8810	1	Pin-Pivot
35	121-2989	2	Decal-Bypass
36	130-0701-03	1	Guard-Engine, Wide
37	130-6946-01	1	Crossmember-Rear, Wide
38	3234-47	8	Screw-HHF
39	117-1232-03	1	Bracket-Hitch
40	131-4036	1	Decal
43	99-4693	1	Decal

Motion Control Assembly

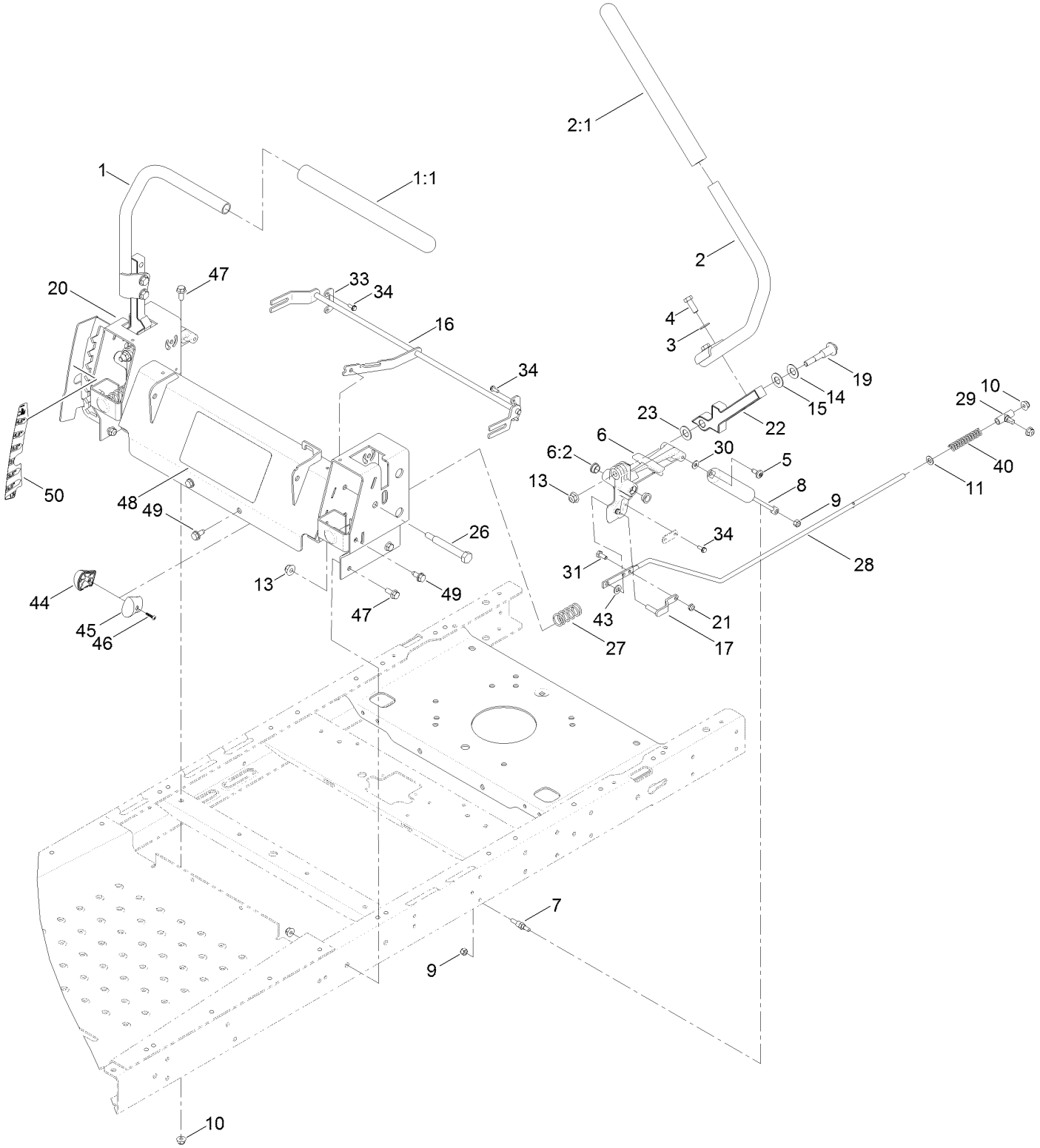

Motion Control Assembly (continued)

Ref.	Part Number	Qty.	Description
1	121-0731	1	Handle-Control, RH
1:1	121-0726	1	Grip
2	121-0730	1	Handle-Control, LH
2:1	121-0726	1	Grip
3	3256-24	4	Washer-Flat
4	323-6	4	Screw-HH
5	120-7950	2	Screw-Shoulder
6	119-3470	2	Actuator Arm ASM
6:2	256-156	2	Bushing-Flange
7	110-6810	2	Stud-Damper
8	131-4132	2	Damper
9	3296-42	4	Nut-Lock, NI
10	104-8300	10	Nut-HF, NI
11	3256-23	2	Washer-Plain
13	104-8301	4	Nut-HF, NI
14	119-8925	2	Washer-Belleville
15	117-1240	2	Washer
16	131-1062	1	Speed Control ASM
17	119-3303	2	Pin-Rod, Hydro
19	117-1198	2	Bolt-Pivot
20	131-1060-03	1	Control Box ASM

Ref.	Part Number	Qty.	Description
21	3296-56	2	Nut-Lock, NI
22	115-5098-05	2	Lever-Control
23	120-2273	2	Washer-Nylon
26	115-5099	2	Bolt-Pivot
27	119-8876	2	Spring-Return
28	117-5388	2	Rod-Hydro
29	119-8842	2	Mount-Rod, Hydro
30	119-8952	2	Washer
31	321-3	2	Screw-HH
33	117-5385	2	Retainer
34	32144-1	4	Screw-Taptite
40	1-603807	2	Spring-Return, Neutral
43	93-6079	2	Spacer-Nylon
44	119-8935	1	Knob-RH
45	119-8936	1	Knob-LH
46	94-4496	1	Screw-PPH
47	3234-47	6	Screw-HHF
48	131-3948	1	Decal-Control, Speed
49	32144-70	4	Screw-HWHTF
50	120-5470	1	Decal-HOC

Brake Assembly

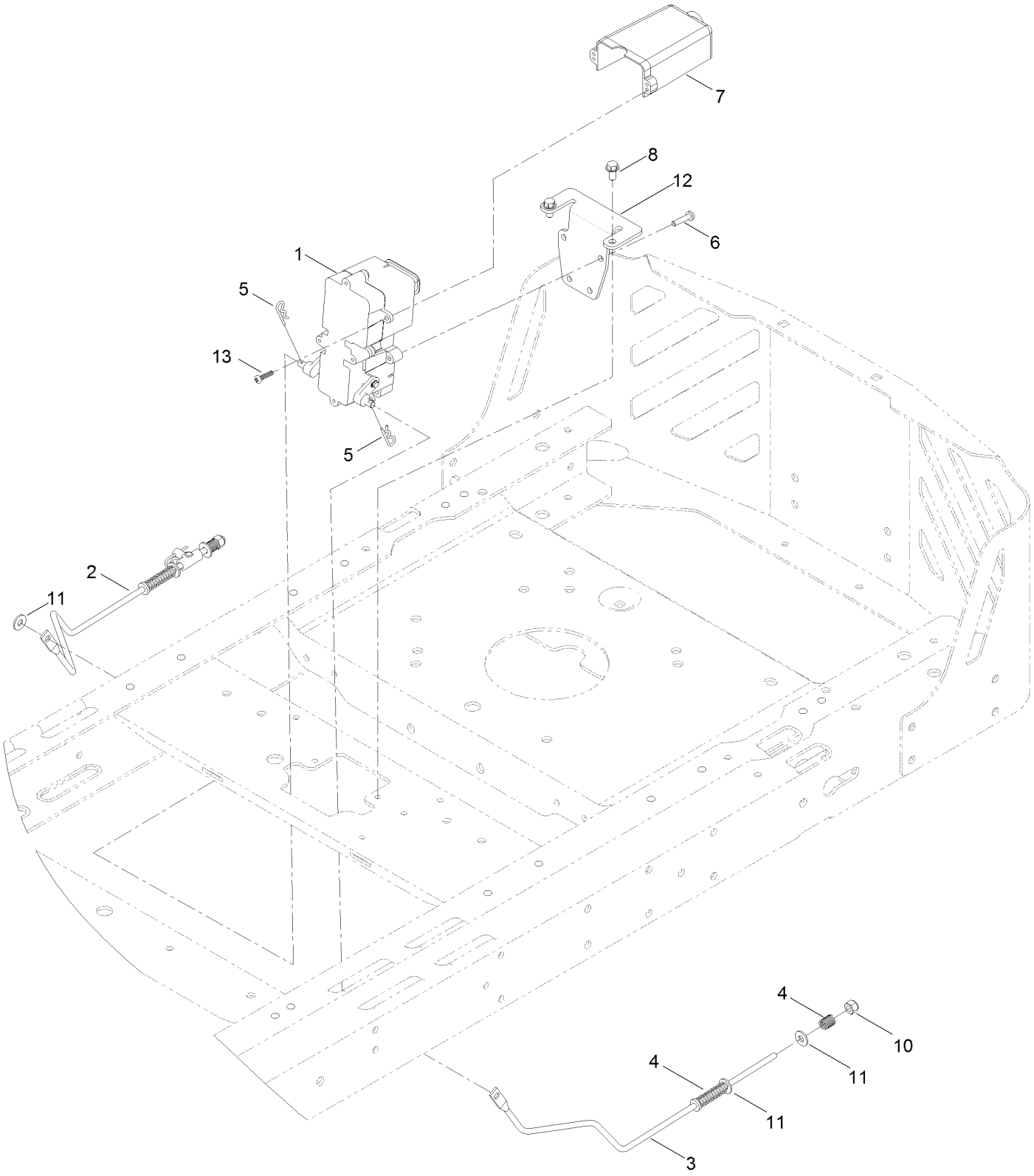

Brake Assembly (continued)

Ref.	Part Number	Qty.	Description
1	132-0935	1	Brake Box ASM
2	121-2976	1	Rod-Brake, Wide (RH)
3	121-2977	1	Rod-Brake, Wide (LH)
4	117-1169	4	Spring-Compression
5	3290-307	2	Pin-Cotter
6	32144-36	4	Screw-PPH
7	130-6974	1	Cover-Connector
8	32144-4	2	Screw-HWH
10	3296-42	2	Nut-Lock, NI
11	119-8952	6	Washer
12	130-0790-03	1	Bracket-Mount, Brake
13	94-4496	2	Screw-PPH

Seat Assembly

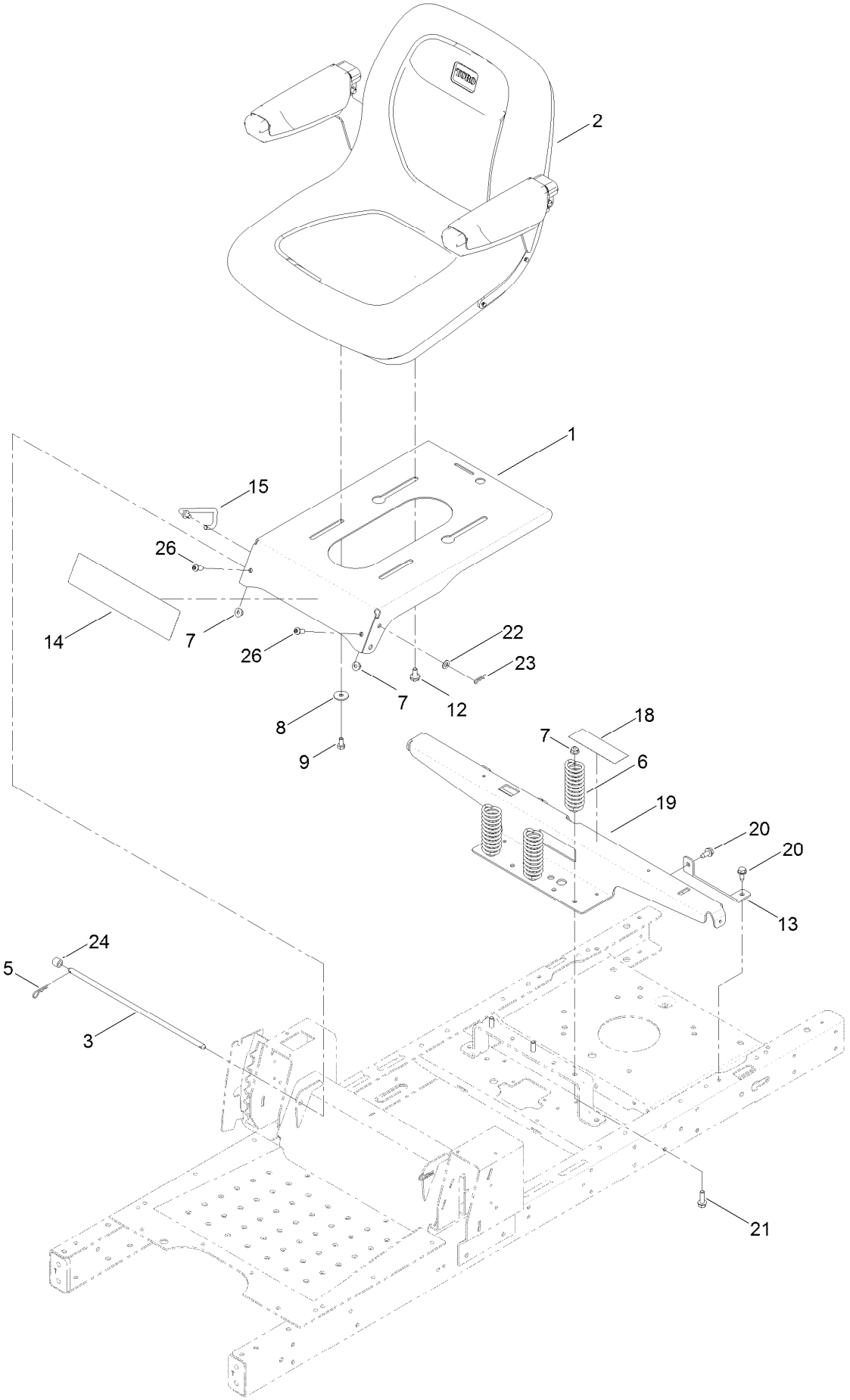

Seat Assembly (continued)

Ref.	Part Number	Qty.	Description
1	131-4037-01	1	Pan-Seat
2	119-8830	1	Seat-18 Inch
2:1	105-6978	1	Armrest Kit (Milsco) ●
3	115-4966	1	Rod-Stop
5	3290-250	2	Pin-Cotter
6	92-7054	3	Spring-Compression
7	104-8300	5	Nut-HF, NI
8	5-4460	2	Washer-Pivot
9	322-2	2	Screw-HH
12	37-8771	2	Bolt-Shoulder
13	119-3431-03	2	Support-Tank, Rear
14	121-3036	1	Decal-Timecutter
15	119-8972	1	Stop-Seat
18	106-8717	1	Decal-Service, CE
19	131-1039-03	1	Support-Pod, Wide
20	32144-70	4	Screw-HWHTF
21	3234-29	3	Screw-HHF
22	3256-23	1	Washer-Plain
23	3290-307	1	Pin-Cotter
24	1-413088	2	Bushing-Lever, Lift
26	3274-55	2	Screw-HSBH

● Not illustrated

Belt and Idler Assembly

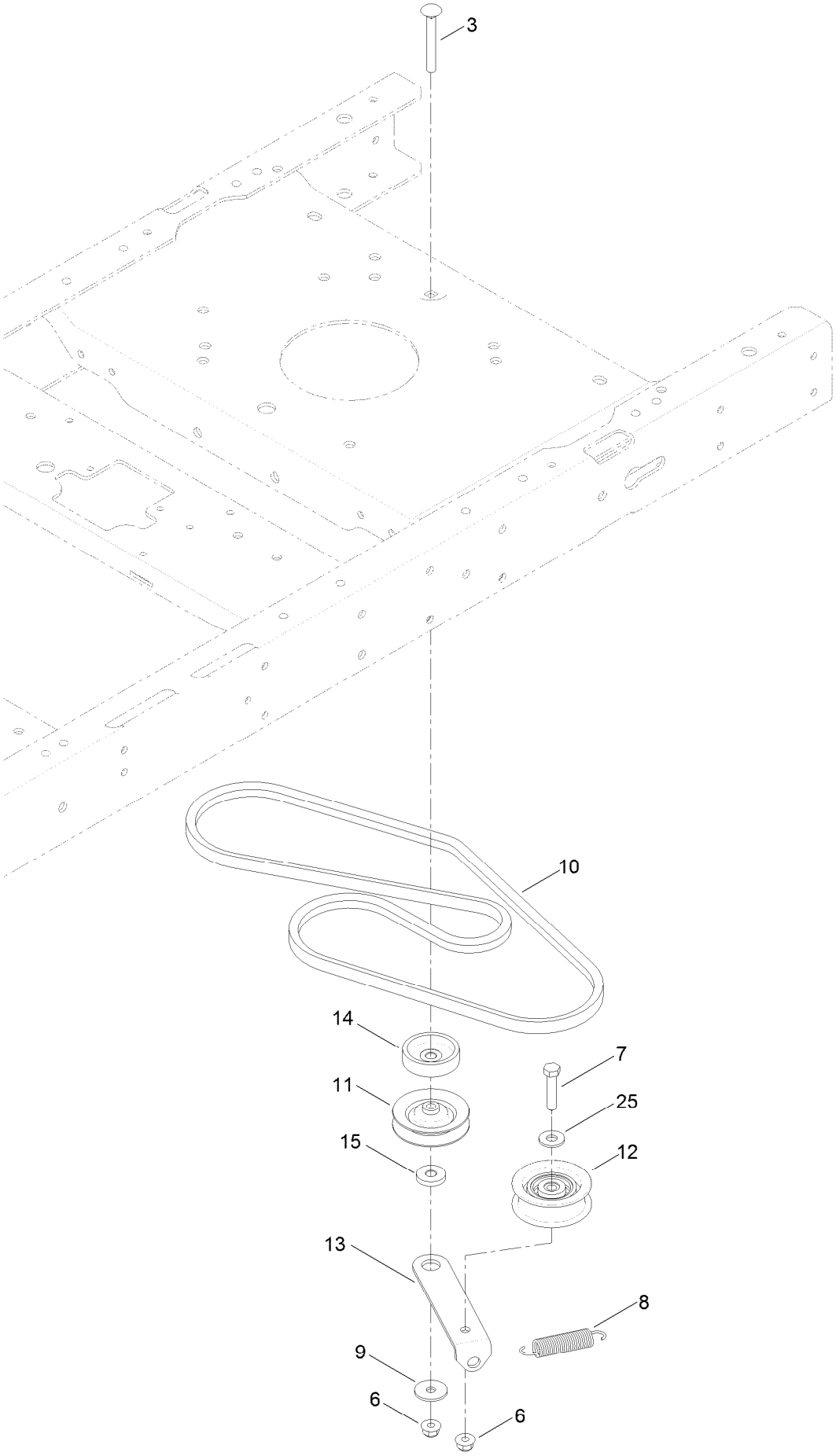

Belt and Idler Assembly (continued)

Ref.	Part Number	Qty.	Description
3	3230-8	1	Screw-CARR
6	104-8300	2	Nut-HF, NI
7	322-7	1	Screw-HH
8	104-6415	1	Spring-Return, Pedal
9	5-4460	1	Washer-Pivot
10	130-6976	1	V-Belt
11	119-8822	1	Pulley-Idler
12	106-2176	1	Pulley-Idler
13	119-3326	1	Arm-Idler
14	119-3353	1	Spacer
15	119-3327	1	Spacer-Arm, Idler
25	3256-3	1	Washer-Flat

Hydro Transaxle Drive and Rear Wheel Assembly

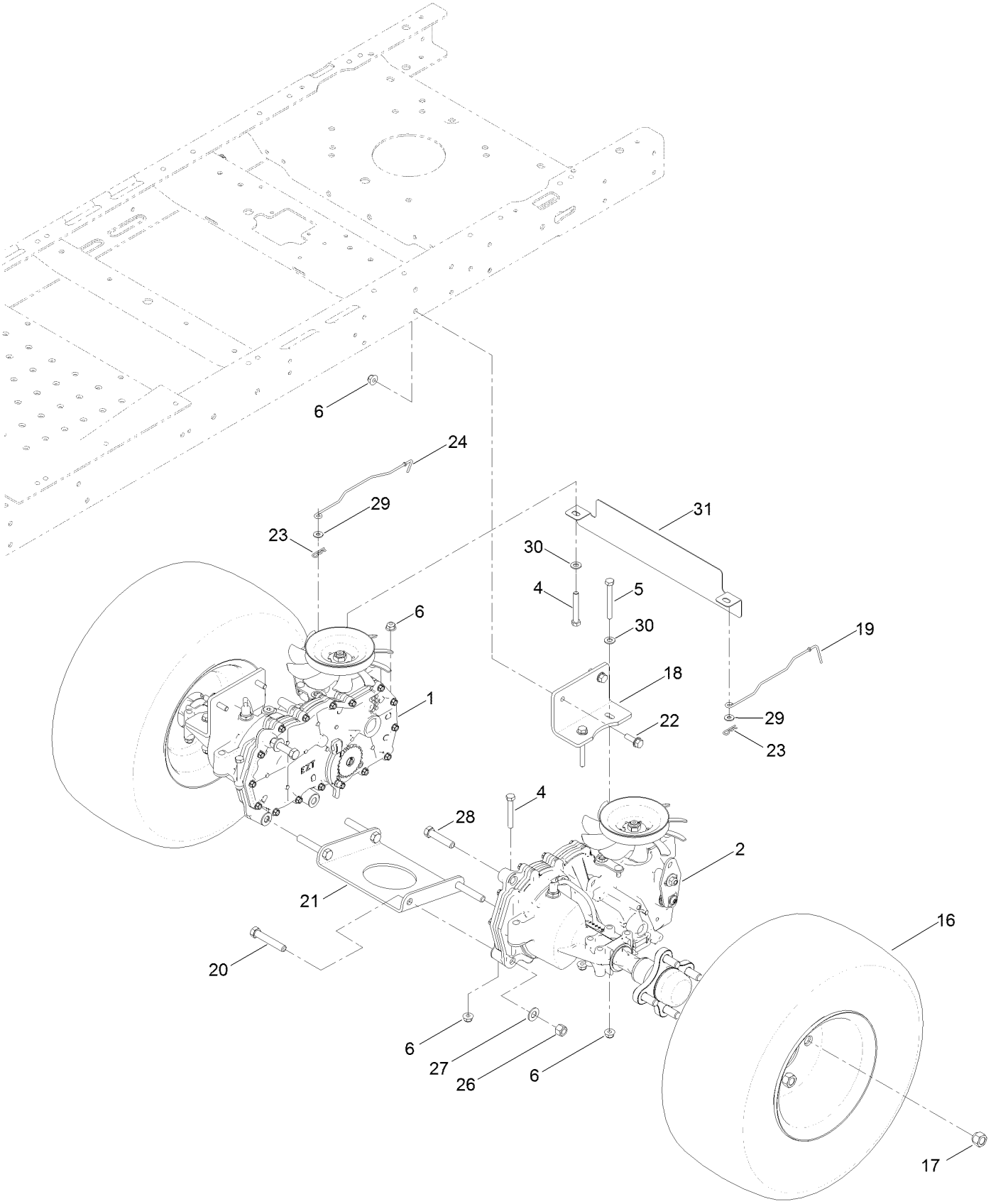

Hydro Transaxle Drive and Rear Wheel Assembly (continued)

Ref.	Part Number	Qty.	Description
1	119-3351	1	RH Hydro Transaxle ASM
2	119-3350	1	LH Hydro Transaxle ASM
4	322-11	4	Screw-HH
5	322-13	4	Screw-HH
6	104-8300	12	Nut-HF, NI
16	131-3672	2	2 Ply Tire And Wheel ASM
17	242-50	8	Nut-Lug
18	117-7264-03	2	Mount-Hydro
19	131-0900	1	Rod-Bypass, LH
20	324-10	4	Screw-HH

Ref.	Part Number	Qty.	Description
21	119-3342-03	1	Plate-Cross, Hydro
22	3234-29	4	Screw-HHF
23	3290-307	2	Pin-Cotter
24	130-7049	1	Rod-Bypass, RH
26	3296-48	6	Nut-Lock, NI
27	3256-25	6	Washer-Flat
28	324-8	2	Screw-HH
29	119-8952	2	Washer
30	3256-23	6	Washer-Plain
31	131-1098-03	1	Guard Rear, Wide

2 Ply Wheel and Tire Assembly No. 131-3672

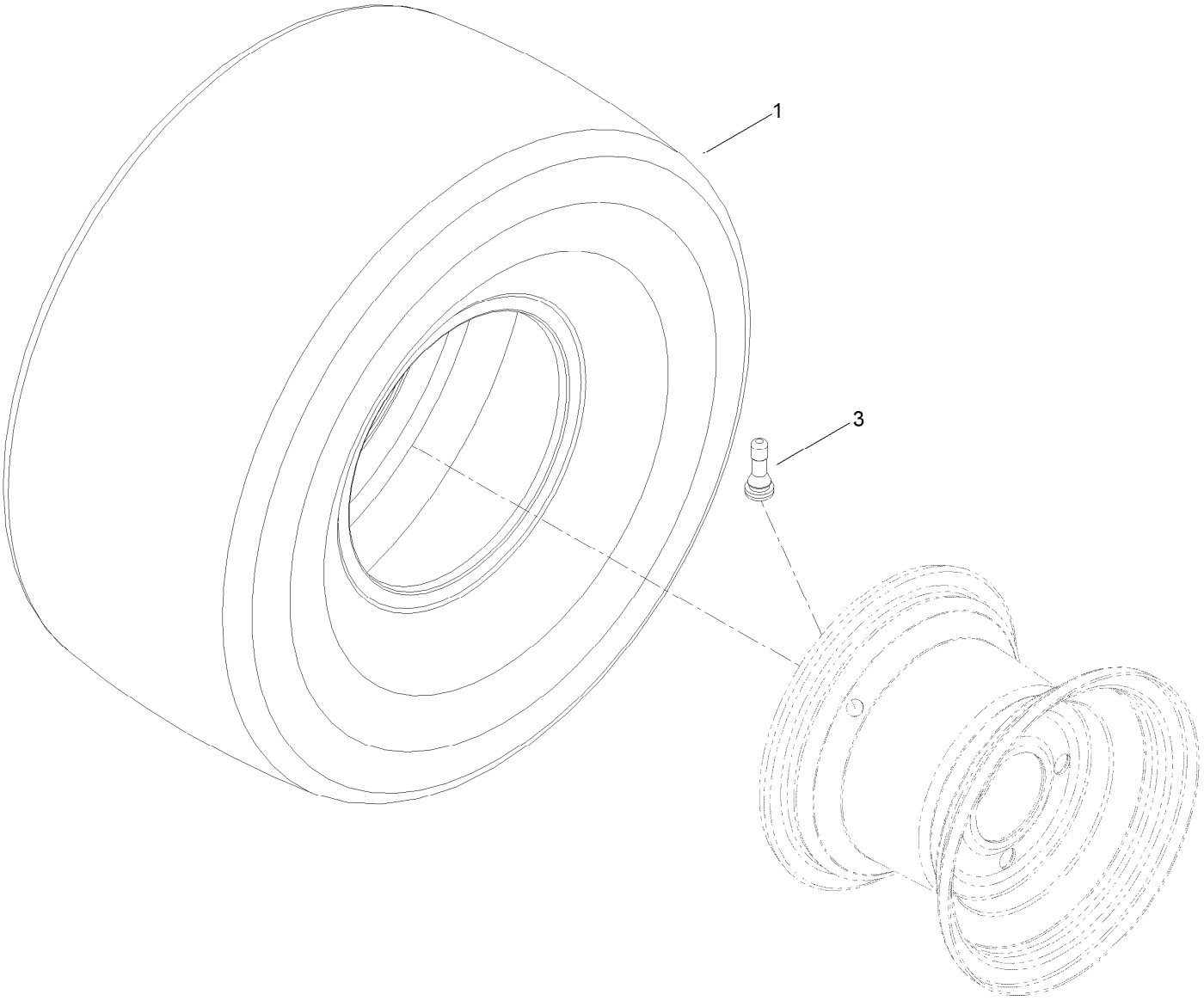

2 Ply Wheel and Tire Assembly No. 131-3672 (continued)

Ref.	Part Number	Qty.	Description
1	131-3679	1	Tire-2Ply
3	232-27	1	Stem-Valve
99	232-37	1	Tube ●

● Not illustrated

Left Hand Hydro Transaxle Assembly No. 119-3350

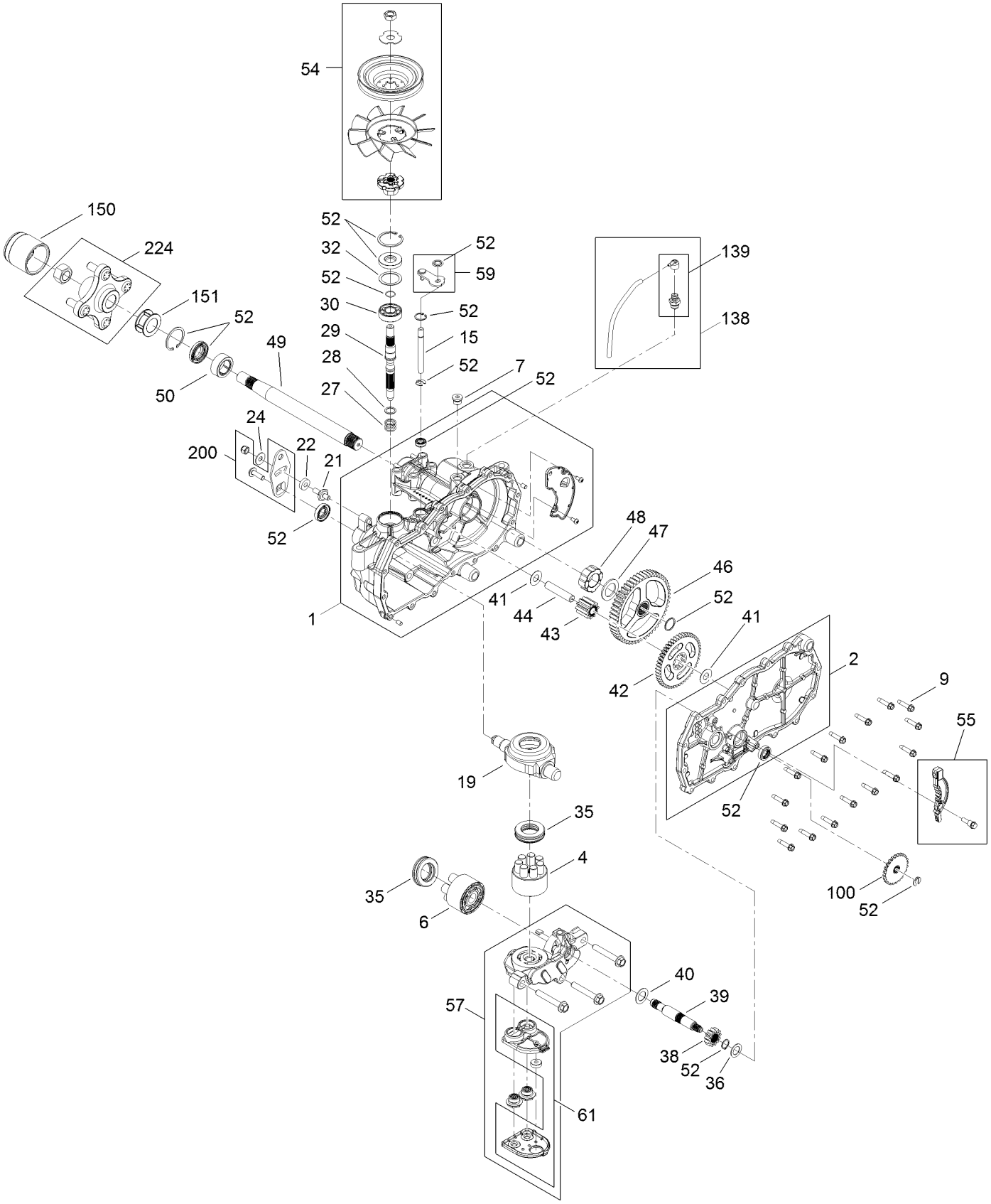

Left Hand Hydro Transaxle Assembly No. 119-3350 (continued)

Ref.	Part Number	Qty.	Description
1	106-8695	1	Main Housing ASM
2	106-8696	1	Side ASM
4	110-8561	1	Pump Block ASM
6	103-2666	1	Cylinder Block Kit
7	104-2189	1	Plug-Thread, Straight
9	104-5305	16	Screw-HHF
15	106-8678	1	Rod-Bypass
19	104-5304	1	Swashplate-Trunnion
21	104-2116	1	Stud
22	112-9853	1	Puck-Friction
24	114-8491	1	Washer
27	120-5537	1	Spring-Compression
28	120-5538	1	Washer
29	104-5306	1	Shaft-Input
30	104-5311	1	Bearing-Ball
32	104-5308	1	Spacer
35	94-6922	2	Bearing-Thrust
36	104-5339	1	Washer-Flat
38	104-5316	1	Gear-Pinnion, 13T
39	106-8683	1	Shaft-Motor
40	104-5360	1	Washer
41	119-5541	2	Washer
42	104-5317	1	Gear-10T/48T
43	104-5318	1	Gear-Jackshaft, 10T
44	104-5329	1	Pin-Jackshaft
46	112-9855	1	Gear-52T, Bull
47	112-9856	1	Washer
48	112-9857	1	Bearing-Sleeve
49	120-7104	1	Shaft-Axle
50	112-9859	1	Bushing-Axle
52	106-8686	1	Seal Kit ●
54	121-5746	1	Fan Pulley Kit
55	106-8688	1	Brake Arm Kit
57	112-9861	1	Center Section Filter Kit
58	104-2147	1	Sealant ●
59	120-5549	1	Bypass Kit
61	114-1634	1	Filter Kit
100	106-8694	1	Disc-Brake, Cog
138	112-9866	1	Breather Kit
139	114-1635	1	Breather ASM
150	115-5057	1	Cover-Nut, Axle
151	120-7109	1	Tube-Axle
200	117-5362	1	Control Arm Kit
224	109-5939	1	Hub Kit

● Not illustrated

Right Hand Hydro Transaxle Assembly No. 119-3351

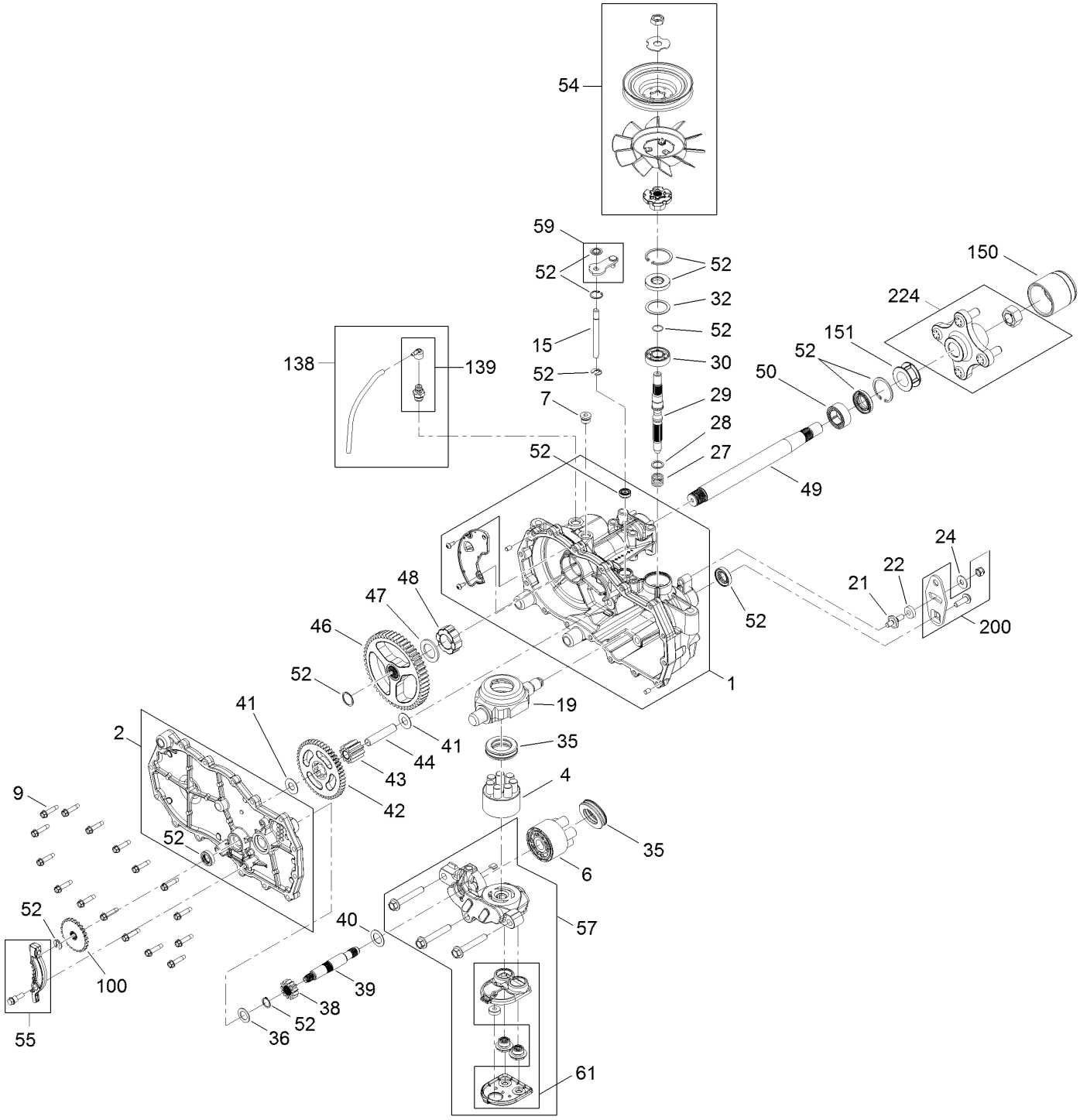

Right Hand Hydro Transaxle Assembly No. 119-3351 (continued)

Ref.	Part Number	Qty.	Description
1	106-8674	1	Main Housing ASM
2	106-8675	1	Side ASM
4	110-8561	1	Pump Block ASM
6	103-2666	1	Cylinder Block Kit
7	104-2189	1	Plug-Thread, Straight
9	104-5305	16	Screw-HHF
15	106-8678	1	Rod-Bypass
19	104-5304	1	Swashplate-Trunnion
21	104-2116	1	Stud
22	112-9853	1	Puck-Friction
24	114-8491	1	Washer
27	120-5537	1	Spring-Compression
28	120-5538	1	Washer
29	104-5306	1	Shaft-Input
30	104-5311	1	Bearing-Ball
32	104-5308	1	Spacer
35	94-6922	2	Bearing-Thrust
36	104-5339	1	Washer-Flat
38	104-5316	1	Gear-Pinnion, 13T
39	106-8683	1	Shaft-Motor
40	104-5360	1	Washer
41	119-5541	2	Washer
42	104-5317	1	Gear-10T/48T
43	104-5318	1	Gear-Jackshaft, 10T
44	104-5329	1	Pin-Jackshaft
46	112-9855	1	Gear-52T, Bull
47	112-9856	1	Washer
48	112-9857	1	Bearing-Sleeve
49	120-7104	1	Shaft-Axle
50	112-9859	1	Bushing-Axle
52	106-8686	1	Seal Kit ●
54	121-5746	1	Fan Pulley Kit
55	106-8688	1	Brake Arm Kit
57	112-9862	1	Center Section Filter Kit
58	104-2147	1	Sealant ●
59	107-2489	1	Bypass Arm Kit
61	114-1634	1	Filter Kit
100	106-8694	1	Disc-Brake, Cog
138	112-9866	1	Breather Kit
139	114-1635	1	Breather ASM
150	115-5057	1	Cover-Nut, Axle
151	120-7109	1	Tube-Axle
200	117-5362	1	Control Arm Kit
224	109-5939	1	Hub Kit

● Not illustrated

Clutch Assembly

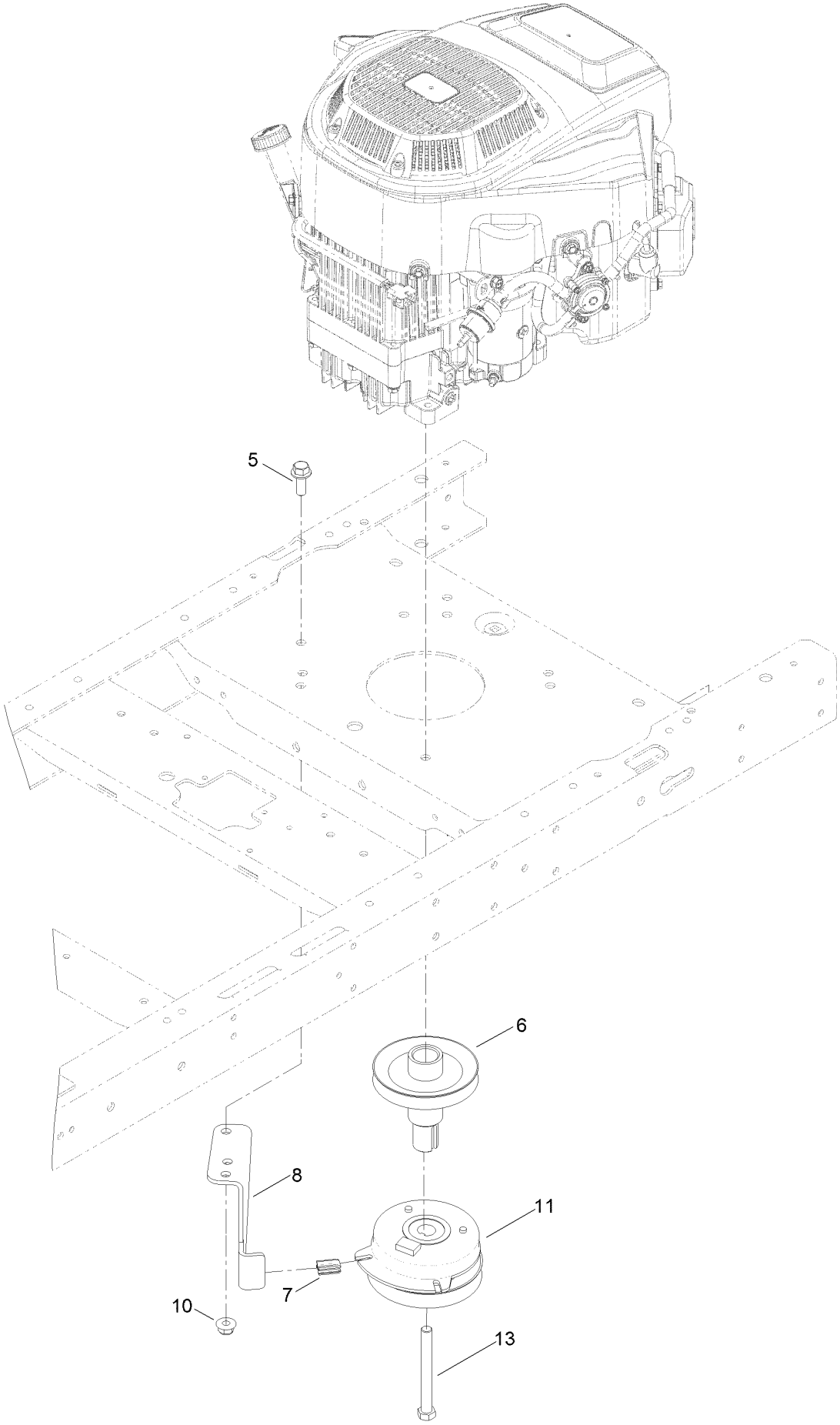

Clutch Assembly (continued)

Ref.	Part Number	Qty.	Description
5	3234-42	1	Screw-HHF
6	130-6854	1	Pulley-Engine
7	120-2217	1	Isolator-Clutch
8	119-8885	1	Stop-Clutch
10	104-8301	1	Nut-HF, NI
11	127-3408	1	Clutch-PTO
13	3212-17	1	Screw-HH

Engine and Muffler Assembly

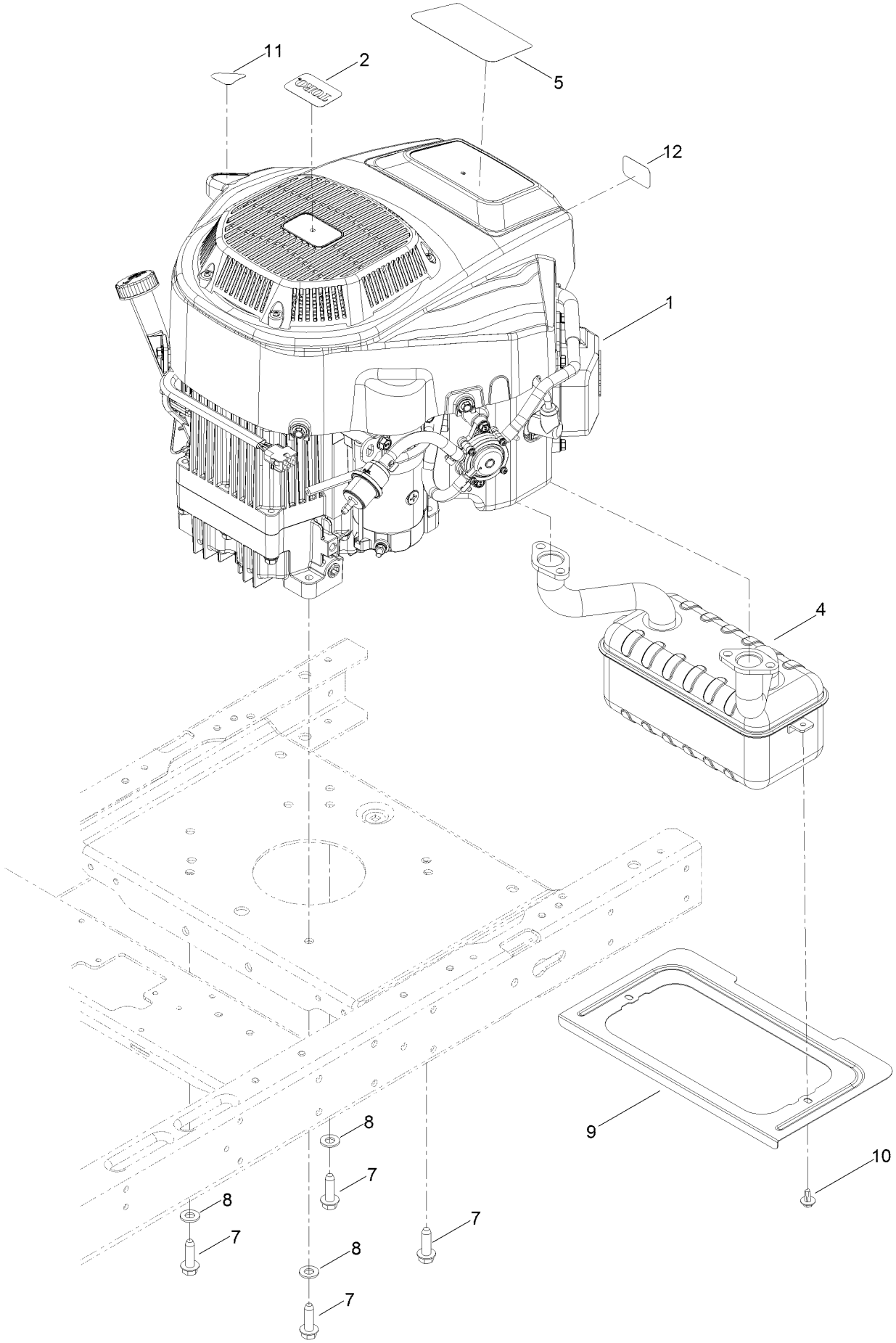

Engine and Muffler Assembly (continued)

Ref.	Part Number	Qty.	Description
1	127-9041	1	Engine-2P77F
2	131-4157	1	Decal
4	130-6851	1	Muffler
5	132-0902	1	Decal-Engine
7	32144-109	4	Screw-Taptite
8	3256-24	3	Washer-Flat
9	131-1071-03	1	Shield-Heat
10	46-8560	2	Screw-HHFTF
11	131-1097	1	Decal-Drain, Oil
12	127-9076	1	Placard-Intake

Fuel System Assembly with Non-Canister Style Air Filter

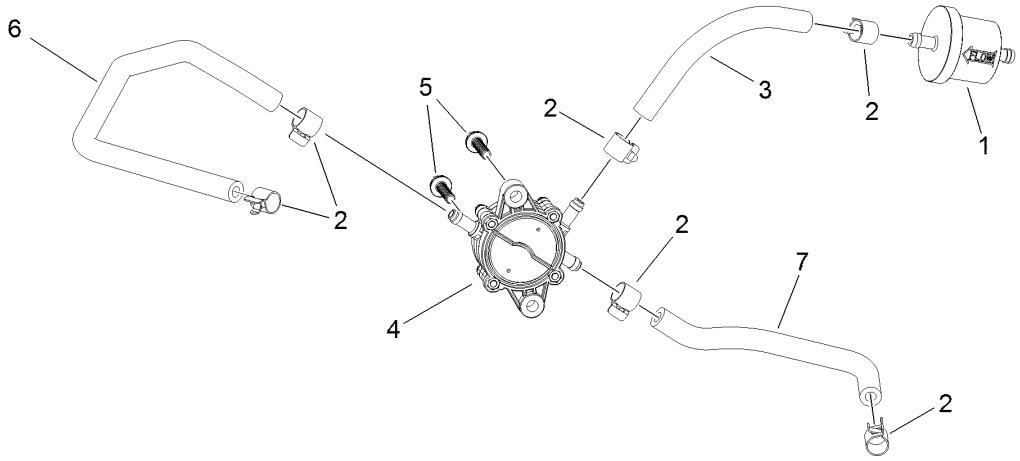

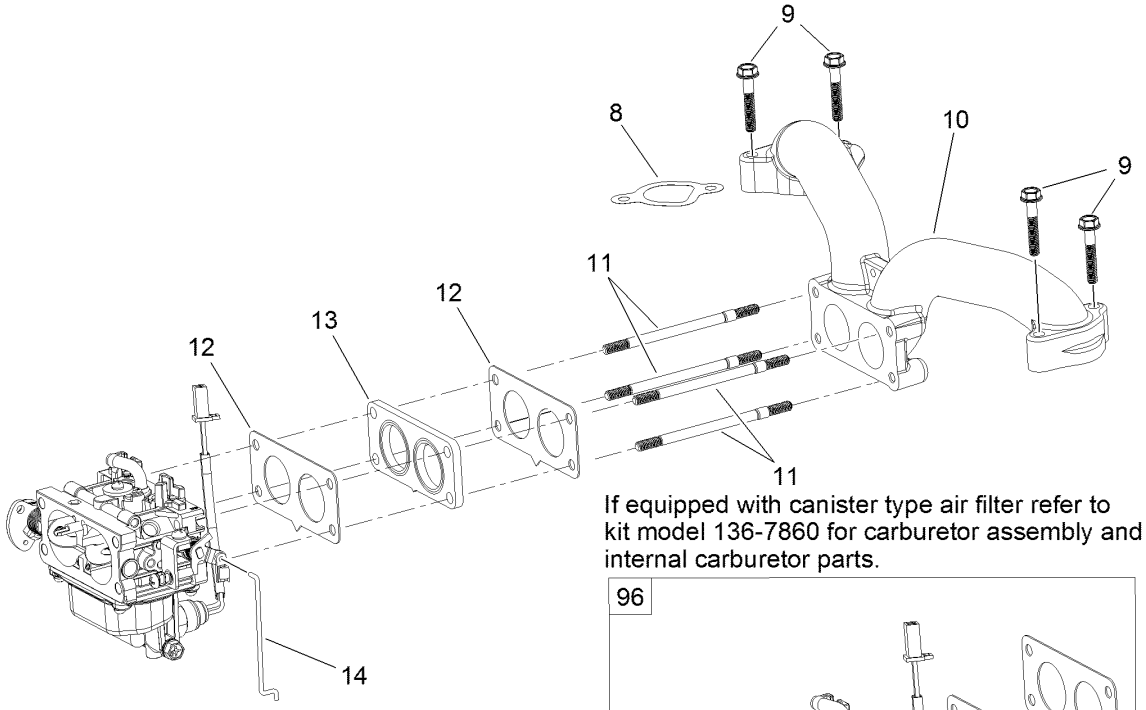

If equipped with canister type air filter refer to kit model 136-7860 for carburetor assembly and internal carburetor parts.

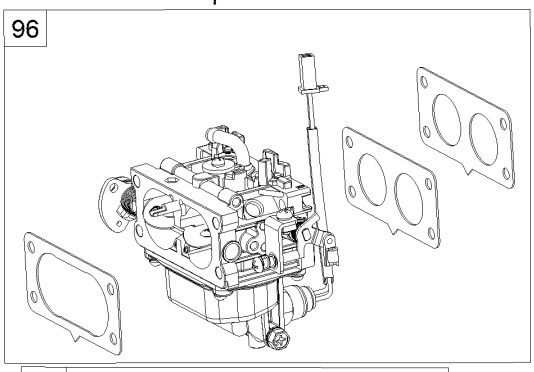

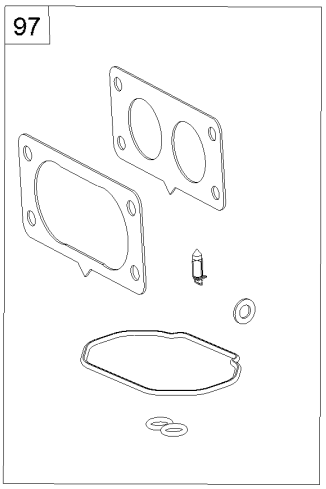

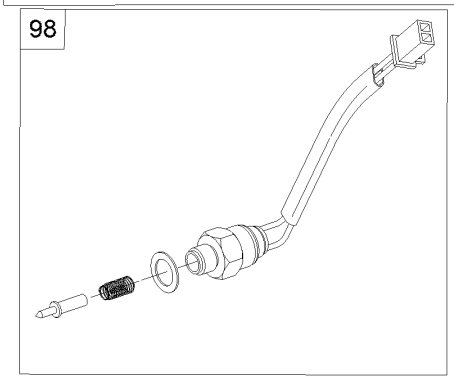

Fuel System Assembly with Non-Canister Style Air Filter (continued)

Ref.	Part Number	Qty.	Description
1	133-1563	1	Filter-Fuel
2	120-4251	6	Clamp-Fuel Line
3	120-4371	1	Line-Fuel
4	127-9206	1	Pump-Fuel
5	120-4225	2	Screw-HHF
6	127-9205	1	Hose-Fuel
7	127-9207	1	Hose-Fuel
8	127-9230	2	Gasket-Intake
9	120-4284	4	Screw-HHF
10	127-9244	1	Manifold-Intake
11	127-9245	4	Stud
12	127-9246	2	Gasket-Carburetor
13	127-9247	1	Insulator-Carburetor
14	127-9248	1	Linkage-Throttle
96	127-9289	1	Carburetor Replacement Kit
97	127-9290	1	Carburetor Repair Kit
98	127-9292	1	Solenoid Kit
99	127-9303	1	High Altitude Kit ●

● Not illustrated

Carburetor Assembly with Non-Canister Style Air Filter

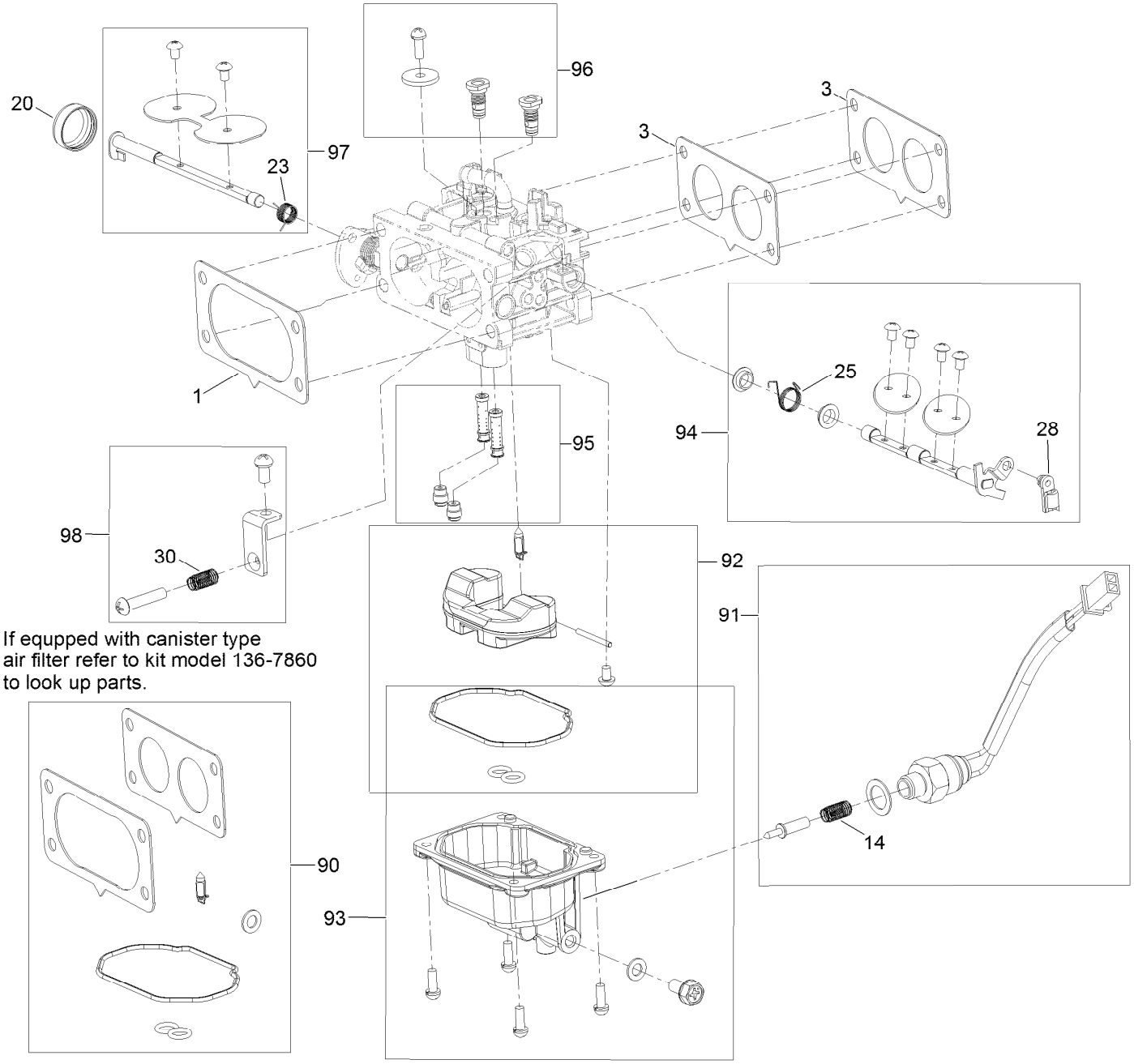

If equpped with canister type air filter refer to kit model 136-7860 to look up parts.

Carburetor Assembly with Non-Canister Style Air Filter (continued)

Ref.	Part Number	Qty.	Description
1	127-9249	1	Carburetor
1	127-9251	1	Gasket-Carburetor
3	127-9246	2	Gasket-Carburetor
14	127-9319	1	Spring
20	127-9325	1	Cover-Shaft, Choke
23	127-9328	1	Spring
25	127-9330	1	Spring
28	127-9333	1	Clamp-Lock
30	127-9335	1	Spring

Ref.	Part Number	Qty.	Description
90	127-9290	1	Carburetor Repair Kit
91	127-9292	1	Solenoid Kit
92	127-9340	1	Float Kit
93	127-9341	1	Bowl Kit
94	127-9342	1	Throttle Shaft Kit
95	127-9343	1	Nozzle And Jet Kit
96	127-9344	1	Air Jet Kit
97	127-9345	1	Choke Shaft Kit
98	127-9347	1	Idlestop Kit

Air Intake and Filtration Assembly with Non-Canister Style Air Filter

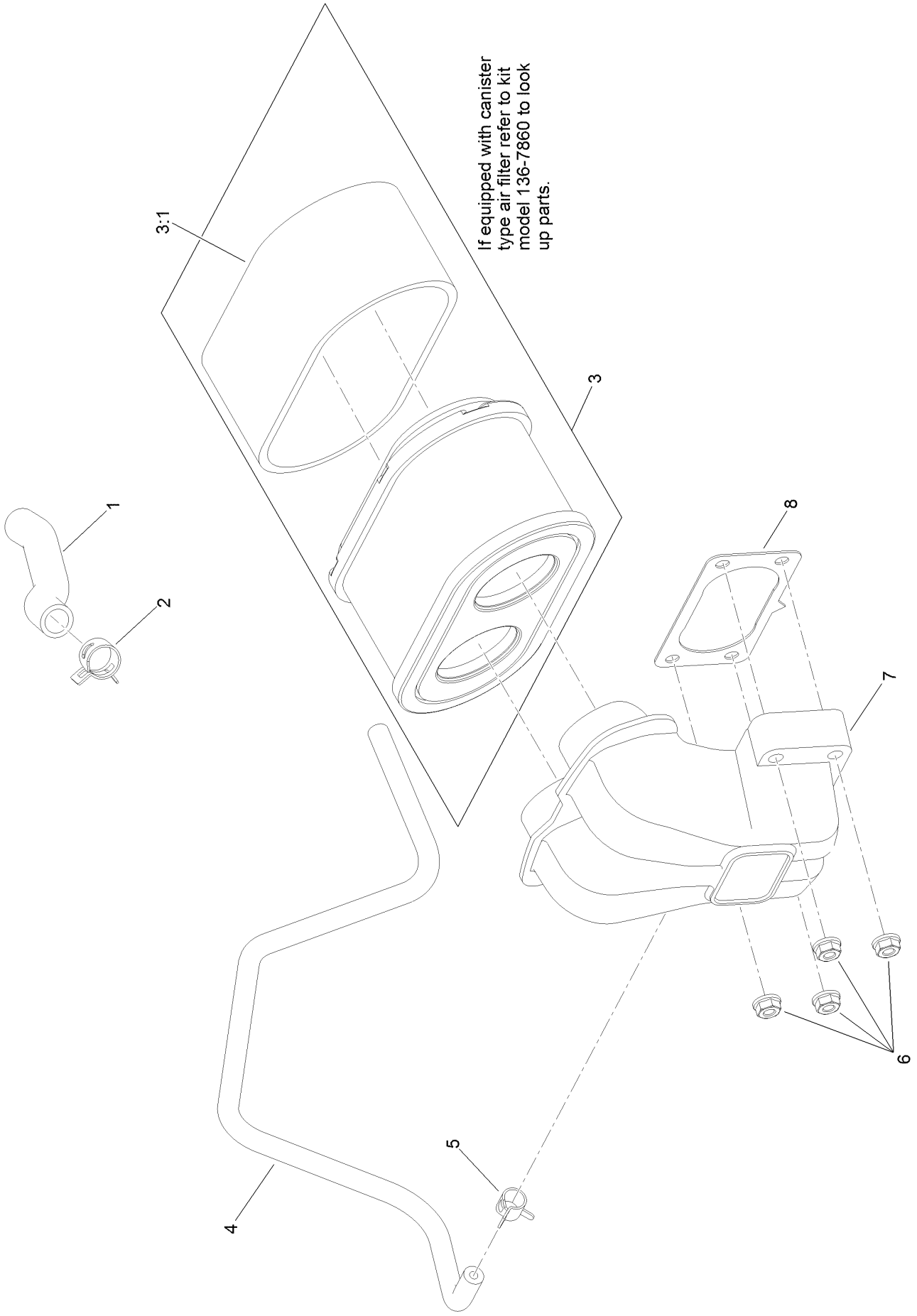

Air Intake and Filtration Assembly with Non-Canister Style Air Filter (continued)

Ref.	Part Number	Qty.	Description
1	127-9235	1	Tube-Breather
2	127-9234	2	Clamp-Hose
3	127-9252	1	Filter-Air, Complete
3:1	127-9288	1	Filter-Pre, Foam
4	127-9253	1	Hose-Fuel
5	127-9187	1	Clamp-Hose
6	120-4236	4	Nut-Flange
7	127-9047	1	Manifold-Filter, Air
8	127-9251	1	Gasket-Carburetor

Ignition and Electrical Assembly

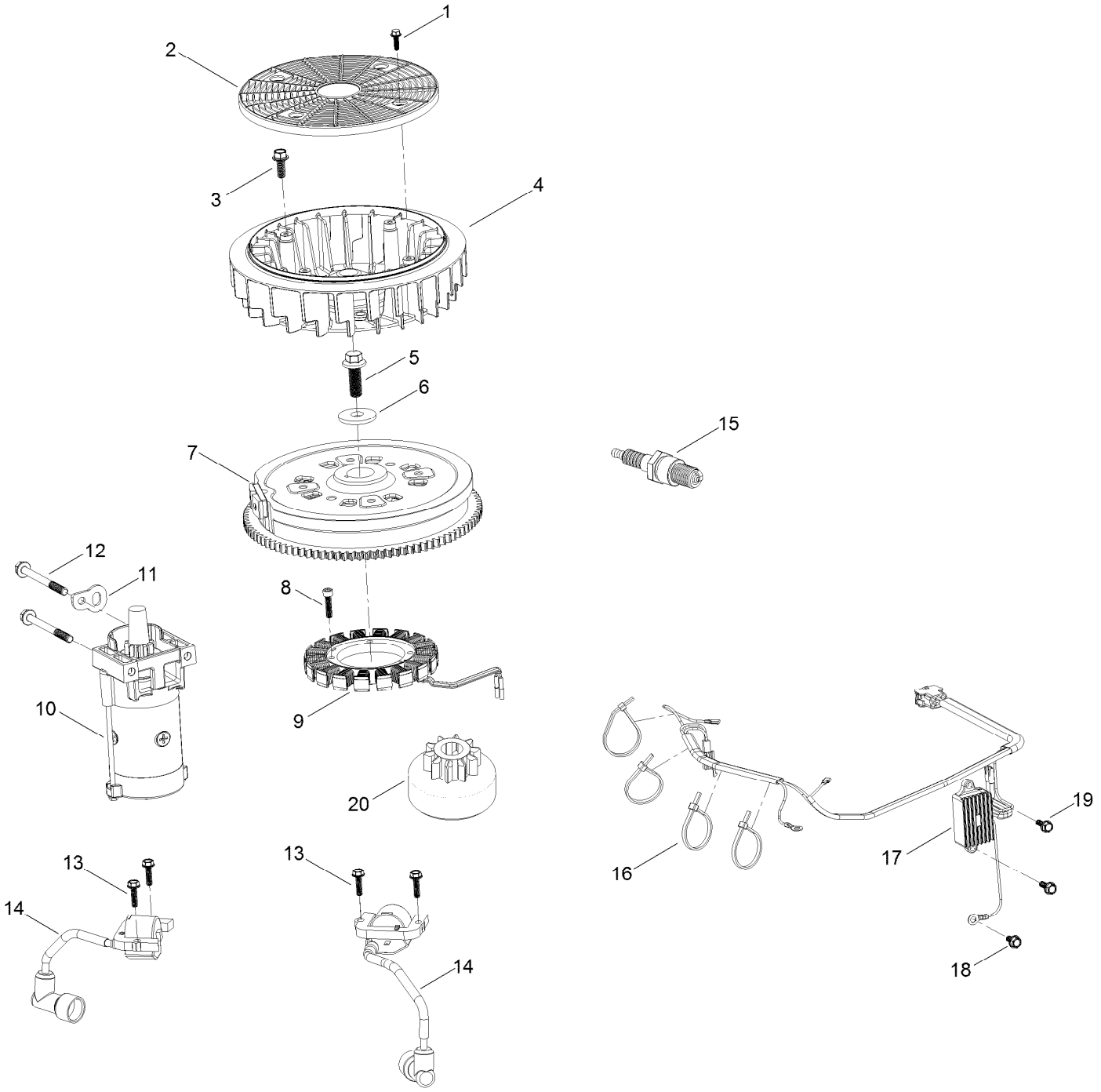

Ignition and Electrical Assembly (continued)

Ref.	Part Number	Qty.	Description
1	127-9197	4	Screw-HWH
2	127-9198	1	Screen-Rotating
3	127-9199	4	Screw-HWH
4	127-9200	1	Fan-Cooling
5	127-9201	1	Screw-HWH
6	127-9202	1	Washer-Flat
7	127-9306	1	Flywheel
8	127-9210	4	Screw-HSH
9	127-9211	1	Alternator
10	133-1564	1	Motor-Starter
11	127-9208	1	Bracket-Lift
12	120-4231	2	Screw-HHF
13	121-0007	4	Bolt-Flange
14	127-9216	2	Ignition Coil ASM
15	81-3250	2	Spark Plug
16	127-9220	4	Tie-Zip
17	127-9219	1	Regulator-Voltage W/Harness
18	120-4216	1	Screw-HHF
19	120-4232	2	Screw-HHF
20	133-1562	1	Pinion-Starter

Crankcase and Crankshaft Assembly

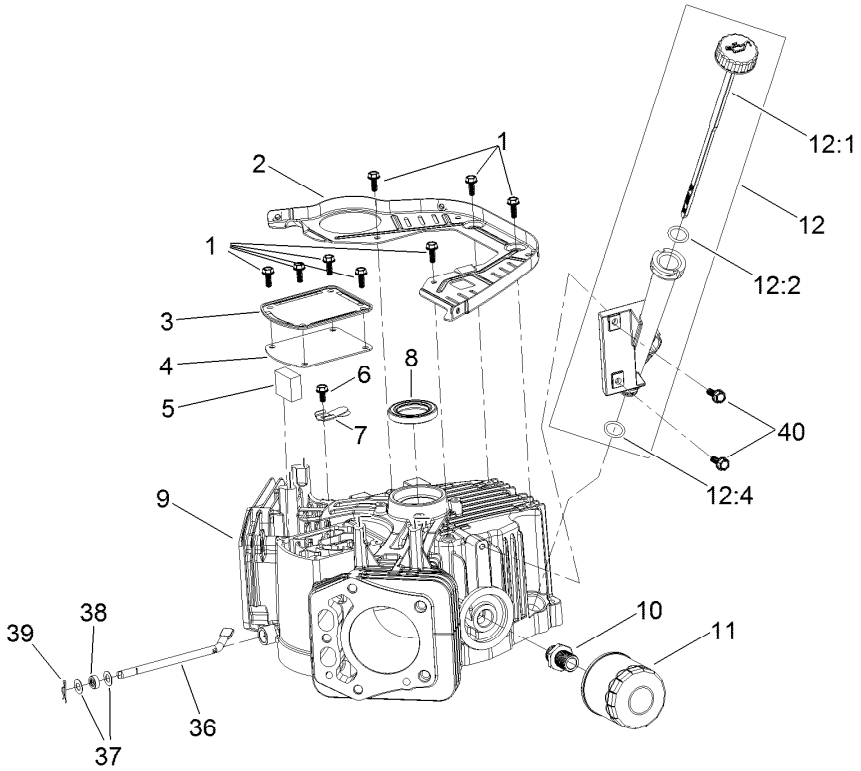

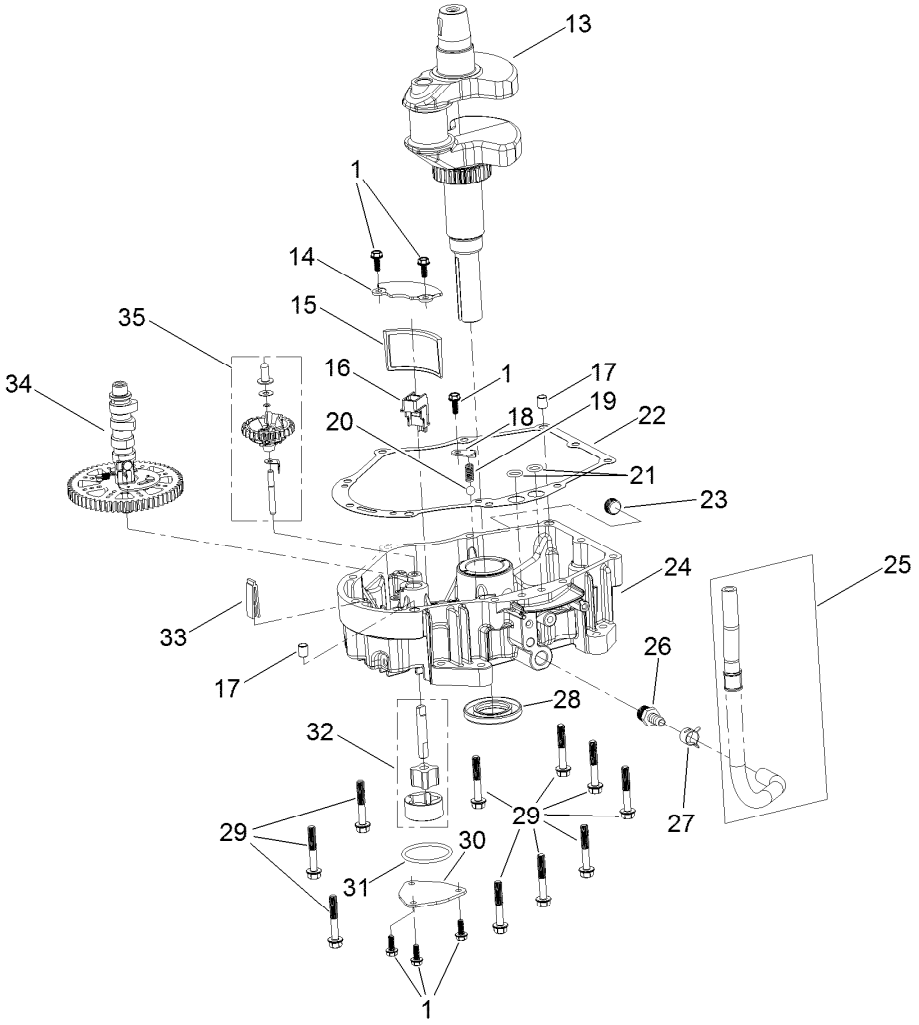

Crankcase and Crankshaft Assembly (continued)

Ref.	Part Number	Qty.	Description
1	120-4232	14	Screw-HHF
2	127-9212	1	Baffle
3	127-9213	1	Cover-Breather
4	127-9214	1	Gasket-Breather
5	127-9215	1	Filter-Breather
6	120-4216	1	Screw-HHF
7	127-9217	1	Valve-Breather
8	120-4267	1	Seal-Oil
9	127-9223	1	Crankcase
10	127-9221	1	Fitting-Threaded, Oil Filter
11	120-4276	1	Filter-Oil
12	127-9218	1	Oil Tube ASM
12:1	127-9283	1	Dipstick
12:2	127-9284	1	O-Ring
12:4	127-9286	1	O-Ring
13	127-9255	1	Crankshaft
14	127-9261	1	Cover-Screen, Oil
15	127-9262	1	Screen-Oil
16	127-9263	1	Retainer-Screen
17	120-4274	2	Pin-Dowel
18	127-9264	1	Plate-Retainer
19	127-9265	1	Spring
20	127-9266	1	Valve-Ball
21	120-4262	2	O-Ring
22	127-9267	1	Gasket-Cover, Crankcase
23	120-4285	1	Plug-Drain
24	127-9268	1	Cover-Crankcase
25	127-9293	1	Oil Drain Hose ASM
26	127-9275	1	Fitting-Hose
27	127-9276	1	Clamp-Hose
28	127-9271	1	Seal
29	121-0473	10	Screw-HHF
30	127-9274	1	Cover-Oil Pump
31	127-9273	1	O-Ring
32	127-9272	1	Oil Pump ASM
33	120-4275	1	Deflector-Oil, Rubber
34	133-1568	1	Camshaft
35	133-1569	1	Governor ASM
36	127-9238	1	Rod-Governor
37	120-4258	2	Washer-Plain
38	120-4257	1	Seal-Oil
39	120-4256	1	Pin-Hair
40	120-4232	2	Screw-HHF

Governor Control Assembly

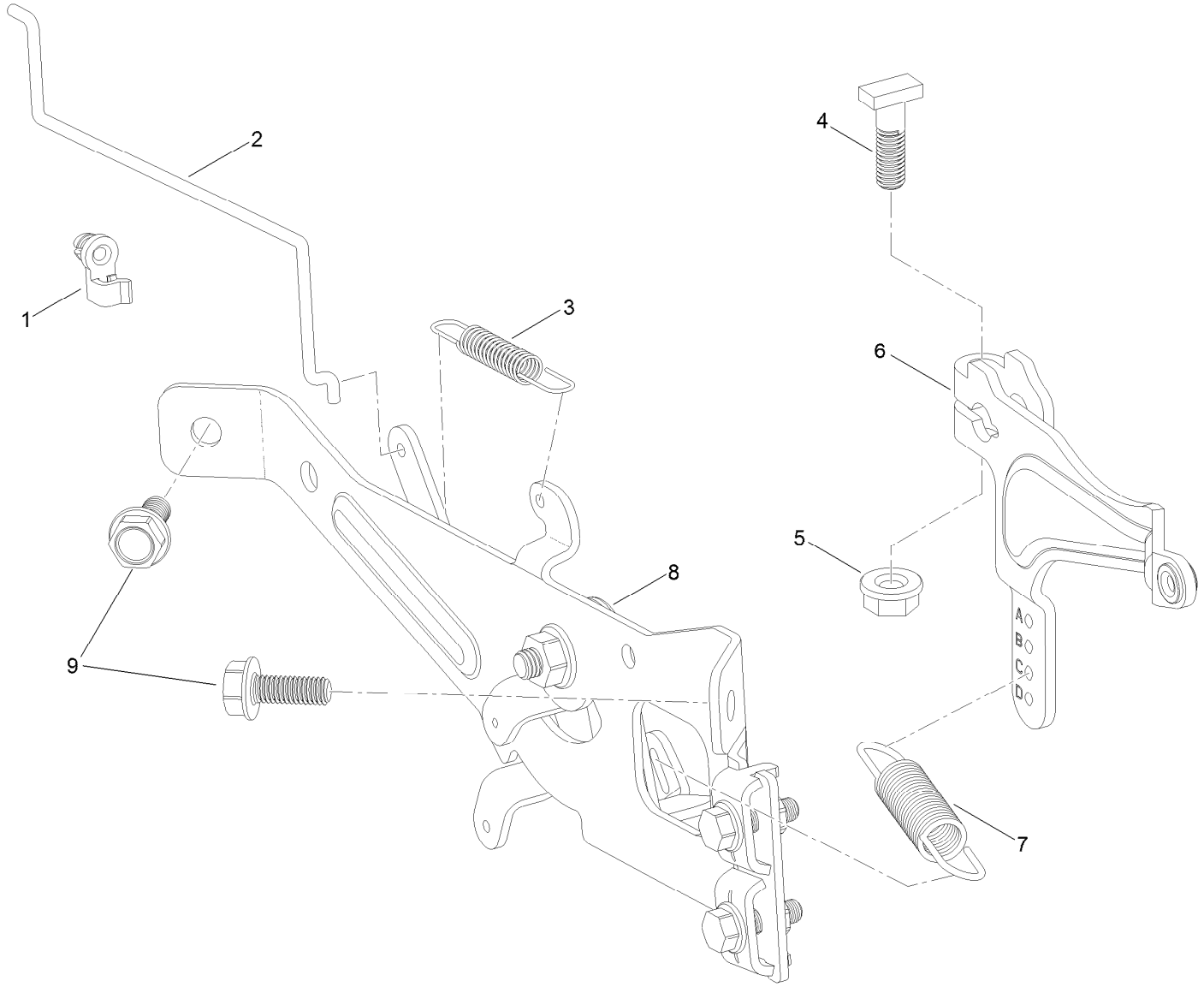

Governor Control Assembly (continued)

Ref.	Part Number	Qty.	Description
1	127-9250	1	Clip-Linkage
2	127-9242	1	Linkage-Choke
3	127-9241	1	Spring-Governor
4	120-4238	1	Bolt-Arm, Governor
5	120-4236	1	Nut-Flange
6	127-9239	1	Arm-Governor
7	127-9240	1	Spring-Governor
8	133-1570	1	Control Plate ASM
9	120-4232	2	Screw-HHF

Piston and Cylinder Head Assembly

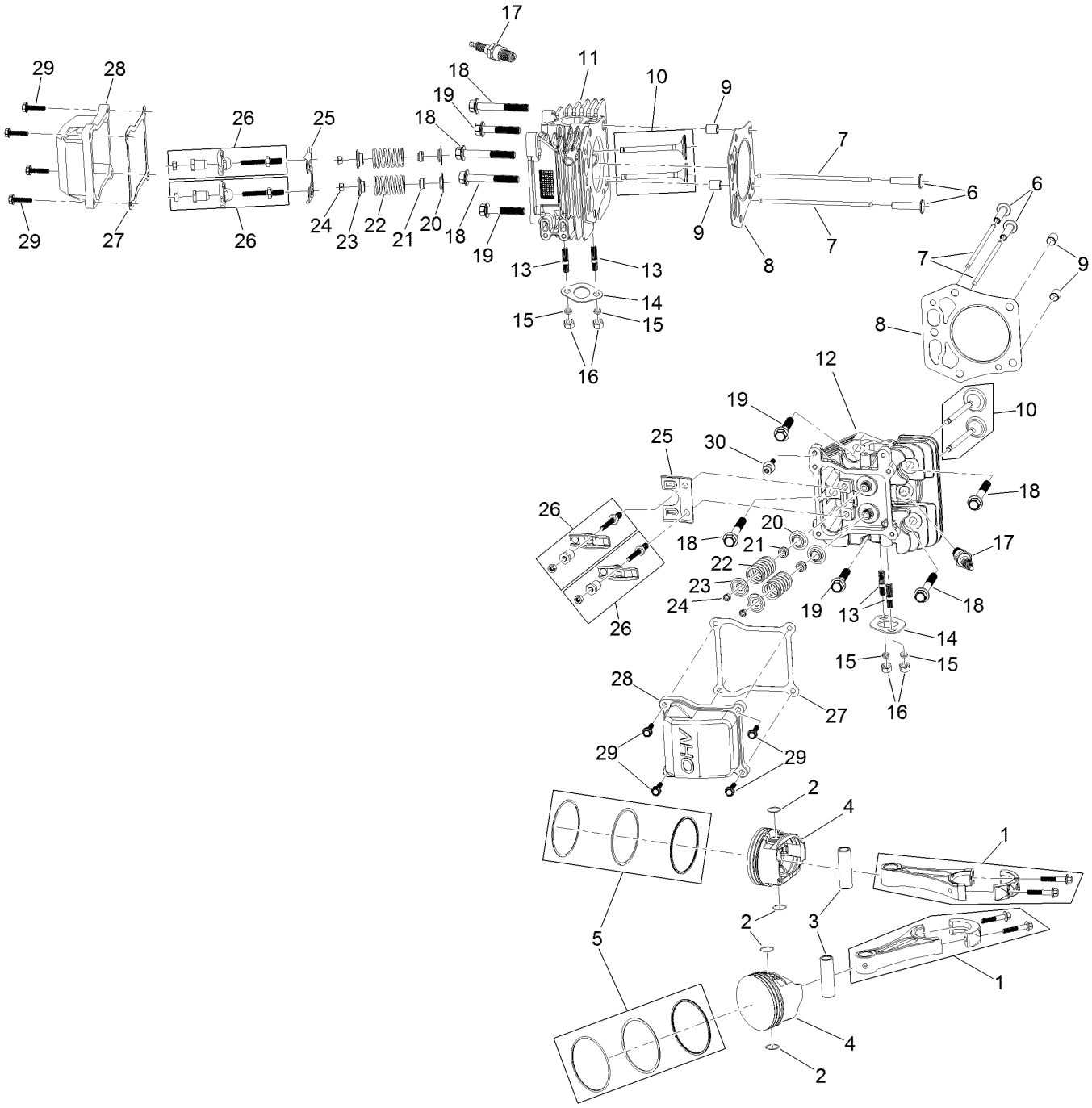

Piston and Cylinder Head Assembly (continued)

Ref.	Part Number	Qty.	Description
1	127-9256	2	Connecting Rod ASM
2	127-9258	4	Clip-Pin, Piston
3	127-9257	2	Pin-Piston
4	127-9259	2	Piston
5	127-9260	2	Piston Ring Set
6	127-9224	4	Lifter-Valve
7	127-9225	4	Rod-Push
8	127-9226	2	Gasket-Head, Cylinder
9	127-9227	4	Pin-Dowel
10	127-9228	2	Valve Set
11	127-9229	1	Head-Cylinder
12	127-9254	1	Head-Cylinder
13	127-9236	4	Stud
14	120-4317	2	Gasket-Exhaust
15	127-9279	4	Washer-Lock, Split
16	121-0199	4	Nut-HH
17	81-3250	2	Spark Plug
18	127-9231	6	Screw-HWH
19	127-9232	4	Screw-HWH
20	120-4303	4	Seat-Spring, Valve
21	120-4304	4	Seal-Stem, Valve
22	120-4305	4	Spring-Valve
23	120-4306	4	Retainer-Spring, Valve
24	120-4307	4	Keeper-Valve
25	127-9233	2	Plate-Guide, Push Rod
26	127-9294	4	Rocker Arm ASM
27	127-9295	2	Gasket-Valve Cover
28	127-9050	2	Cover-Valve
29	120-4225	8	Screw-HHF
30	120-4214	1	Screw-Shoulder, HH

Blower Housing Assembly

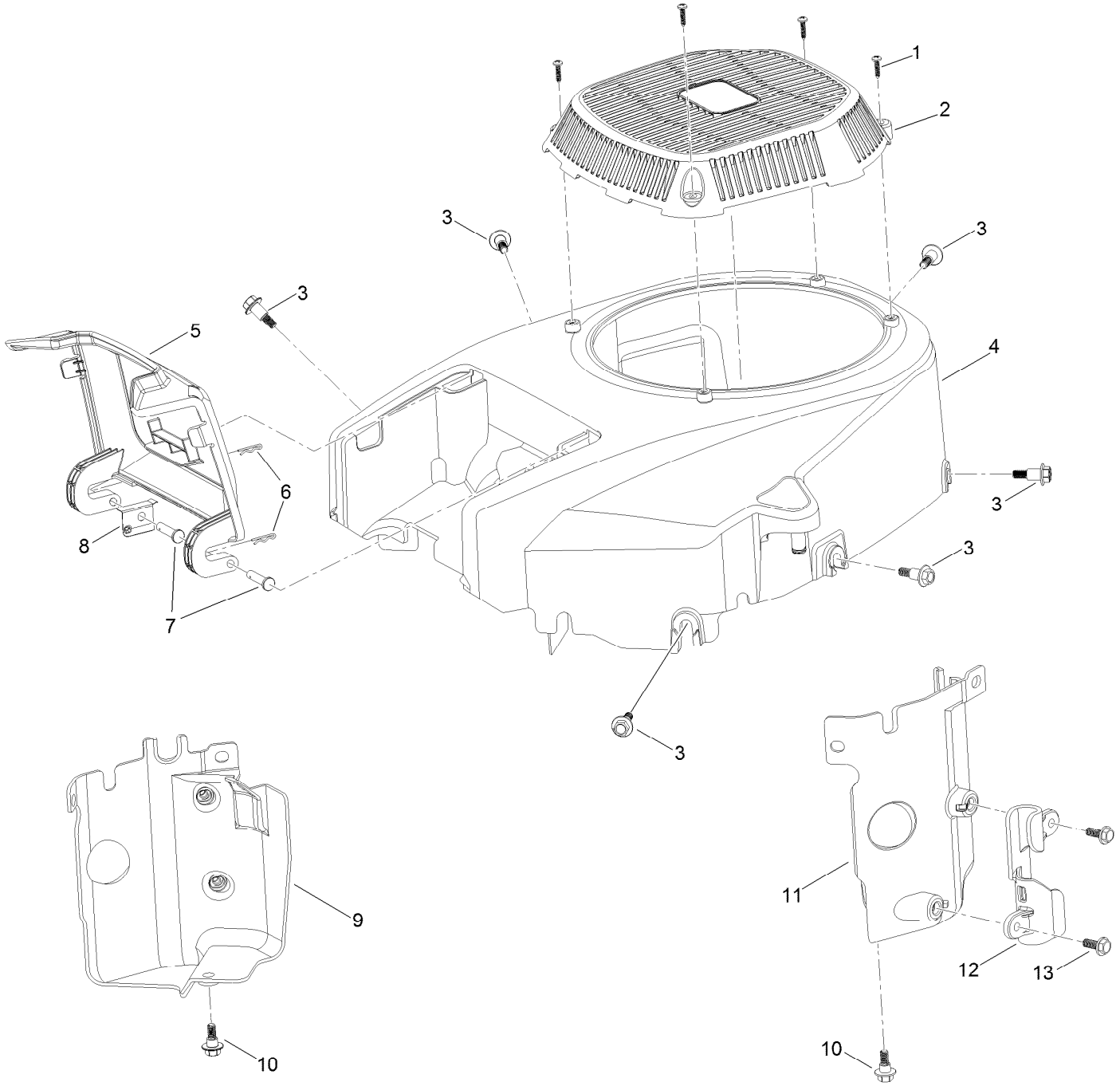

Blower Housing Assembly (continued)

Ref.	Part Number	Qty.	Description
1	133-1571	4	Screw-PPH, Plastic
2	127-9045	1	Cover-Fan
3	127-9196	6	Screw-Shoulder, HWH
4	133-1572	1	Shroud-Engine
5	127-9046	1	Door-Filter, Air
6	127-9280	2	Pin-Hair
7	127-9282	2	Pin
8	127-9281	1	Plate-Spring
9	127-9049	1	Baffle-Air, Left
10	120-4210	2	Screw-Shoulder, HHF
11	127-9048	1	Baffle-Air, Right
12	127-9287	1	Cleat-Hose
13	120-4232	2	Screw-HHF

Gasket and Seal Kit Assembly

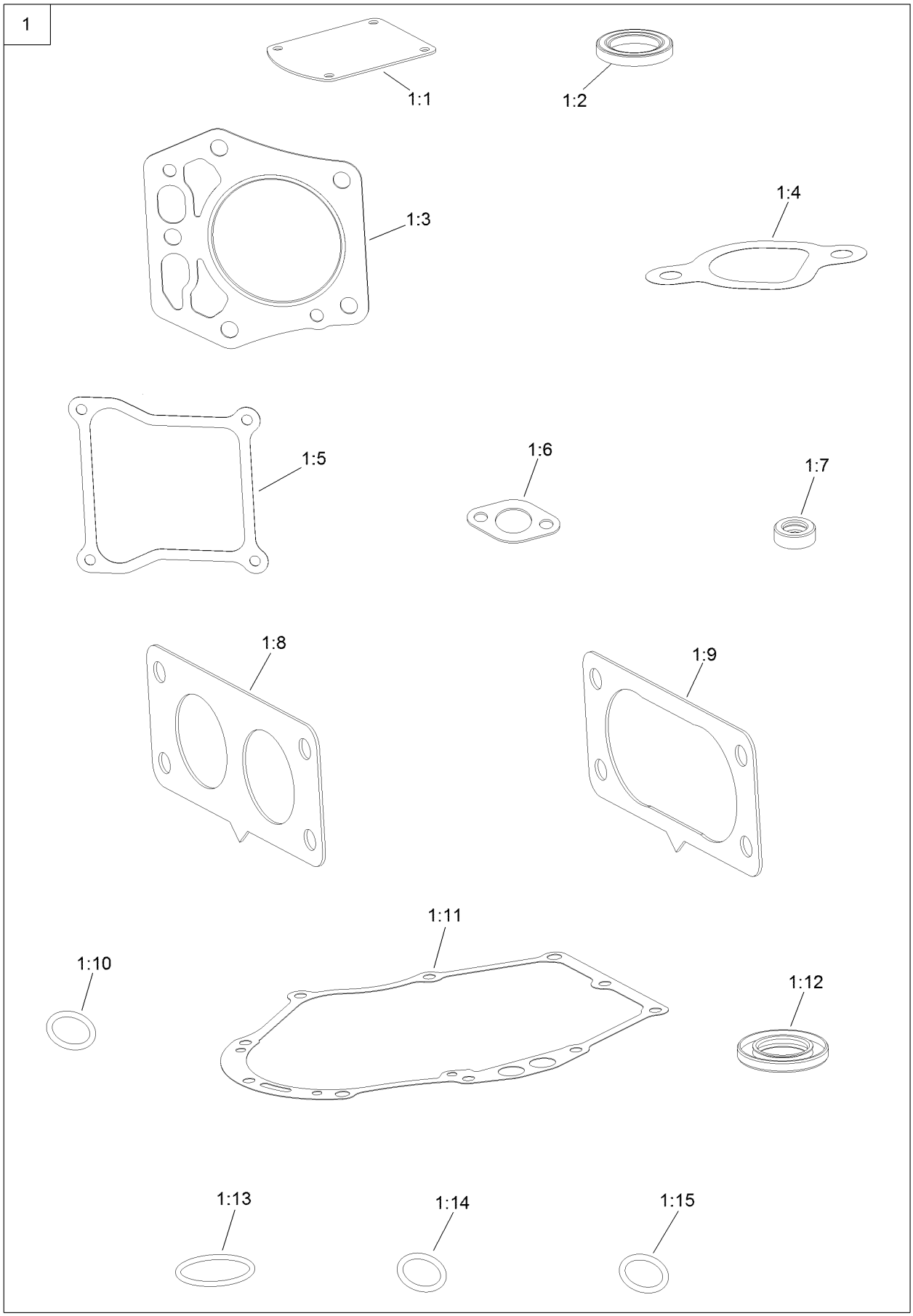

Gasket and Seal Kit Assembly (continued)

Ref.	Part Number	Qty.	Description
1	127-9296	1	Gasket And Seal Kit
1:1	127-9214	1	Gasket-Breather
1:2	120-4267	1	Seal-Oil
1:3	127-9226	2	Gasket-Head, Cylinder
1:4	127-9230	2	Gasket-Intake
1:5	127-9295	2	Gasket-Valve Cover
1:6	120-4317	2	Gasket-Exhaust
1:7	120-4257	1	Seal-Oil
1:8	127-9246	2	Gasket-Carburetor
1:9	127-9251	1	Gasket-Carburetor
1:10	120-4262	2	O-Ring
1:11	127-9267	1	Gasket-Cover, Crankcase
1:12	127-9271	1	Seal
1:13	127-9273	1	O-Ring
1:14	127-9284	1	O-Ring
1:15	127-9286	1	O-Ring

Body Styling and Fuel Pod Assembly

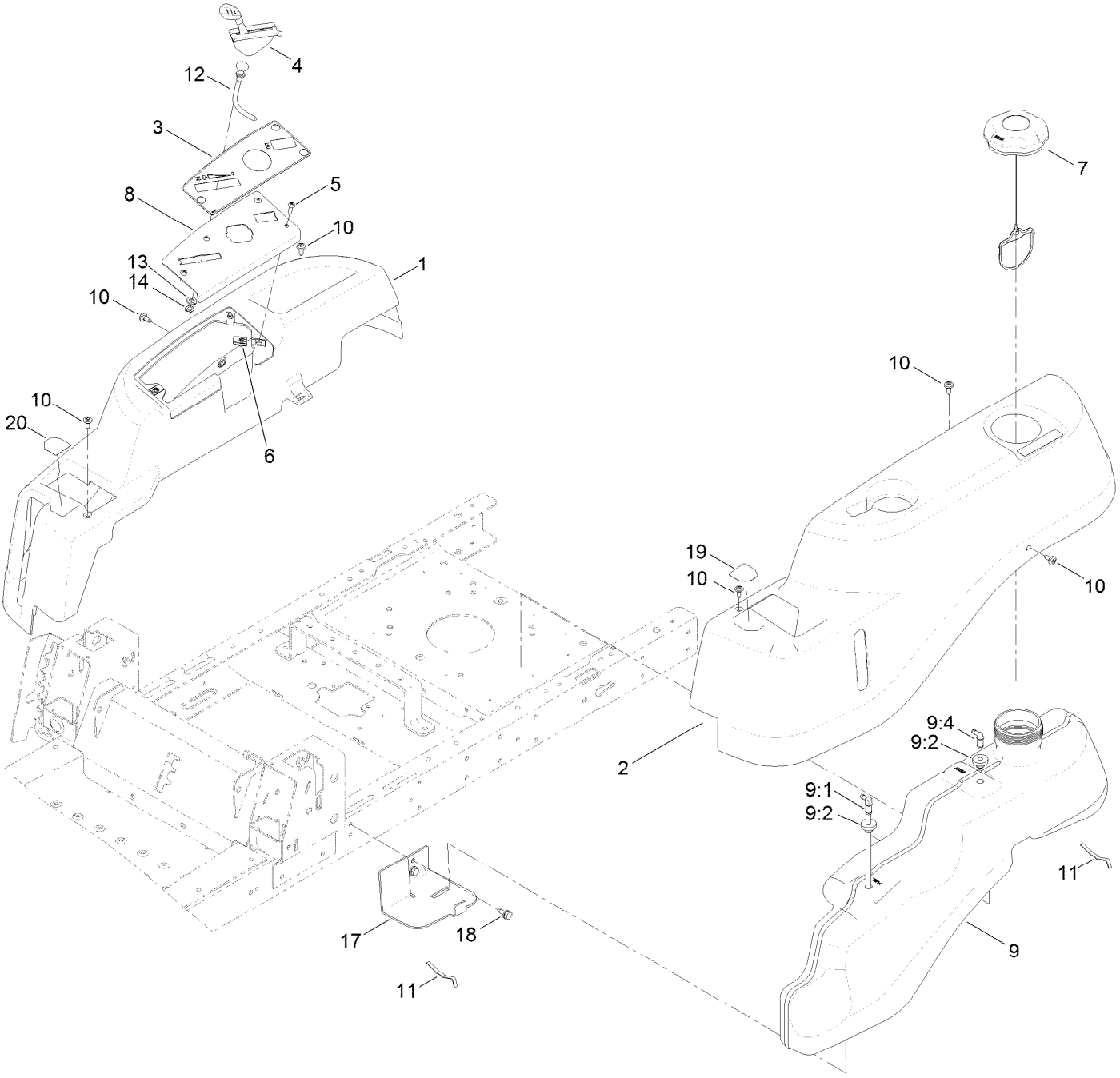

Body Styling and Fuel Pod Assembly (continued)

Ref.	Part Number	Qty.	Description
1	119-3338	1	Pod-RH
2	119-3337	1	Pod-LH
3	121-0773	1	Decal-Panel, Control
4	121-0769	1	Cable-Throttle
5	3258-166	3	Screw-PRH
6	107069	3	Clip
7	120-5461	1	Cap-Fuel, Ratcheting
8	119-3377-03	1	Plate-Control
9	119-3324	1	Fuel Tank ASM
9:1	121-0793	1	Connector-Elbow, 90 DEG
9:2	46-6560	2	Bushing
9:4	117-7400	1	Fitting-Plastic
10	120-7950	6	Screw-Shoulder
11	609830	2	Spring
12	112-9753	1	Cable-Choke
13	3253-21	1	Washer-Lock
14	3220-3	1	Nut-HJ
17	119-3395-03	1	Support-Tank, Front
18	32144-70	2	Screw-HWHTF
19	119-8814	1	Decal-Lever, Control (LH)
20	119-8815	1	Decal-Lever, Control (RH)

Fuel Delivery Assembly

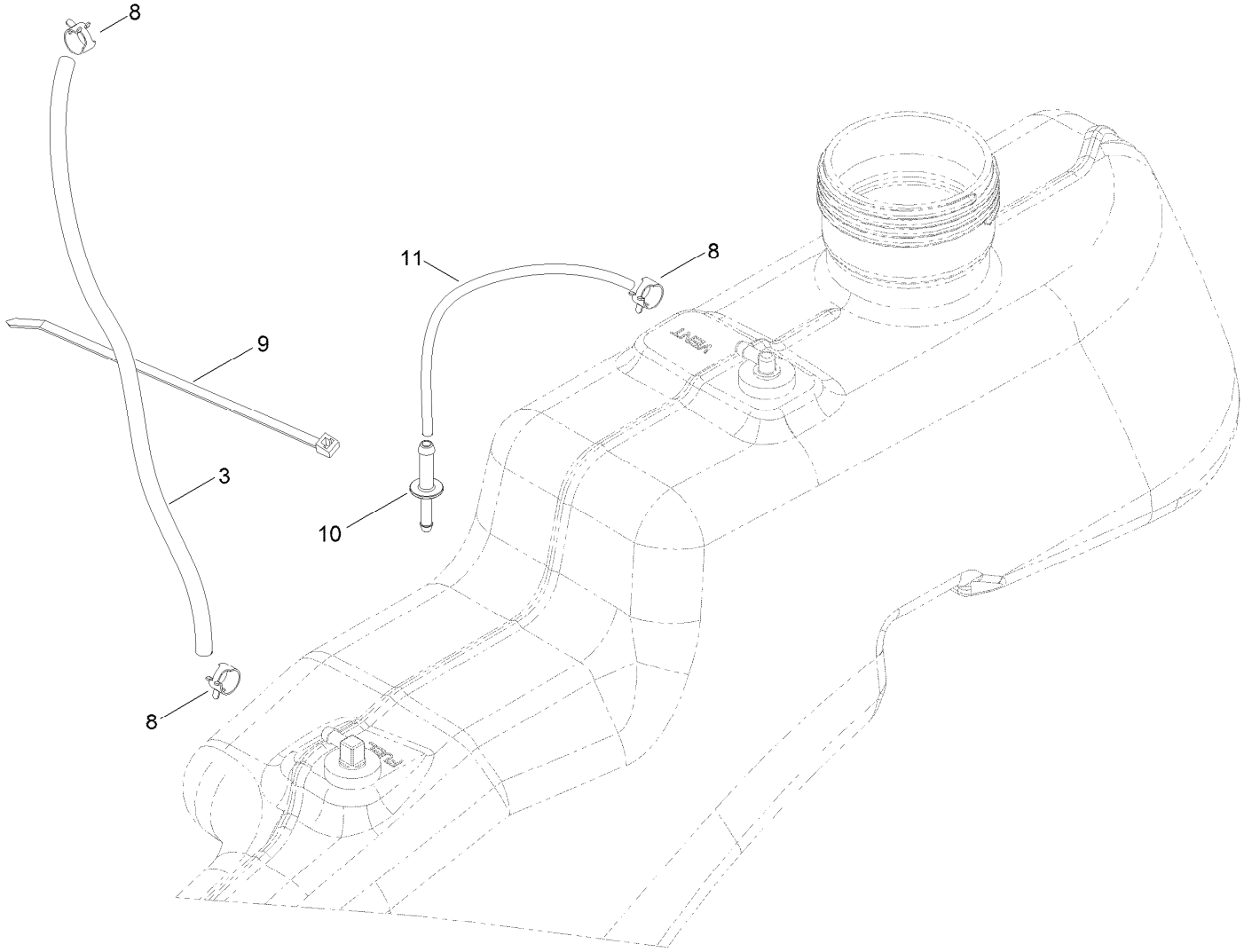

Fuel Delivery Assembly (continued)

Ref.	Part Number	Qty.	Description
3	109-0281	1	Hose-Fuel
8	2412-98	3	Clamp-Hose
9	614249	1	Tie-Cable
10	117-5399	1	Adaptor-Orifice
11	110-1876	1	Hose-Fuel

Battery and Electrical Assembly

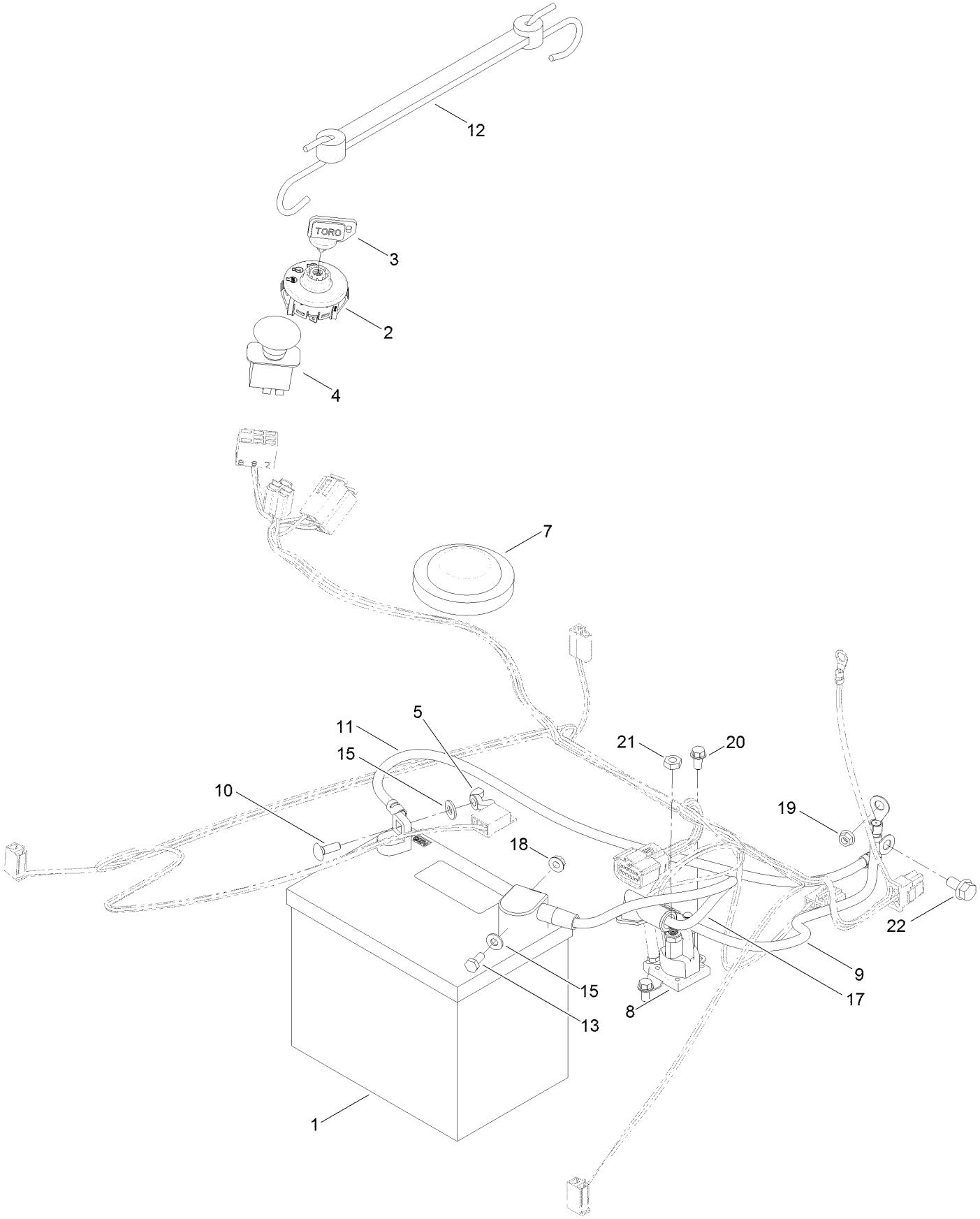

Battery and Electrical Assembly (continued)

Ref.	Part Number	Qty.	Description
1	105-1692	1	Battery
2	117-2221	1	Switch-Ignition
3	63-8360	1	Key-Ignition
4	103-5221	1	Switch-PTO
5	32103-22	1	Nut-Wing
7	100-3524	1	Switch-Seat
8	117-1197	1	Solenoid
9	121-0711	1	Cable-Battery, Positive
10	3229-1	1	Bolt-CARR
11	119-8899	1	Cable-Battery, Black
12	104-2466	1	Holddown-Battery
13	321-3	1	Screw-HH
15	3256-22	2	Washer-Flat
17	119-8897	1	Cable-Battery, Red
18	32128-33	1	Nut-HF
19	33003-00	1	Nut-HF
20	32144-4	2	Screw-HWH
21	3220-2	2	Nut-Jam
22	3234-14	1	Screw-HHF

Fuse and Wire Harness Assembly

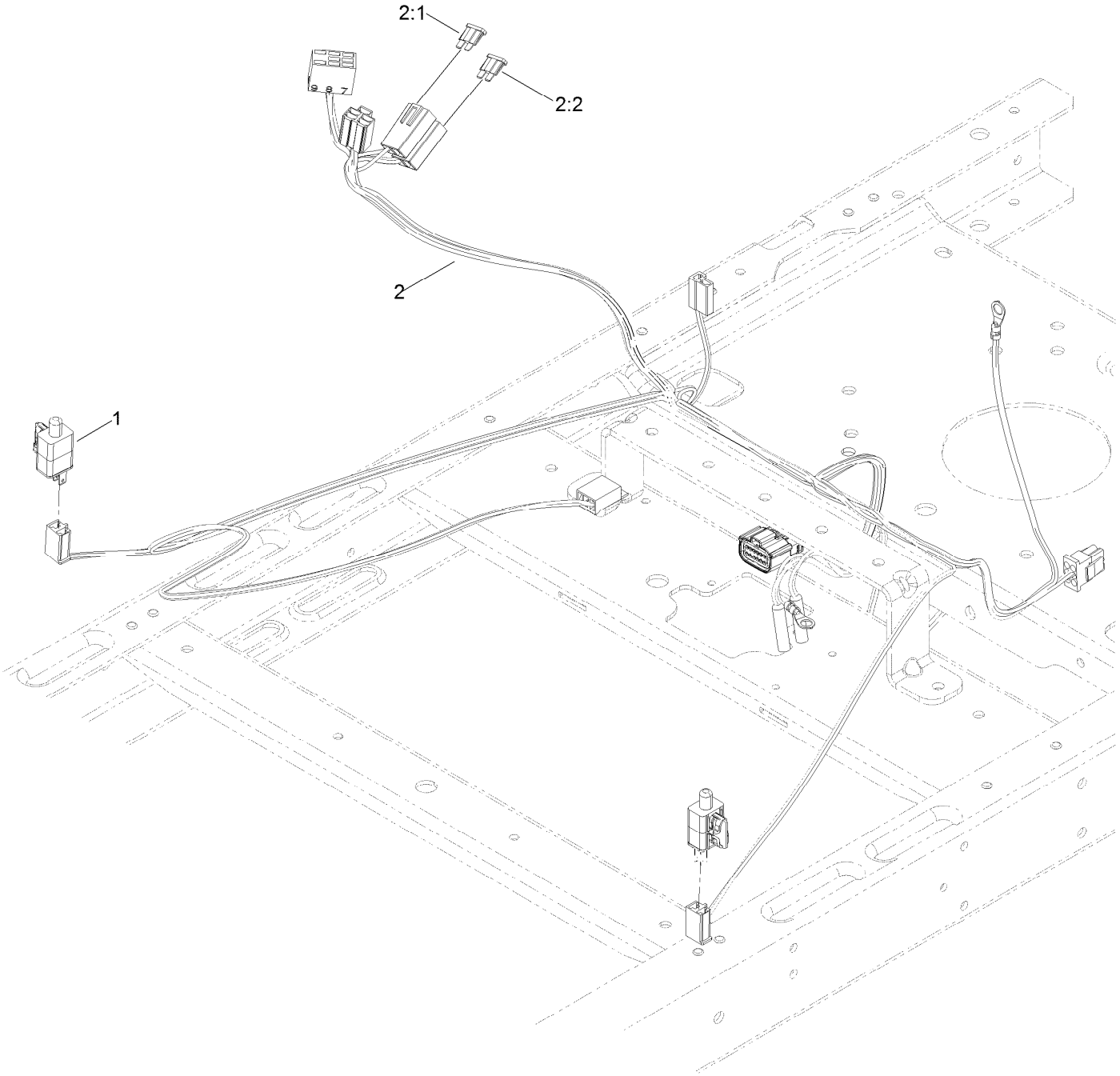

Fuse and Wire Harness Assembly (continued)

Ref.	Part Number	Qty.	Description
1	110-6765	2	Switch
2	132-0924	1	Harness-Wire ●

Ref.	Part Number	Qty.	Description
2:1	109103	1	Fuse-Blade, 30 Amp
2:2	109102	1	Fuse-Blade, 25 Amp

● Use dielectric grease on all unsealed connectors and terminals only. Do not apply in sealed connectors.

50 Inch Deck Assembly

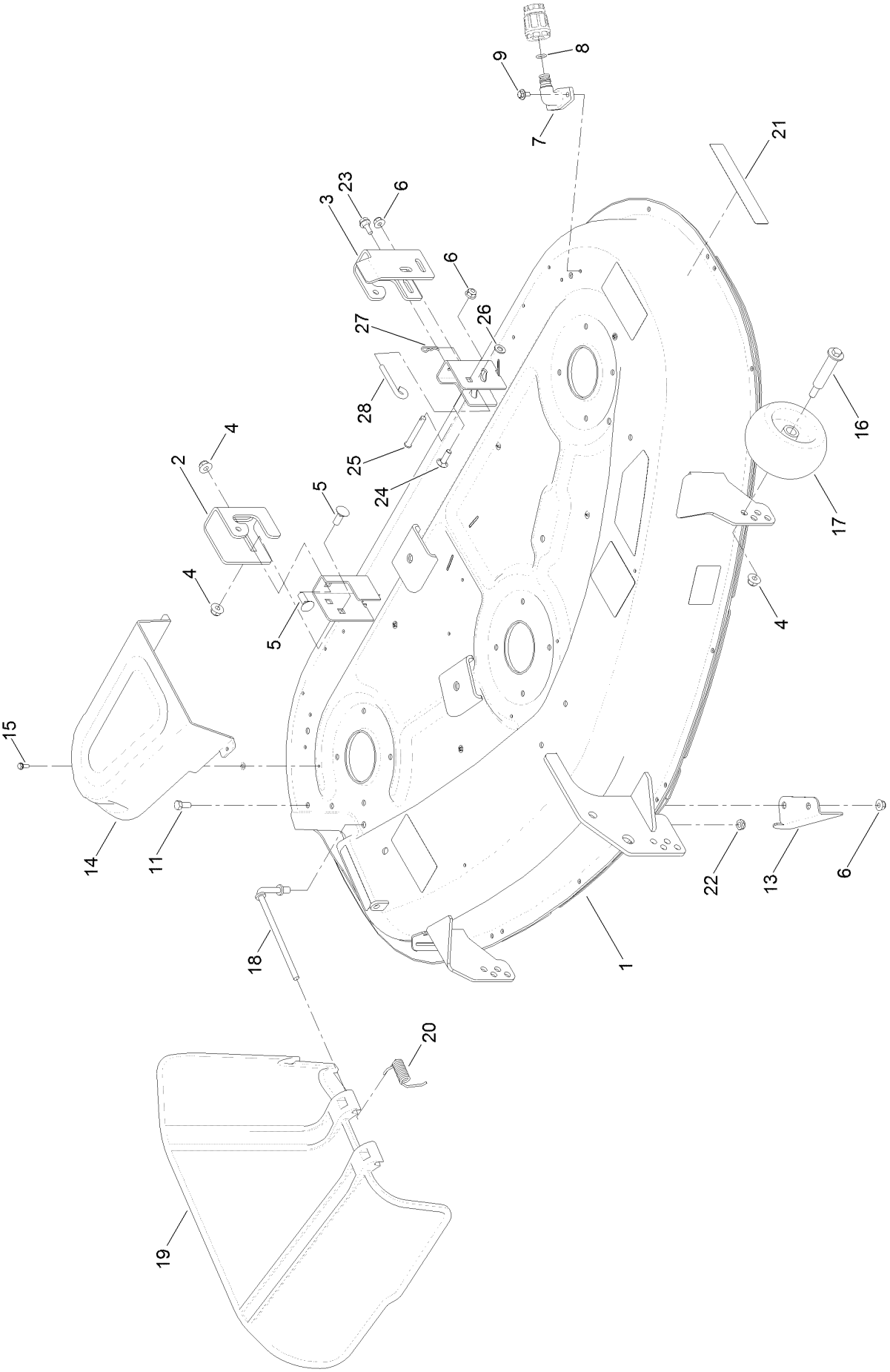

50 Inch Deck Assembly (continued)

Ref.	Part Number	Qty.	Description
1	131-3606	1	50 Inch Deck And Decal ASM
2	131-4138	1	Bracket-Hanger, RH
3	131-1091	1	Bracket-Hanger, LH
4	104-8301	5	Nut-HF, NI
5	3231-2	2	Bolt-CARR
6	104-8300	4	Nut-HF, NI
7	95-2747	2	Fitting-Washout
8	46-6290	2	O-Ring
9	46-8560	4	Screw-HHFTF
11	322-3	2	Screw-HH
13	112-3983-03	1	Baffle-Cutoff
14	108-7890	2	Cover-Belt
15	32144-1	6	Screw-Taptite
16	112-3977	3	Bolt-Shoulder
17	1-603299	3	Roller-Scalp, Anti
18	112-3950	1	Rod-Pivot
19	108-7895	1	Deflector
20	110-6694	1	Spring-Torsion
21	119-2368	1	Decal-Recycler
22	3296-59	1	Nut-Lock, NI
23	120-7024	1	Screw-Shoulder, HHF
24	3230-22	1	Screw-CARR
25	110-0618	1	Pin-Clevis
26	3256-23	1	Washer-Plain
27	1-806003	1	Pin-Cotter
28	131-0955	1	Rod-Level, Deck

50 Inch Deck Decal Assembly No. 131-3606

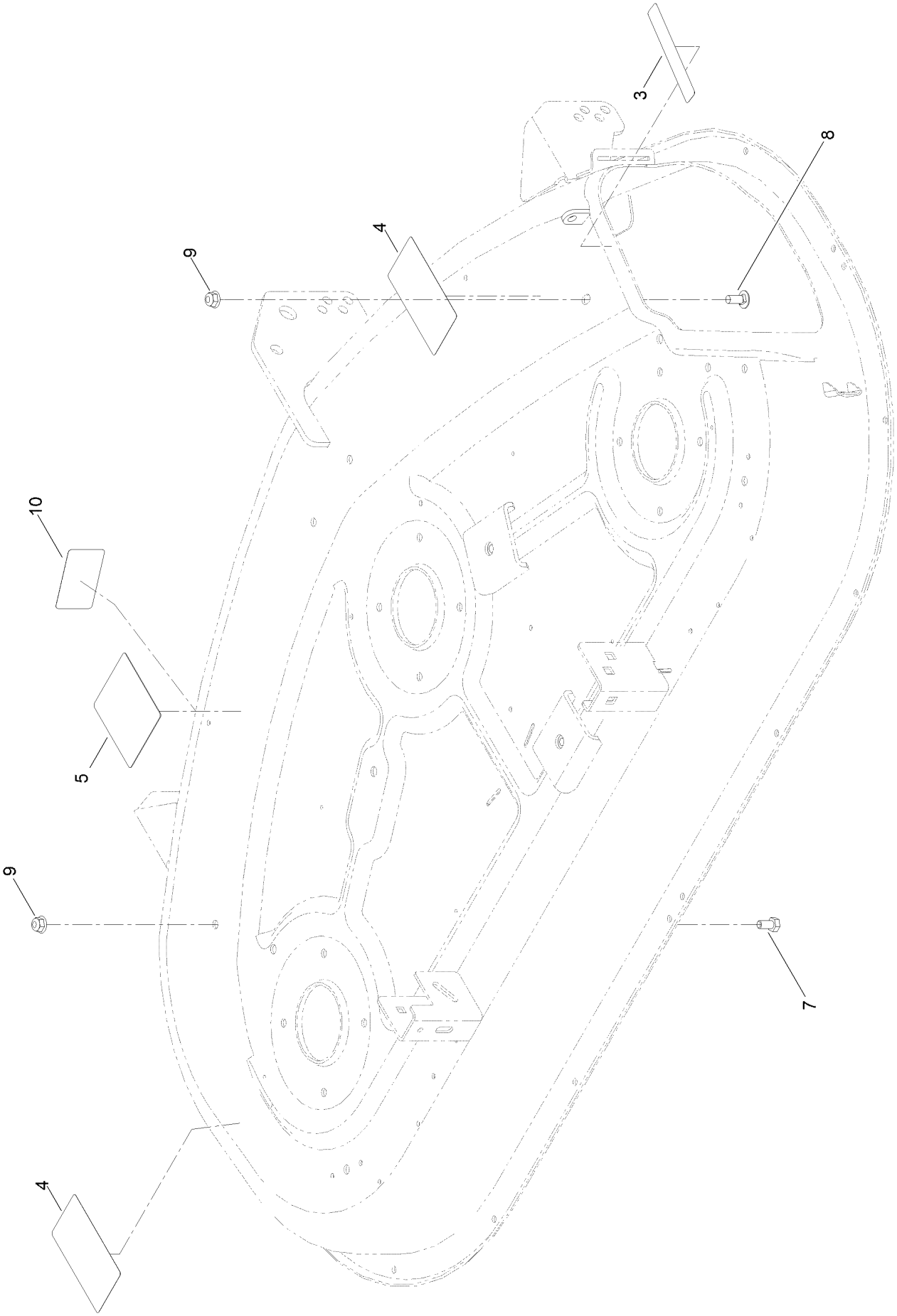

50 Inch Deck Decal Assembly No. 131-3606 (continued)

Ref.	Part Number	Qty.	Description
3	93-7009	1	Decal-Danger
4	132-0872	2	Decal-Danger, Deck
5	99-3943	1	Decal-Routing, Belt
7	322-2	1	Screw-HH
8	3230-23	1	Screw-CARR
9	104-8300	2	Nut-HF, NI
10	112-9840	1	Decal-Scalp, Anti

50 Inch Deck and Baffle Assembly

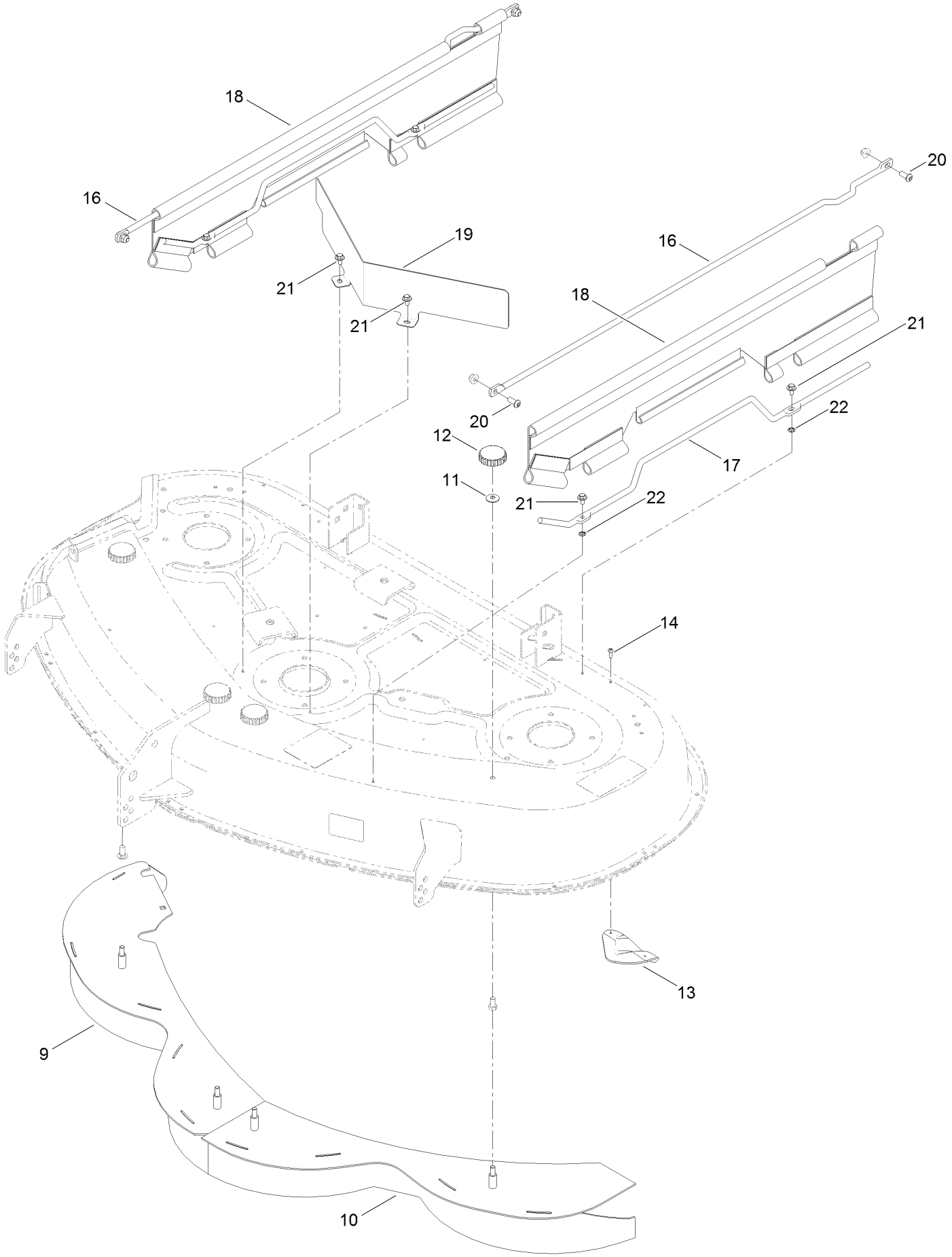

50 Inch Deck and Baffle Assembly (continued)

Ref.	Part Number	Qty.	Description
9	112-4010-03	1	RH Baffle ASM
10	112-4011-03	1	LH Baffle ASM
11	3290-456	4	Washer-Belleville
12	94-5583	4	Knob
13	76-2160	3	Plate-Kicker
14	32144-111	6	Screw-PPH
16	131-3669	2	Rod-Support, Upper

Ref.	Part Number	Qty.	Description
17	131-3684	2	Rod Support, Lower
18	131-3926	2	Guard-Side
19	131-3648-03	1	Shield-Front
20	3274-55	4	Screw-HSBH
21	46-8560	6	Screw-HHFTF
22	1-803037	4	Nut-Retaining

50 Inch Deck Belt, Spindle and Blade Assembly

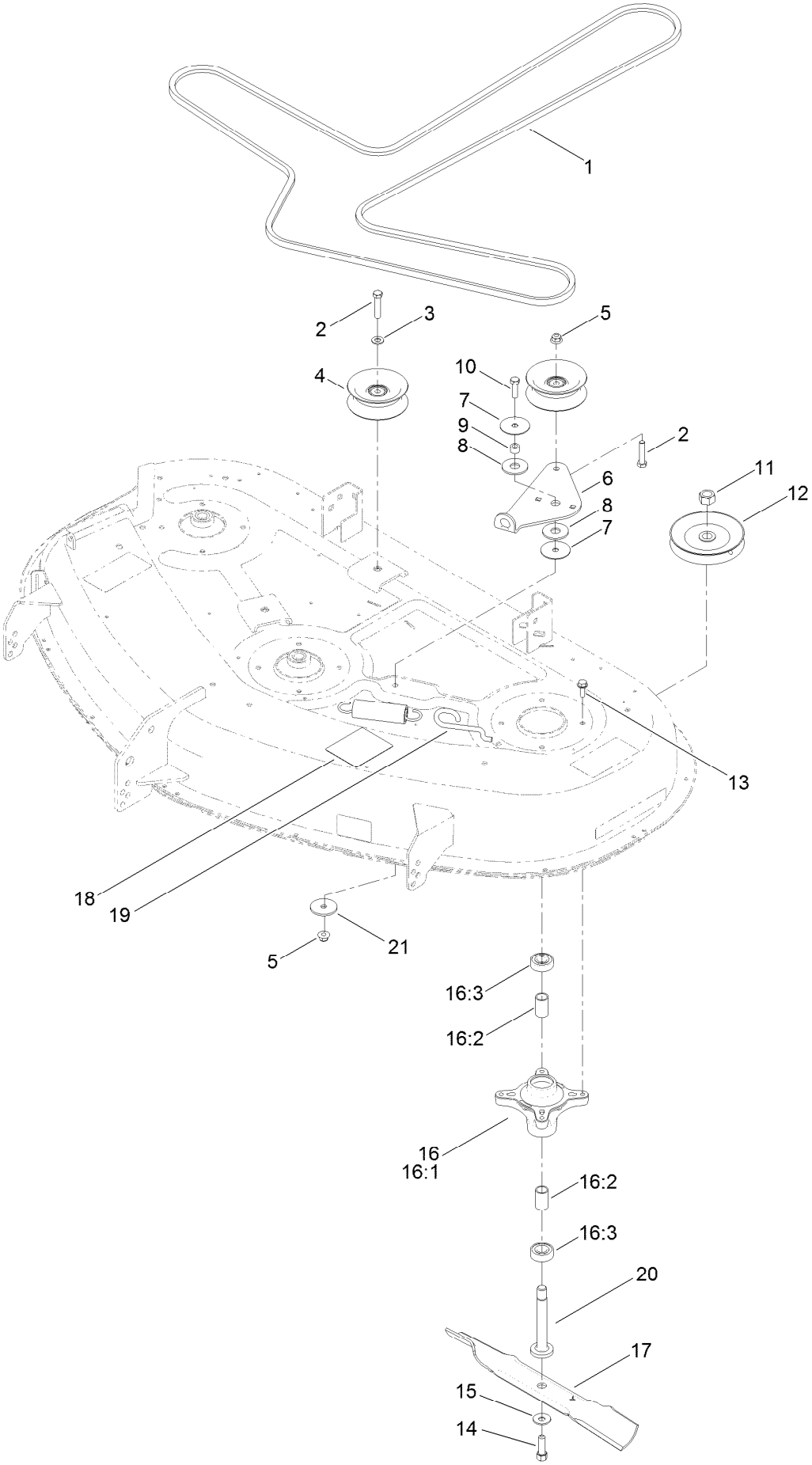

50 Inch Deck Belt, Spindle and Blade Assembly (continued)

Ref.	Part Number	Qty.	Description
1	119-8820	1	V-Belt
2	323-9	3	Screw-HH
3	3256-24	2	Washer-Flat
4	106-2175	3	Pulley-Idler, Flat
5	104-8301	2	Nut-HF, NI
6	114-8540	1	Arm-Idler
7	120-2229	2	Washer
8	114-0463	2	Washer-Friction, Composite
9	115-4986	1	Spacer
10	323-7	1	Screw-HH
11	3219-6	3	Nut-Hex
12	125-5575	3	Pulley

Ref.	Part Number	Qty.	Description
13	32144-41	12	Screw-Taptite
14	26-0671	3	Screw-HH
15	3290-465	3	Washer-Belleville
16	121-0751	3	Spindle ASM
16:1	117-7267	1	Spindle
16:2	120-7935	2	Spacer
16:3	38-7820	2	Bearing-Ball
17	115-5062-03	3	Blade-Mulch, 17.50 Inch
18	1-603414	1	Spring-Extension
19	112-3973	1	Hook-Return, Spring
20	117-7268	3	Shaft-Spindle
21	63-7400	1	Washer-Rebound

Attachments and Accessories

For 74661 TimeCutter ZS 5000 Riding Mower

Product Name	Model/Part
Deck Ring Kit	114-1608
Hourmeter Kit	116-5461
All Season Synthetic Oil	117-0066
Fuel Stabilizer (4oz)	117-0089
Fuel Stabilizer (16oz)	117-0090
Seat Cover w/Arm Rest	117-0097
Striping Kit	120-7905
Jack Mount Kit	126-5251
Jack Kit	127-6666
Attachment Mount Kit	131-3966
Weight Kit	131-7658
Deluxe Seat Kit	131-7699
Deck Retention Kit	132-0913
Floor Mat Kit	132-6921
HD Air Cleaner Kit	136-7860
10w30 4-cycle Engine Oil (32oz Bottle)	38280
Toro 4-cycle SAE 30 Oil (32oz Bottle)	38903
Storage Cover	490-7516
Foot Assist Deck Lift Kit, 2011 and After Zero-Turn-Radius Riding Mower	79010
Sunshade Kit	79011
Blade Kit	79016P
Cargo Carrier	79040
Assist Handle and Step Kit	79339
50in and 54in Bagger	79392

Notes:

Notes:

Notes:

TORO®

Count on it.