Form No. 3398-920 Rev B

TORO®

Count on it.

Parts Catalog

TimeCutter® SW 4200

Riding Mower

Model No. 74784—Serial No. 316000001 and Up

Register at www.Toro.com.
Original Instructions (EN)

3398-920 B

Ordering Replacement Parts

To order replacement parts, please supply the part number, the quantity, and the description of each part desired.

Understanding Reference Numbers

Each identified part in an illustration has a reference number. The reference number for a part also appears in the parts list, along with other information about the part.

This catalog uses two special reference number formats, one to indicate parts in a service assembly and another to indicate the quantity of a given part in an illustration.

Service Assembly Reference Numbers

Parts in service assemblies have reference numbers in the form a:b. The a represents the reference number of the entire service assembly and the b represents a sequential number unique to each part within the service assembly.

For example, a wheel assembly might be identified by reference number 6, the tire by 6:1, the valve by 6:2, and the wheel by 6:3. When you order the assembly identified by reference number 6, you receive all parts identified by reference numbers 6:1,6:2, and 6:3. However, you may also order any part individually. Reference numbers of this type appear in illustration and in parts lists.

Reference Numbers Indicating Quantity

In an illustration, if a reference number indicates more than one part, the reference number has the form nX y. The n represents the quantity of the part, the X is the multiplication symbol, and the y represents the reference number.

For example, in an illustration, the reference number 2X 37 means that two of the parts identified by reference number 37 are indicated.

Contents

Frame, Front Axle and Caster Wheel Assembly 4
Deck Lift Assembly 6
Steering Column Assembly 8
Speed Control Assembly 10
Neutral Return Assembly 12
Steering Gear Assembly 14
Steering Cable Assembly 16
Steering Assembly 18
Motion Control Assembly 20
Brake Box Assembly 22
Seat Assembly 24
Belt and Idler Assembly 26
Hydro Transaxle Drive and Rear Wheel Assembly 28
2 Ply Wheel and Tire Assembly No. 131-3671 30
Right Hand Hydro Transaxle Assembly No. 119-3331 32
Left Hand Hydro Transaxle Assembly No. 119-3330 34
Clutch Assembly 36
Engine and Muffler Assembly 38
Fuel System Assembly with Non-Canister Style Air Filter 40
Carburetor Assembly No. 127-9289 with Non-Canister Style Air Filter 42
Air Intake and Filtration Assembly with Non-Canister Style Air Filter 44
Ignition and Electrical Assembly 46
Crankcase and Crankshaft Assembly 48
Governor Control Assembly 50
Piston and Cylinder Head Assembly 52
Blower Housing Assembly 54
Gasket and Seal Kit Assembly 56
Body Styling and Fuel Tank Assembly 58
Fuel Delivery Assembly 60
Battery and Electrical Assembly 62
Wire Harness Assembly 64
42 Inch Deck Assembly 66
42 Inch Deck Decal Assembly No. 131-3604 68
42 Inch Deck, Belt and Blade Assembly 70
Attachments and Accessories 72

© 2018—The Toro® Company
8111 Lyndale Avenue South
Bloomington, MN 55420

Contact us at www.Toro.com.
Printed in the USA.
All Rights Reserved

Frame, Front Axle and Caster Wheel Assembly

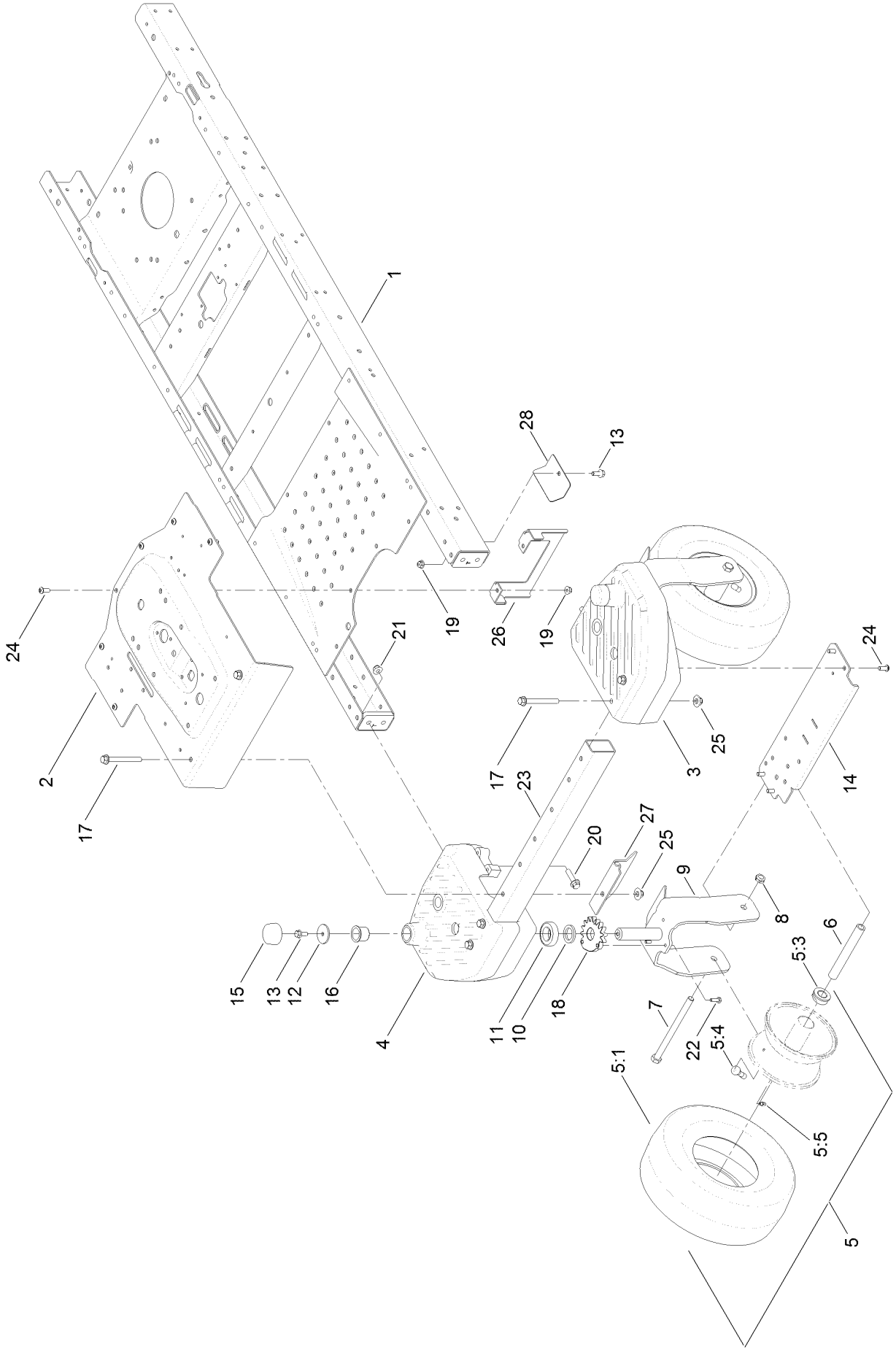

Frame, Front Axle and Caster Wheel Assembly (continued)

Ref.	Part Number	Qty.	Description
1	130-0804-01	1	Frame ASM
2	132-9345-05	1	Pan-Steer, Front
3	130-0748-05	1	Housing-Spindle, LH
4	130-0746-05	1	Housing-Spindle, RH
5	119-3473	2	13 Inch Wheel And Tire ASM
5:1	119-3471	1	Tire-13 Inch
5:3	114-1640	2	Bushing-Flange
5:4	232-27	1	Stem-Valve
5:5	302-5	1	Fitting-Grease
5:99	232-46	1	Tube-Inner ●
6	119-3475	2	Spanner
7	325-37	2	Screw-HH
8	3296-45	2	Nut-Lock, NI
9	130-0670-03	2	Caster Fork ASM
10	117-7394	2	Washer-Thrust
11	109-3678	2	Bearing-Ball
12	131-1032	2	Washer-Flat
13	3234-47	3	Screw-HHF
14	130-6983-03	1	Plate-Bridge, Narrow
15	130-7015	2	Cap-Caster
16	126-1963	2	Bushing-Pivot
17	115-7660	6	Screw-HHF
18	130-0689	2	Gear-Wheel, 15 Tooth
19	104-8300	7	Nut-HF, NI
20	114-4681	4	Screw-HHF
21	104-8301	4	Nut-HF, NI
22	321-4	4	Screw-HH
23	130-6902-03	1	Tube-Front, Narrow
24	3274-55	10	Screw-HSBH
25	109-6658	6	Nut-Flange, NI
26	132-0941-03	1	Bracket-Upstop
27	132-0868-03	1	Guard-Front
28	132-0901-03	1	Plate-Guard

● Not illustrated

Deck Lift Assembly

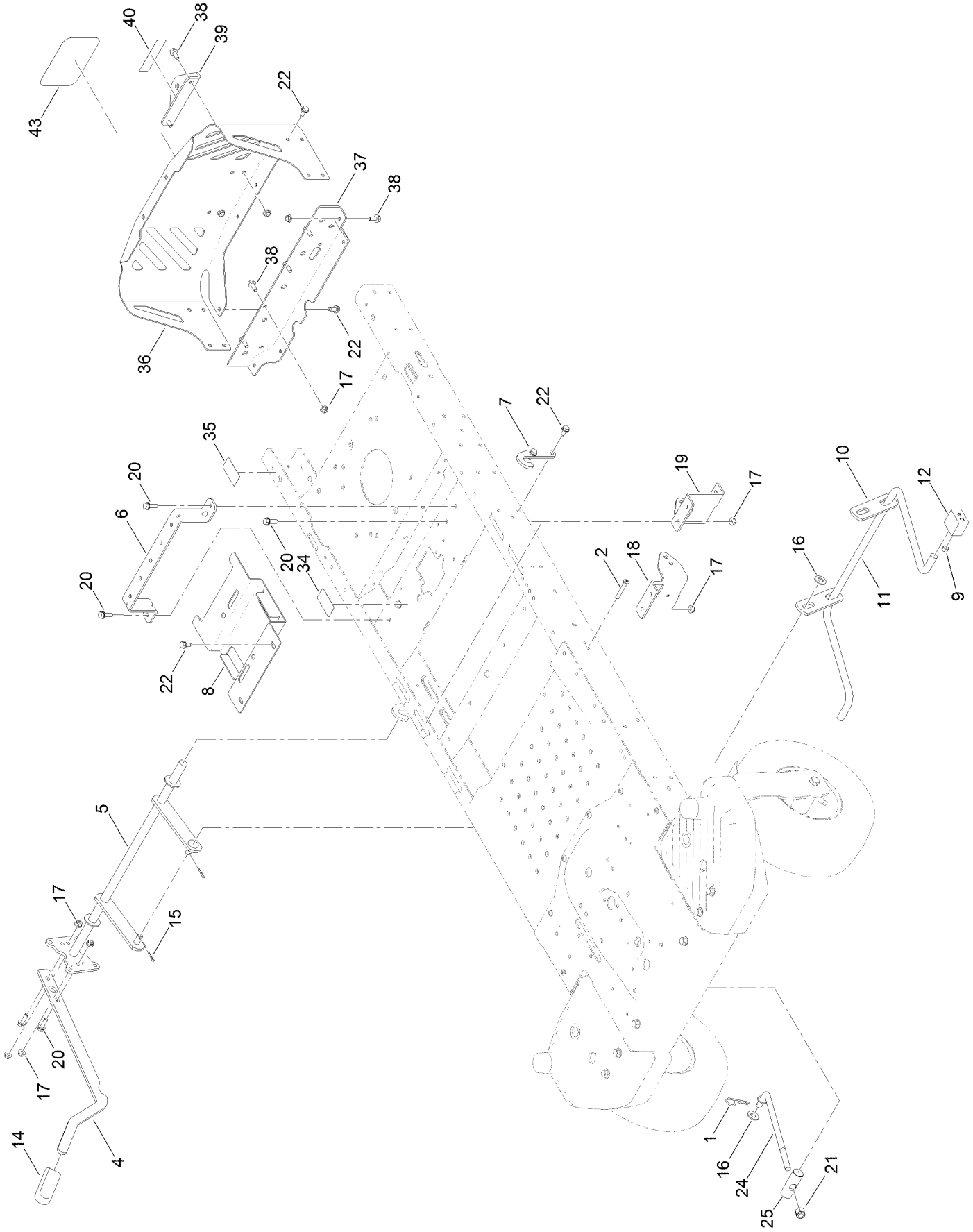

Deck Lift Assembly (continued)

Ref.	Part Number	Qty.	Description
1	1-806005	1	Pin-Cotter
2	120-5499	2	Screw-HSBH
4	119-3427-03	1	Lever-Lift
5	132-6872-03	1	Lift-Deck, Narrow
6	119-3435-03	1	Brace-Seat, Rear (Narrow)
7	119-8875	2	Bracket-Lift
8	131-0914-03	1	Bracket-Battery
9	3296-29	2	Nut-Lock, NI
10	108-7840	2	Link-Lift
11	108-7839	1	Arm-Lift, Rear
12	108-7845	2	Block-Pivot
14	1-633268	1	Grip-Lever
15	3272-11	2	Pin-Cotter
16	3256-26	3	Washer-Flat
17	104-8300	14	Nut-HF, NI
18	131-0901-01	1	Mount-Hydro, Front (RH)
19	131-0902-01	1	Mount-Hydro, Front (LH)
20	3234-29	6	Screw-HHF
21	3296-19	1	Nut-Hex
22	32144-70	16	Screw-HWHTF
24	131-3945	1	Rod-Mount, Deck
25	119-8810	1	Pin-Pivot
34	121-5684	1	Decal-Location, Service Dealer
35	121-2989	2	Decal-Bypass
36	127-3353-03	1	Guard-Engine, Narrow
37	130-6950-01	1	Crossmember-Rear, Narrow
38	3234-47	8	Screw-HHF
39	117-1232-03	1	Bracket-Hitch
40	131-4036	1	Decal
43	99-4693	1	Decal

Steering Column Assembly

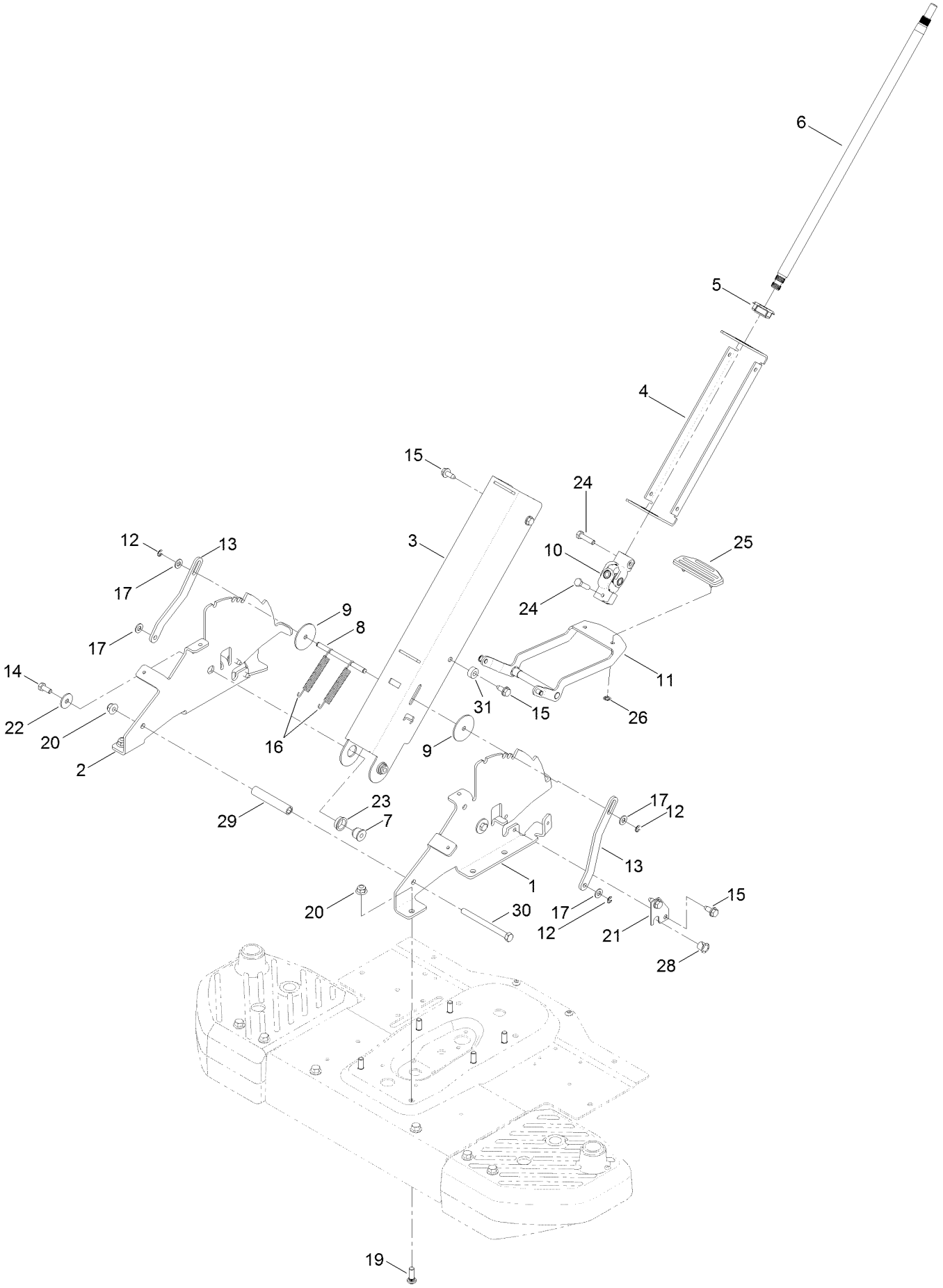

Steering Column Assembly (continued)

Ref.	Part Number	Qty.	Description
1	131-1052-03	1	Bracket-Pivot, Column (LH)
2	131-1053-03	1	Bracket-Pivot, Column (RH)
3	131-1054-01	1	Column-Front
4	132-9315-01	1	Column-Back
5	133-1160	1	Bearing-Spherical
6	125-5507	1	Shaft-Steering, Upper
7	131-1056	2	Spacer-Pivot, Column
8	131-1050	1	Rod-Plunger
9	131-8729	2	Washer-Shaft, Tilt
10	131-1030	1	U-Joint ASM
11	132-6868	1	Release Pedal ASM
12	701197	4	E-Ring
13	131-1049	2	Plate-Plunger
14	322-3	2	Screw-HH
15	32144-70	8	Screw-HWHTF
16	130-6998	2	Spring-Extension
17	3256-23	4	Washer-Plain
19	132-0921	6	Stud-Push-In
20	104-8301	7	Nut-HF, NI
21	131-1043	2	Plate-Retainer
22	5-4460	2	Washer-Pivot
23	99-4243	2	Bushing-Flange
24	322-6	2	Screw-HH
25	131-4096	1	Pad-Tilt Pedal
26	32112-6	2	Nut-Push
28	256-257	2	Bushing-Nyliner
29	131-3697	1	Spacer
30	323-23	1	Screw-HH
31	121-1759	2	Spacer

Speed Control Assembly

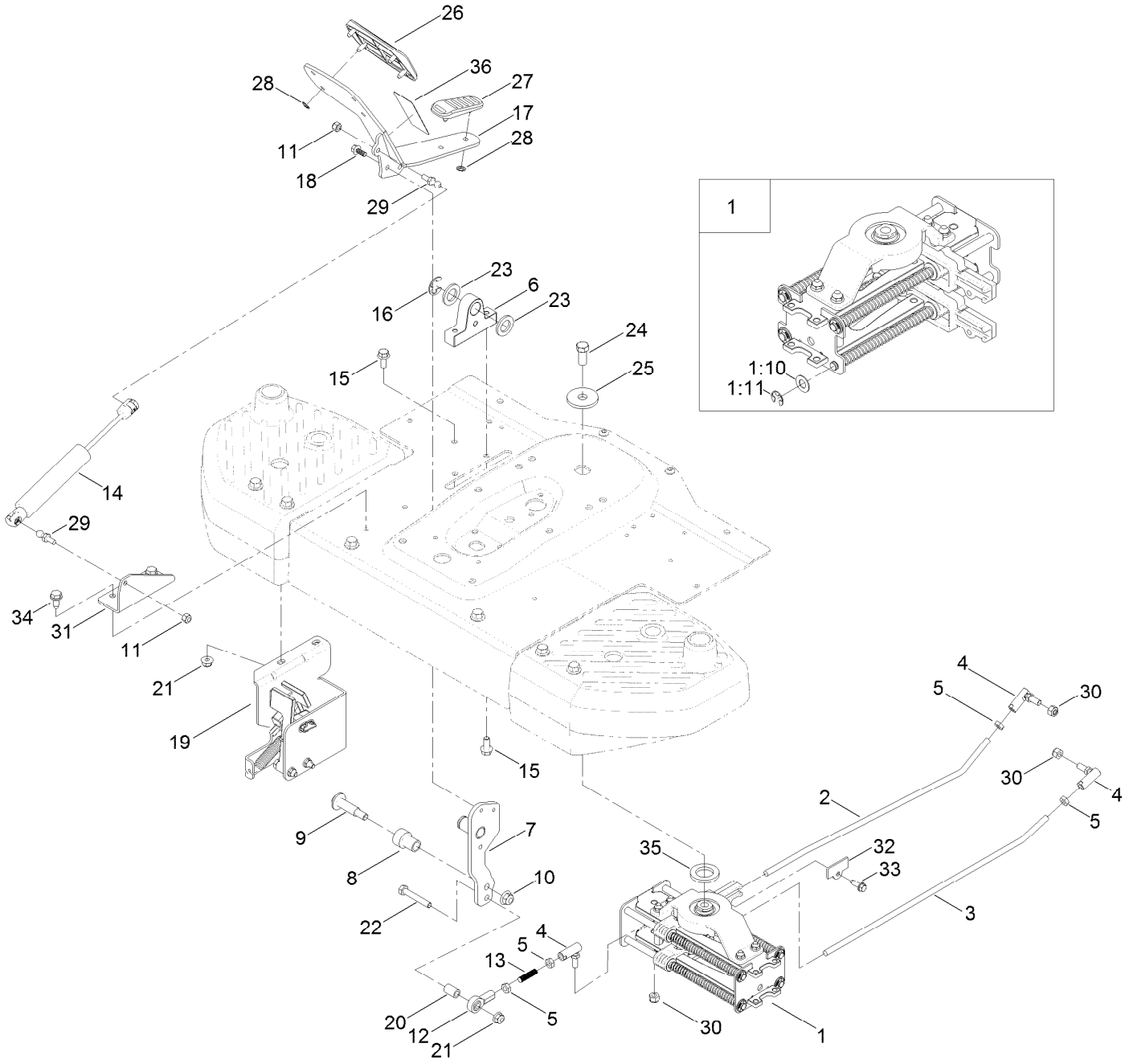

Speed Control Assembly (continued)

Ref.	Part Number	Qty.	Description
1	131-0904	1	Speed Control ASM
1:10	131-8667	12	Washer-Thrust
1:11	32120-18	8	E-Ring
2	127-0115	1	Rod-Hydro, RH
3	127-0116	1	Rod-Hydro, LH
4	2411-33	3	Balljoint-RH (W/Grommet)
5	3220-2	4	Nut-Jam
6	130-6887	1	Mount-Pedal Pivot
7	132-6907	1	Pivot Lever ASM
8	127-3397	1	Roller
9	56-6590	1	Bolt-Wheel
10	104-8301	1	Nut-HF, NI
11	3296-42	4	Nut-Lock, NI
12	1-543017	1	Balljoint-RH
13	130-6906	1	Rod-Threaded
14	133-1171	1	Damper-Non Cavitating
15	3234-47	4	Screw-HHF
16	32151-48	1	E-Ring
17	132-6865-01	1	Pedal-Traction
18	99-6810	2	Screw-HHF
19	131-0903	1	Neutral Return ASM
20	131-1034	1	Spacer
21	104-8300	3	Nut-HF, NI
22	322-10	1	Screw-HH
23	70-1160	2	Washer
24	324-4	1	Screw-HH
25	84-1560	1	Washer-Thrust
26	98-9040	1	Pad-Toe, Hydro Pedal
27	98-9039	1	Pad-Heel, Hydro Pedal
28	32112-6	6	Nut-Push
29	132-6917	2	Ball Stud
30	3296-4	3	Nut-Lock
31	130-6910-03	1	Bracket-Damper
32	131-1041	2	Cover-End Rod
33	32144-44	2	Screw-HWH, Thread Roll
34	32144-70	2	Screw-HWHTF
35	131-8736	1	Spacer-Bearing
36	132-6863	1	Decal-Release, Break

Neutral Return Assembly

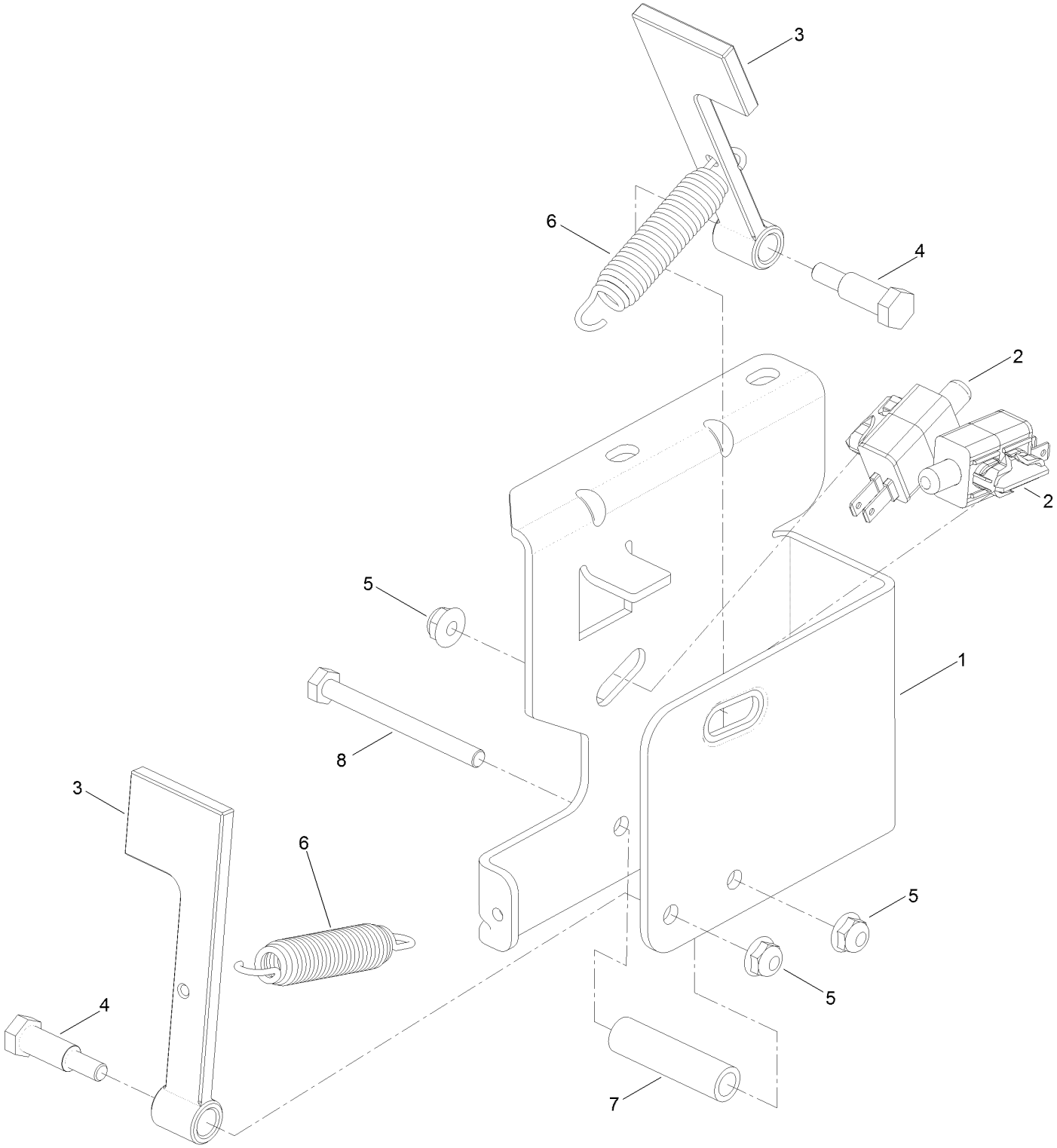

Neutral Return Assembly (continued)

Ref.	Part Number	Qty.	Description
1	132-0909-03	1	Bracket-Switch
2	110-6765	2	Switch
3	130-0782	2	Arm-Switch
4	119-2309	2	Bolt-Shoulder
5	104-7201	3	Nut-HF
6	132-6915	2	Spring-Extension
7	131-3976	1	Spacer
8	321-14	1	Screw-HH

Steering Gear Assembly

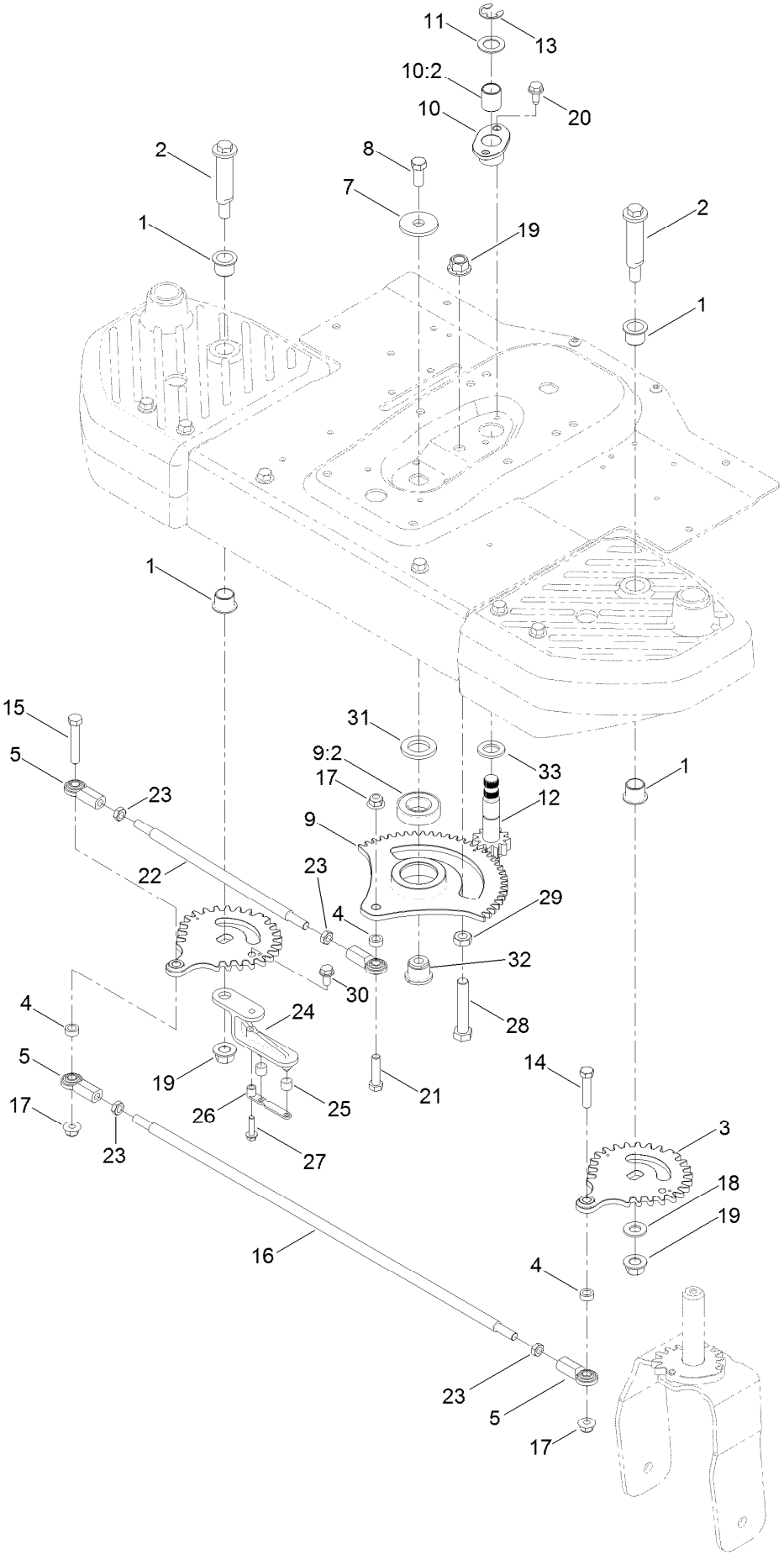

Steering Gear Assembly (continued)

Ref.	Part Number	Qty.	Description
1	103-4398	4	Bearing-Flange, Iglide
2	131-1031	2	Bolt-Shoulder
3	130-0830	2	Gear-Wheel, 30 Tooth
4	83-1050	3	Spacer
5	103-0608	4	Joint-Ball, End
7	84-1560	1	Washer-Thrust
8	324-4	1	Screw-HH
9	131-8731	1	Sector Gear ASM
9:2	109-3678	1	Bearing-Ball
10	131-8733	1	Flange Bearing ASM
10:2	115-7019	1	Bushing-Straight
11	119-7640	1	Washer-Thrust
12	125-5508	1	Lower Steering Shaft ASM
13	32151-48	1	E-Ring
14	323-9	1	Screw-HH
15	323-11	1	Screw-HH
16	131-1035	1	Rod-Cross, Narrow
17	104-8301	3	Nut-HF, NI
18	3256-26	1	Washer-Flat
19	99-5107	3	Nut-Lock
20	32144-70	2	Screw-HWHTF
21	323-8	1	Screw-HH
22	131-1036	1	Rod-Steering, Narrow
23	3220-3	4	Nut-HJ
24	130-6878	1	Lever-Cable
25	131-3951	2	Bushing
26	131-3950	1	Strap-Roller
27	32144-86	1	Screw-HWHTF
28	325-11	1	Screw-HH
29	3218-5	1	Nut-Jam
30	32144-14	1	Screw-HWHTF
31	131-8736	1	Spacer-Bearing
32	131-8737	1	Pivot-Bearing
33	70-1160	1	Washer

Steering Cable Assembly

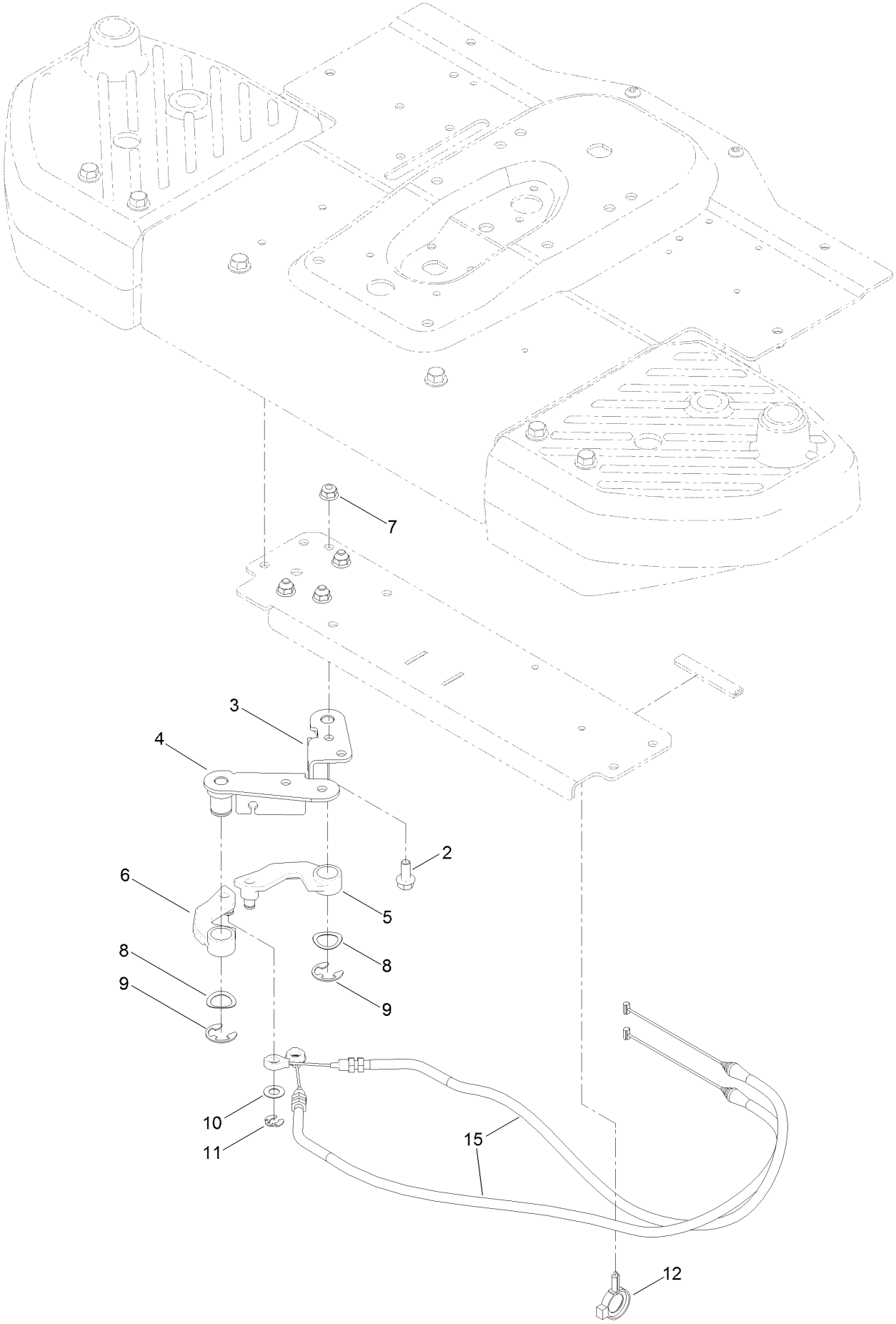

Steering Cable Assembly (continued)

Ref.	Part Number	Qty.	Description
2	3234-47	4	Screw-HHF
3	132-6943	1	Cable Bracket ASM
4	132-6944	1	Cable Bracket ASM
5	131-3623	1	Arm-Cable, RH
6	131-3647	1	Arm-Cable, LH
7	104-8300	4	Nut-HF, NI
8	7896	2	Washer-Bowed
9	32151-48	2	E-Ring
10	37-8080	2	Washer-Thrust
11	32151-47	2	Ring-Retaining
12	105-1853	1	Clamp-Hose
15	127-0118	2	Cable-Steering

Steering Assembly

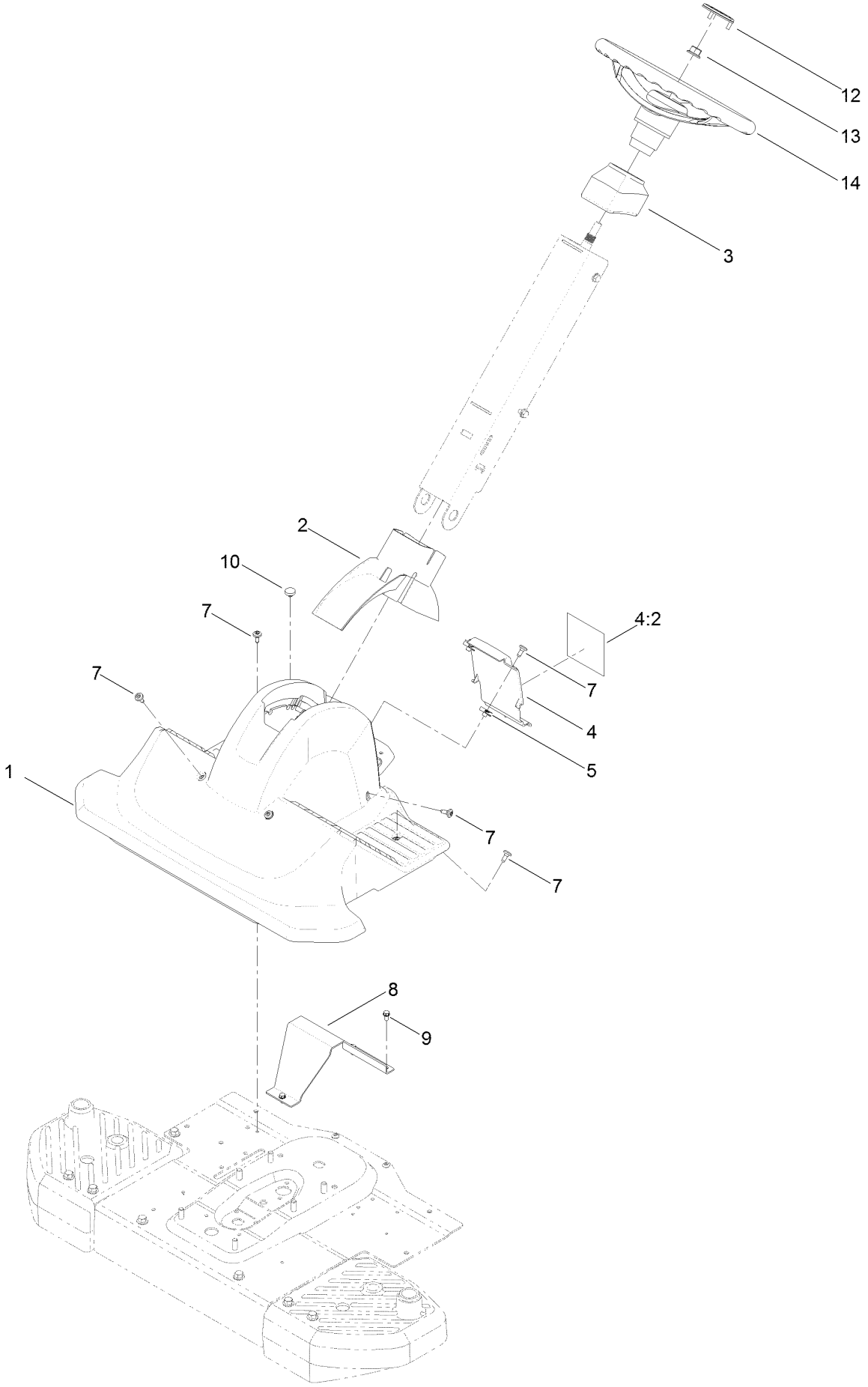

Steering Assembly (continued)

Ref.	Part Number	Qty.	Description
1	133-1152	1	Shroud-Styling, Front
2	131-1028	1	Cover-Pivot, Column
3	131-1066	1	Cap-Column
4	131-4099	1	Rear Cover And Decal ASM
4:2	132-0870	1	Decal-Danger
5	107069	2	Clip
7	120-7950	9	Screw-Shoulder
8	131-1029-03	1	Support-Footrest
9	32144-4	3	Screw-HWH
10	1-513658	1	Bumper
12	131-3630	1	Cap-Wheel, Steering
13	99-5107	1	Nut-Lock
14	131-0957	1	Wheel-Steering

Motion Control Assembly

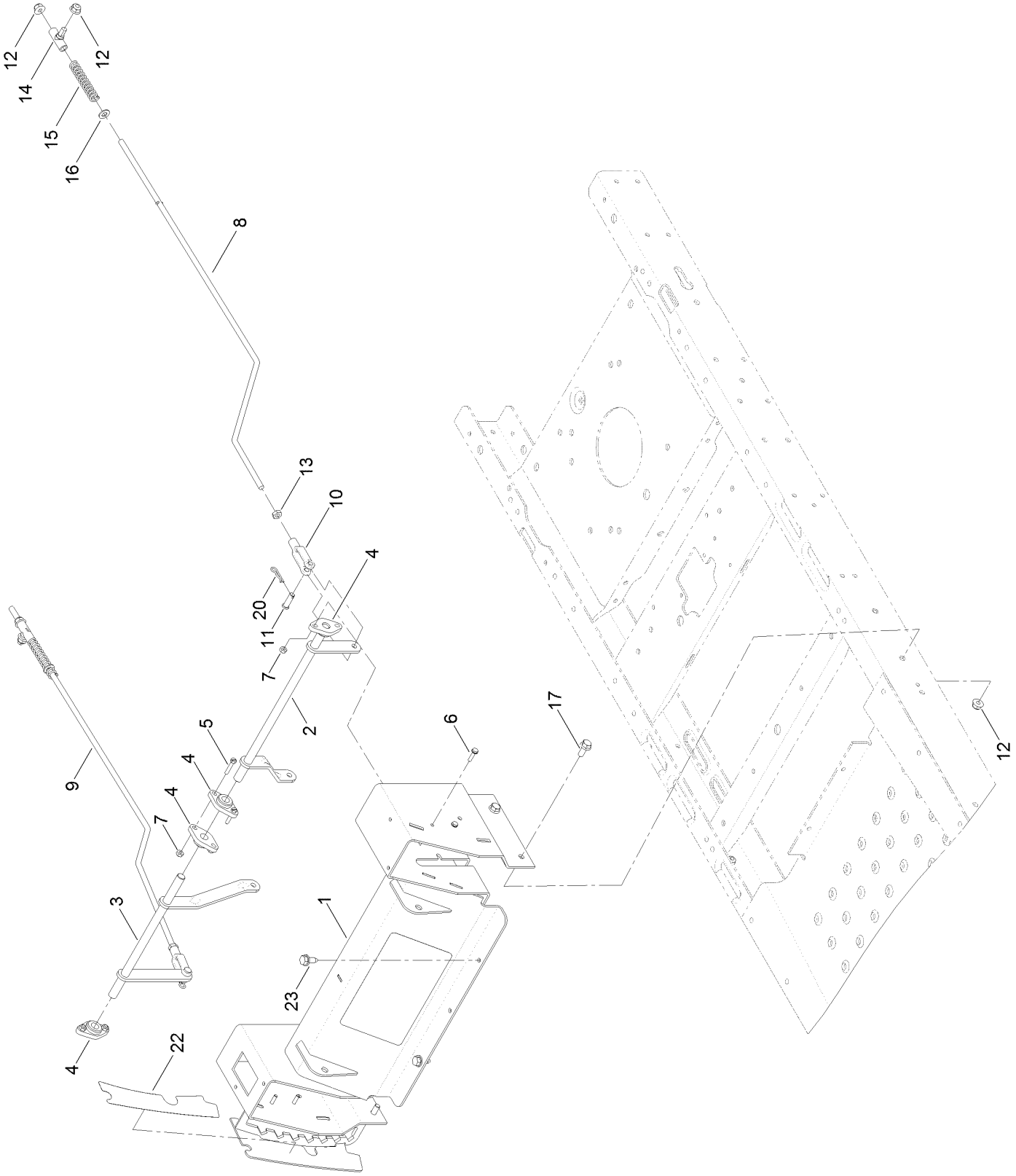

Motion Control Assembly (continued)

Ref.	Part Number	Qty.	Description
1	130-6898-03	1	Control Box ASM
2	132-6884	1	Bellcrank-LH
3	132-6890	1	Bellcrank-RH
4	127-0146	4	Bearing-Flange
5	32105-12	2	Screw
6	3290-126	4	Screw-HWH
7	3296-2	6	Nut-Lock, NI
8	125-1812	1	Rod-Hydro, LH
9	127-3378	1	Rod-Hydro, RH
10	1-303105	2	Yoke-Adjustable
11	1-808280	2	Pin-Clevis
12	104-8300	8	Nut-HF, NI
13	3220-2	2	Nut-Jam
14	119-8842	2	Mount-Rod, Hydro
15	1-603807	2	Spring-Return, Neutral
16	3256-23	2	Washer-Plain
17	3234-47	4	Screw-HHF
20	1-806003	2	Pin-Cotter
22	119-8871	1	Decal-HOC
23	32144-70	2	Screw-HWHTF

Brake Box Assembly

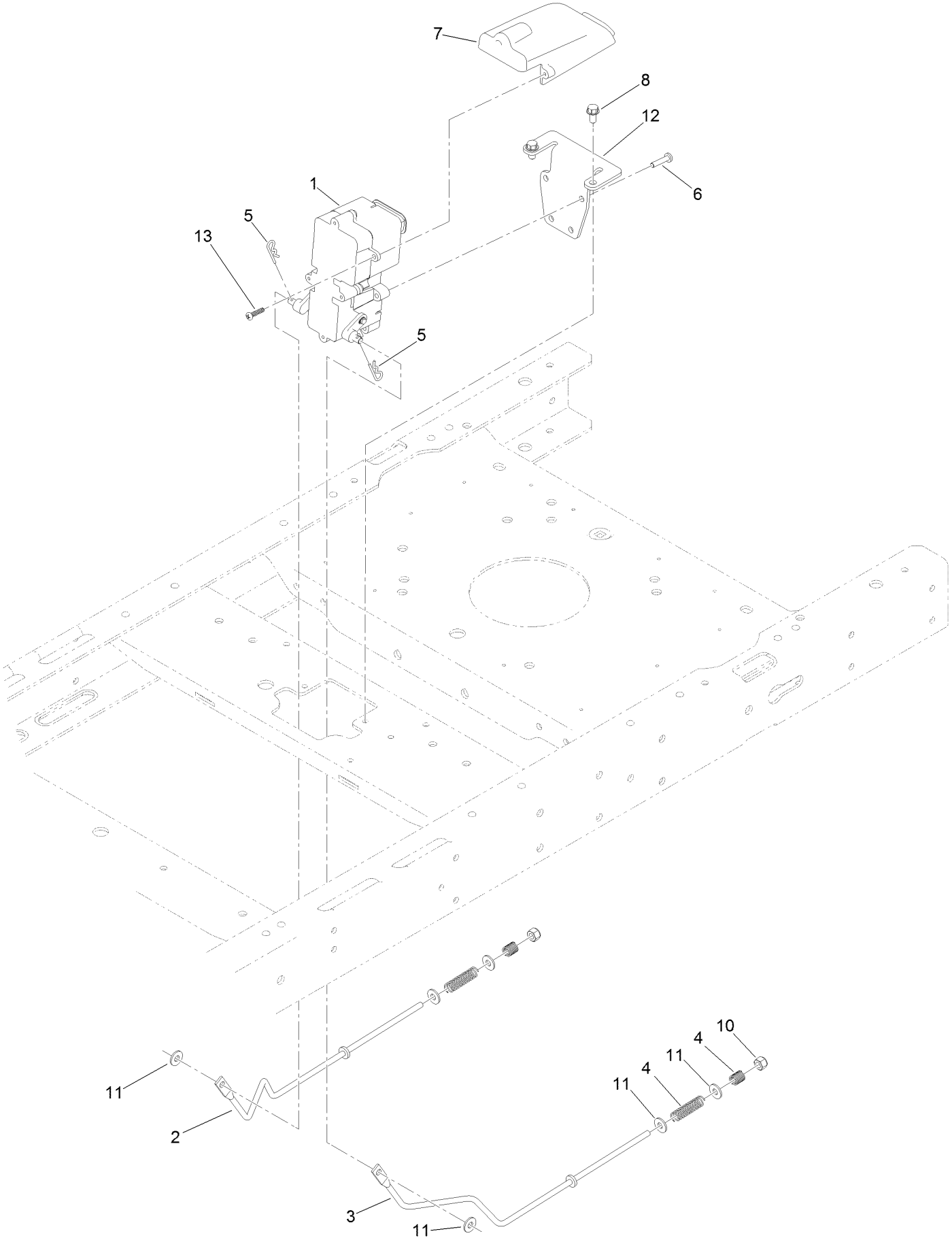

Brake Box Assembly (continued)

Ref.	Part Number	Qty.	Description
1	130-0795	1	Brake Box ASM
2	121-2974	1	Rod-Brake, RH
3	121-2975	1	Rod-Brake, LH
4	117-1169	4	Spring-Compression
5	3290-307	2	Pin-Cotter
6	32144-36	4	Screw-PPH
7	132-6949	1	Cover-Connector
8	32144-4	2	Screw-HWH
10	3296-42	2	Nut-Lock, NI
11	119-8952	6	Washer
12	130-0790-03	1	Bracket-Mount, Brake
13	94-4496	2	Screw-PPH

Seat Assembly

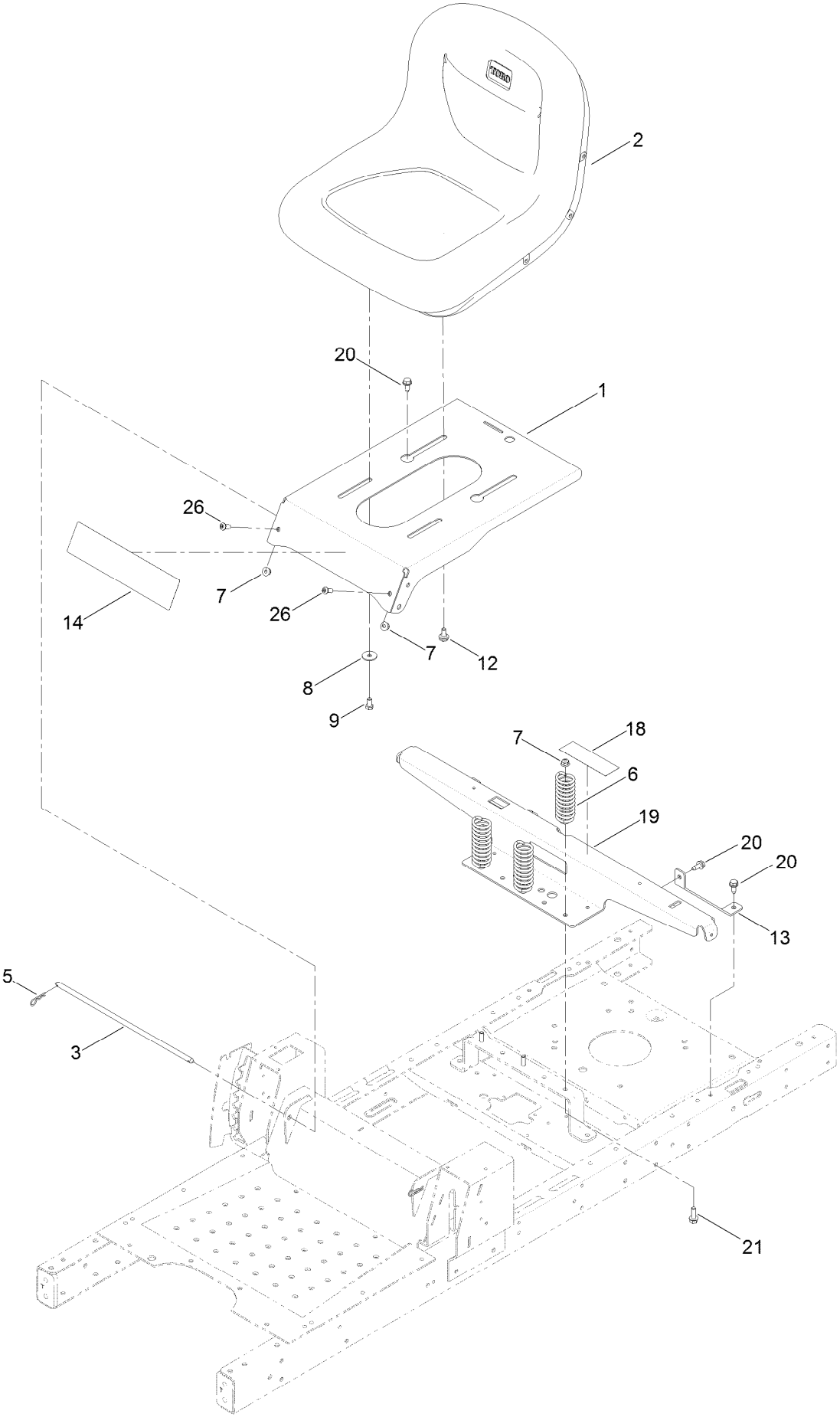

Seat Assembly (continued)

Ref.	Part Number	Qty.	Description
1	131-4037-01	1	Pan-Seat
2	119-8828	1	Seat-15 Inch
3	119-3433	1	Rod-Pivot, Narrow
5	3290-250	2	Pin-Cotter
6	92-7054	3	Spring-Compression
7	104-8300	5	Nut-HF, NI
8	5-4460	2	Washer-Pivot
9	322-2	2	Screw-HH
12	37-8771	2	Bolt-Shoulder
13	119-3431-03	2	Support-Tank, Rear
14	131-3657	1	Decal-Timecutter
18	106-8717	1	Decal-Service, CE
19	131-1040-03	1	Support-Pod
20	32144-70	4	Screw-HWHTF
21	3234-29	3	Screw-HHF
26	3274-55	2	Screw-HSBH

Belt and Idler Assembly

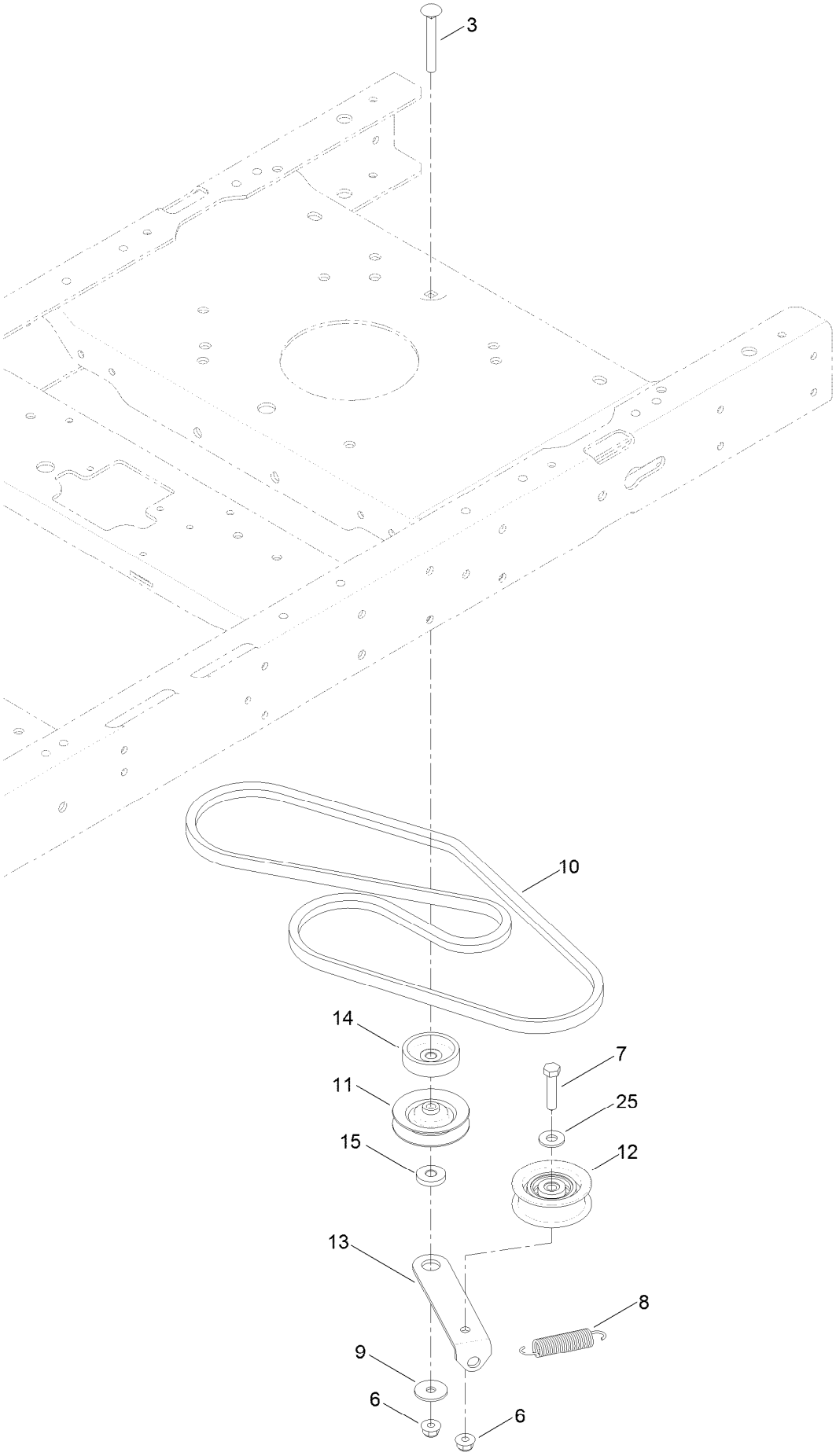

Belt and Idler Assembly (continued)

Ref.	Part Number	Qty.	Description
3	3230-8	1	Screw-CARR
6	104-8300	2	Nut-HF, NI
7	322-7	1	Screw-HH
8	104-6415	1	Spring-Return, Pedal
9	5-4460	1	Washer-Pivot
10	130-6975	1	V-Belt
11	119-8822	1	Pulley-Idler
12	106-2176	1	Pulley-Idler
13	119-3326	1	Arm-Idler
14	119-3353	1	Spacer
15	119-3327	1	Spacer-Arm, Idler
25	3256-3	1	Washer-Flat

Hydro Transaxle Drive and Rear Wheel Assembly

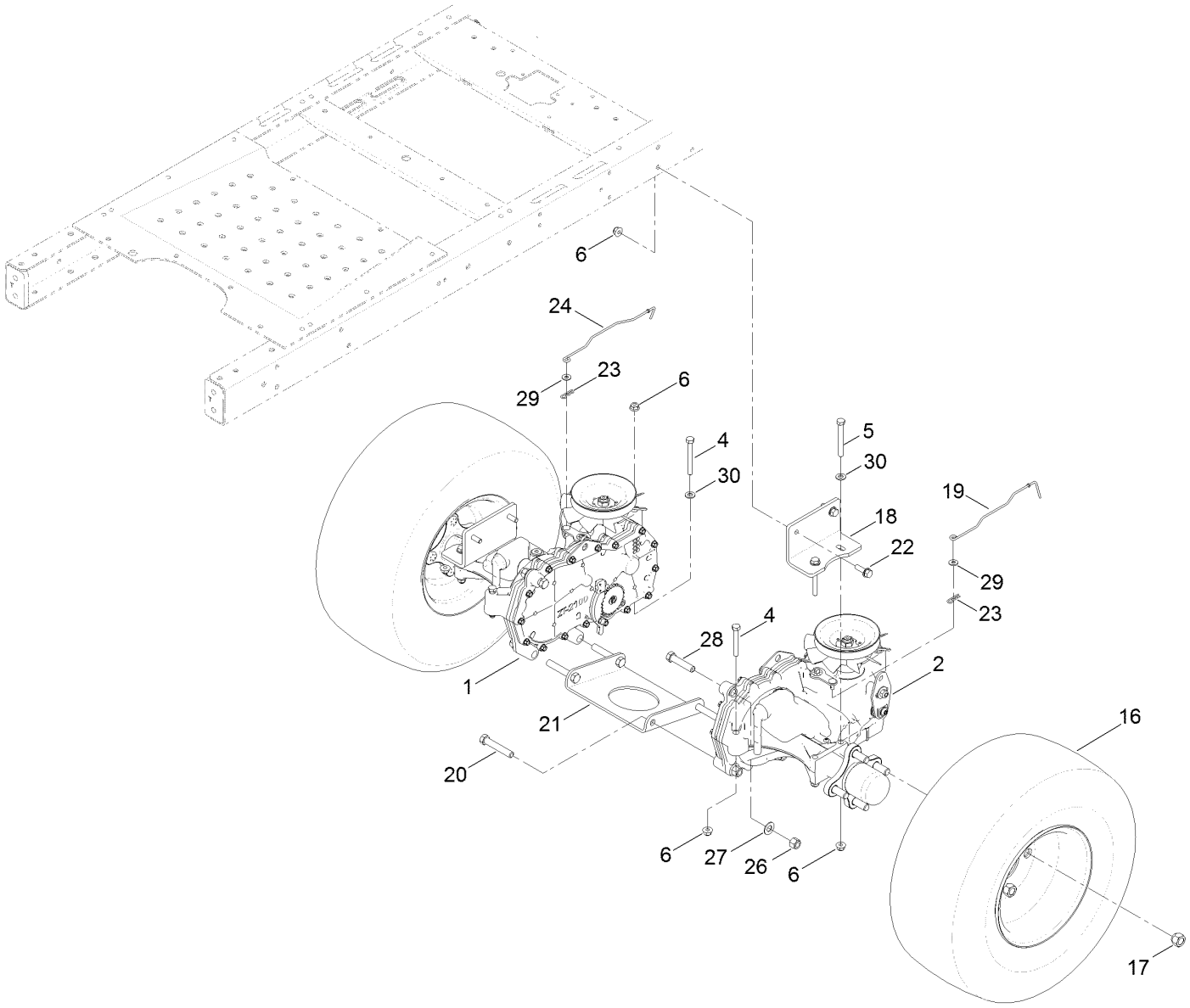

Hydro Transaxle Drive and Rear Wheel Assembly (continued)

Ref.	Part Number	Qty.	Description
1	119-3331	1	RH Hydro Transaxle ASM
2	119-3330	1	LH Hydro Transaxle ASM
4	322-11	4	Screw-HH
5	322-13	4	Screw-HH
6	104-8300	12	Nut-HF, NI
16	131-3671	2	2 Ply Wheel And Tire ASM
17	242-50	8	Nut-Lug
18	117-7264-03	2	Mount-Hydro
19	131-0900	1	Rod-Bypass, LH
20	324-10	4	Screw-HH

Ref.	Part Number	Qty.	Description
21	119-3339-03	1	Plate-Cross, Hydro
22	3234-29	4	Screw-HHF
23	3290-307	2	Pin-Cotter
24	130-7049	1	Rod-Bypass, RH
26	3296-48	6	Nut-Lock, NI
27	3256-25	6	Washer-Flat
28	324-8	2	Screw-HH
29	119-8952	2	Washer
30	3256-23	6	Washer-Plain

2 Ply Wheel and Tire Assembly No. 131-3671

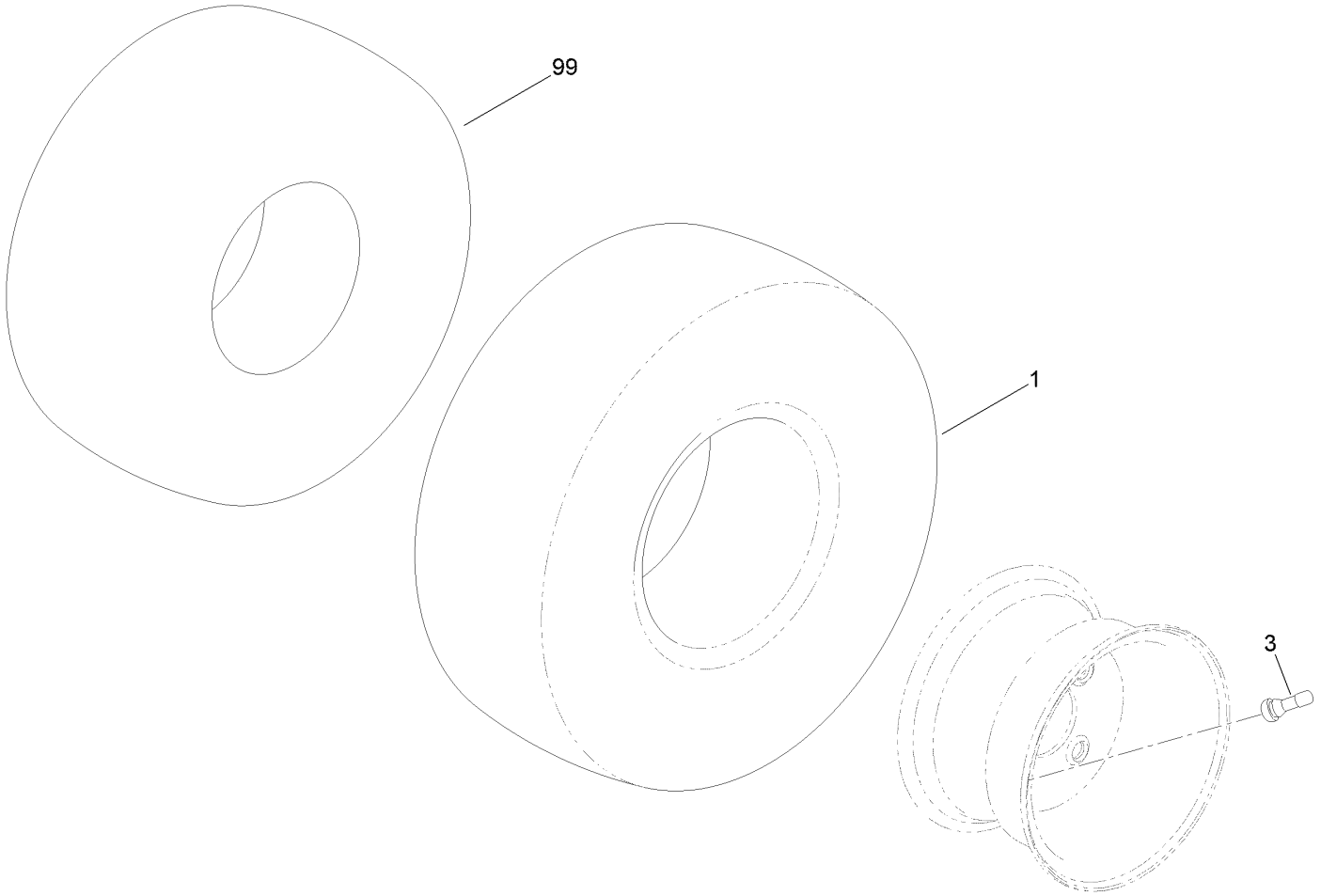

2 Ply Wheel and Tire Assembly No. 131-3671 (continued)

Ref.	Part Number	Qty.	Description
1	131-3678	1	Tire-2 Ply
3	232-27	1	Stem-Valve
99	107-2491	1	Tube-Tire

Right Hand Hydro Transaxle Assembly No. 119-3331

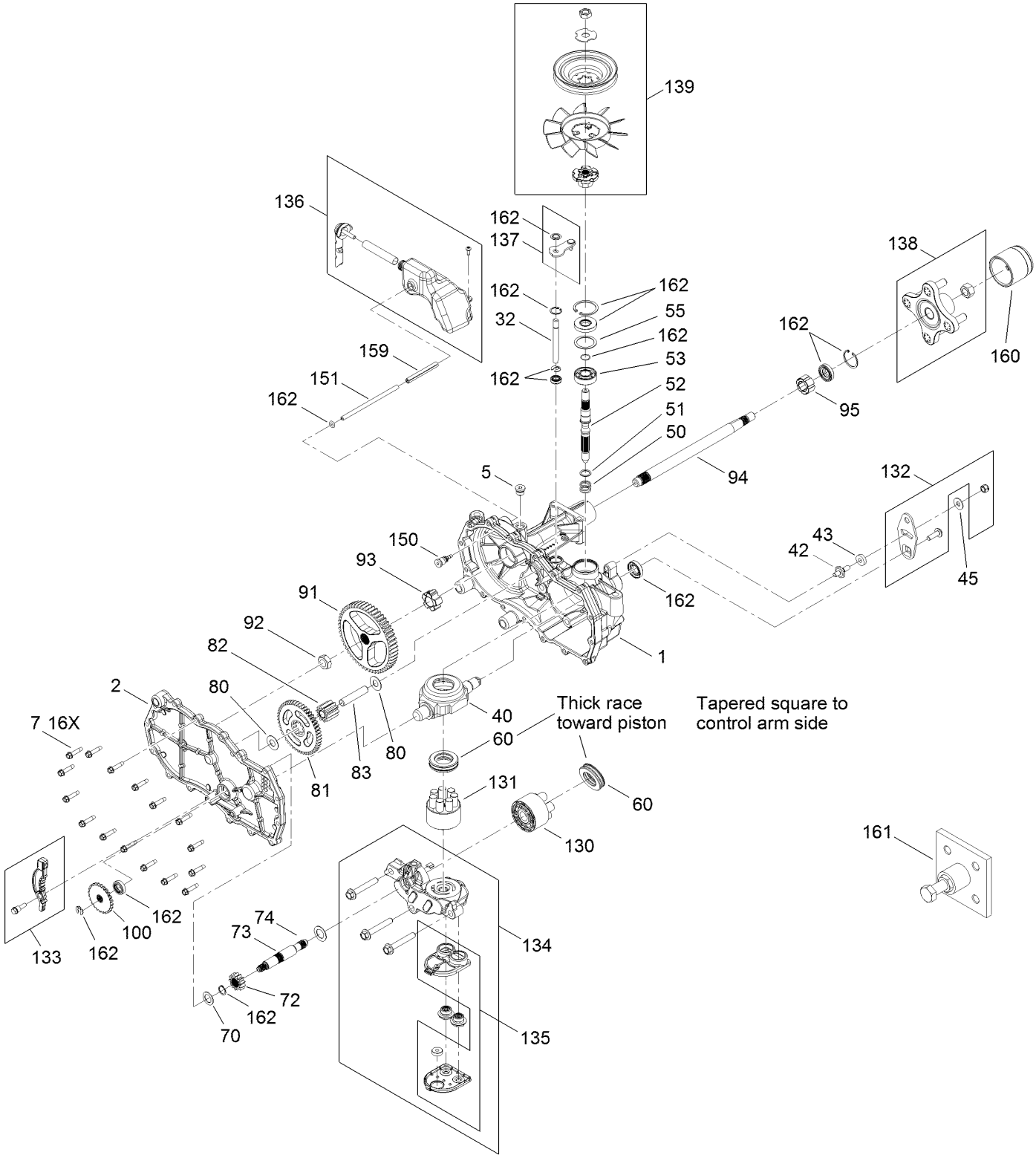

Right Hand Hydro Transaxle Assembly No. 119-3331 (continued)

Ref.	Part Number	Qty.	Description
1	120-5531	1	Main Housing ASM
2	120-5533	1	Housing Side Kit
5	104-2189	1	Plug-Thread, Straight
7	117-5359	16	Screw-HHF
13	104-2147	1	Sealant ●
32	106-8678	2	Rod-Bypass
40	104-5304	1	Swashplate-Trunnion
42	104-2116	1	Stud
43	112-9853	1	Puck-Friction
45	114-8491	1	Washer
50	120-5537	1	Spring-Compression
51	120-5538	1	Washer
52	104-5306	1	Shaft-Input
53	104-5311	1	Bearing-Ball
55	104-5308	1	Spacer
60	94-6922	1	Bearing-Thrust
70	104-5339	1	Washer-Flat
72	104-5316	1	Gear-Pinnion, 13T
73	106-8683	1	Shaft-Motor
74	104-5360	1	Washer
80	119-5541	2	Washer
81	104-5317	1	Gear-10T/48T
82	104-5318	1	Gear-Jackshaft, 10T
83	104-5329	1	Pin-Jackshaft
91	120-5539	1	Gear-Bull
92	104-2142	1	Nut-HJ
93	115-8314	1	Bushing-Inboard
94	120-5540	1	Shaft-Axle
95	120-5541	1	Bearing-Sleeve
100	106-8694	1	Disc-Brake, Cog
130	103-2666	1	Cylinder Block Kit
131	110-8561	1	Pump Block ASM
132	117-5362	1	Control Arm Kit
133	106-8688	1	Brake Arm Kit
134	112-9862	1	Center Section Filter Kit
135	114-1634	1	Filter Kit
136	121-5735	1	LH Expansion Tank Kit
137	107-2489	1	Bypass Arm Kit
138	121-5731	1	Hub Kit
139	121-5729	1	Fan Pulley Kit
150	104-5349	1	Fitting-SAE
151	115-8302	1	Hose
159	121-5728	1	Case-Tube
160	125-0041	1	Cap-Axle
161	114-8467	1	Puller-Hub, 4 Bolt
162	120-7103	1	Seal And Ring Kit

● Not illustrated

Left Hand Hydro Transaxle Assembly No. 119-3330

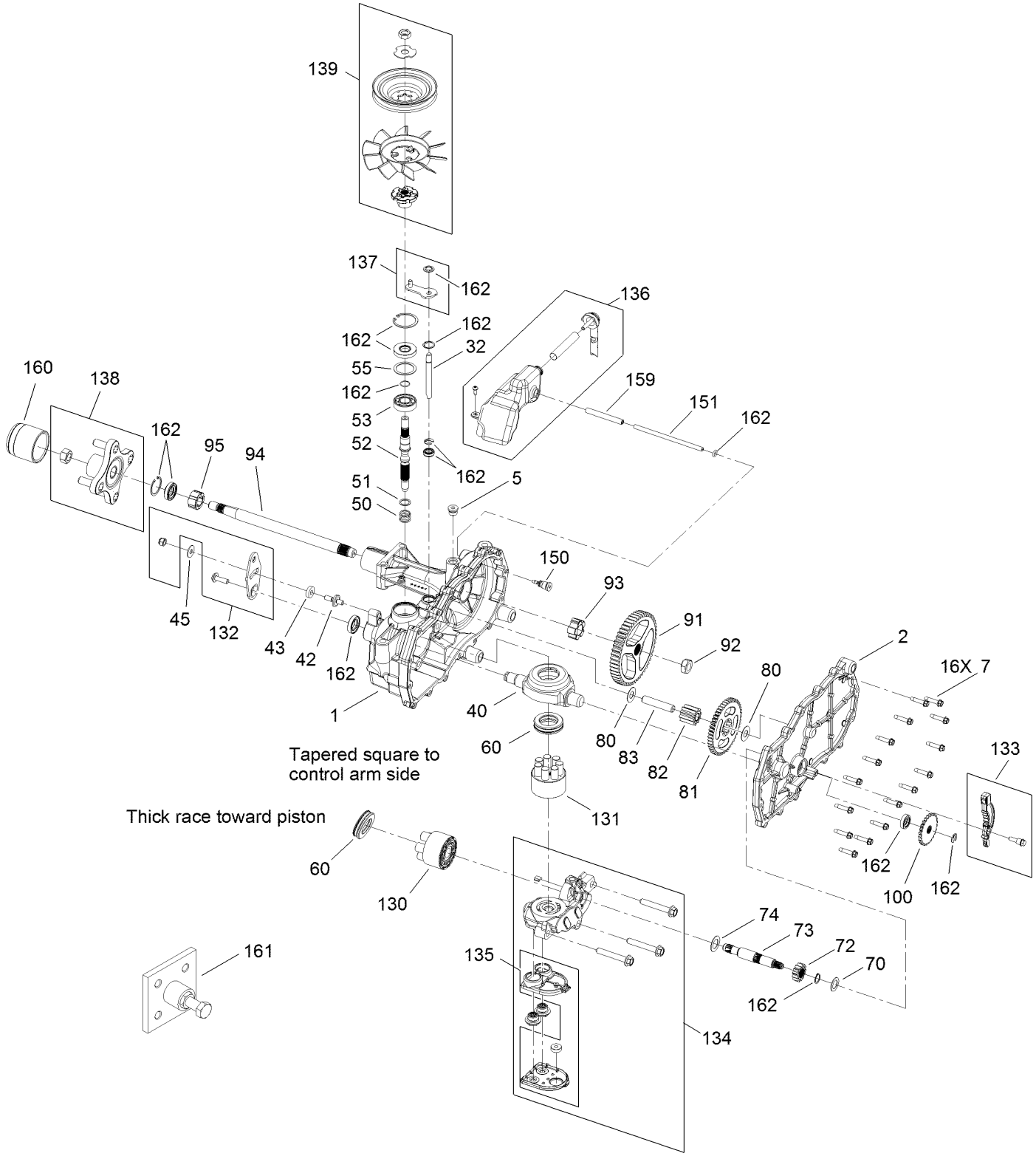

Left Hand Hydro Transaxle Assembly No. 119-3330 (continued)

Ref.	Part Number	Qty.	Description
1	120-5532	1	Main Housing ASM
2	120-5534	1	Housing Side Kit
5	104-2189	1	Plug-Thread, Straight
7	117-5359	16	Screw-HHF
13	104-2147	1	Sealant ●
32	106-8678	2	Rod-Bypass
40	104-5304	1	Swashplate-Trunnion
42	104-2116	1	Stud
43	112-9853	1	Puck-Friction
45	114-8491	1	Washer
50	120-5537	1	Spring-Compression
51	120-5538	1	Washer
52	104-5306	1	Shaft-Input
53	104-5311	1	Bearing-Ball
55	104-5308	1	Spacer
60	94-6922	1	Bearing-Thrust
70	104-5339	1	Washer-Flat
72	104-5316	1	Gear-Pinnion, 13T
73	106-8683	1	Shaft-Motor
74	104-5360	1	Washer
80	119-5541	2	Washer
81	104-5317	1	Gear-10T/48T
82	104-5318	1	Gear-Jackshaft, 10T
83	104-5329	1	Pin-Jackshaft
91	120-5539	1	Gear-Bull
92	104-2142	1	Nut-HJ
93	115-8314	1	Bushing-Inboard
94	120-5540	1	Shaft-Axle
95	120-5541	1	Bearing-Sleeve
100	106-8694	1	Disc-Brake, Cog
130	103-2666	1	Cylinder Block Kit
131	110-8561	1	Pump Block ASM
132	117-5362	1	Control Arm Kit
133	106-8688	1	Brake Arm Kit
134	112-9861	1	Center Section Filter Kit
135	114-1634	1	Filter Kit
136	121-5730	1	RH Expansion Tank Kit
137	120-5549	1	Bypass Kit
138	121-5731	1	Hub Kit
139	121-5729	1	Fan Pulley Kit
150	104-5349	1	Fitting-SAE
151	115-8302	1	Hose
159	121-5728	1	Case-Tube
160	125-0041	1	Cap-Axle
161	114-8467	1	Puller-Hub, 4 Bolt
162	120-7103	1	Seal And Ring Kit

● Not illustrated

Clutch Assembly

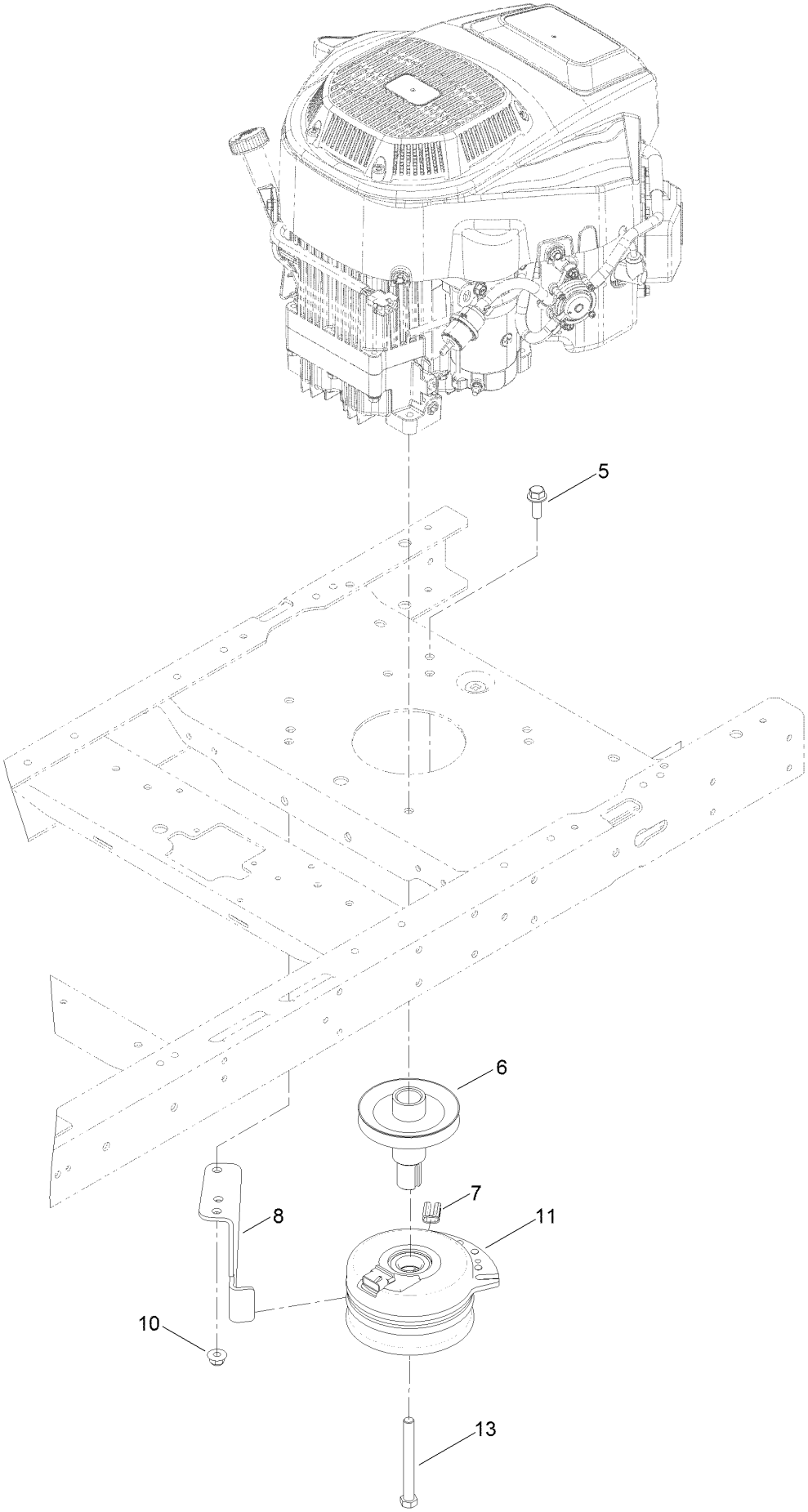

Clutch Assembly (continued)

Ref.	Part Number	Qty.	Description
5	3234-42	1	Screw-HHF
6	130-6854	1	Pulley-Engine
7	120-2217	1	Isolator-Clutch
8	119-8884	1	Stop-Clutch (Narrow)
10	104-8301	1	Nut-HF, NI
11	117-7468	1	Clutch-Electric
13	3212-16	1	Screw-HH

Engine and Muffler Assembly

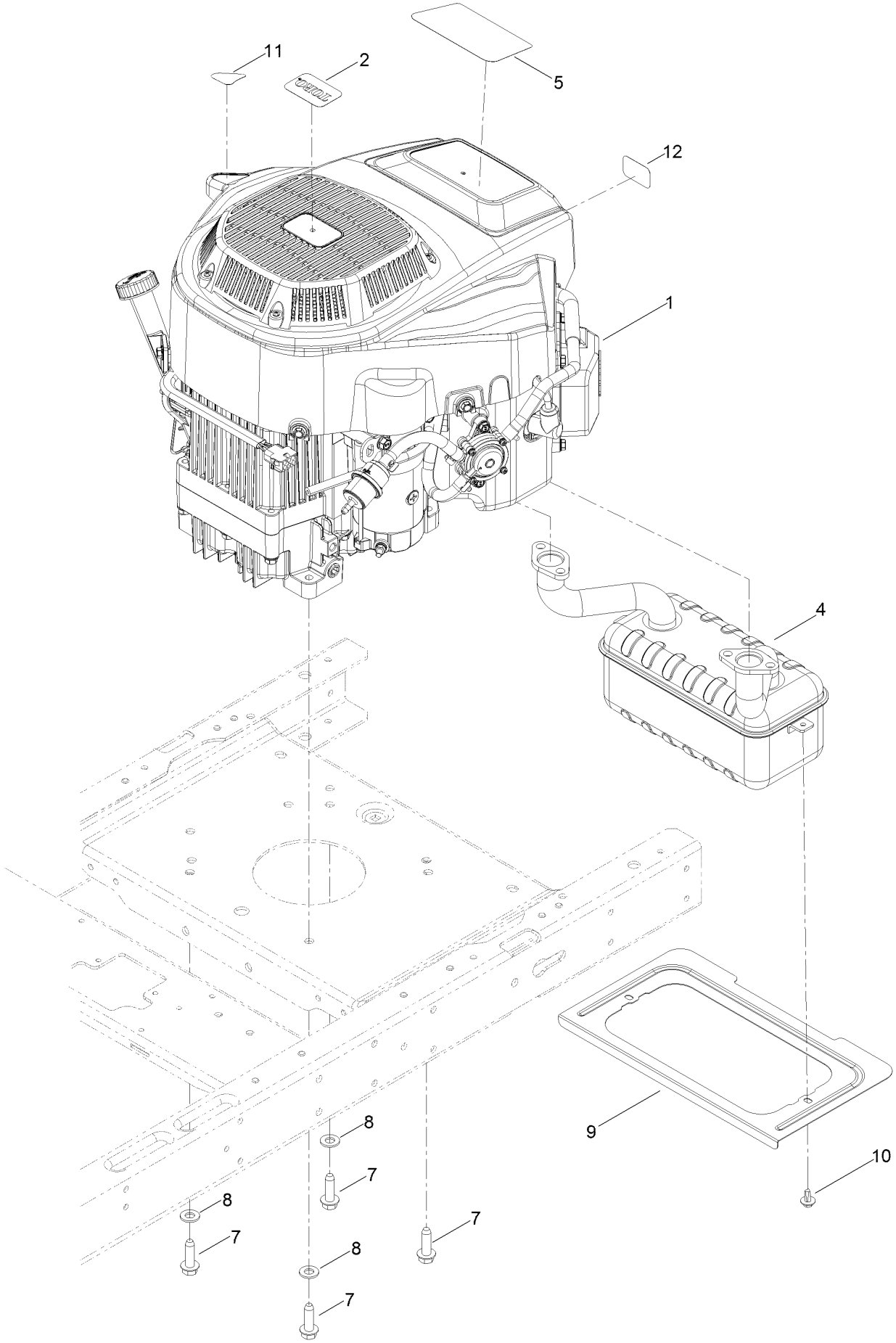

Engine and Muffler Assembly (continued)

Ref.	Part Number	Qty.	Description
1	127-9041	1	Engine-2P77F
2	131-4157	1	Decal
4	130-6851	1	Muffler
5	132-0902	1	Decal-Engine
7	32144-109	4	Screw-Taptite
8	3256-24	3	Washer-Flat
9	131-1071-03	1	Shield-Heat
10	46-8560	2	Screw-HHFTF
11	131-1097	1	Decal-Drain, Oil
12	127-9076	1	Placard-Intake

Fuel System Assembly with Non-Canister Style Air Filter

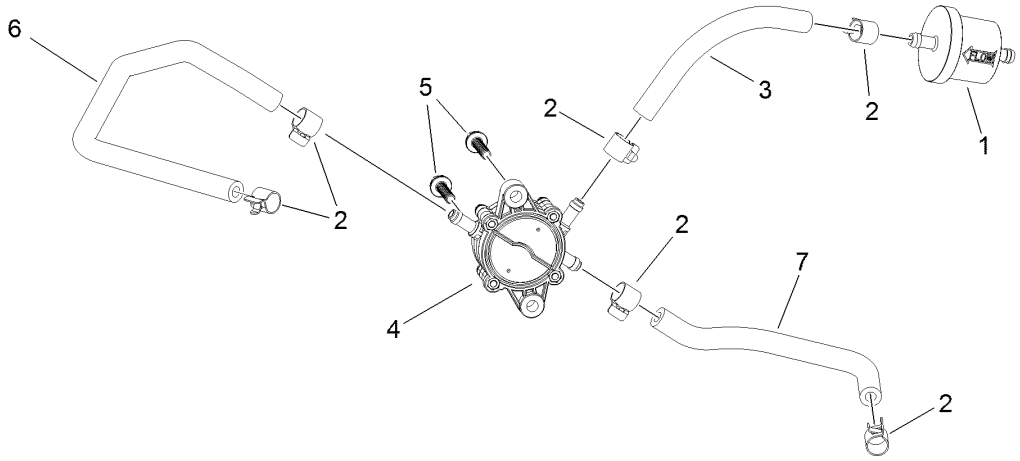

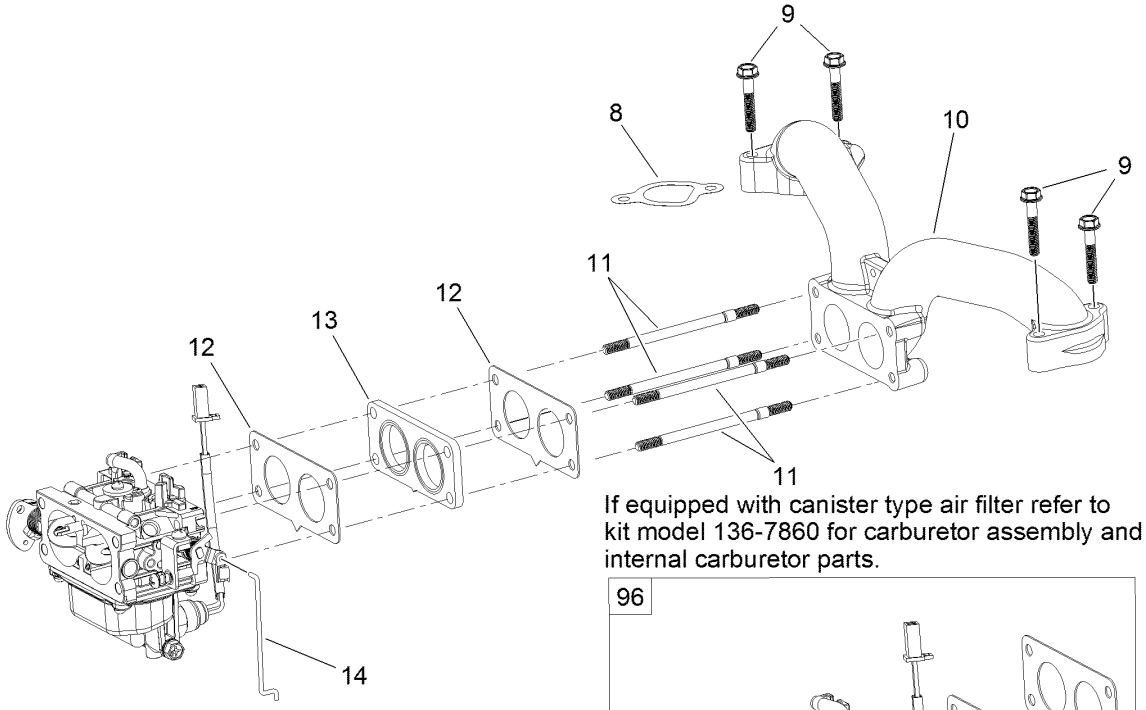

If equipped with canister type air filter refer to kit model 136-7860 for carburetor assembly and internal carburetor parts.

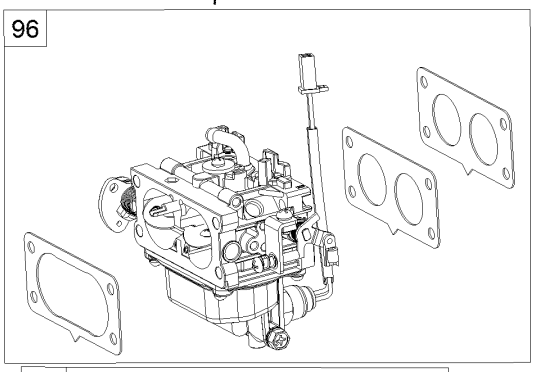

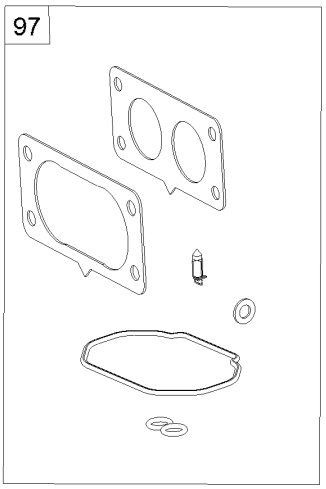

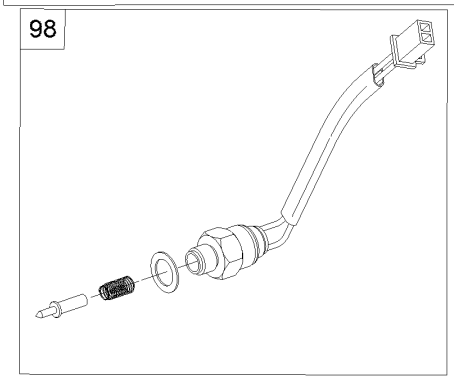

Fuel System Assembly with Non-Canister Style Air Filter (continued)

Ref.	Part Number	Qty.	Description
1	133-1563	1	Filter-Fuel
2	120-4251	6	Clamp-Fuel Line
3	120-4371	1	Line-Fuel
4	127-9206	1	Pump-Fuel
5	120-4225	2	Screw-HHF
6	127-9205	1	Hose-Fuel
7	127-9207	1	Hose-Fuel
8	127-9230	2	Gasket-Intake
9	120-4284	4	Screw-HHF
10	127-9244	1	Manifold-Intake
11	127-9245	4	Stud
12	127-9246	2	Gasket-Carburetor
13	127-9247	1	Insulator-Carburetor
14	127-9248	1	Linkage-Throttle
96	127-9289	1	Carburetor Replacement Kit
97	127-9290	1	Carburetor Repair Kit
98	127-9292	1	Solenoid Kit
99	127-9303	1	High Altitude Kit ●

● Not illustrated

Carburetor Assembly No. 127-9289 with Non-Canister Style Air Filter

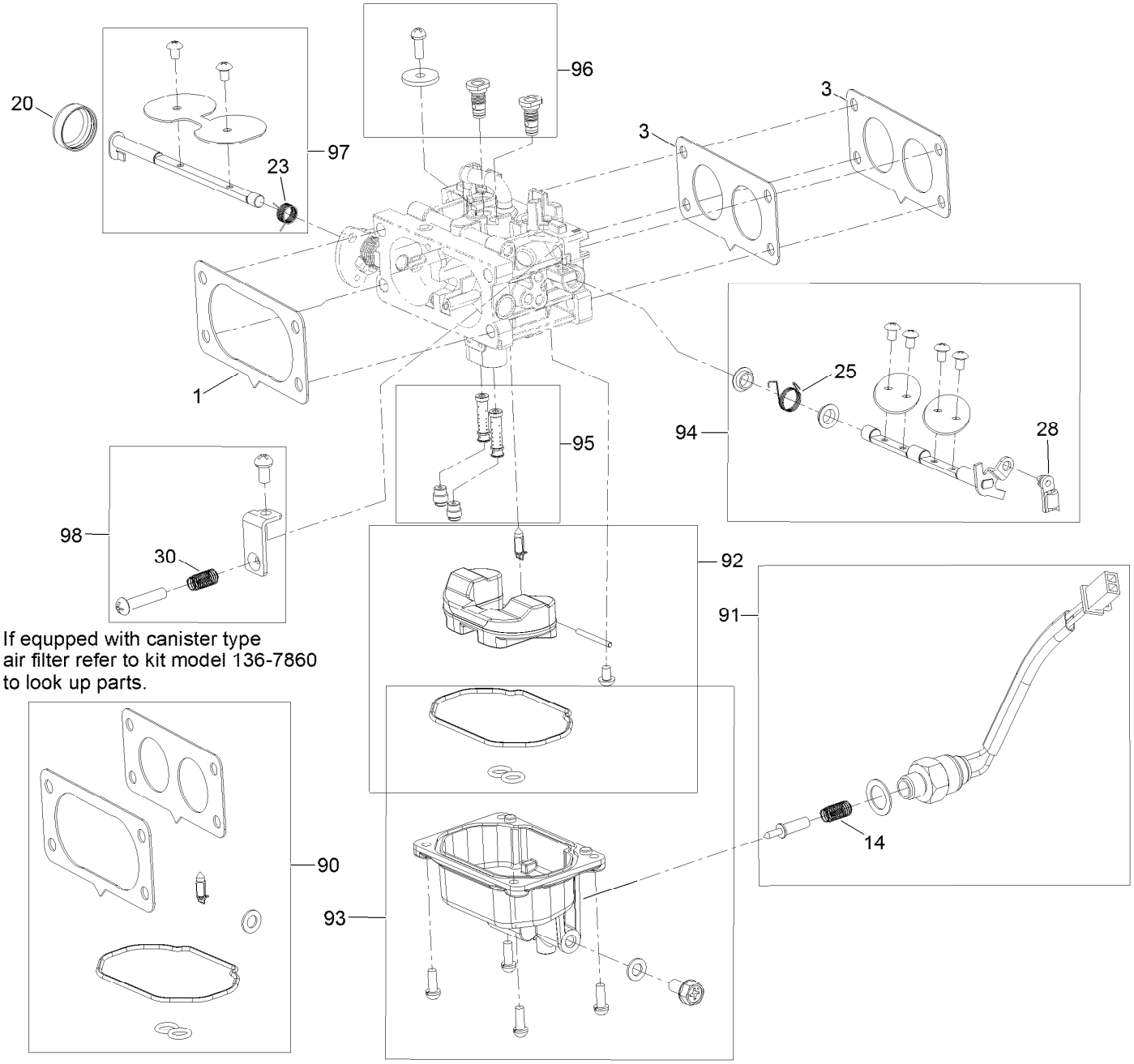

If equpped with canister type air filter refer to kit model 136-7860 to look up parts.

Carburetor Assembly No. 127-9289 with Non-Canister Style Air Filter (continued)

Ref.	Part Number	Qty.	Description
1	127-9249	1	Carburetor
1	127-9251	1	Gasket-Carburetor
3	127-9246	2	Gasket-Carburetor
14	127-9319	1	Spring
20	127-9325	1	Cover-Shaft, Choke
23	127-9328	1	Spring
25	127-9330	1	Spring
28	127-9333	1	Clamp-Lock
30	127-9335	1	Spring

Ref.	Part Number	Qty.	Description
90	127-9290	1	Carburetor Repair Kit
91	127-9292	1	Solenoid Kit
92	127-9340	1	Float Kit
93	127-9341	1	Bowl Kit
94	127-9342	1	Throttle Shaft Kit
95	127-9343	1	Nozzle And Jet Kit
96	127-9344	1	Air Jet Kit
97	127-9345	1	Choke Shaft Kit
98	127-9347	1	Idlestop Kit

Air Intake and Filtration Assembly with Non-Canister Style Air Filter

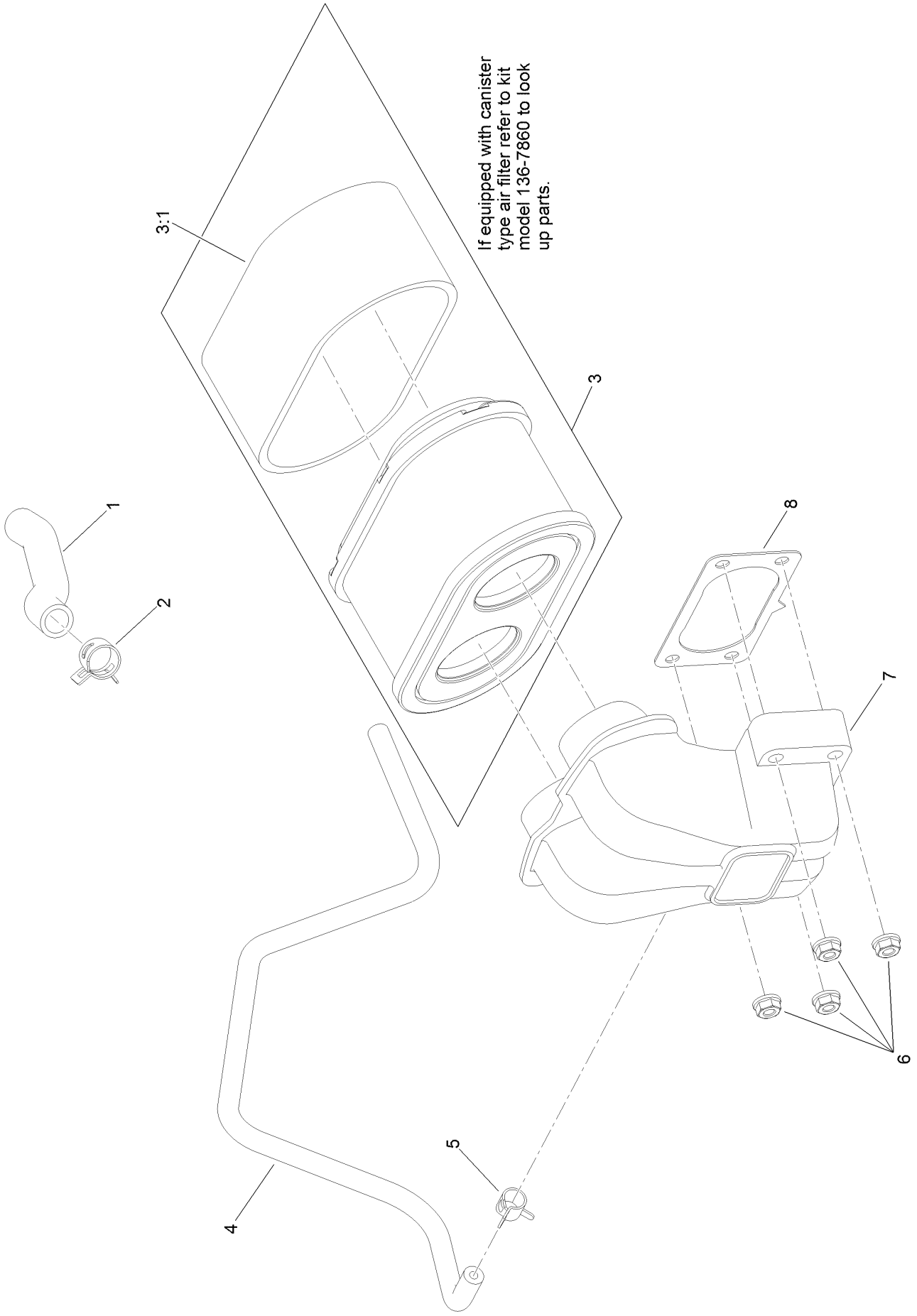

Air Intake and Filtration Assembly with Non-Canister Style Air Filter (continued)

Ref.	Part Number	Qty.	Description
1	127-9235	1	Tube-Breather
2	127-9234	2	Clamp-Hose
3	127-9252	1	Filter-Air, Complete
3:1	127-9288	1	Filter-Pre, Foam
4	127-9253	1	Hose-Fuel
5	127-9187	1	Clamp-Hose
6	120-4236	4	Nut-Flange
7	127-9047	1	Manifold-Filter, Air
8	127-9251	1	Gasket-Carburetor

Ignition and Electrical Assembly

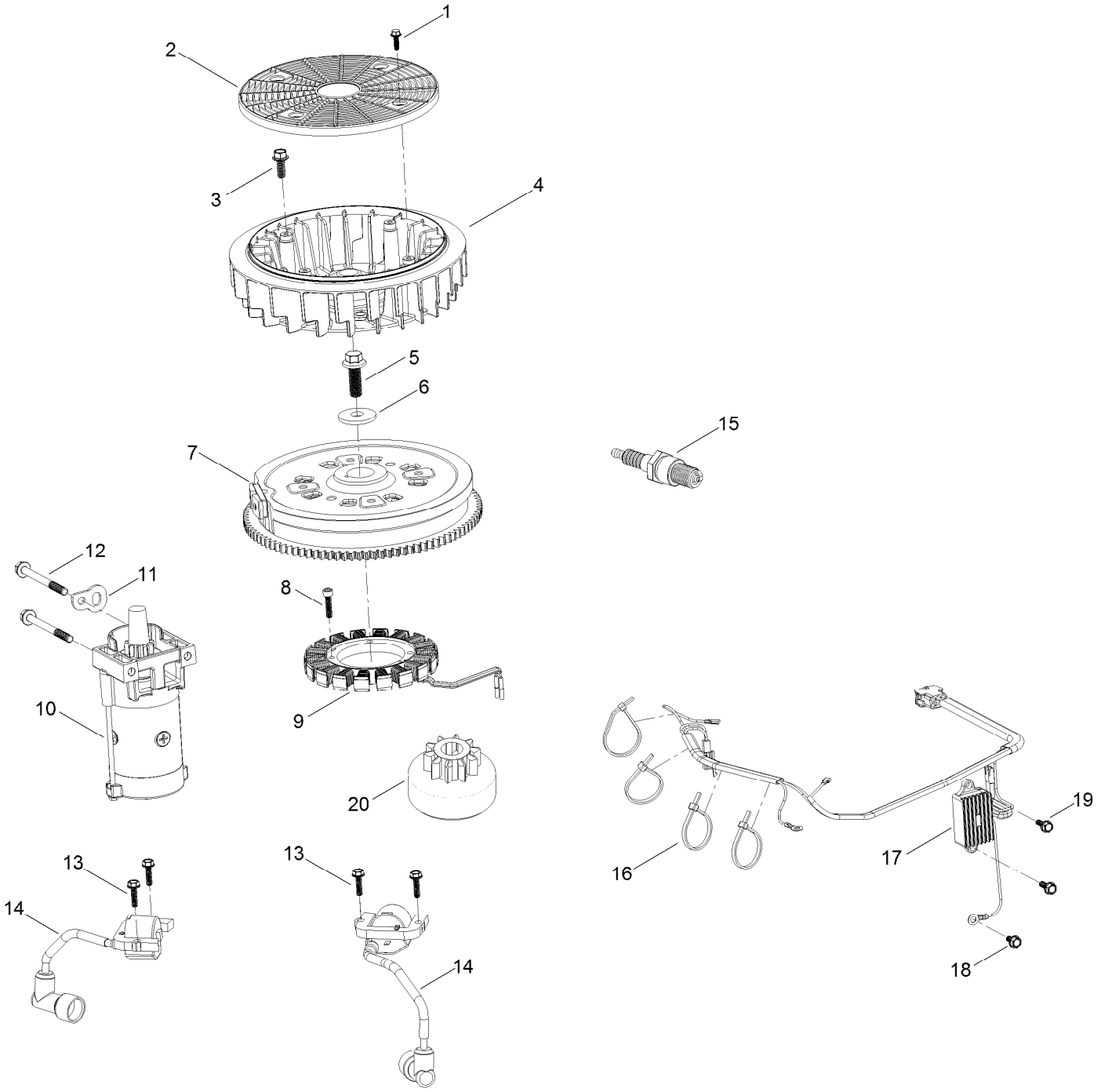

Ignition and Electrical Assembly (continued)

Ref.	Part Number	Qty.	Description
1	127-9197	4	Screw-HWH
2	127-9198	1	Screen-Rotating
3	127-9199	4	Screw-HWH
4	127-9200	1	Fan-Cooling
5	127-9201	1	Screw-HWH
6	127-9202	1	Washer-Flat
7	127-9306	1	Flywheel
8	127-9210	4	Screw-HSH
9	127-9211	1	Alternator
10	133-1564	1	Motor-Starter
11	127-9208	1	Bracket-Lift
12	120-4231	2	Screw-HHF
13	121-0007	4	Bolt-Flange
14	127-9216	2	Ignition Coil ASM
15	81-3250	2	Spark Plug
16	127-9220	4	Tie-Zip
17	127-9219	1	Regulator-Voltage W/Harness
18	120-4216	1	Screw-HHF
19	120-4232	2	Screw-HHF
20	133-1562	1	Pinion-Starter

Crankcase and Crankshaft Assembly

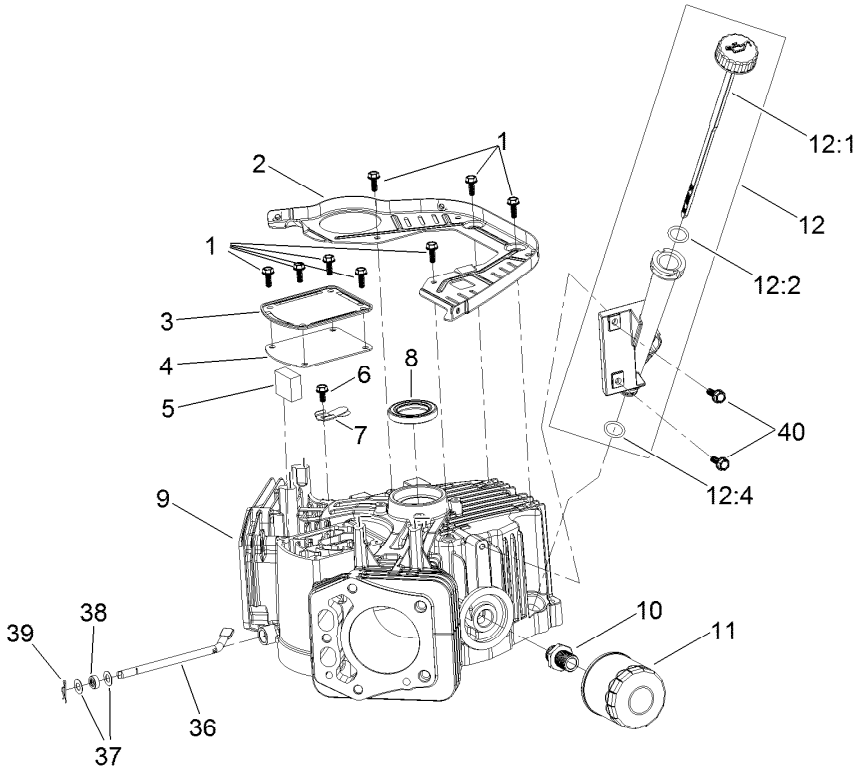

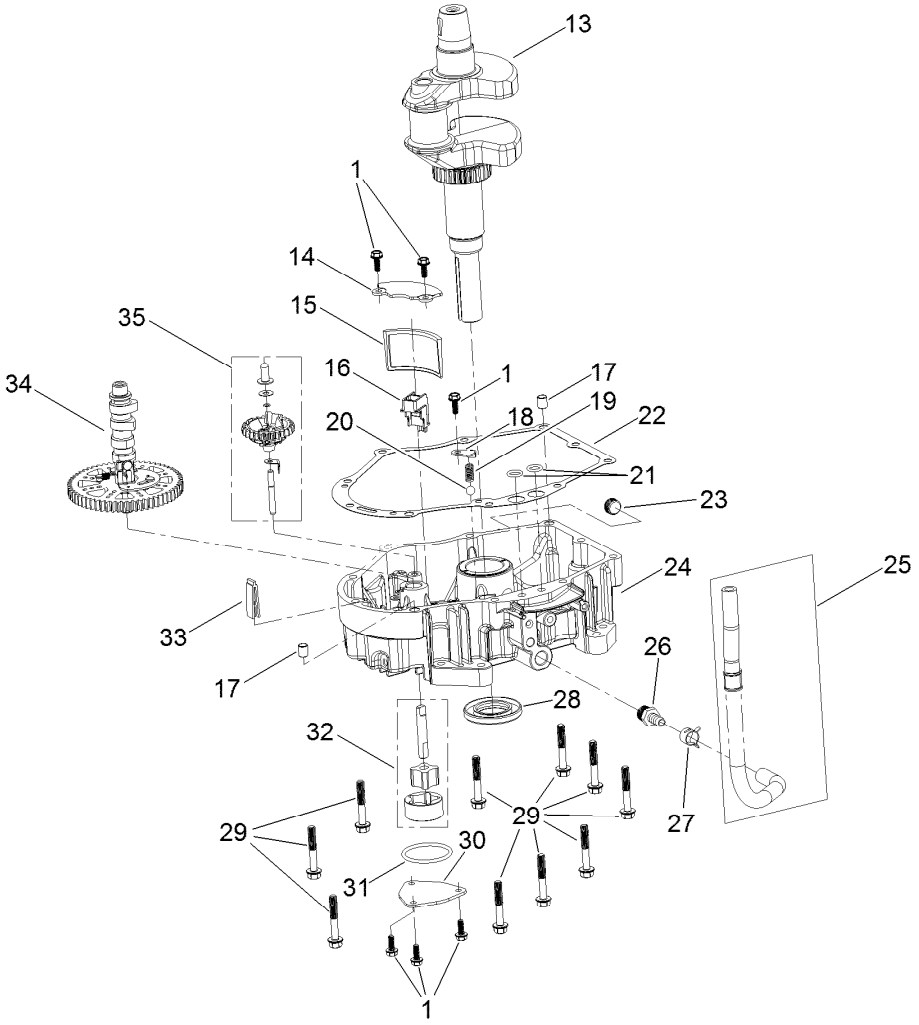

Crankcase and Crankshaft Assembly (continued)

Ref.	Part Number	Qty.	Description
1	120-4232	14	Screw-HHF
2	127-9212	1	Baffle
3	127-9213	1	Cover-Breather
4	127-9214	1	Gasket-Breather
5	127-9215	1	Filter-Breather
6	120-4216	1	Screw-HHF
7	127-9217	1	Valve-Breather
8	120-4267	1	Seal-Oil
9	127-9223	1	Crankcase
10	127-9221	1	Fitting-Threaded, Oil Filter
11	120-4276	1	Filter-Oil
12	127-9218	1	Oil Tube ASM
12:1	127-9283	1	Dipstick
12:2	127-9284	1	O-Ring
12:4	127-9286	1	O-Ring
13	127-9255	1	Crankshaft
14	127-9261	1	Cover-Screen, Oil
15	127-9262	1	Screen-Oil
16	127-9263	1	Retainer-Screen
17	120-4274	2	Pin-Dowel
18	127-9264	1	Plate-Retainer
19	127-9265	1	Spring
20	127-9266	1	Valve-Ball
21	120-4262	2	O-Ring
22	127-9267	1	Gasket-Cover, Crankcase
23	120-4285	1	Plug-Drain
24	127-9268	1	Cover-Crankcase
25	127-9293	1	Oil Drain Hose ASM
26	127-9275	1	Fitting-Hose
27	127-9276	1	Clamp-Hose
28	127-9271	1	Seal
29	121-0473	10	Screw-HHF
30	127-9274	1	Cover-Oil Pump
31	127-9273	1	O-Ring
32	127-9272	1	Oil Pump ASM
33	120-4275	1	Deflector-Oil, Rubber
34	133-1568	1	Camshaft
35	133-1569	1	Governor ASM
36	127-9238	1	Rod-Governor
37	120-4258	2	Washer-Plain
38	120-4257	1	Seal-Oil
39	120-4256	1	Pin-Hair
40	120-4232	2	Screw-HHF

Governor Control Assembly

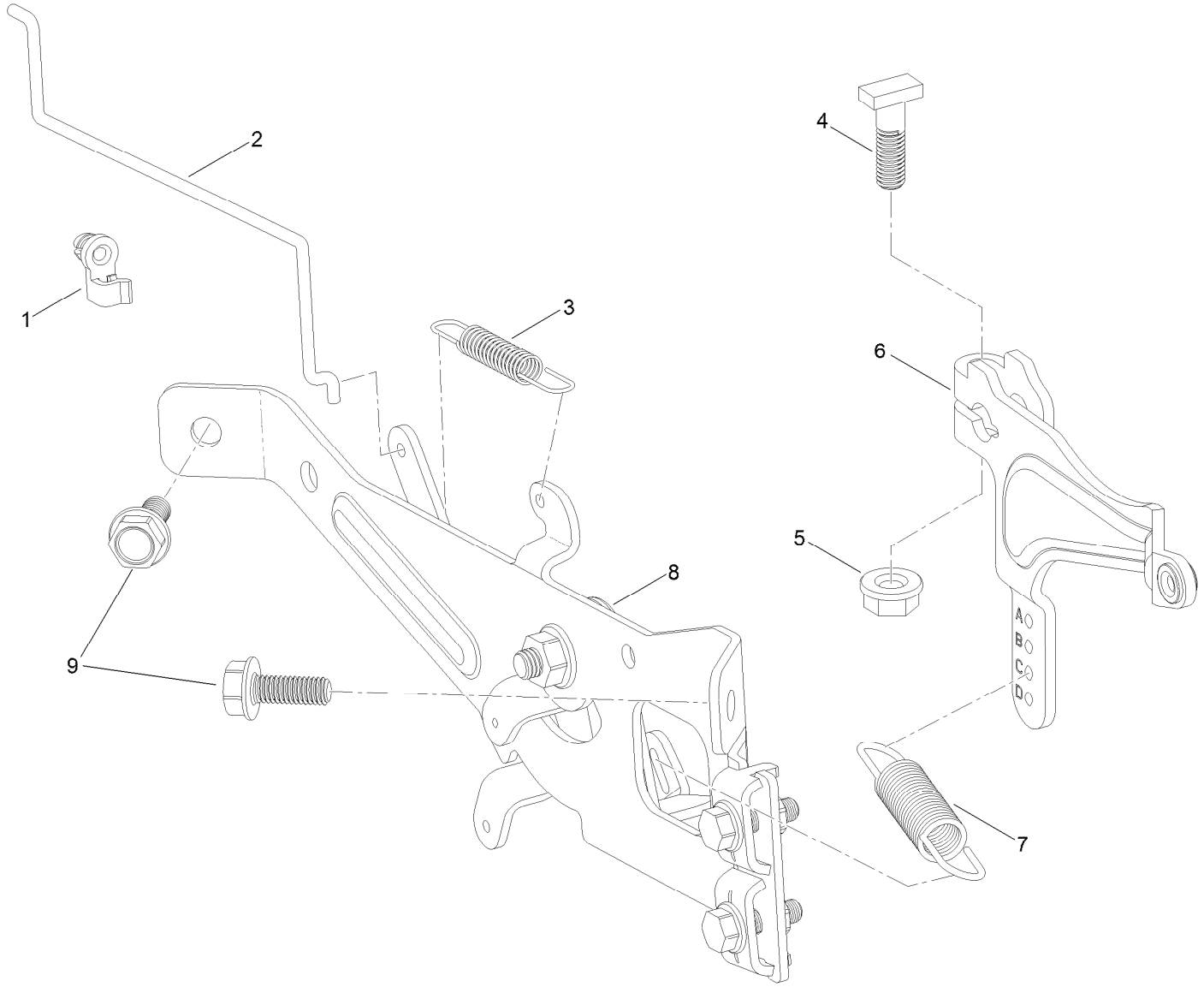

Governor Control Assembly (continued)

Ref.	Part Number	Qty.	Description
1	127-9250	1	Clip-Linkage
2	127-9242	1	Linkage-Choke
3	127-9241	1	Spring-Governor
4	120-4238	1	Bolt-Arm, Governor
5	120-4236	1	Nut-Flange
6	127-9239	1	Arm-Governor
7	127-9240	1	Spring-Governor
8	133-1570	1	Control Plate ASM
9	120-4232	2	Screw-HHF

Piston and Cylinder Head Assembly

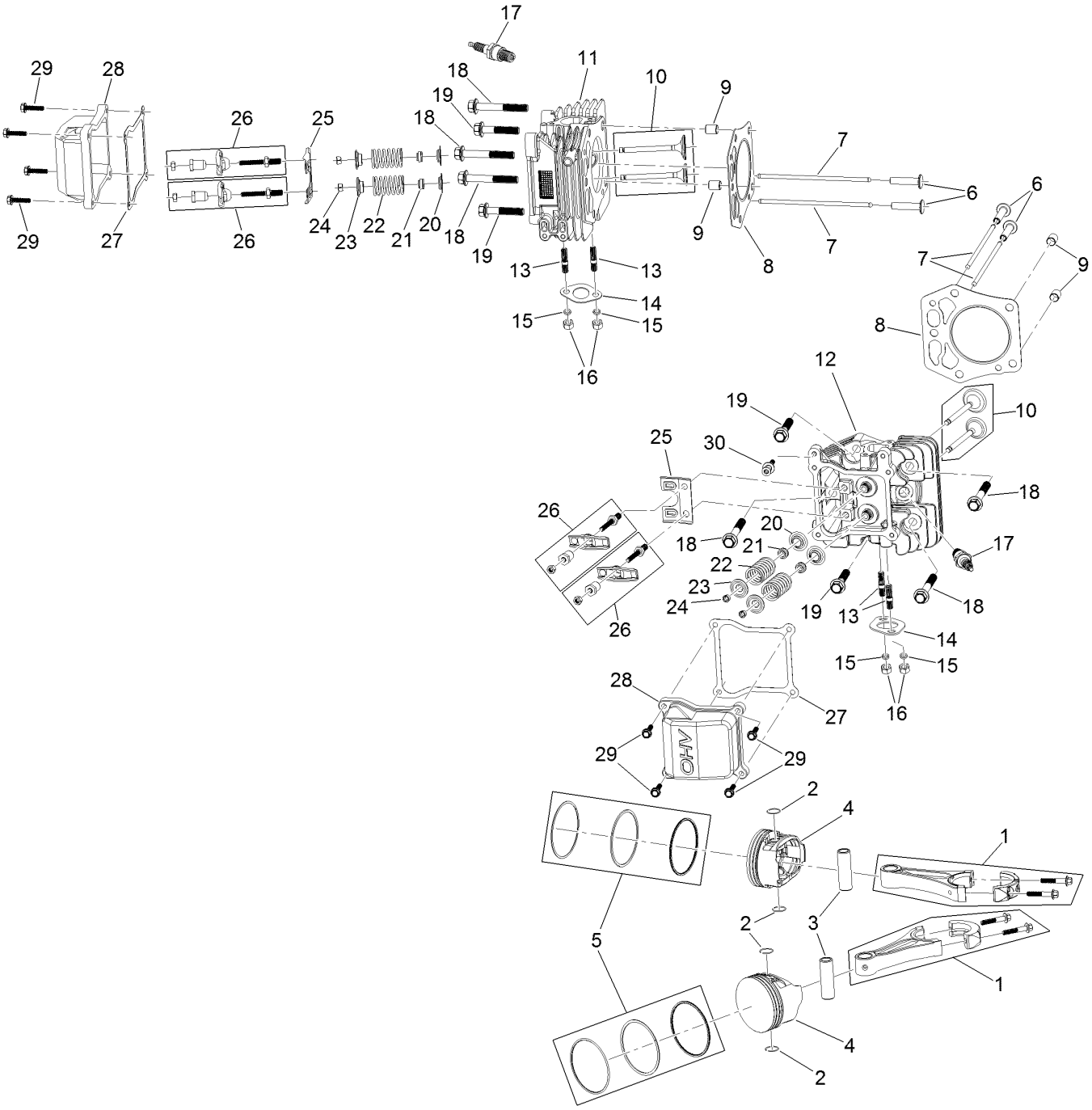

Piston and Cylinder Head Assembly (continued)

Ref.	Part Number	Qty.	Description
1	127-9256	2	Connecting Rod ASM
2	127-9258	4	Clip-Pin, Piston
3	127-9257	2	Pin-Piston
4	127-9259	2	Piston
5	127-9260	2	Piston Ring Set
6	127-9224	4	Lifter-Valve
7	127-9225	4	Rod-Push
8	127-9226	2	Gasket-Head, Cylinder
9	127-9227	4	Pin-Dowel
10	127-9228	2	Valve Set
11	127-9229	1	Head-Cylinder
12	127-9254	1	Head-Cylinder
13	127-9236	4	Stud
14	120-4317	2	Gasket-Exhaust
15	127-9279	4	Washer-Lock, Split
16	121-0199	4	Nut-HH
17	81-3250	2	Spark Plug
18	127-9231	6	Screw-HWH
19	127-9232	4	Screw-HWH
20	120-4303	4	Seat-Spring, Valve
21	120-4304	4	Seal-Stem, Valve
22	120-4305	4	Spring-Valve
23	120-4306	4	Retainer-Spring, Valve
24	120-4307	4	Keeper-Valve
25	127-9233	2	Plate-Guide, Push Rod
26	127-9294	4	Rocker Arm ASM
27	127-9295	2	Gasket-Valve Cover
28	127-9050	2	Cover-Valve
29	120-4225	8	Screw-HHF
30	120-4214	1	Screw-Shoulder, HH

Blower Housing Assembly

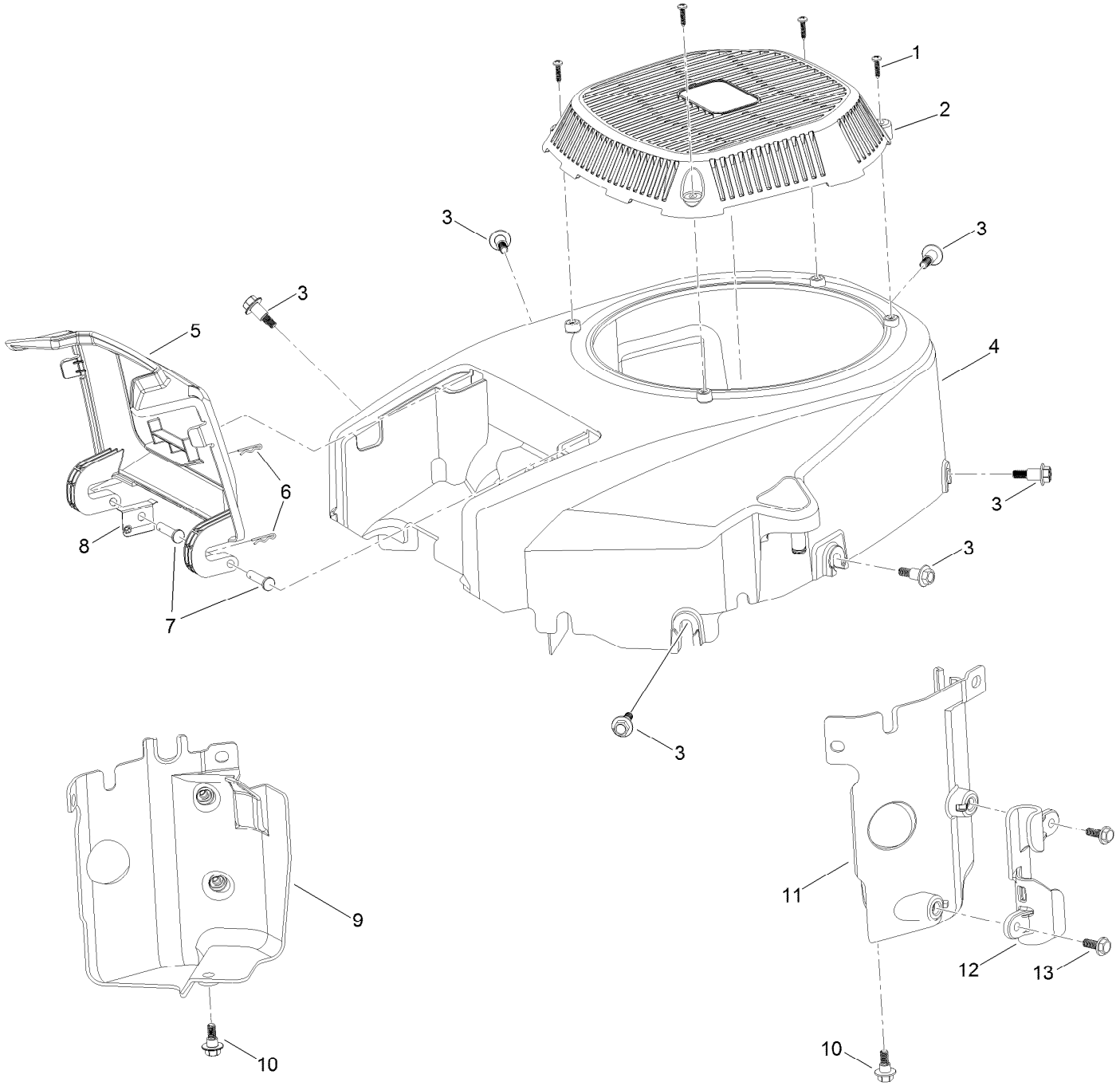

Blower Housing Assembly (continued)

Ref.	Part Number	Qty.	Description
1	133-1571	4	Screw-PPH, Plastic
2	127-9045	1	Cover-Fan
3	127-9196	6	Screw-Shoulder, HWH
4	133-1572	1	Shroud-Engine
5	127-9046	1	Door-Filter, Air
6	127-9280	2	Pin-Hair
7	127-9282	2	Pin
8	127-9281	1	Plate-Spring
9	127-9049	1	Baffle-Air, Left
10	120-4210	2	Screw-Shoulder, HHF
11	127-9048	1	Baffle-Air, Right
12	127-9287	1	Cleat-Hose
13	120-4232	2	Screw-HHF

Gasket and Seal Kit Assembly

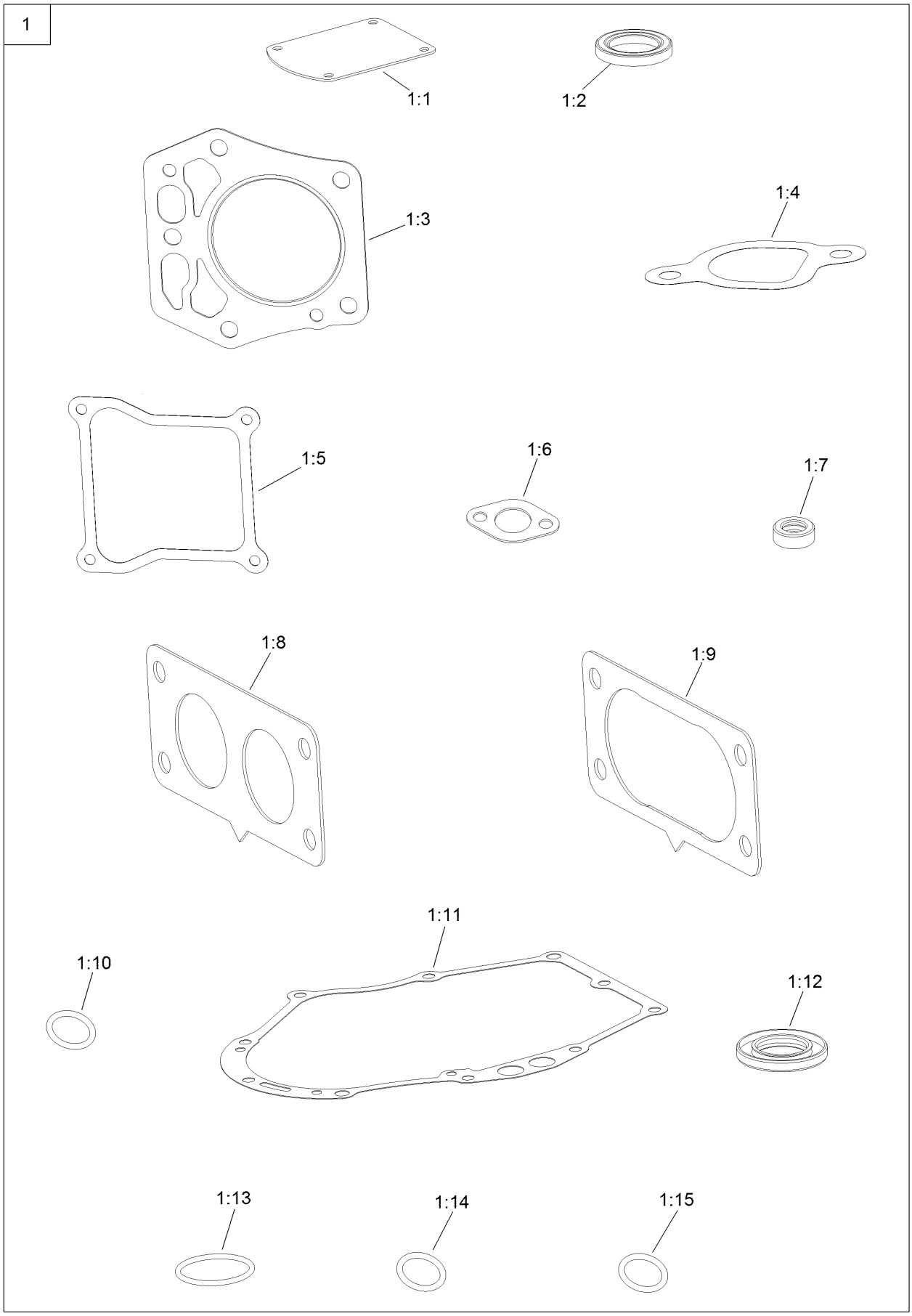

Gasket and Seal Kit Assembly (continued)

Ref.	Part Number	Qty.	Description
1	127-9296	1	Gasket And Seal Kit
1:1	127-9214	1	Gasket-Breather
1:2	120-4267	1	Seal-Oil
1:3	127-9226	2	Gasket-Head, Cylinder
1:4	127-9230	2	Gasket-Intake
1:5	127-9295	2	Gasket-Valve Cover
1:6	120-4317	2	Gasket-Exhaust
1:7	120-4257	1	Seal-Oil
1:8	127-9246	2	Gasket-Carburetor
1:9	127-9251	1	Gasket-Carburetor
1:10	120-4262	2	O-Ring
1:11	127-9267	1	Gasket-Cover, Crankcase
1:12	127-9271	1	Seal
1:13	127-9273	1	O-Ring
1:14	127-9284	1	O-Ring
1:15	127-9286	1	O-Ring

Body Styling and Fuel Tank Assembly

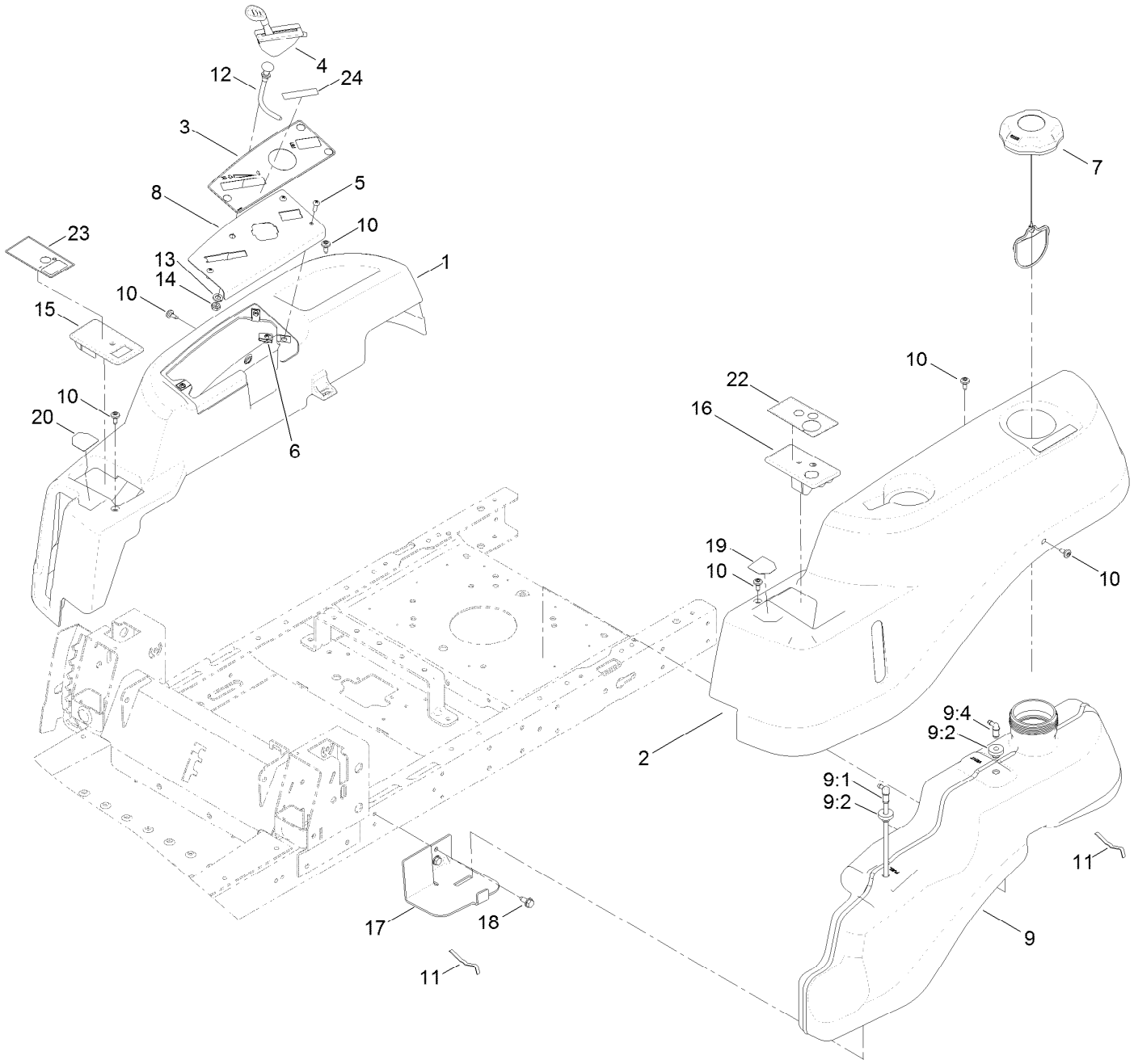

Body Styling and Fuel Tank Assembly (continued)

Ref.	Part Number	Qty.	Description
1	119-3335	1	Pod-RH
2	119-3334	1	Pod-LH
3	121-0772	1	Decal-Panel, Control
4	121-0769	1	Cable-Throttle
5	3258-166	3	Screw-PRH
6	107069	3	Clip
7	120-5461	1	Cap-Fuel, Ratcheting
8	119-3378-03	1	Plate-Control
9	119-3324	1	Fuel Tank ASM
9:1	121-0793	1	Connector-Elbow, 90 DEG
9:2	46-6560	2	Bushing
9:4	117-7400	1	Fitting-Plastic
10	120-7950	8	Screw-Shoulder
11	609830	2	Spring
12	112-9753	1	Cable-Choke
13	3253-21	1	Washer-Lock
14	3220-3	1	Nut-HJ
15	130-7041	1	Cover-RH
16	130-7042	1	Cover-LH
17	119-3476-03	1	Support-Tank, Front
18	32144-70	2	Screw-HWHTF
19	131-3621	1	Decal-Nmir
20	131-3620	1	Decal-Control, Pedal
22	131-3665	1	Decal-Keychoice
23	131-3955	1	Decal-Brake, Parking
24	132-0904	1	Decal-Shutdown

Fuel Delivery Assembly

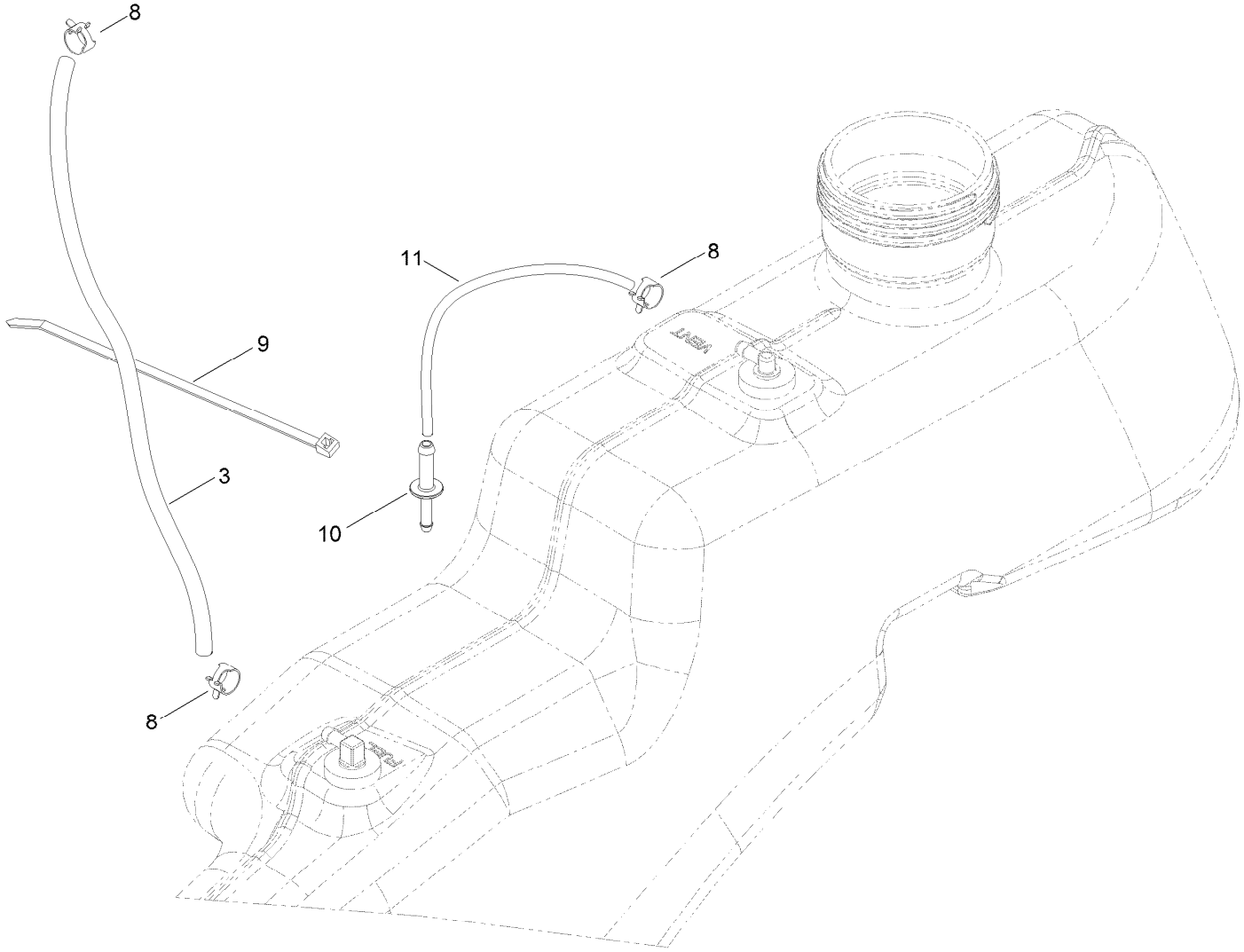

Fuel Delivery Assembly (continued)

Ref.	Part Number	Qty.	Description
3	109-0281	1	Hose-Fuel
8	2412-98	3	Clamp-Hose
9	614249	1	Tie-Cable
10	117-5399	1	Adaptor-Orifice
11	110-1876	1	Hose-Fuel

Battery and Electrical Assembly

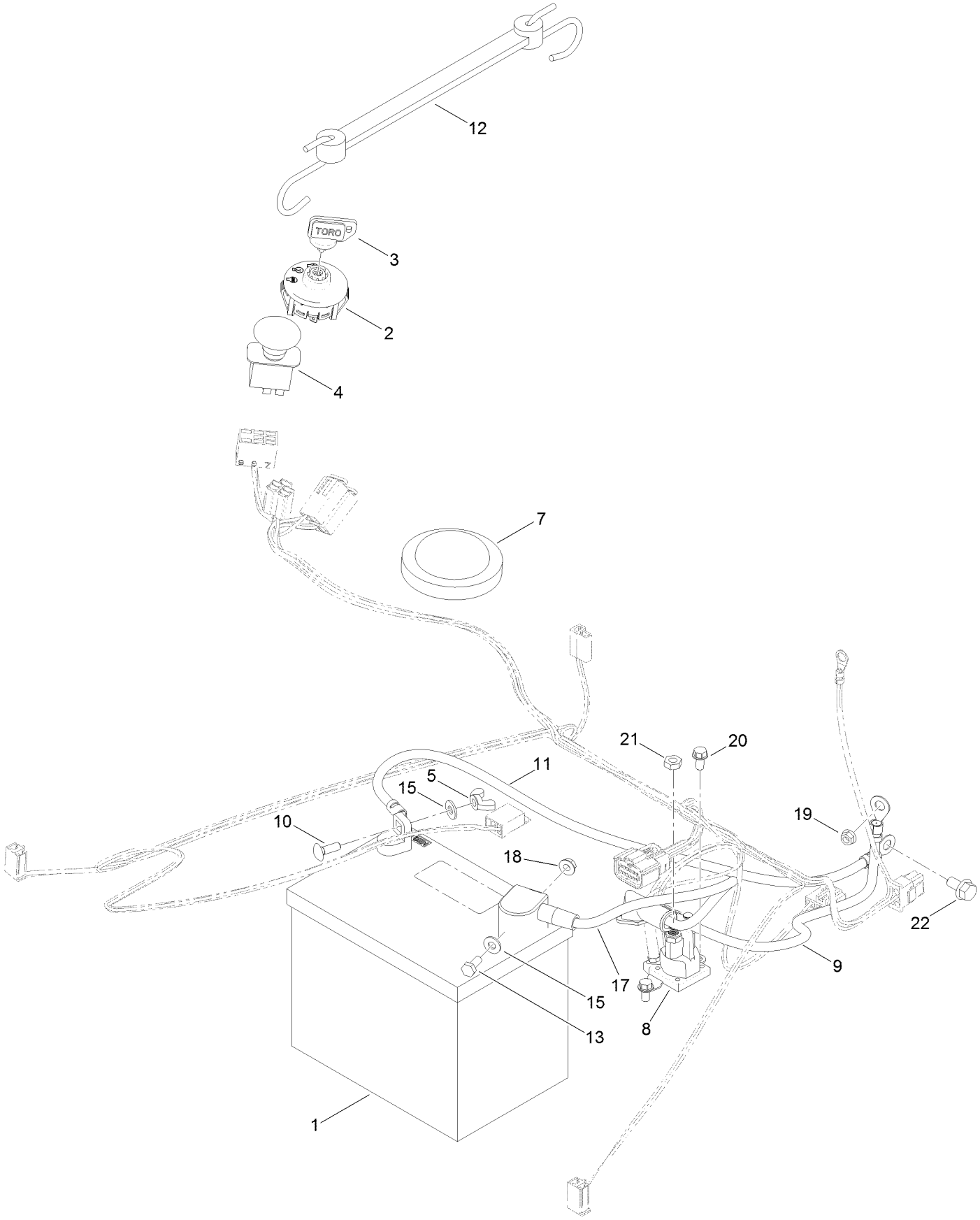

Battery and Electrical Assembly (continued)

Ref.	Part Number	Qty.	Description
1	105-1692	1	Battery
2	117-2221	1	Switch-Ignition
3	63-8360	1	Key-Ignition
4	114-0279	1	Switch-PTO, On-On-(On)
5	32103-22	1	Nut-Wing
7	100-3524	1	Switch-Seat
8	117-1197	1	Solenoid
9	121-0711	1	Cable-Battery, Positive
10	3229-1	1	Bolt-CARR
11	119-8899	1	Cable-Battery, Black
12	104-2466	1	Holddown-Battery
13	321-3	1	Screw-HH
15	3256-22	2	Washer-Flat
17	119-8897	1	Cable-Battery, Red
18	32128-33	1	Nut-HF
19	33003-00	1	Nut-HF
20	32144-4	2	Screw-HWH
21	3220-2	2	Nut-Jam
22	3234-14	1	Screw-HHF

Wire Harness Assembly

Wire Harness Assembly (continued)

Ref.	Part Number	Qty.	Description
1	131-3639	1	Key-Toro
2	132-9361	1	Harness-Wire
2:1	109103	1	Fuse-Blade, 30 Amp
2:2	109102	1	Fuse-Blade, 25 Amp
3	130-6874	1	Switch-Rocker, (On)-Off-(On)
4	119-3068	1	Switch-Momentary, N.O.
5	131-4136	1	Light-Indicator

42 Inch Deck Assembly

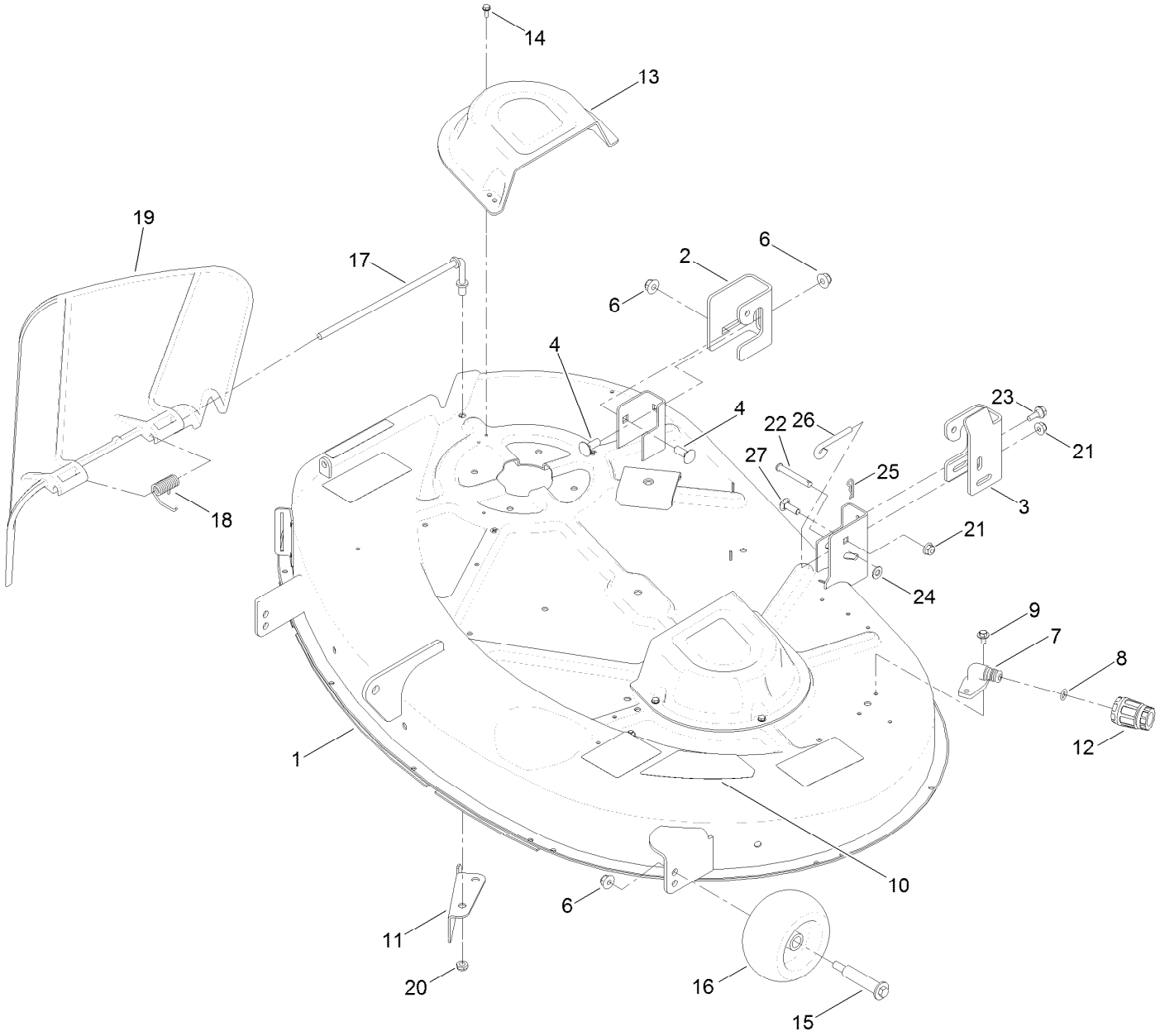

42 Inch Deck Assembly (continued)

Ref.	Part Number	Qty.	Description
1	131-3604	1	42 Inch Deck And Decal ASM
2	131-4138	1	Bracket-Hanger, RH
3	131-1091	1	Bracket-Hanger, LH
4	3231-2	2	Bolt-CARR
6	104-8301	4	Nut-HF, NI
7	95-2747	1	Fitting-Washout
8	46-6290	1	O-Ring
9	46-8560	2	Screw-HHFTF
10	117-1222	1	Decal
11	112-3983-03	1	Baffle-Cutoff
12	95-3270	1	Connector-Hose
13	108-7889	2	Cover-Belt
14	32144-1	6	Screw-Taptite
15	112-3977	2	Bolt-Shoulder
16	1-603299	2	Roller-Scalp, Anti
17	112-4026	1	Rod-Pivot
18	110-6694	1	Spring-Torsion
19	112-3951	1	Deflector
20	3296-59	1	Nut-Lock, NI
21	104-8300	2	Nut-HF, NI
22	110-0618	1	Pin-Clevis
23	120-7024	1	Screw-Shoulder, HHF
24	3256-23	1	Washer-Plain
25	1-806003	1	Pin-Cotter
26	131-0955	1	Rod-Level, Deck
27	3230-22	1	Screw-CARR

42 Inch Deck Decal Assembly No. 131-3604

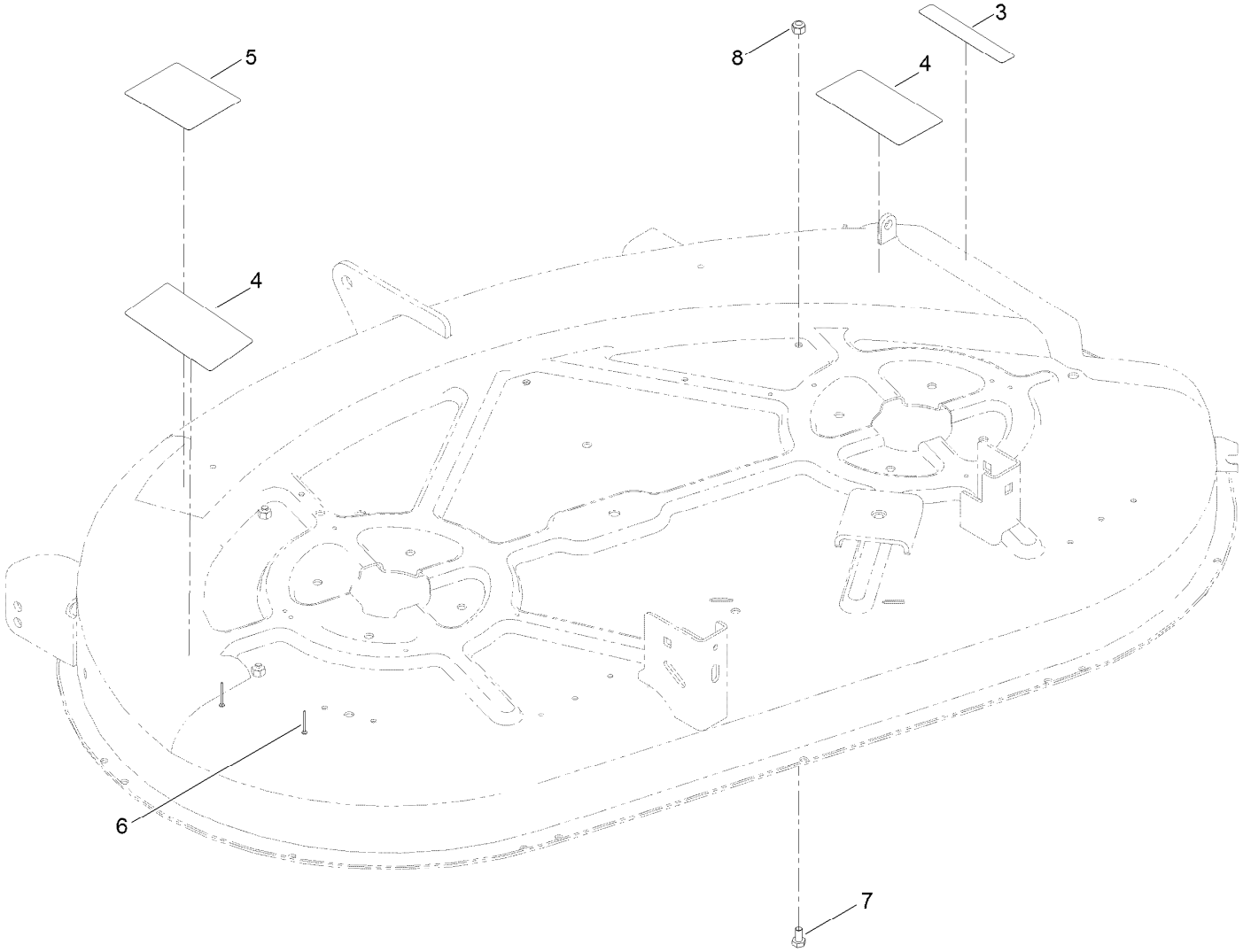

42 Inch Deck Decal Assembly No. 131-3604 (continued)

Ref.	Part Number	Qty.	Description
3	93-7009	1	Decal-Danger
4	132-0872	2	Decal-Danger, Deck
5	105-7015	1	Decal-Routing, Belt
6	3290-282	2	Rivet-Blind
7	321-2	3	Screw-HH
8	3296-42	3	Nut-Lock, NI

42 Inch Deck, Belt and Blade Assembly

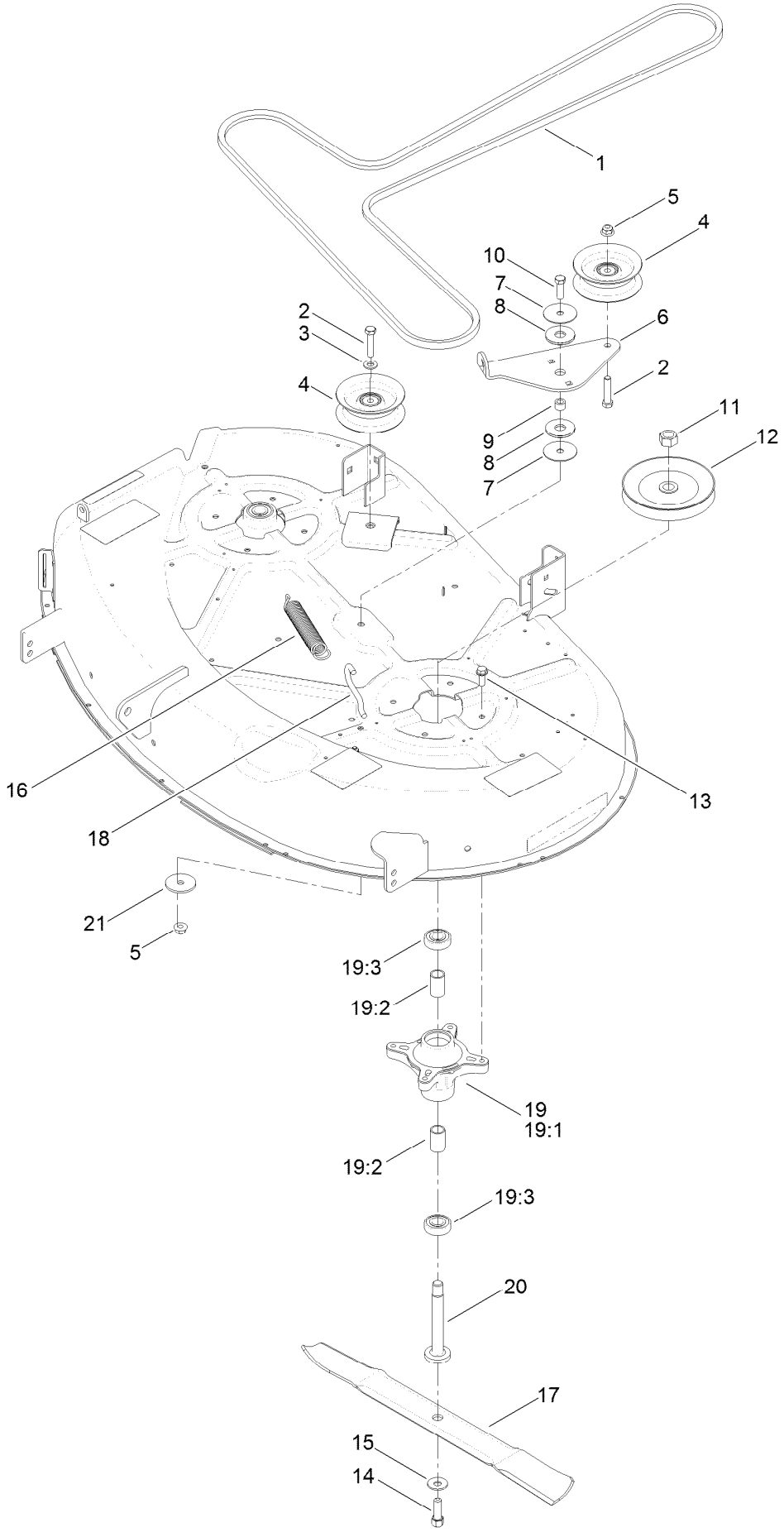

42 Inch Deck, Belt and Blade Assembly (continued)

Ref.	Part Number	Qty.	Description
1	119-8819	1	V-Belt
2	323-9	2	Screw-HH
3	3256-24	1	Washer-Flat
4	106-2175	2	Pulley-Idler, Flat
5	104-8301	2	Nut-HF, NI
6	114-8540	1	Arm-Idler
7	120-2229	2	Washer
8	114-0463	2	Washer-Friction, Composite
9	115-4986	1	Spacer
10	323-7	1	Screw-HH
11	3219-6	2	Nut-Hex
12	125-5574	2	Pulley

Ref.	Part Number	Qty.	Description
13	32144-41	8	Screw-Taptite
14	26-0671	2	Screw-HH
15	3290-465	2	Washer-Belleville
16	106-2177	1	Spring-Extension
17	131-3939-03	2	Blade-High Lift
18	88-5970	1	Hook-Return, Spring
19	121-0751	2	Spindle ASM
19:1	117-7267	1	Spindle
19:2	120-7935	2	Spacer
19:3	38-7820	2	Bearing-Ball
20	117-7268	2	Shaft-Spindle
21	63-7400	1	Washer-Rebound

Attachments and Accessories

For 74784 TimeCutter SW 4200 Riding Mower

Product Name	Model/Part
42in Blowout Ring Kit	114-1620
Hourmeter Kit	116-5461
All Season Synthetic Oil	117-0066
Fuel Stabilizer (4oz)	117-0089
Fuel Stabilizer (16oz)	117-0090
Seat With Armrests-18in	119-8830
Striping Kit	120-7905
Jack Mount Kit	126-5251
Jack Kit	127-6666
Replacement Blade Kit	131-3939-03P
Attachment Mount Kit	131-3966
42in Recycler Kit	131-4182
Deluxe Seat Kit	131-7699
Floor Mat Kit	132-6920
HD Air Cleaner Kit	136-7860
10w30 4-cycle Engine Oil (32oz Bottle)	38280
Toro 4-cycle SAE 30 Oil (32oz Bottle)	38903
Storage Cover	490-7516
Sunshade Kit	79011
Cargo Carrier	79040
42in Bagger	79391

Notes:

Notes:

Notes:

TORO®

Count on it.