Form No. 3410-299 Rev E

TORO®

Count on it.

Parts Catalog

TimeCutter® HD MR6000

Riding Mower

Model No. 75213—Serial No. 400000000 and Up

Register at www.Toro.com.
Original Instructions (EN)

3410-299 E

Ordering Replacement Parts

To order replacement parts, please supply the part number, the quantity, and the description of each part desired.

Understanding Reference Numbers

Each identified part in an illustration has a reference number. The reference number for a part also appears in the parts list, along with other information about the part.

This catalog uses two special reference number formats, one to indicate parts in a service assembly and another to indicate the quantity of a given part in an illustration.

Service Assembly Reference Numbers

Parts in service assemblies have reference numbers in the form a:b. The a represents the reference number of the entire service assembly and the b represents a sequential number unique to each part within the service assembly.

For example, a wheel assembly might be identified by reference number 6, the tire by 6:1, the valve by 6:2, and the wheel by 6:3. When you order the assembly identified by reference number 6, you receive all parts identified by reference numbers 6:1,6:2, and 6:3. However, you may also order any part individually. Reference numbers of this type appear in illustration and in parts lists.

Reference Numbers Indicating Quantity

In an illustration, if a reference number indicates more than one part, the reference number has the form nX y. The n represents the quantity of the part, the X is the multiplication symbol, and the y represents the reference number.

For example, in an illustration, the reference number 2X 37 means that two of the parts identified by reference number 37 are indicated.

Contents

Frame Assembly 4
Deck Lift Assembly 6
Caster Fork Assembly 8
Hydro Transmission Assembly 10
LH Transaxle Assembly No. 133-4420 12
RH Transaxle Assembly No. 133-4421 14
Parking Brake Assembly 16
Rear Tire and Wheel Assembly 18
Seat Assembly 20
Seat Assembly No. 137-5007 22
Motion Control Assembly 24
Engine and Muffler Assembly 26
Fuel System Assembly with Non-Canister Style Air Filter 28
Carburetor Assembly with Non-Canister Style Air Filter 30
Air Intake and Filtration Assembly with Non-Canister Style Air Filter 32
Ignition and Electrical Assembly 34
Crankcase and Crankshaft Assembly 36
Governor Control Assembly 38
Piston and Cylinder Head Assembly 40
Blower Housing Assembly 42
Gasket and Seal Kit 44
Body Styling and Fuel Tank Assembly 46
Fuel Tank Assembly No. 133-4484 48
Electrical Assembly 50
Deck Assembly 52
Model Specific Decal Assembly 54
Series Decal Assembly 56
Clutch Assembly 58
Attachments and Accessories 60

© 2018—The Toro® Company
8111 Lyndale Avenue South
Bloomington, MN 55420

Contact us at www.Toro.com.
Printed in the USA.
All Rights Reserved

Frame Assembly

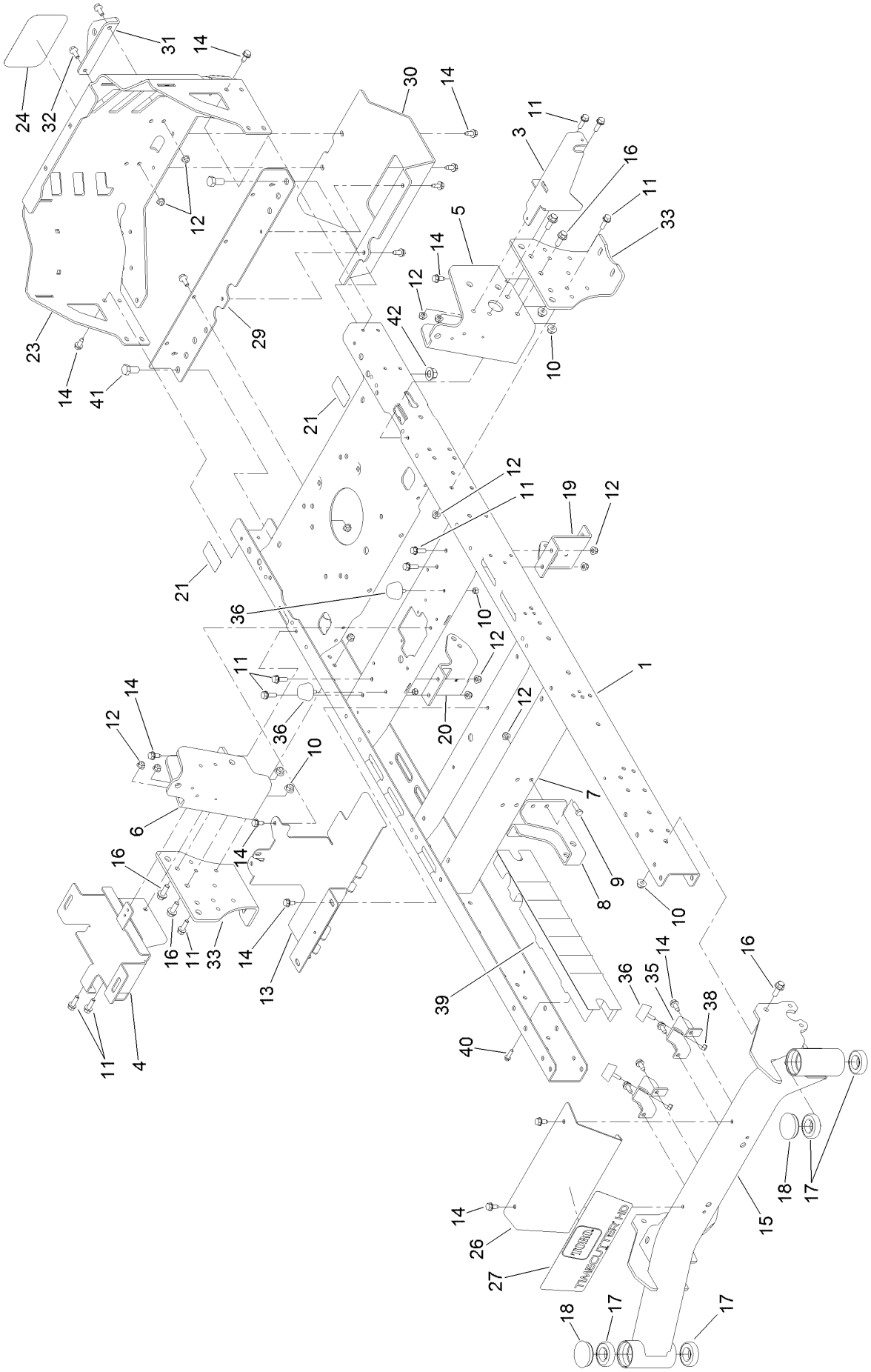

Frame Assembly (continued)

Ref.	Part Number	Qty.	Description
1	133-1192-01	1	Frame ASM
3	133-7051-03	1	Bracket-Support, Pod (LH)
4	136-4185-03	1	Tray-Battery
5	133-4383-01	1	Bracket-Mounting, LH
6	133-4384-01	1	Bracket-Mounting, RH
7	133-4413-01	1	Brace-Cross, Lower
8	133-4435-01	1	Bracket-Mount Damper, Lower
9	322-5	4	Screw-HH
10	104-8301	10	Nut-HF, NI
11	3234-29	20	Screw-HHF
12	104-8300	30	Nut-HF, NI
13	133-4485-03	1	Bracket-Mount
14	32144-70	26	Screw-HWHTF
15	133-4310-01	1	Axle-Front
16	3234-42	10	Screw-HHF
17	109-3678	4	Bearing-Ball
18	116-4348	2	Cap-Grease
19	131-0902-01	1	Mount-Hydro, Front (LH)
20	131-0901-01	1	Mount-Hydro, Front (RH)
21	121-2989	2	Decal-Bypass
23	133-4431-03	1	Guard-Engine
24	99-4693	1	Decal
26	133-9345-01	1	Plate-Front
27	136-7472	1	Decal-Timecutter HD
29	133-4303-01	1	Crossmember-Rear
30	133-4429-03	1	Guard-Muffler
31	117-1232-03	1	Bracket-Hitch
32	3234-47	6	Screw-HHF
33	133-1201-03	2	Mount-Hydro
35	133-4414-01	2	Bracket-Stop, Bump
36	131-8834	4	Bumper
38	3296-42	4	Nut-Lock, NI
39	133-7072	2	Guard-Rail
40	46-8091	6	Screw-HWH
41	325-4	2	Screw-HH
42	99-5107	2	Nut-Lock

Deck Lift Assembly

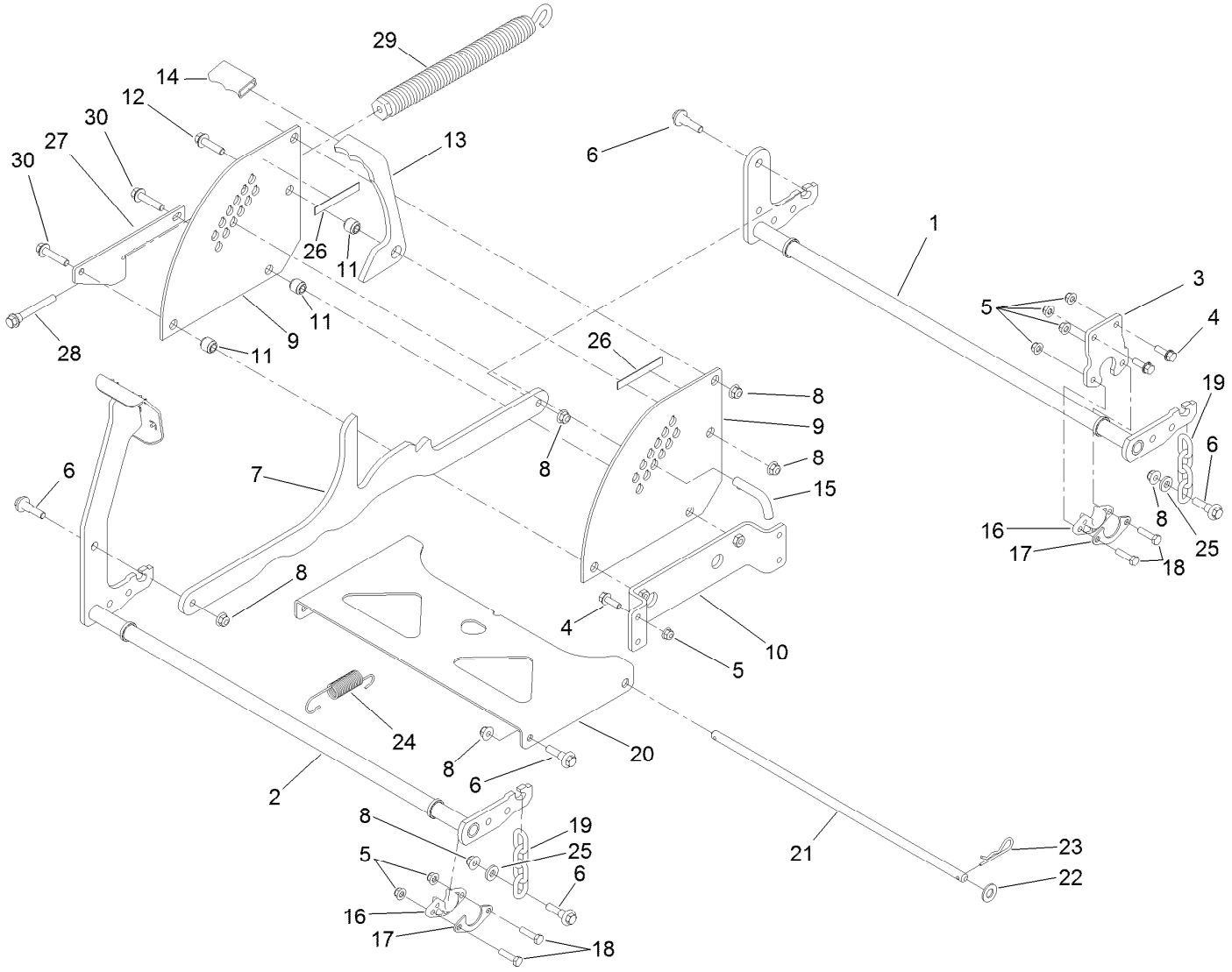

Deck Lift Assembly (continued)

Ref.	Part Number	Qty.	Description
1	131-4059-03	1	Pivot-Rear
2	133-4430-03	1	Pivot-Front
3	133-4316-03	2	Plate
4	3234-29	8	Screw-HHF
5	104-8300	16	Nut-HF, NI
6	130-0742	9	Bolt-Shoulder
7	127-3390-03	1	Link-HOC
8	104-8301	11	Nut-HF, NI
9	127-3389-03	2	Plate-Deck, Lift
10	133-7049	1	Plate-Lift
11	116-4313	4	Spacer-Step, Double
12	114-4681	2	Screw-HHF
13	127-3391	1	Lock-Transport, HOC
14	116-4312	1	Grip-Flat
15	116-5584	1	Pin-HOC
16	115-5065	4	Bushing-Flange
17	116-2887	4	Gusset-Lift, Deck
18	322-6	8	Screw-HH
19	130-0668	4	Chain-Decklift
20	133-4311-01	1	Pan-Pivot, Deck
21	133-7071	1	Rod-Pivot, Deck
22	3256-26	2	Washer-Flat
23	1-806005	2	Pin-Cotter
24	115-9652	1	Spring-Extension
25	43-0940	4	Spacer
26	130-0734	2	Pad-Rubber
27	132-0945-03	1	Support-Spring
28	92-7674	1	Bolt-Shoulder
29	116-0886	1	Spring-Extension
30	3234-19	2	Screw-HHF

Caster Fork Assembly

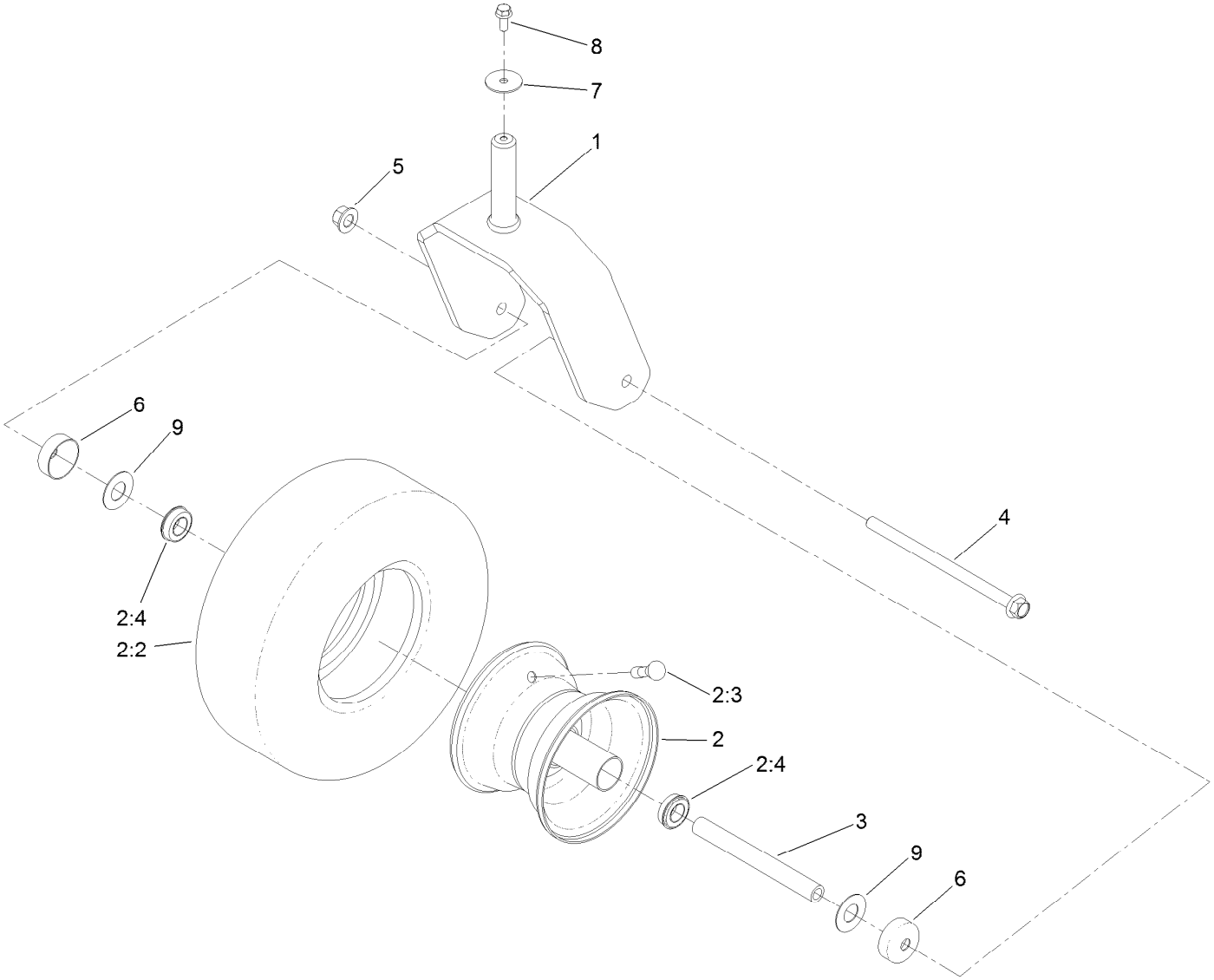

Caster Fork Assembly (continued)

Ref.	Part Number	Qty.	Description
1	126-4312-01	2	Fork-Caster
2	133-4428	2	Tire And Wheel ASM
2:2	125-5581	1	Tire
2:3	232-27	1	Stem-Valve
2:4	136-4190	2	Bearing
2:99	232-46	1	Tube-Inner ●■
3	133-4487	2	Spanner-Wheel
4	126-5389	2	Screw-HHF
5	99-5107	2	Nut-Lock
6	133-7088	4	Guard-Seal
7	3256-68	2	Washer-Flat
8	3234-47	2	Screw-HHF
9	136-5590	4	Washer

● Not illustrated

■ Optional Equipment

Hydro Transmission Assembly

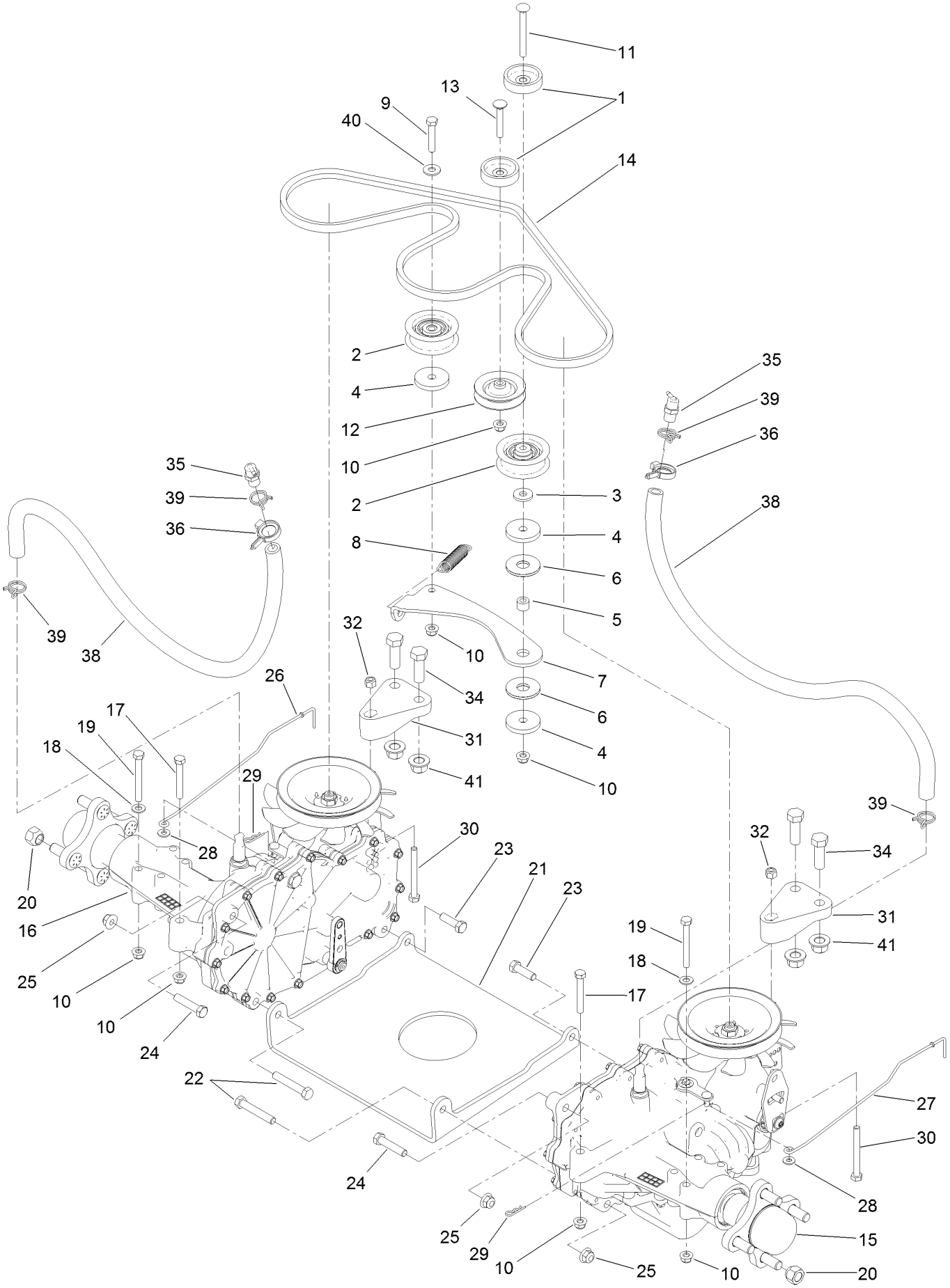

Hydro Transmission Assembly (continued)

Ref.	Part Number	Qty.	Description
1	119-3353	2	Spacer
2	106-2176	2	Pulley-Idler
3	5-0838	1	Washer
4	110-9981	3	Washer-Plain
5	114-8549	1	Bushing
6	114-0463	2	Washer-Friction, Composite
7	133-4423	1	Arm-Idler
8	104-6415	1	Spring-Return, Pedal
9	322-9	1	Screw-HH
10	104-8300	9	Nut-HF, NI
11	119-9784	1	Screw-CARR
12	119-8822	1	Pulley-Idler
13	3230-6	1	Screw-CARR
14	133-4371	1	V-Belt
15	133-4420	1	LH Hydro Transmission ASM
16	133-4421	1	RH Hydro Transmission ASM
17	322-11	2	Screw-HH
18	3256-23	6	Washer-Plain
19	322-13	4	Screw-HH
20	242-50	8	Nut-Lug
21	130-0718-01	1	Plate-Cross, Hydro
22	323-11	2	Screw-HH
23	323-7	2	Screw-HH
24	323-9	2	Screw-HH
25	104-8301	6	Nut-HF, NI
26	133-4304	1	Rod Bypass, RH
27	133-4305	1	Rod Bypass, LH
28	3256-22	2	Washer-Flat
29	3290-307	2	Pin-Cotter
30	322-14	2	Screw-HH
31	133-1247	2	Support-Hydro, Rear
32	3296-29	2	Nut-Lock, NI
34	325-6	4	Screw-HH
35	136-4183	2	Breather Kit
36	105-1853	2	Clamp-Hose
38	136-4182	2	Hose-Hydro
39	117-1193	4	Clamp-Hose
40	3256-3	1	Washer-Flat
41	99-5107	4	Nut-Lock

LH Transaxle Assembly No. 133-4420

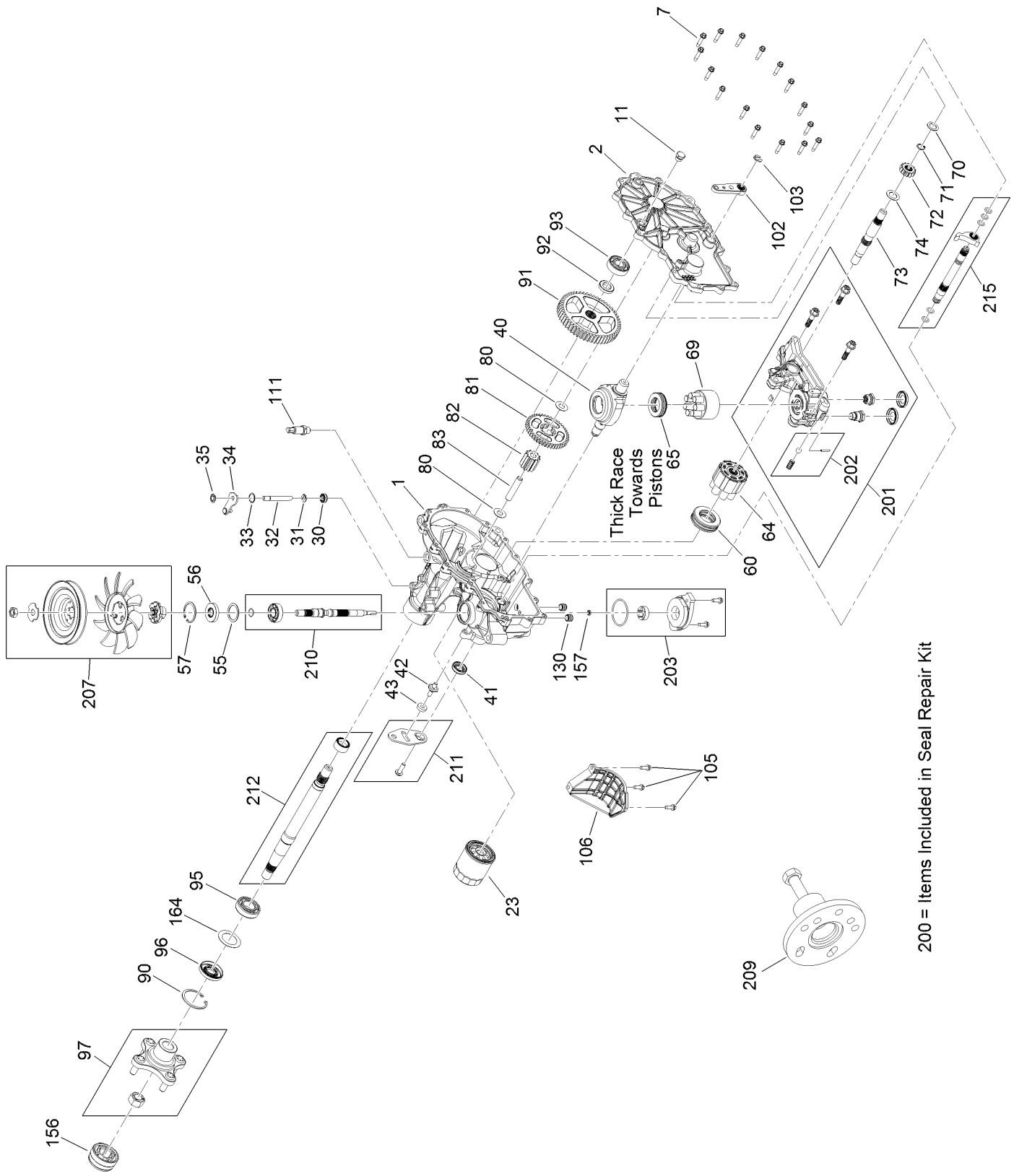

LH Transaxle Assembly No. 133-4420 (continued)

Ref.	Part Number	Qty.	Description
1	117-5357	1	RH Main Housing Kit
2	117-5358	1	RH Housing Side Kit
7	117-5359	16	Screw-HHF
11	135-1140	1	Plug-Straight
23	109-3321	1	Element-Oil Filter, HYD
30	106-8676	1	Seal-Lip
31	106-8677	1	Ring-Retaining, External
32	114-1685	1	Rod-Bypass
33	106-8679	1	Ring-Retaining, Internal
34	112-9852	1	Arm-Bypass
35	106-8681	1	Ring-Retaining, External
40	104-5304	1	Swashplate-Trunnion
41	104-5313	1	Seal-Lip
42	104-2116	1	Stud
43	112-9853	1	Puck-Friction
55	104-5308	1	Spacer
56	104-5310	1	Seal-Lip
57	104-5309	1	Ring-Retaining
60	112-4154	1	Bearing-Thrust
64	114-1689	1	Motor Cylinder Block Kit
65	94-6922	1	Bearing-Thrust
69	110-8561	1	Pump Block ASM
70	104-5339	1	Washer-Flat
71	104-5340	1	Ring-Retaining
72	131-0905	1	Gear-14T
73	114-1691	1	Shaft-Motor
74	104-5360	1	Washer
80	119-5541	2	Washer
81	114-1692	1	Gear-45T
82	120-7974	1	Gear-11T
83	104-5329	1	Pin-Jackshaft
90	104-2169	1	Ring-Retaining
91	114-1694	1	Gear-54T
92	120-7975	1	Spacer
93	137-2004	1	Bearing Kit
95	109-8110	1	Input Bearing Kit
96	130-8478	1	Seal-Lip
97	109-5939	1	Hub Kit
102	125-0021	1	Handle-Brake
103	131-0906	1	Ring-Retaining, EXT
105	104-2120	3	Screw
106	120-7981	1	Guard-Filter, RH
111	109-3278	1	Adapter-Straight
130	126-3251	2	Tube-Charge
156	115-5057	1	Cover-Nut, Axle
157	130-8486	1	Seal-Gerotor
164	121-5745	1	Spacer
200	109-3537	1	Seal Kit
201	137-2005	1	RH Charge Center Section Kit
202	114-8464	1	Charge Relief Kit
203	114-8465	1	Charge Kit
207	137-2006	1	Fan Pulley Kit
209	114-8467	1	Puller-Hub, 4 Bolt
210	117-5361	1	Input Shaft Kit
211	117-5362	1	Control Arm Kit
212	114-8470	1	Axle Shaft Kit
215	137-2007	1	Brake Shaft Kit

RH Transaxle Assembly No. 133-4421

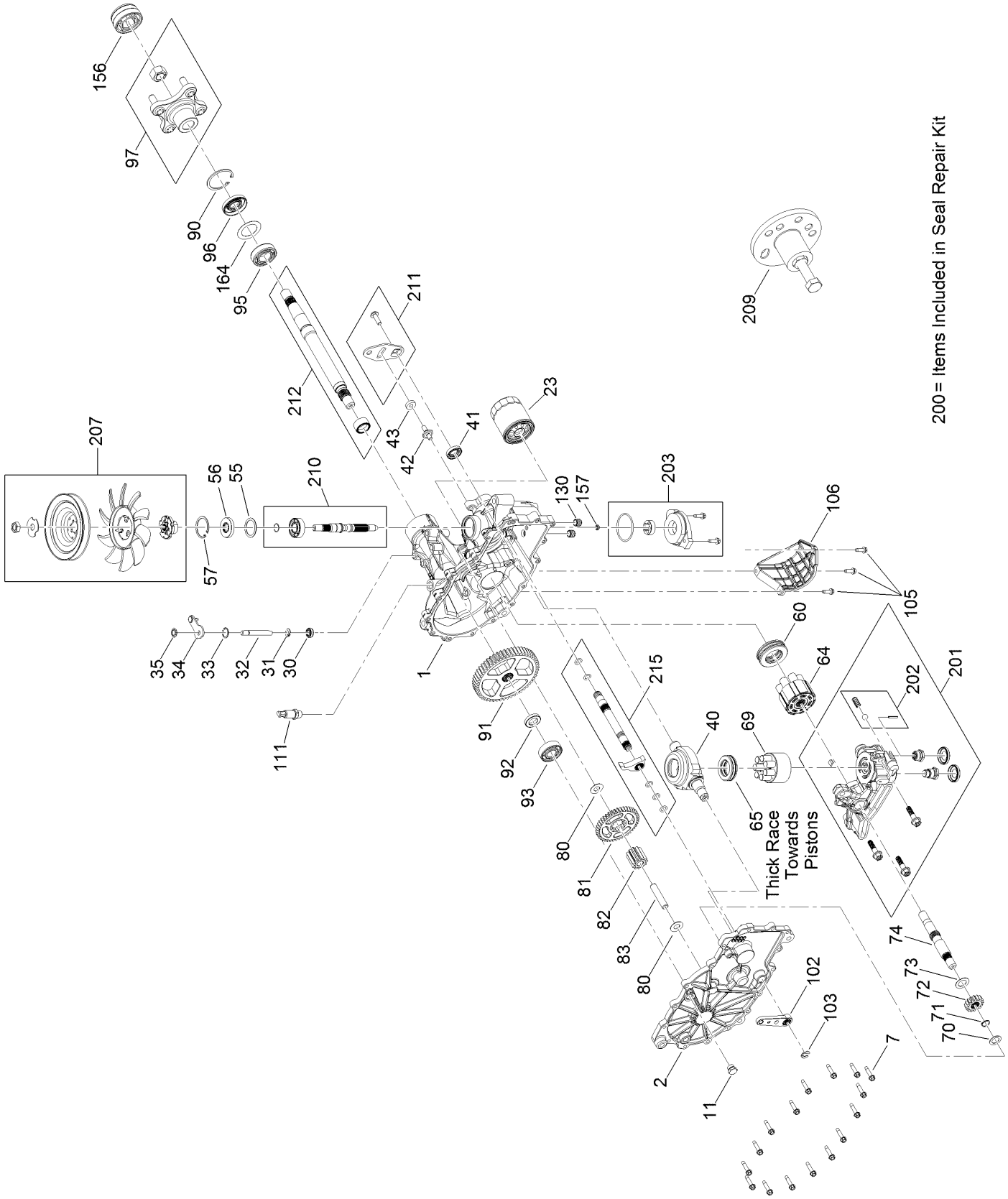

RH Transaxle Assembly No. 133-4421 (continued)

Ref.	Part Number	Qty.	Description
1	114-8471	1	LH Main Housing Kit
2	114-8472	1	LH Side Cover Kit
7	117-5359	16	Screw-HHF
11	135-1140	1	Plug-Straight
23	109-3321	1	Element-Oil Filter, HYD
30	106-8676	1	Seal-Lip
31	106-8677	1	Ring-Retaining, External
32	114-1685	1	Rod-Bypass
33	106-8679	1	Ring-Retaining, Internal
34	107-2490	1	Arm-Bypass
35	106-8681	1	Ring-Retaining, External
40	104-5304	1	Swashplate-Trunnion
41	104-5313	1	Seal-Lip
42	104-2116	1	Stud
43	112-9853	1	Puck-Friction
55	104-5308	1	Spacer
56	104-5310	1	Seal-Lip
57	104-5309	1	Ring-Retaining
60	112-4154	1	Bearing-Thrust
64	114-1689	1	Motor Cylinder Block Kit
65	94-6922	1	Bearing-Thrust
69	110-8561	1	Pump Block ASM
70	104-5339	1	Washer-Flat
71	104-5340	1	Ring-Retaining
72	131-0905	1	Gear-14T
73	114-1691	1	Shaft-Motor
74	104-5360	1	Washer
80	119-5541	2	Washer
81	114-1692	1	Gear-45T
82	120-7974	1	Gear-11T
83	104-5329	1	Pin-Jackshaft
90	104-2169	1	Ring-Retaining
91	114-1694	1	Gear-54T
92	120-7975	1	Spacer
93	137-2004	1	Bearing Kit
95	109-8110	1	Input Bearing Kit
96	130-8478	1	Seal-Lip
97	109-5939	1	Hub Kit
102	125-0021	1	Handle-Brake
103	131-0906	1	Ring-Retaining, EXT
105	104-2120	3	Screw
106	120-7979	1	Guard-Filter, LH
111	109-3278	1	Adapter-Straight
130	126-3251	2	Tube-Charge
156	115-5057	1	Cover-Nut, Axle
157	130-8486	1	Seal-Gerotor
164	121-5745	1	Spacer
200	109-3537	1	Seal Kit
201	137-2012	1	LH Charge Center Section Kit
202	114-8464	1	Charge Relief Kit
203	114-8465	1	Charge Kit
207	137-2006	1	Fan Pulley Kit
209	114-8467	1	Puller-Hub, 4 Bolt
210	117-5361	1	Input Shaft Kit
211	117-5362	1	Control Arm Kit
212	114-8470	1	Axle Shaft Kit
215	137-2013	1	Brake Shaft Kit

Parking Brake Assembly

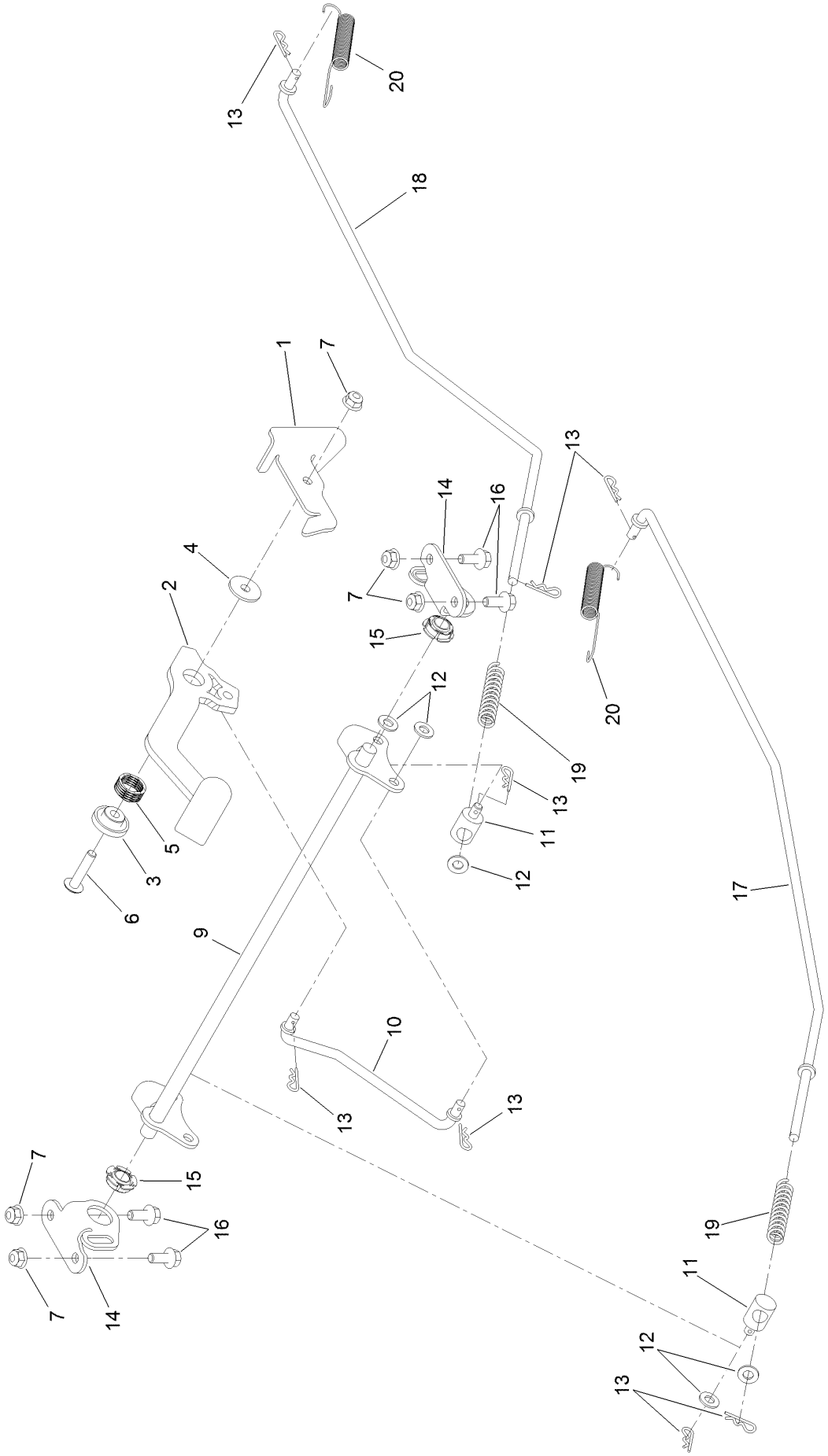

Parking Brake Assembly (continued)

Ref.	Part Number	Qty.	Description
1	136-5554	1	Detent-Brake
2	136-7476	1	Lever-Brake
3	136-5648	1	Bushing-Flange
4	136-5647	1	Bushing-Brake, Flanged
5	126-8220	1	Spring-Wave
6	126-7439	1	Screw-Torx
7	104-8300	5	Nut-HF, NI
9	133-9338	1	Bellcrank-Brake
10	133-9342	1	Rod-Brake, Intermediate
11	115-9681	2	Fitting-Rod
12	3256-23	5	Washer-Plain
13	3290-307	8	Pin-Cotter
14	133-9341-03	2	Plate-Support, Bellcrank
15	136-7469	2	Bearing-Spherical
16	3234-47	4	Screw-HHF
17	133-9343	1	Rod-Brake, RH
18	133-9344	1	Rod-Brake, LH
19	1-603807	2	Spring-Return, Neutral
20	110769	2	Spring-Extension

Rear Tire and Wheel Assembly

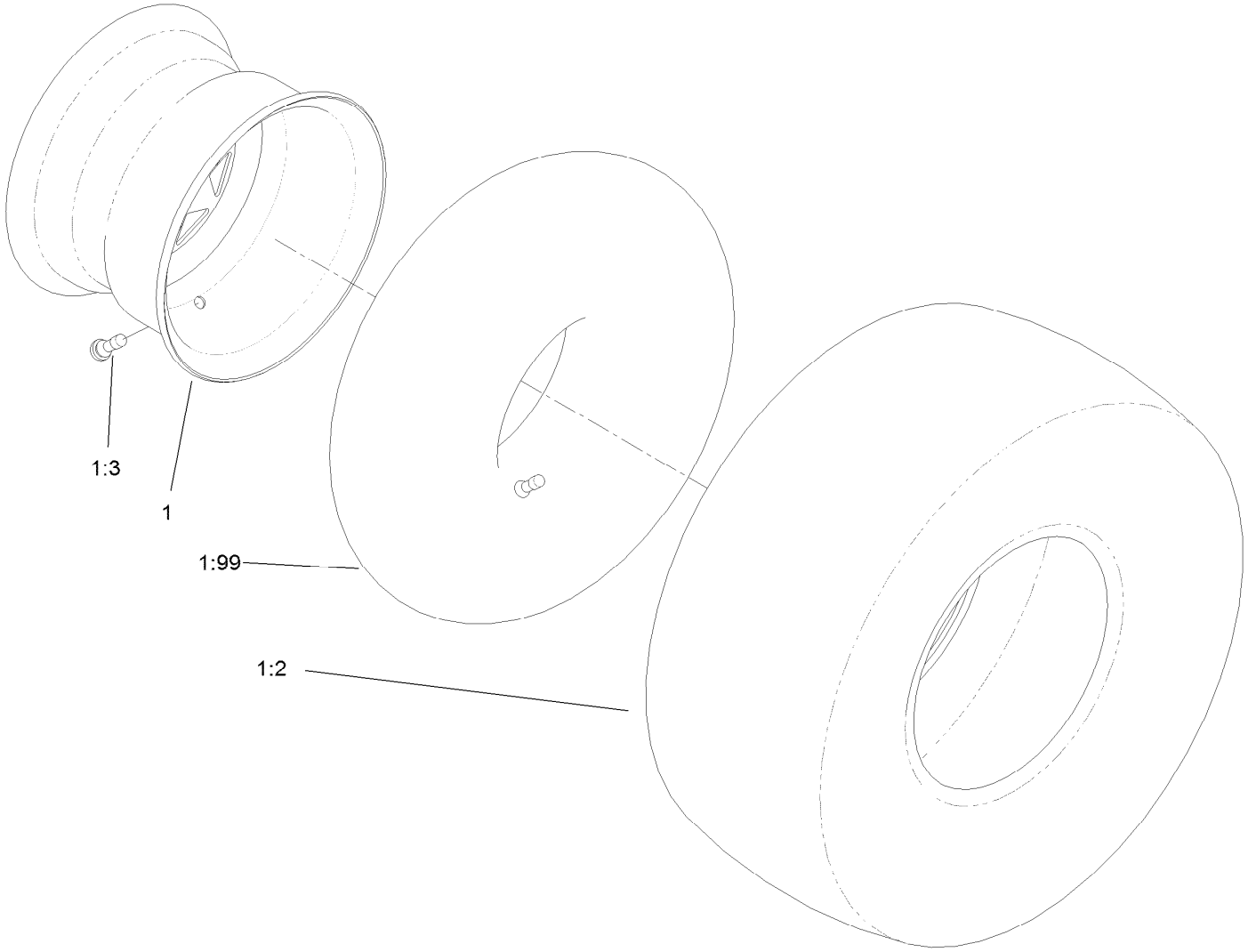

Rear Tire and Wheel Assembly (continued)

Ref.	Part Number	Qty.	Description
1	127-3449	2	Tire And Wheel ASM
1:2	125-1821	1	Tire
1:3	232-27	1	Stem-Valve
1:99	105-4070	1	Tube-Inner ●

● Optional Equipment

Seat Assembly

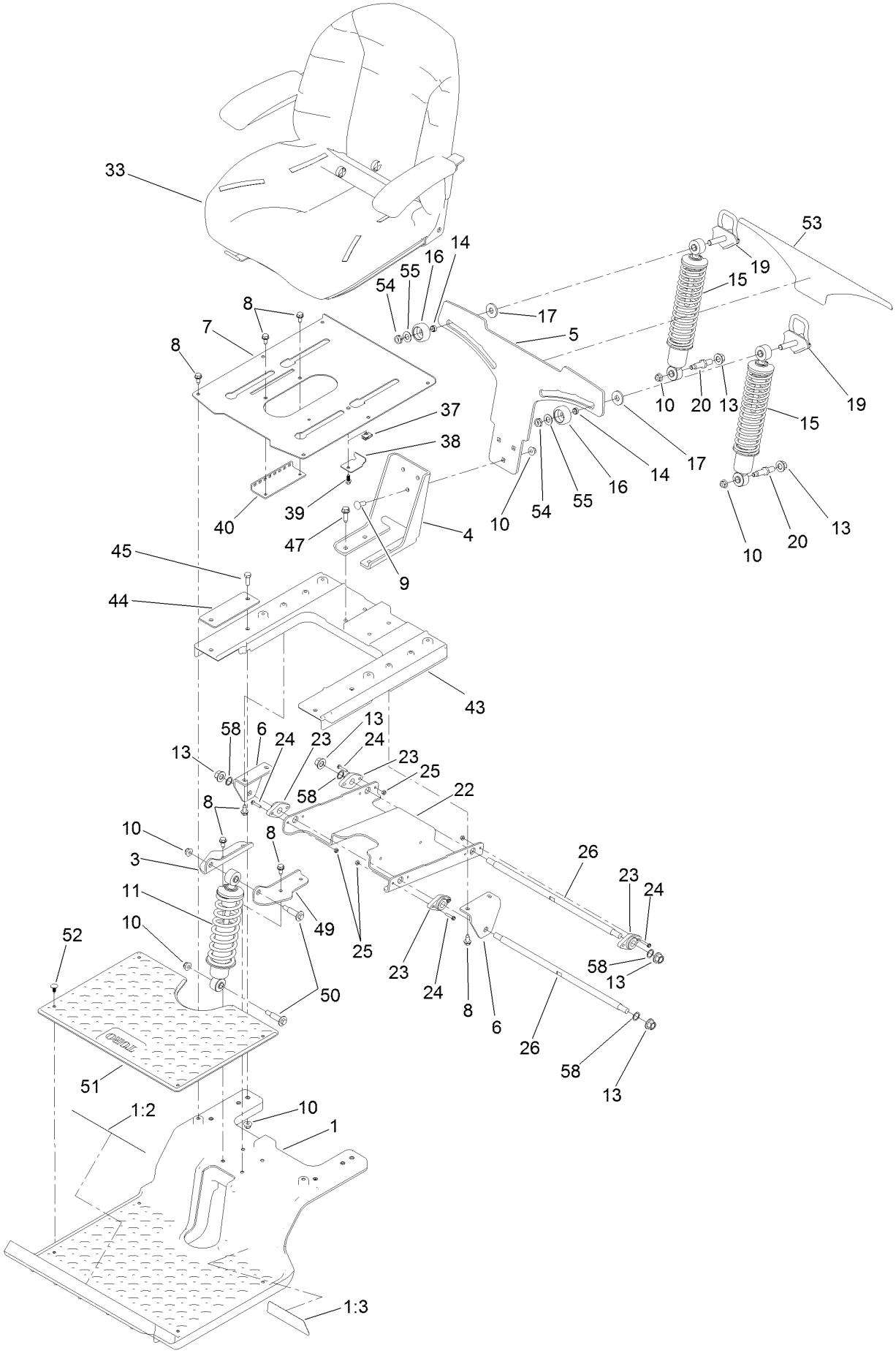

Seat Assembly (continued)

Ref.	Part Number	Qty.	Description
1	136-9191	1	Subframe-Front
1:2	132-0869	1	Decal-Danger
1:3	136-7470	1	Decal
3	133-9319-03	1	Bracket-Shock Mount, Upper (RH)
4	133-4442-03	1	Bracket-Mount, Lower
5	133-4462-03	1	Bracket-Mounting, Shock
6	133-4387-03	2	Bracket-Mount, Swing Arm
7	133-7029-03	1	Pan-Seat
8	32144-70	16	Screw-HWHTF
9	3231-22	3	Screw-CARR
10	104-8301	11	Nut-HF, NI
11	131-4651	1	Shock ASM
13	99-5107	6	Nut-Lock
14	133-5109	2	Bearing-Sleeve
15	133-5154	2	Shock/Spring ASM
16	136-5636	2	Knob-Lock, Cam
17	131-4699	2	Washer-Plastic
19	133-5105	2	Cam Lock ASM
20	133-4401	2	Bolt-Shoulder
22	133-4467-03	1	Plate-Swing Arm
23	136-5566	4	Bearing-Flange

Ref.	Part Number	Qty.	Description
24	131-6456	8	Screw-HWH
25	3296-2	8	Nut-Lock, NI
26	133-4438	2	Rod-Swing Arm
33	137-5007	1	Seat ASM
37	107069	1	Clip
38	131-1038	1	Bracket-Stop, Seat
39	99-6810	1	Screw-HHF
40	131-4008-03	1	Bracket-Latch, Seat
43	133-7084	1	Subframe-Rear
44	133-7089-03	2	Plate-Backer
45	323-6	4	Screw-HH
47	32144-109	4	Screw-Taptite
49	133-9318-03	1	Bracket-Shock Mount, Upper (LH)
50	56-6590	2	Bolt-Wheel
51	133-5190	1	Floormat
52	117-2382	4	Plug-Plastic
53	133-5198	1	Decal-Adjustment, Ride
54	3296-45	2	Nut-Lock, NI
55	3-6803	2	Washer-Adjusting
58	52-7280	4	Washer-Thrust

Seat Assembly No. 137-5007

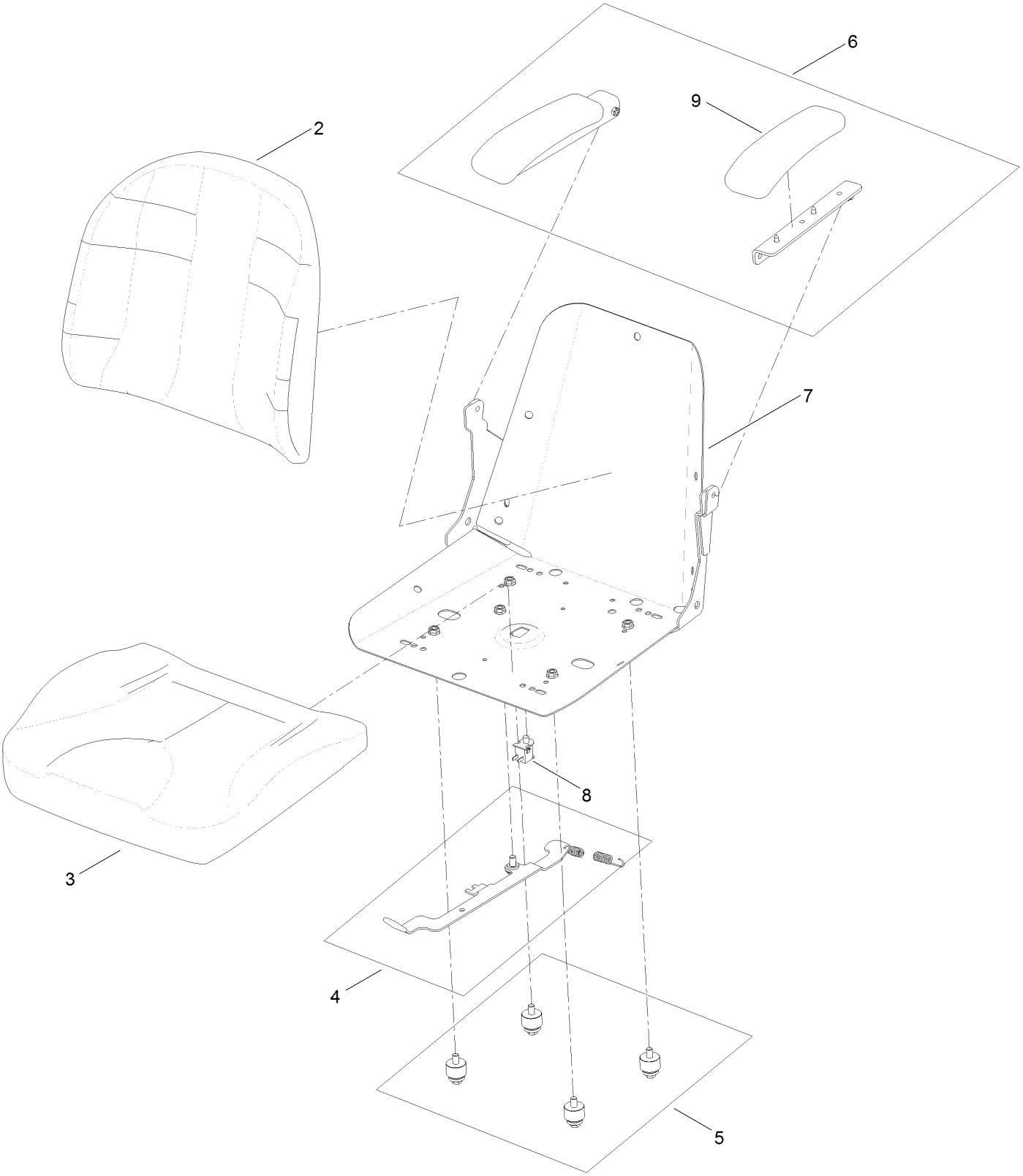

Seat Assembly No. 137-5007 (continued)

Ref.	Part Number	Qty.	Description
2	137-5005	1	Cushion-Seat, Back
3	137-5006	1	Custion-Seat, Bottom
4	131-4153	1	Track ASM
5	131-4154	1	Bushing ASM
6	131-4155	1	Armrest Kit
7	131-4156	1	Shell
8	82-2190	1	Switch-Bail
9	110-4163	2	Cushion-Rest, Arm

Motion Control Assembly

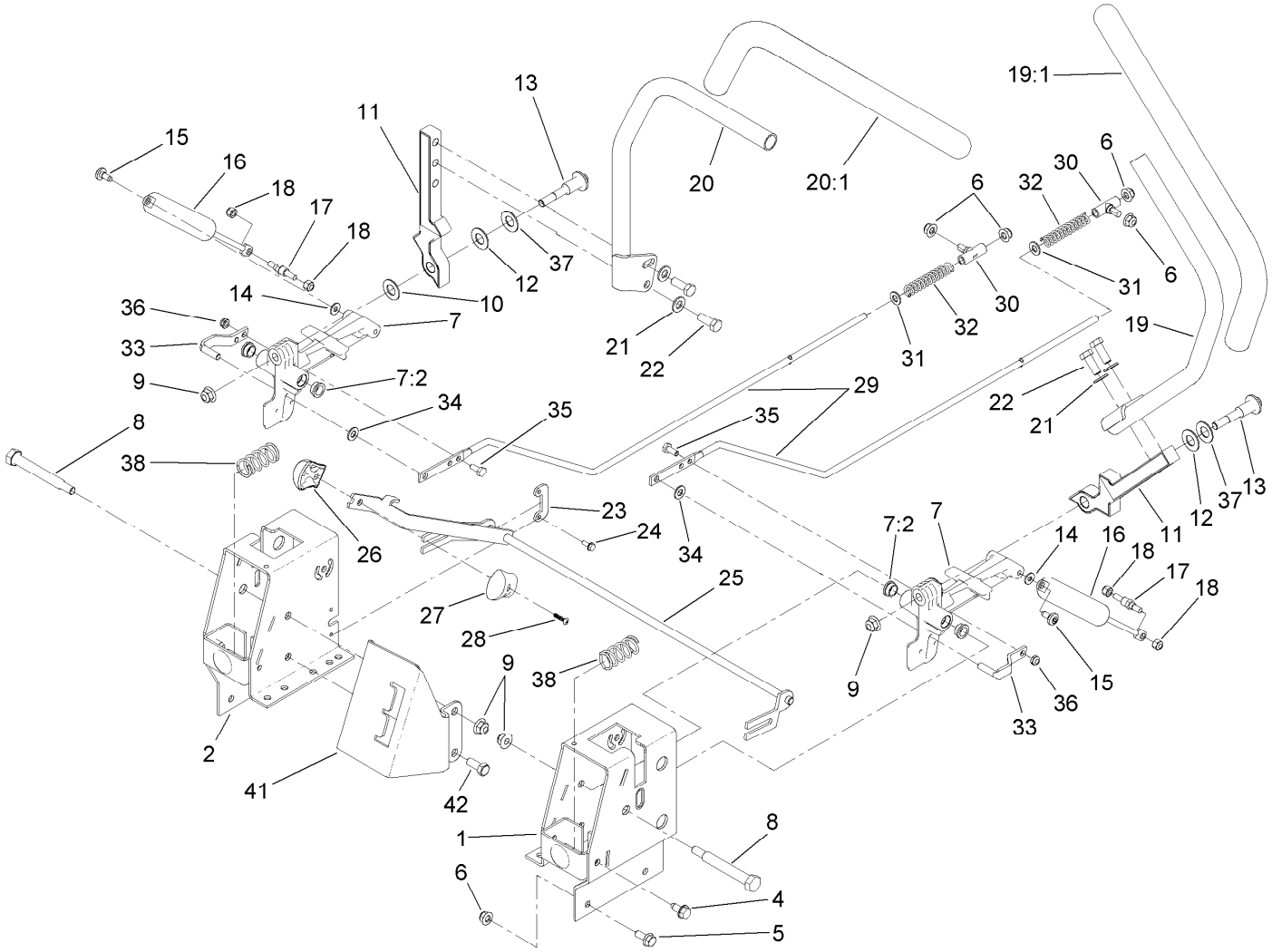

Motion Control Assembly (continued)

Ref.	Part Number	Qty.	Description
1	136-5614-03	1	Box-Control, LH
2	136-5613-03	1	Box-Control, RH
4	32144-70	2	Screw-HWHTF
5	3234-47	8	Screw-HHF
6	104-8300	12	Nut-HF, NI
7	119-3470	2	Actuator Arm ASM
7:2	256-156	2	Bushing-Flange
8	115-5099	2	Bolt-Pivot
9	104-8301	5	Nut-HF, NI
10	120-2273	2	Washer-Nylon
11	136-5570-05	2	Arm-Control
12	117-1240	2	Washer
13	117-1198	2	Bolt-Pivot
14	119-8952	2	Washer
15	120-7950	2	Screw-Shoulder
16	131-0964	2	Damper
17	110-6810	2	Stud-Damper
18	3296-42	4	Nut-Lock, NI
19	133-7055	1	Handle-Control, LH
19:1	121-0726	1	Grip
20	133-7057	1	Handle-Control, RH

Ref.	Part Number	Qty.	Description
20:1	121-0726	1	Grip
21	3256-24	4	Washer-Flat
22	323-6	4	Screw-HH
23	117-5385	2	Retainer
24	32144-1	4	Screw-Taptite
25	133-5165	1	Control-Speed
26	132-9368	1	Knob-RH
27	132-9369	1	Knob-LH
28	94-4496	1	Screw-PPH
29	117-5388	2	Rod-Hydro
30	119-8842	2	Mount-Rod, Hydro
31	3256-23	2	Washer-Plain
32	1-603807	2	Spring-Return, Neutral
33	121-1753	2	Pin-Rod, Hydro
34	93-6079	2	Spacer-Nylon
35	321-3	2	Screw-HH
36	3296-56	2	Nut-Lock, NI
37	119-8925	2	Washer-Belleville
38	119-8876	2	Spring-Return
41	136-2751-03	1	Gate-Control, Speed
42	323-5	1	Screw-HH

Engine and Muffler Assembly

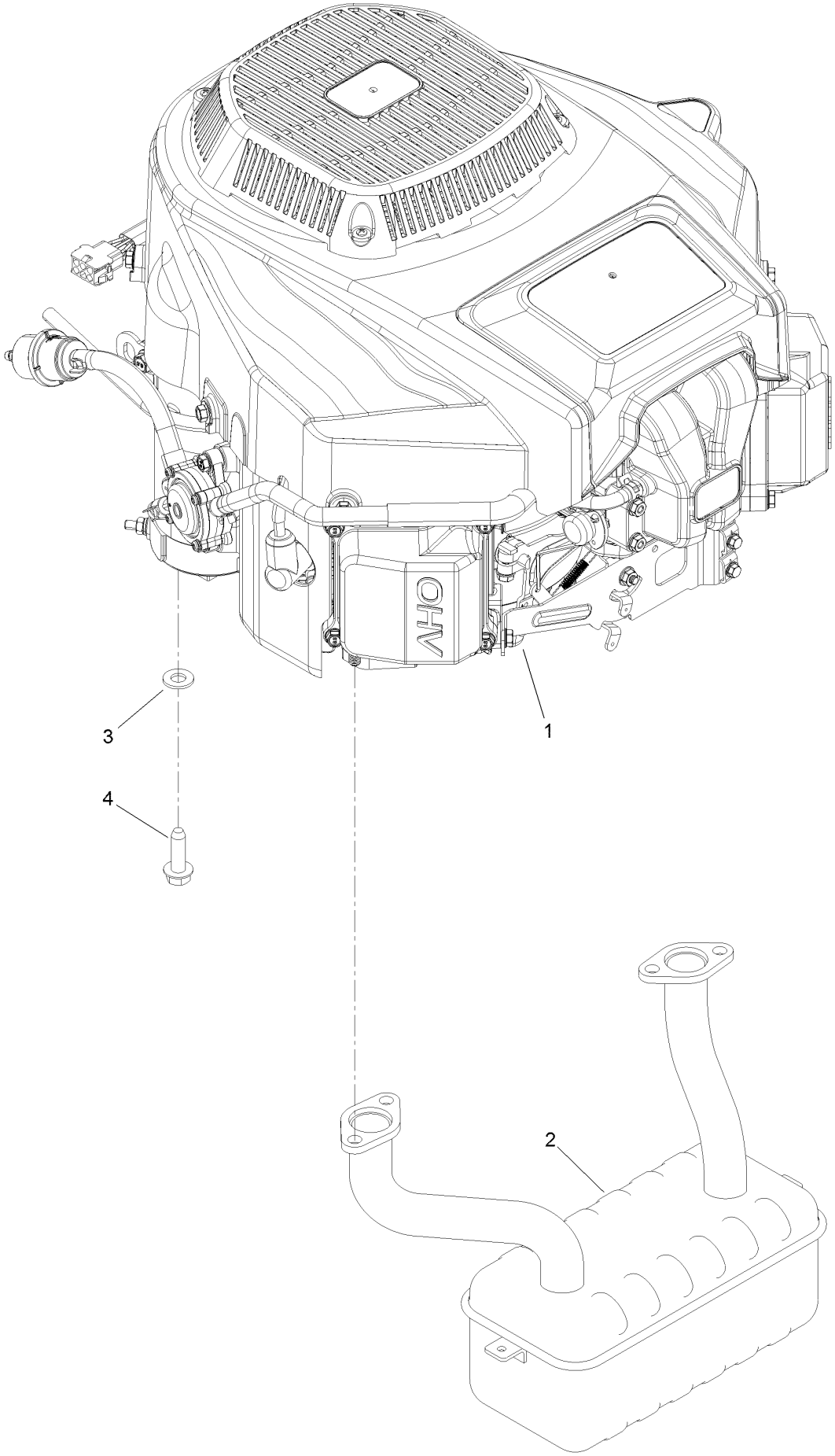

Engine and Muffler Assembly (continued)

Ref.	Part Number	Qty.	Description
1	127-9451	1	Engine-2P77F
2	130-6851	1	Muffler
3	3256-24	4	Washer-Flat
4	32144-109	4	Screw-Taptite

Fuel System Assembly with Non-Canister Style Air Filter

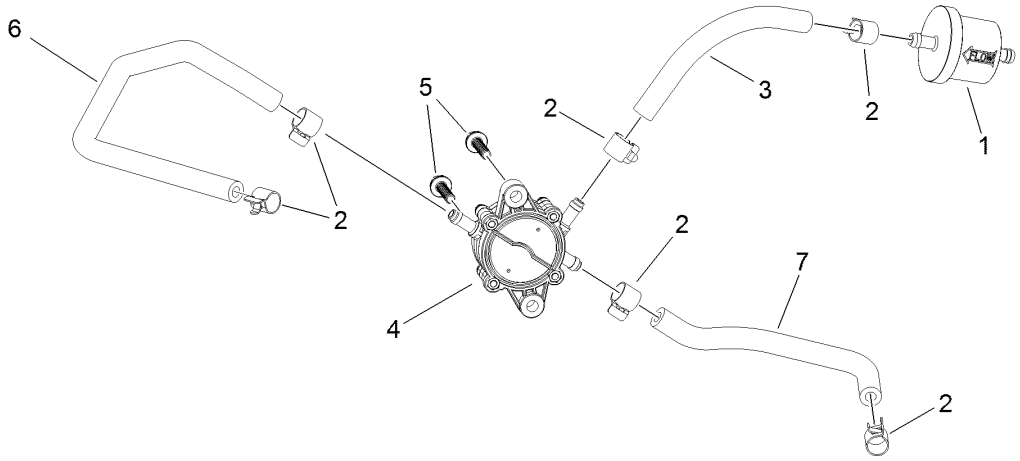

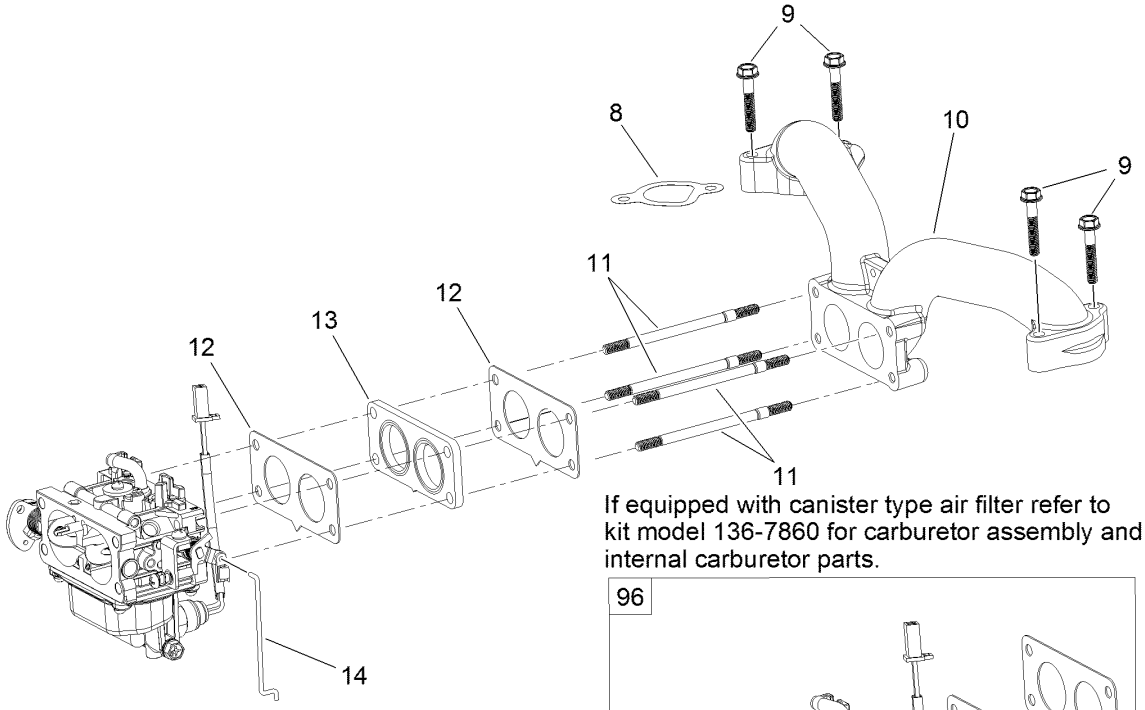

If equipped with canister type air filter refer to kit model 136-7860 for carburetor assembly and internal carburetor parts.

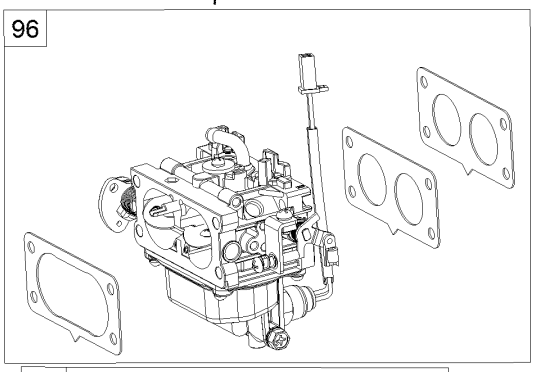

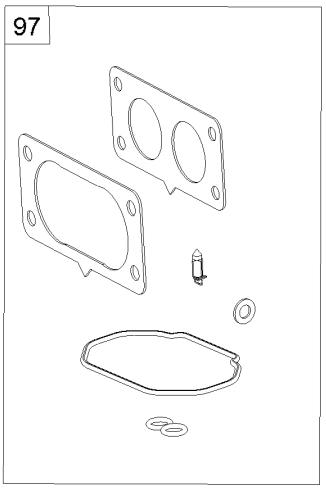

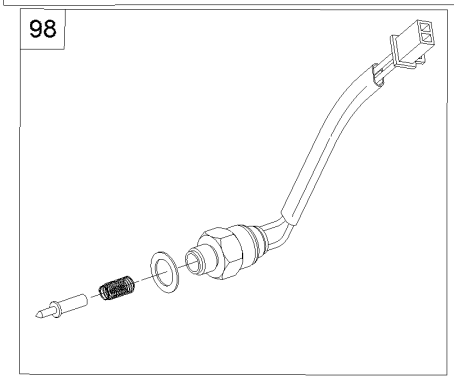

Fuel System Assembly with Non-Canister Style Air Filter (continued)

Ref.	Part Number	Qty.	Description
1	133-1563	1	Filter-Fuel
2	120-4251	6	Clamp-Fuel Line
3	120-4371	1	Line-Fuel
4	127-9206	1	Pump-Fuel
5	120-4225	2	Screw-HHF
6	127-9205	1	Hose-Fuel
7	127-9207	1	Hose-Fuel
8	127-9230	2	Gasket-Intake
9	120-4284	4	Screw-HHF
10	127-9244	1	Manifold-Intake
11	127-9245	4	Stud
12	127-9246	2	Gasket-Carburetor
13	127-9247	1	Insulator-Carburetor
14	127-9248	1	Linkage-Throttle
96	133-9808	1	Carburetor Replacement Kit
97	127-9290	1	Carburetor Repair Kit
98	127-9292	1	Solenoid Kit
99	133-9833	1	High Altitude Kit ●

● Not illustrated

Carburetor Assembly with Non-Canister Style Air Filter

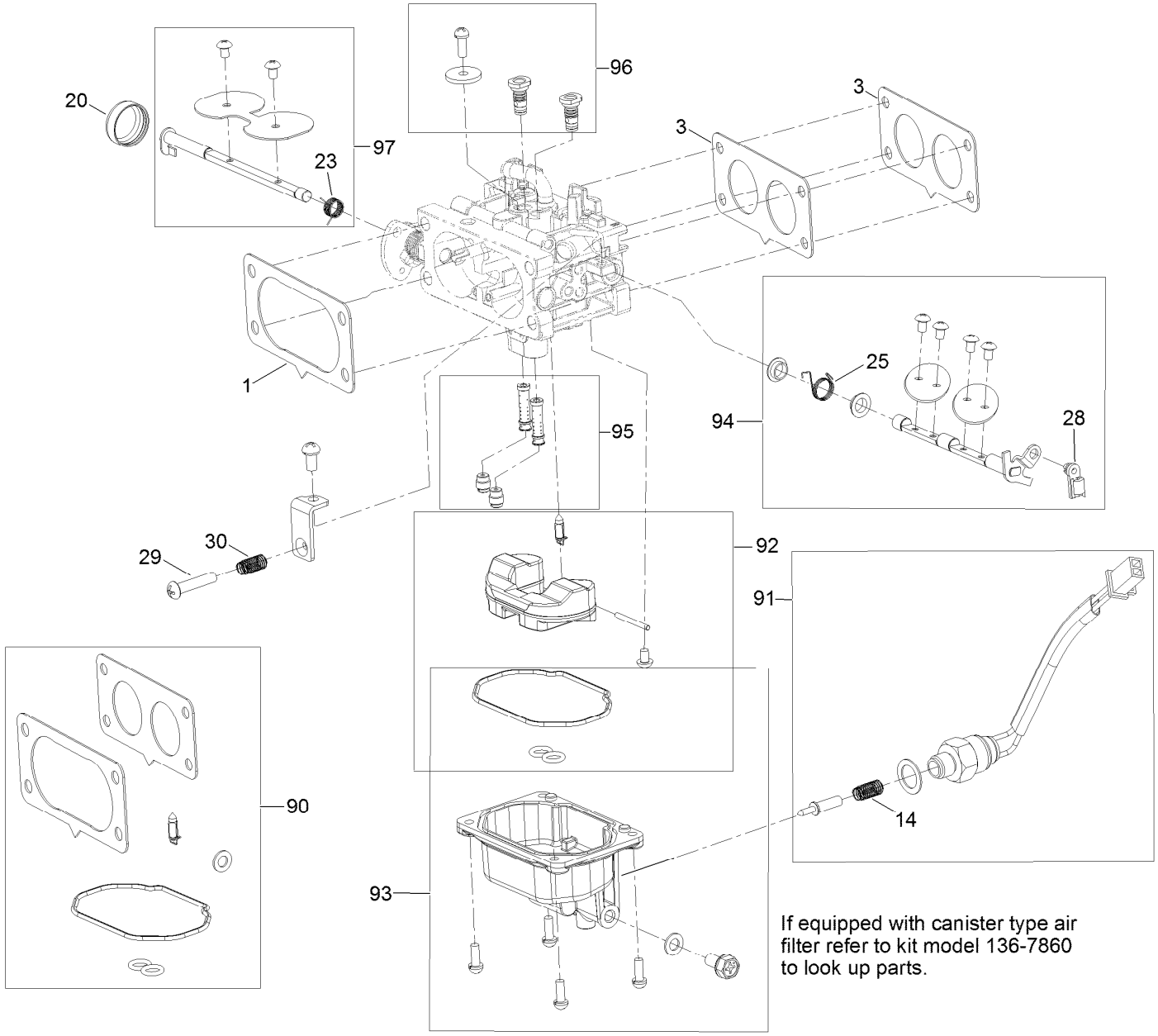

If equipped with canister type air filter refer to kit model 136-7860 to look up parts.

Carburetor Assembly with Non-Canister Style Air Filter (continued)

Ref.	Part Number	Qty.	Description
1	127-9251	1	Gasket-Carburetor
3	127-9246	2	Gasket-Carburetor
14	127-9319	1	Spring
20	127-9325	1	Cover-Shaft, Choke
23	127-9328	1	Spring
25	127-9330	1	Spring
28	127-9333	1	Clamp-Lock
29	127-9334	1	Screw-PPH
30	127-9335	1	Spring

Ref.	Part Number	Qty.	Description
90	127-9290	1	Carburetor Repair Kit
91	127-9292	1	Solenoid Kit
92	127-9340	1	Float Kit
93	127-9341	1	Bowl Kit
94	133-9817	1	Throttle Shaft Kit
95	133-9818	1	Nozzle And Jet Kit
96	133-9812	1	Air Jet Kit
97	127-9345	1	Choke Shaft Kit

Air Intake and Filtration Assembly with Non-Canister Style Air Filter

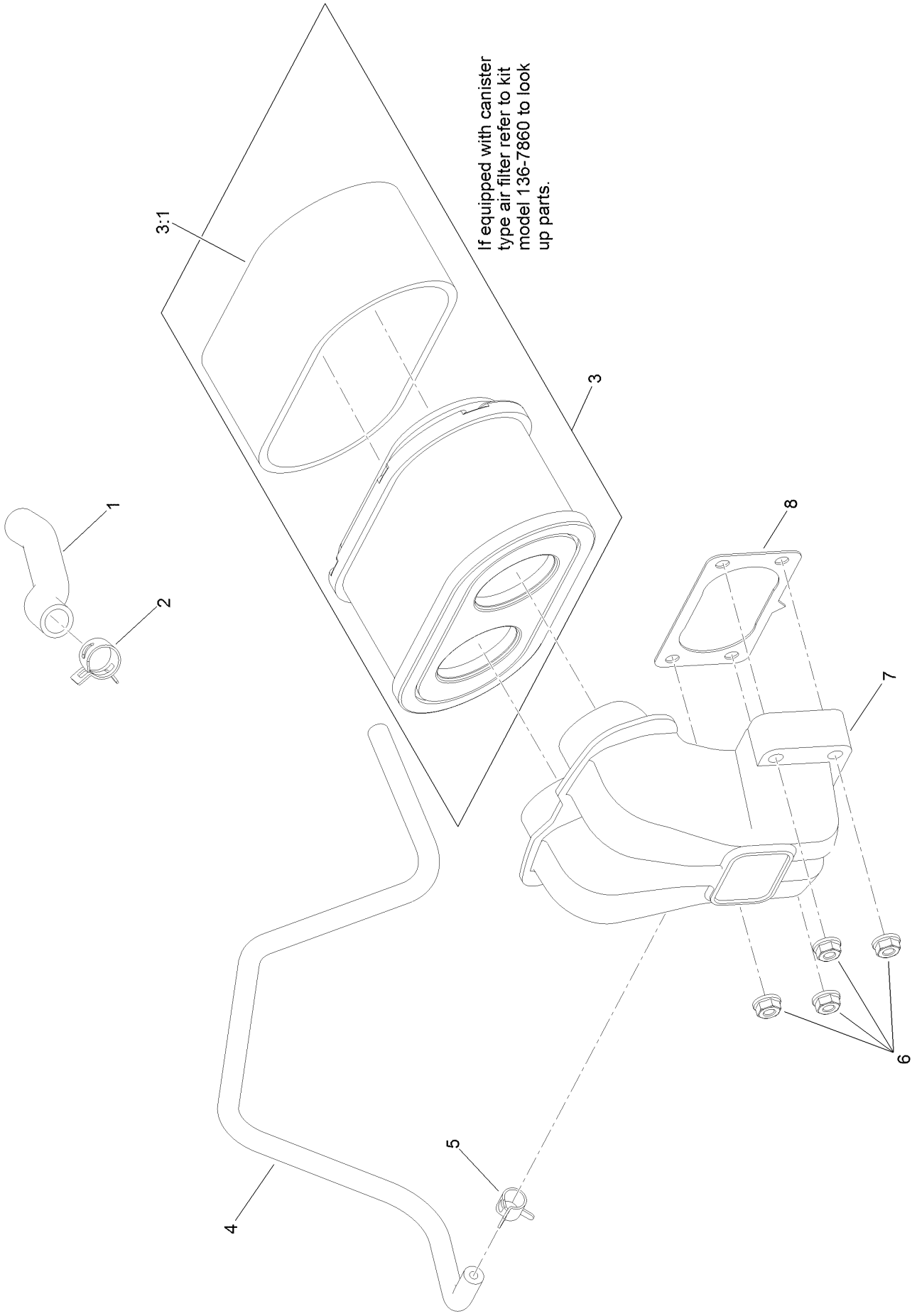

Air Intake and Filtration Assembly with Non-Canister Style Air Filter (continued)

Ref.	Part Number	Qty.	Description
1	127-9235	1	Tube-Breather
2	127-9234	2	Clamp-Hose
3	127-9252	1	Filter-Air, Complete
3:1	127-9288	1	Filter-Pre, Foam
4	127-9253	1	Hose-Fuel
5	127-9187	1	Clamp-Hose
6	120-4236	4	Nut-Flange
7	127-9047	1	Manifold-Filter, Air
8	127-9251	1	Gasket-Carburetor

Ignition and Electrical Assembly

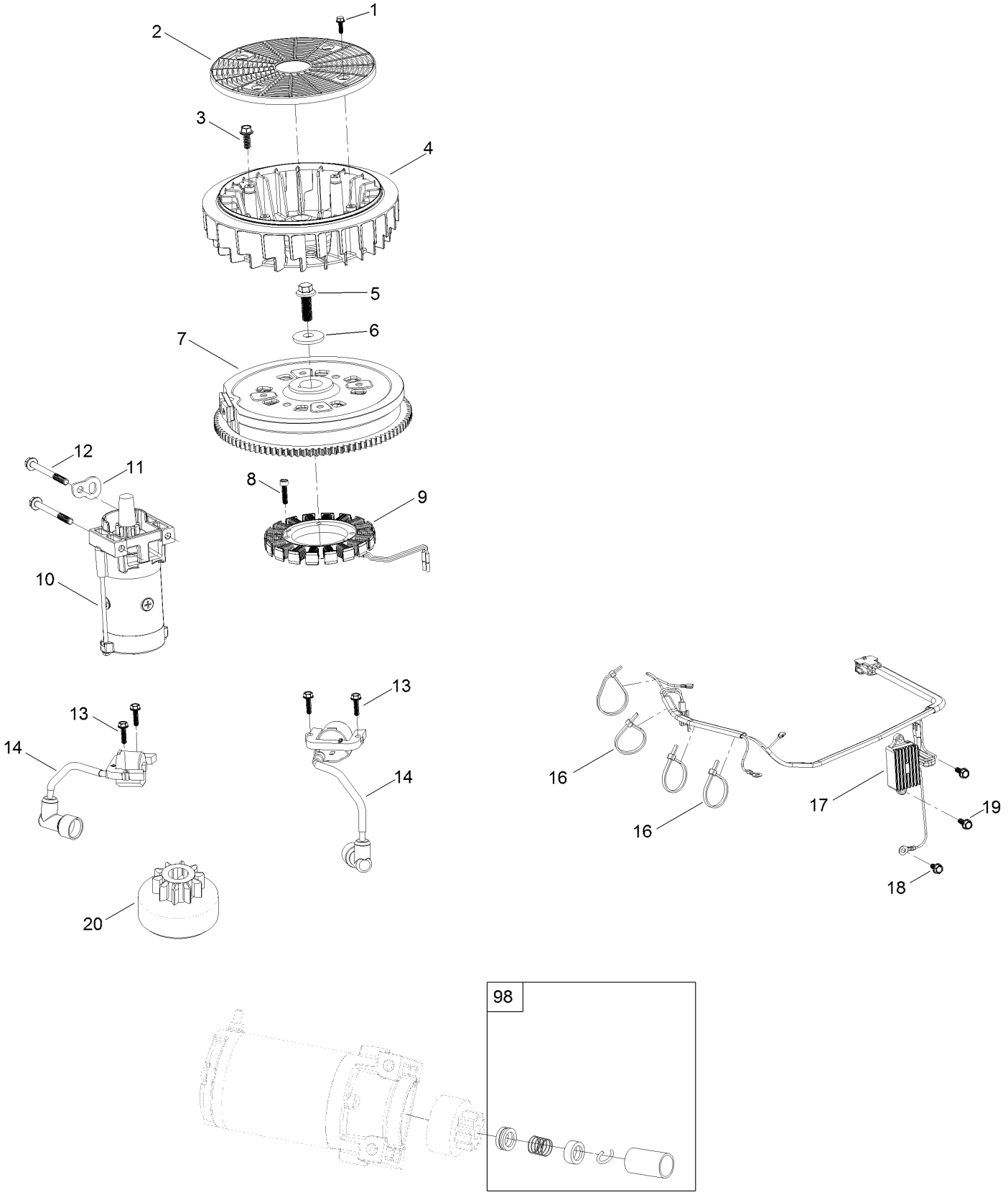

Ignition and Electrical Assembly (continued)

Ref.	Part Number	Qty.	Description
1	127-9197	4	Screw-HWH
2	127-9198	1	Screen-Rotating
3	127-9199	4	Screw-HWH
4	127-9200	1	Fan-Cooling
5	127-9201	1	Screw-HWH
6	127-9202	1	Washer-Flat
7	127-9306	1	Flywheel
8	127-9210	4	Screw-HSH
9	127-9211	1	Alternator
10	133-9828	1	Motor-Starter
11	127-9208	1	Bracket-Lift
12	120-4231	2	Screw-HHF
13	121-0007	4	Bolt-Flange
14	127-9216	2	Ignition Coil ASM
16	127-9220	4	Tie-Zip
17	127-9219	1	Regulator-Voltage W/Harness
18	120-4216	1	Screw-HHF
19	120-4232	2	Screw-HHF
20	133-1562	1	Pinion-Starter
98	133-1566	1	Starter Repair Kit

Crankcase and Crankshaft Assembly

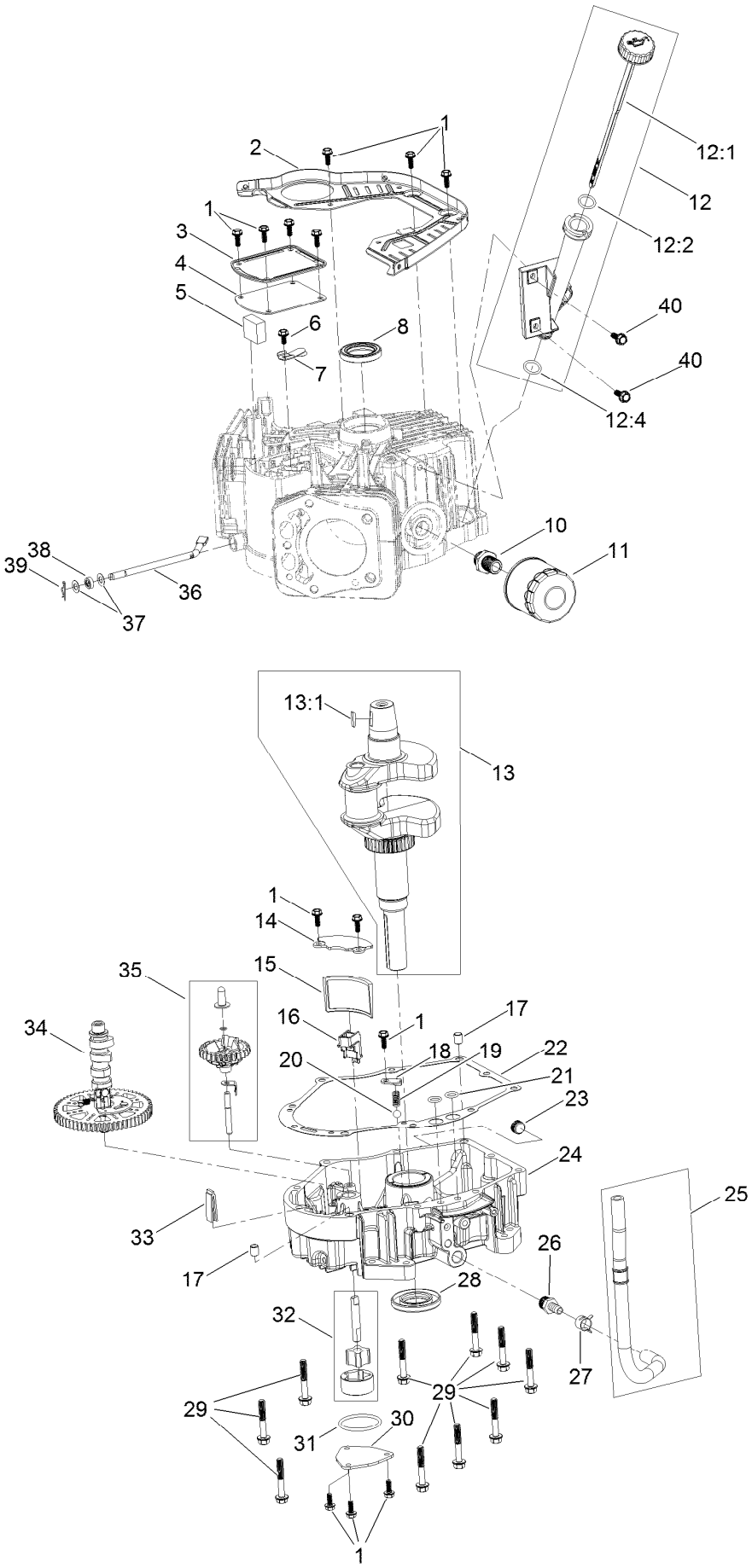

Crankcase and Crankshaft Assembly (continued)

Ref.	Part Number	Qty.	Description
1	120-4232	14	Screw-HHF
2	127-9212	1	Baffle
3	127-9213	1	Cover-Breather
4	127-9214	1	Gasket-Breather
5	127-9215	1	Filter-Breather
6	120-4216	1	Screw-HHF
7	127-9217	1	Valve-Breather
8	120-4267	1	Seal-Oil
10	120-4346	1	Adaptor-Filter, Oil
11	120-4276	1	Filter-Oil
12	127-9218	1	Oil Tube ASM
12:1	127-9283	1	Dipstick
12:2	127-9284	1	O-Ring
12:4	127-9286	1	O-Ring
13	127-9255	1	Crankshaft
13:1	120-4320	1	Key-Woodruff
14	127-9261	1	Cover-Screen, Oil
15	127-9262	1	Screen-Oil
16	127-9263	1	Retainer-Screen
17	120-4274	2	Pin-Dowel
18	127-9264	1	Plate-Retainer
19	127-9265	1	Spring
20	127-9266	1	Valve-Ball
21	120-4262	2	O-Ring
22	127-9267	1	Gasket-Cover, Crankcase
23	133-9805	1	Plug-Drain
24	133-9806	1	Cover-Crankcase
25	127-9293	1	Oil Drain Hose ASM
26	127-9275	1	Fitting-Hose
27	127-9276	1	Clamp-Hose
28	127-9271	1	Seal
29	121-0473	10	Screw-HHF
30	127-9274	1	Cover-Oil Pump
31	127-9273	1	O-Ring
32	127-9272	1	Oil Pump ASM
33	120-4275	1	Deflector-Oil, Rubber
34	133-1568	1	Camshaft
35	133-9807	1	Governor ASM
36	127-9238	1	Rod-Governor
37	120-4258	2	Washer-Plain
38	120-4257	1	Seal-Oil
39	120-4256	1	Pin-Hair
40	120-4232	2	Screw-HHF

Governor Control Assembly

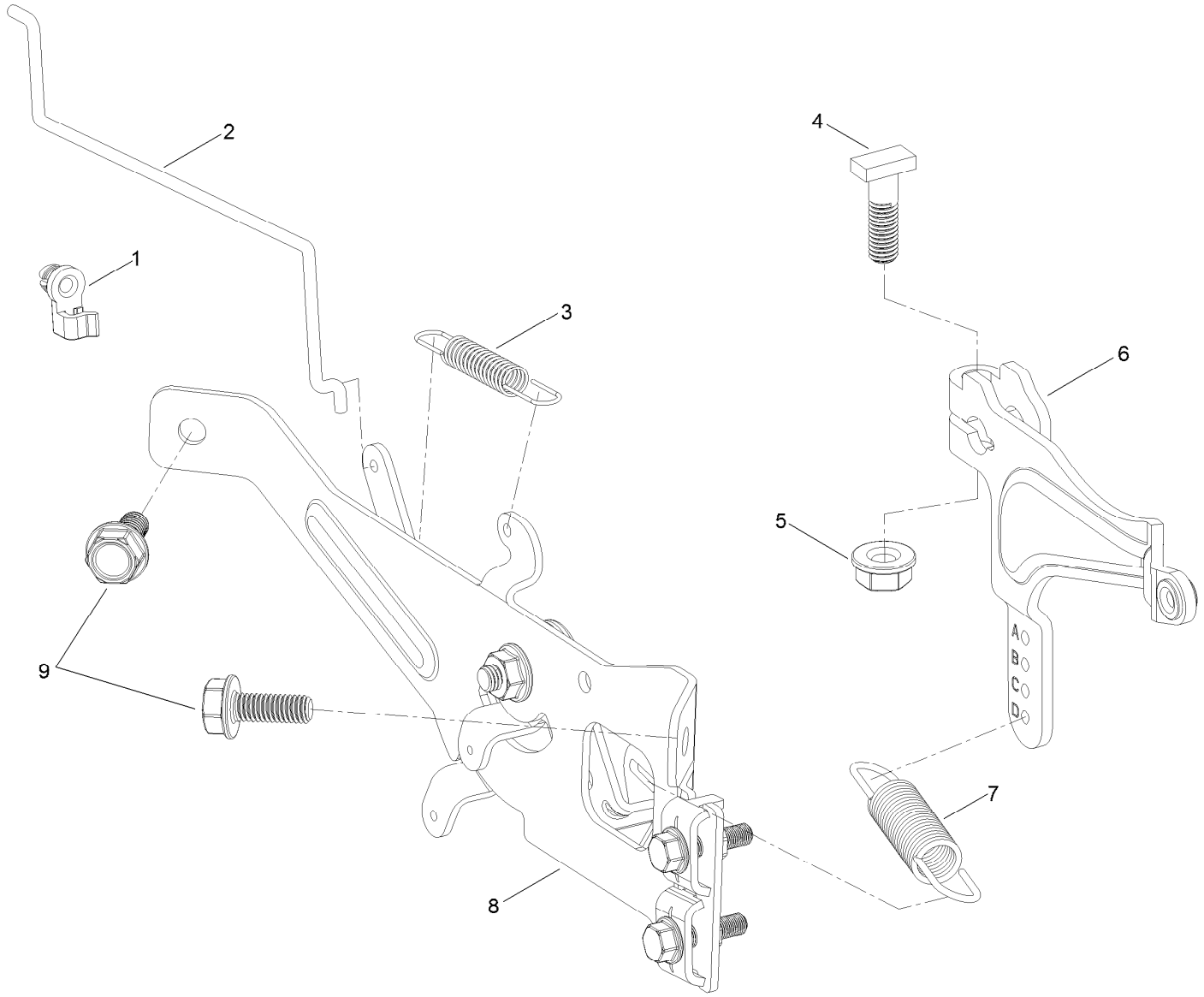

Governor Control Assembly (continued)

Ref.	Part Number	Qty.	Description
1	127-9250	1	Clip-Linkage
2	127-9242	1	Linkage-Choke
3	127-9241	1	Spring-Governor
4	120-4238	1	Bolt-Arm, Governor
5	120-4236	1	Nut-Flange
6	127-9239	1	Arm-Governor
7	133-9809	1	Spring-Governor
8	133-1570	1	Control Plate ASM
9	120-4232	2	Screw-HHF

Piston and Cylinder Head Assembly

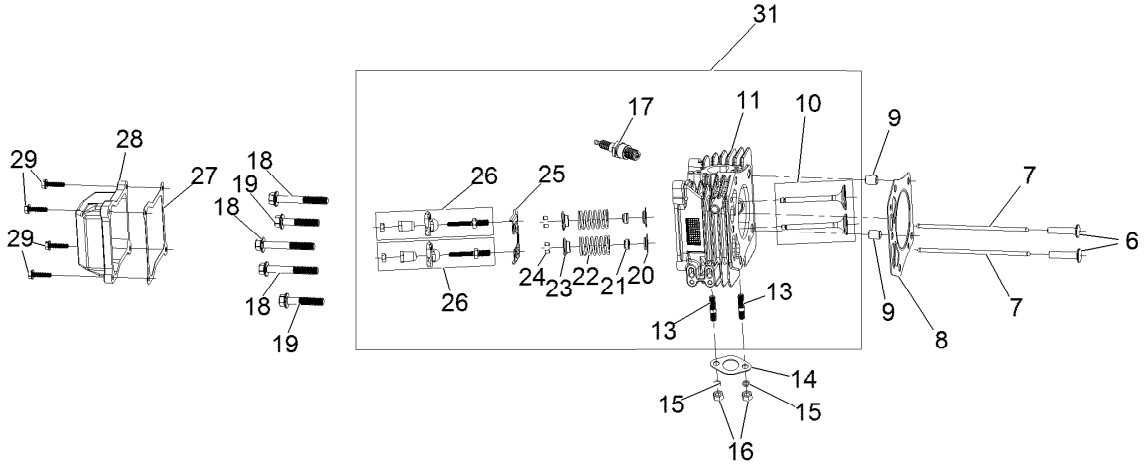

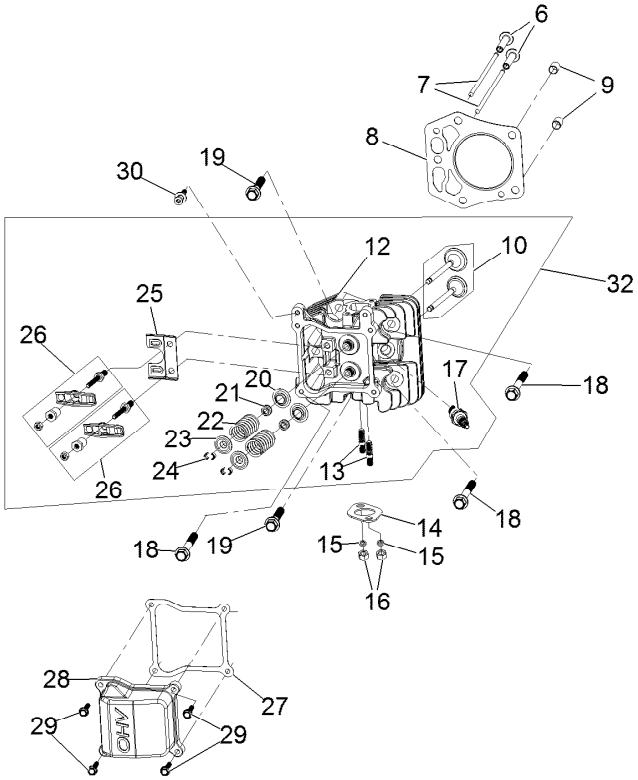

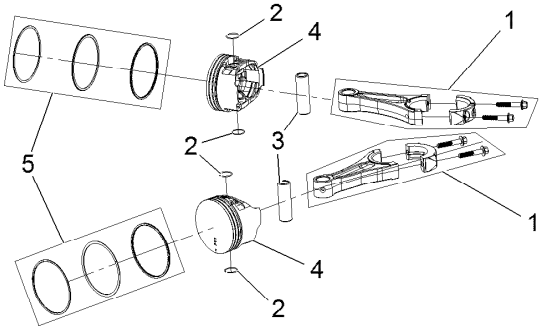

Piston and Cylinder Head Assembly (continued)

Ref.	Part Number	Qty.	Description
1	127-9256	2	Connecting Rod ASM
2	127-9258	4	Clip-Pin, Piston
3	127-9257	2	Pin-Piston
4	127-9259	2	Piston
5	127-9260	2	Piston Ring Set
6	127-9224	4	Lifter-Valve
7	127-9225	4	Rod-Push
8	127-9226	2	Gasket-Head, Cylinder
9	127-9227	4	Pin-Dowel
10	127-9228	2	Valve Set
11	133-9802	1	Head-Cylinder, Right
12	133-9804	1	Head-Cylinder, Left
13	121-0464	4	Stud-Exhaust
14	120-4317	2	Gasket-Exhaust
15	127-9279	4	Washer-Lock, Split
16	121-0199	4	Nut-HH
17	81-3250	2	Spark Plug
18	127-9231	6	Screw-HWH
19	127-9232	4	Screw-HWH
20	120-4303	4	Seat-Spring, Valve
21	120-4304	4	Seal-Stem, Valve
22	120-4305	4	Spring-Valve
23	120-4306	4	Retainer-Spring, Valve
24	120-4307	8	Keeper-Valve
25	127-9233	2	Plate-Guide, Push Rod
26	127-9294	4	Rocker Arm ASM
27	127-9295	2	Gasket-Valve Cover
28	127-9050	2	Cover-Valve
29	120-4225	8	Screw-HHF
30	120-4214	1	Screw-Shoulder, HH
31	133-9819	1	Right Head ASM
32	133-9820	1	Left Head ASM

Blower Housing Assembly

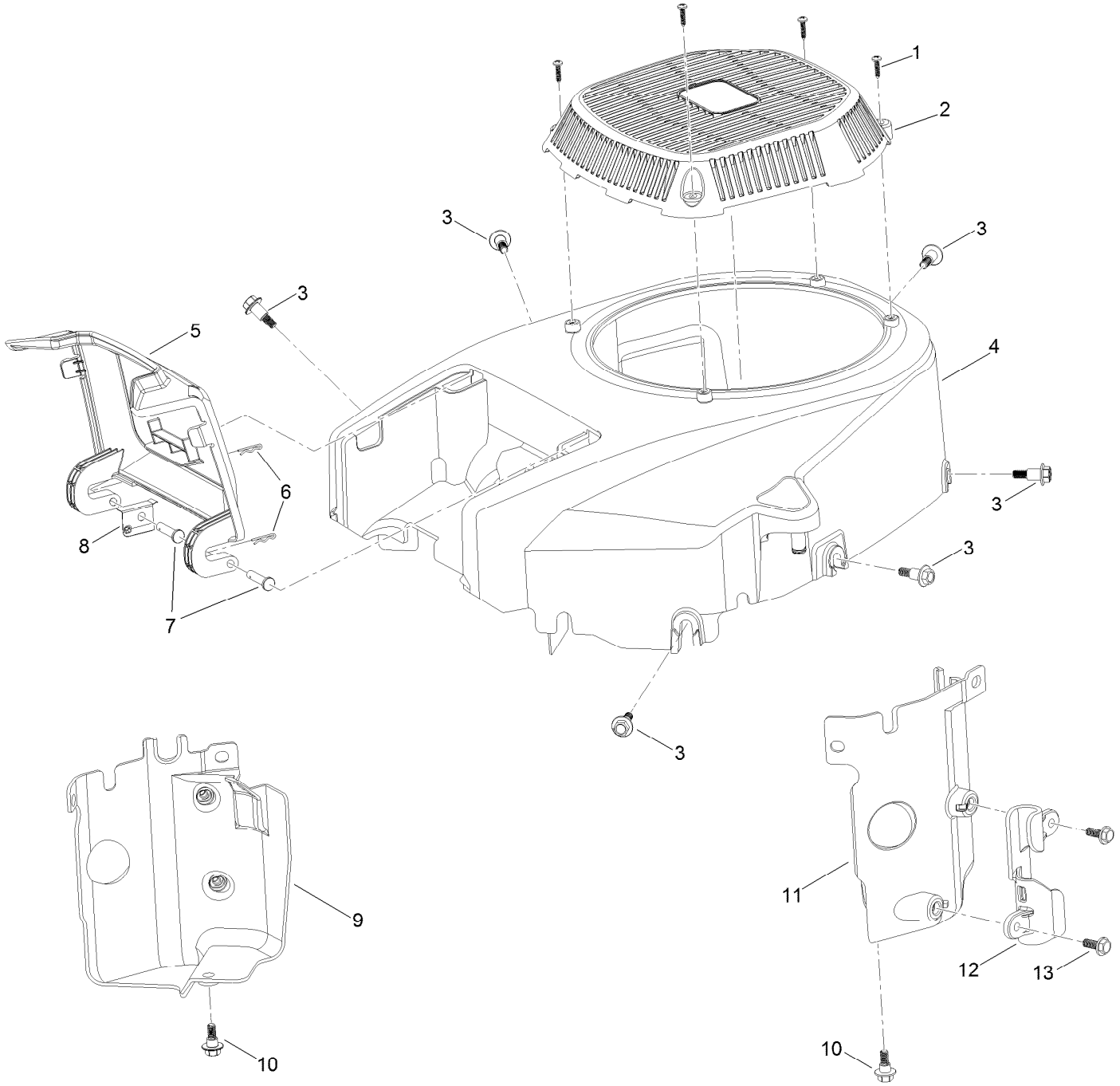

Blower Housing Assembly (continued)

Ref.	Part Number	Qty.	Description
1	133-1571	4	Screw-PPH, Plastic
2	127-9045	1	Cover-Fan
3	127-9196	6	Screw-Shoulder, HWH
4	133-1572	1	Shroud-Engine
5	127-9046	1	Door-Filter, Air
6	127-9280	2	Pin-Hair
7	127-9282	2	Pin
8	127-9281	1	Plate-Spring
9	127-9049	1	Baffle-Air, Left
10	120-4210	2	Screw-Shoulder, HHF
11	127-9048	1	Baffle-Air, Right
12	127-9287	1	Cleat-Hose
13	120-4232	2	Screw-HHF

Gasket and Seal Kit

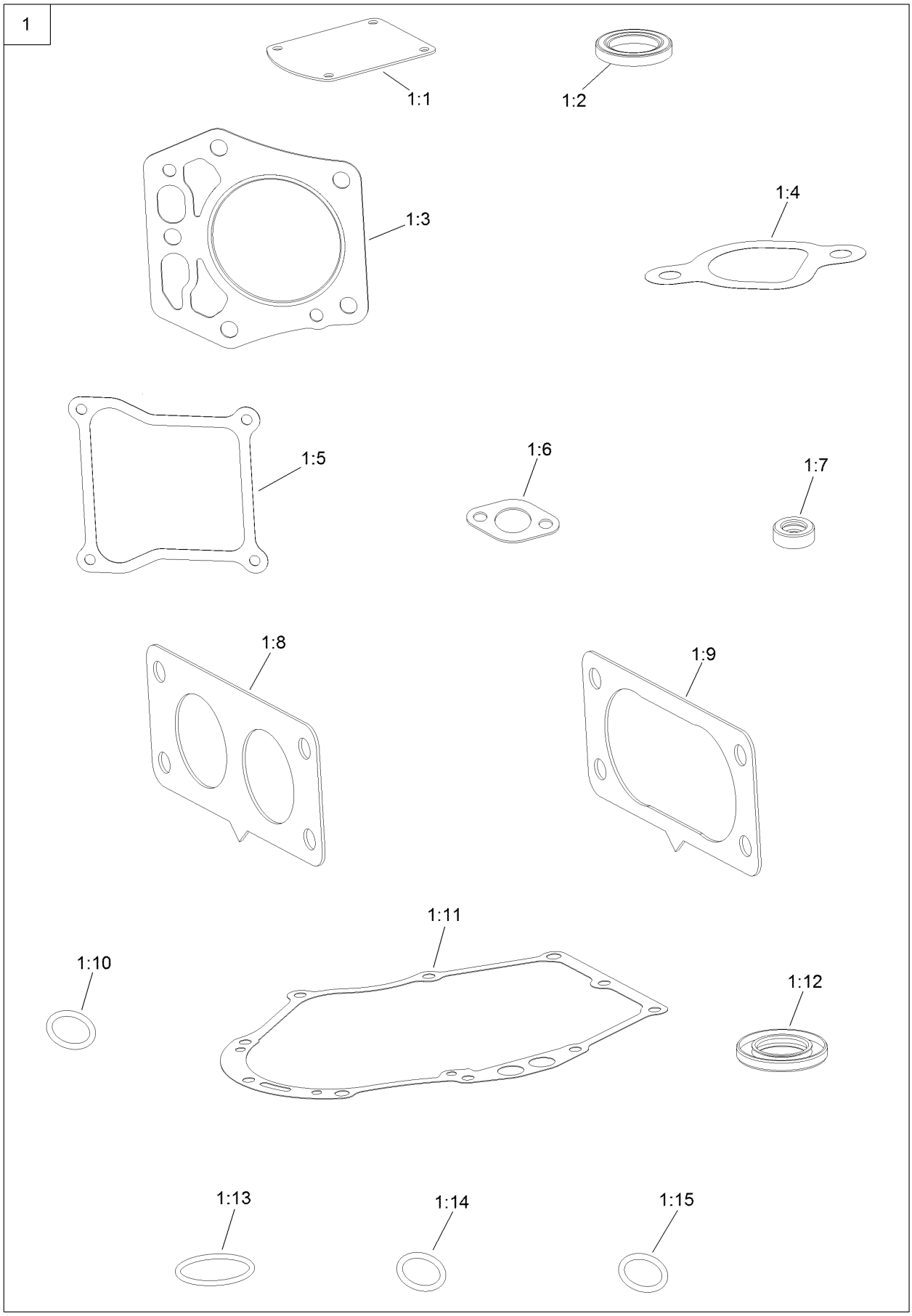

Gasket and Seal Kit (continued)

Ref.	Part Number	Qty.	Description
1	127-9296	1	Gasket And Seal Kit
1:1	127-9214	1	Gasket-Breather
1:2	120-4267	1	Seal-Oil
1:3	127-9226	2	Gasket-Head, Cylinder
1:4	127-9230	2	Gasket-Intake
1:5	127-9295	2	Gasket-Valve Cover
1:6	120-4317	2	Gasket-Exhaust
1:7	120-4257	1	Seal-Oil

Ref.	Part Number	Qty.	Description
1:8	127-9246	2	Gasket-Carburetor
1:9	127-9251	1	Gasket-Carburetor
1:10	120-4262	2	O-Ring
1:11	127-9267	1	Gasket-Cover, Crankcase
1:12	127-9271	1	Seal
1:13	127-9273	1	O-Ring
1:14	127-9284	1	O-Ring
1:15	127-9286	1	O-Ring

Body Styling and Fuel Tank Assembly

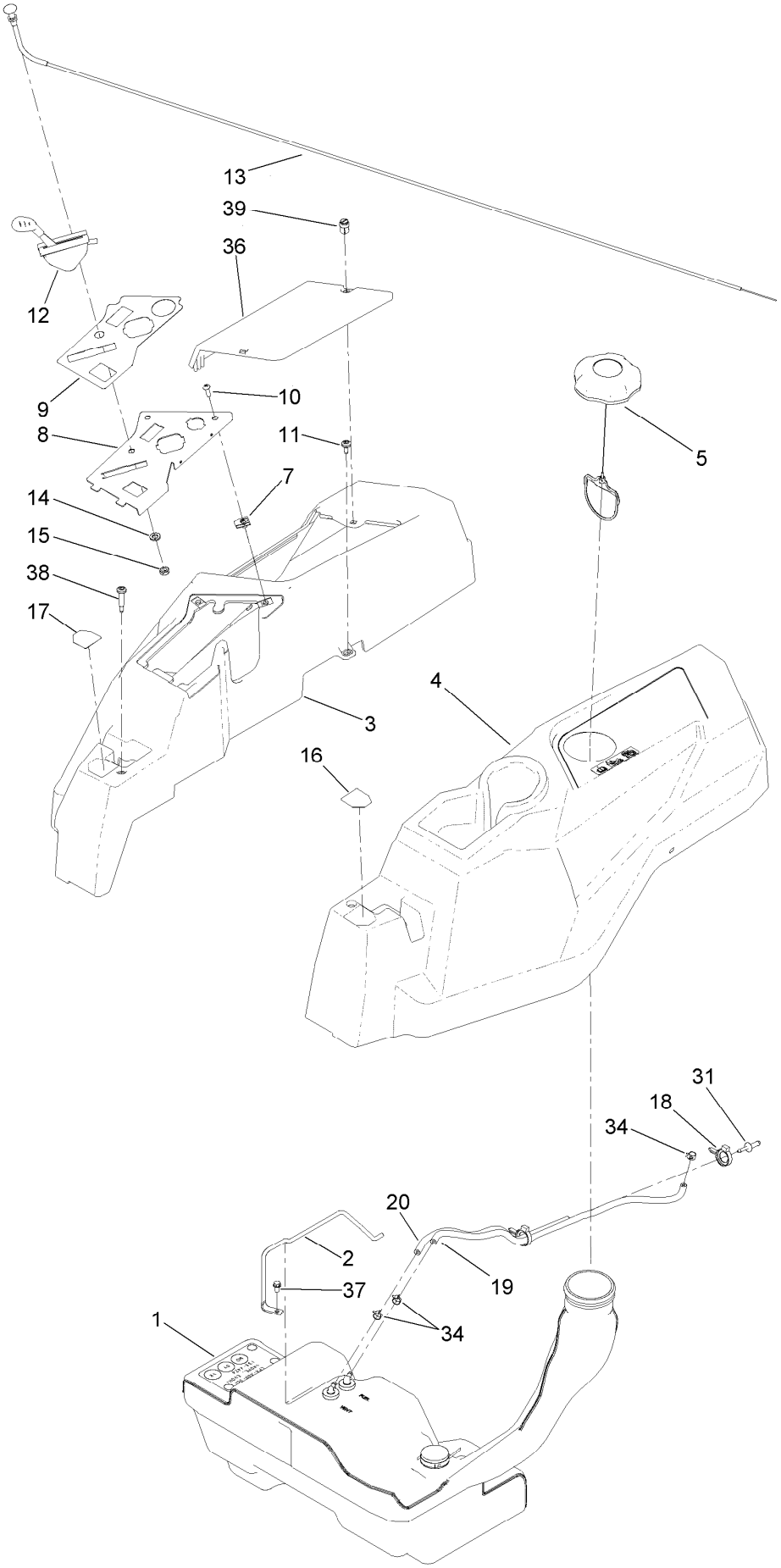

Body Styling and Fuel Tank Assembly (continued)

Ref.	Part Number	Qty.	Description
1	133-4484	1	Fuel Tank ASM
2	136-4180	1	Rod-Hold Down
3	133-9307	1	Pod-RH
4	133-9315	1	Pod-LH
5	120-5461	1	Cap-Fuel, Ratcheting
7	107069	2	Clip
8	133-9346-03	1	Panel-Control
9	133-9263	1	Decal-Control W/Choke
10	3258-166	2	Screw-PRH
11	120-7950	4	Screw-Shoulder
12	136-5622	1	Cable-Throttle
13	112-9753	1	Cable-Choke
14	3253-21	1	Washer-Lock
15	3220-3	1	Nut-HJ
16	136-4243	1	Decal-Lever, Control (LH)
17	136-4244	1	Decal-Lever, Control (RH)
18	105-1853	2	Clamp-Hose
19	110-5701	1	Hose-Fuel
20	136-7525	1	Hose-Fuel
31	117-5399	1	Adaptor-Orifice
34	2412-98	3	Clamp-Hose
36	133-9308	1	Cover-Battery
37	32144-4	1	Screw-HWH
38	136-4195	2	Screw-Shoulder
39	121-5840	2	Fastener

Fuel Tank Assembly No. 133-4484

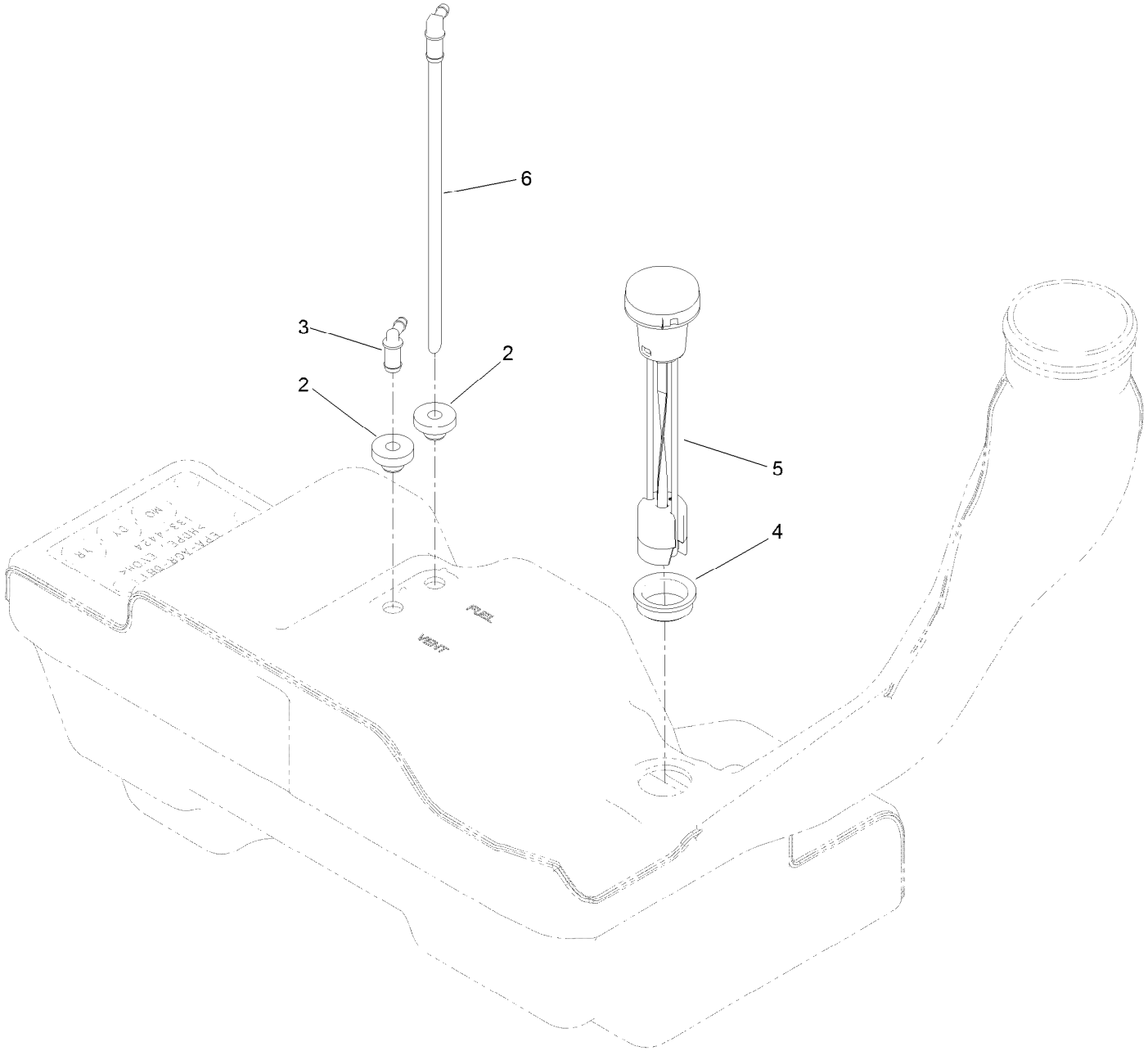

Fuel Tank Assembly No. 133-4484 (continued)

Ref.	Part Number	Qty.	Description
2	46-6560	2	Bushing
3	117-7400	1	Fitting-Plastic
4	133-9269	1	Grommet-Fuel
5	133-9270	1	Gauge-Fuel
6	121-0793	1	Connector-Elbow, 90 DEG

Electrical Assembly

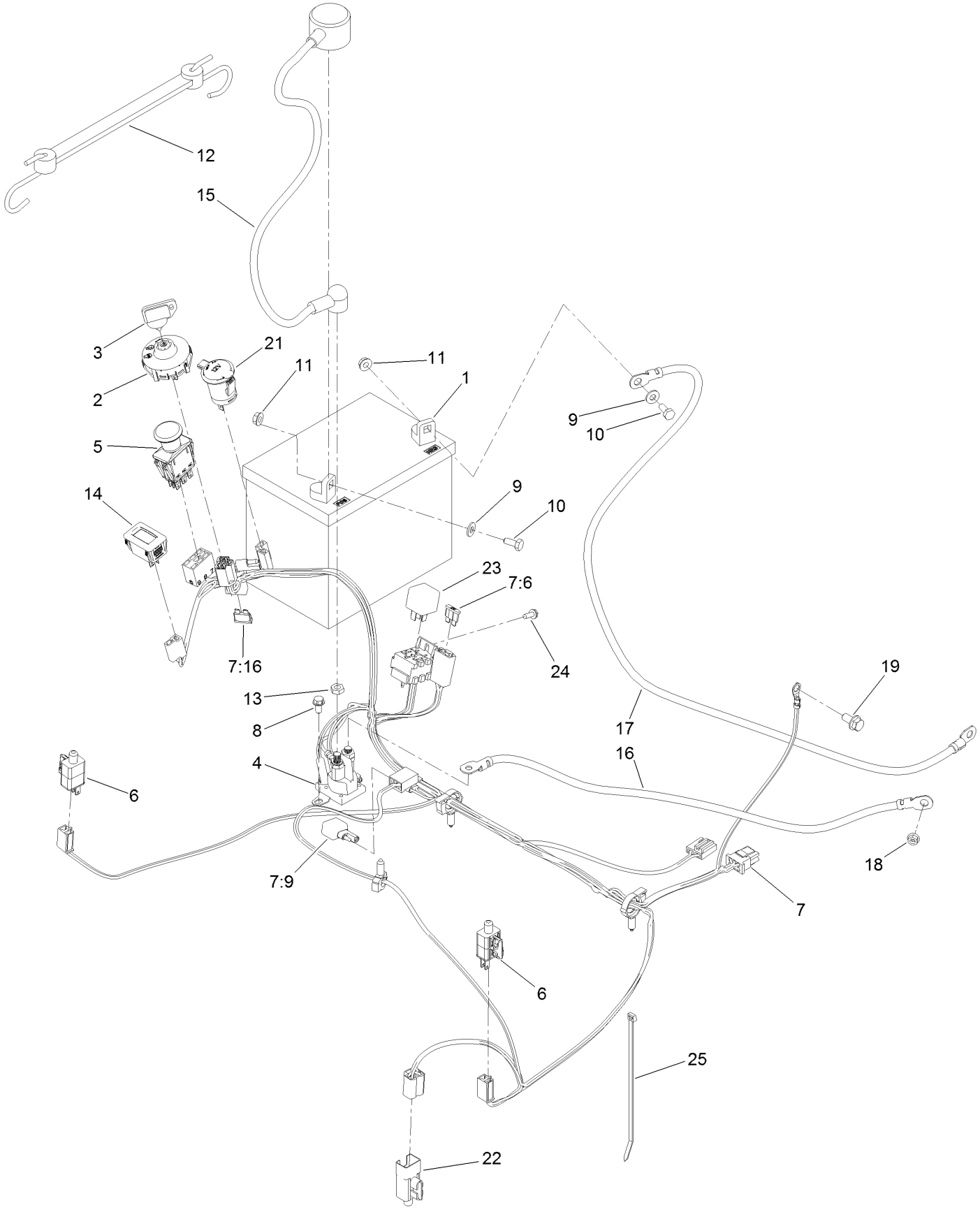

Electrical Assembly (continued)

Ref.	Part Number	Qty.	Description
1	105-1692	1	Battery
2	137-4100	1	Switch-Ignition
3	63-8360	1	Key-Ignition
4	117-1197	1	Solenoid
5	103-5221	1	Switch-PTO
6	110-6765	2	Switch
7	136-4191	1	Harness-Wiring
7:6	109102	1	Fuse-Blade, 25 Amp
7:9	100-4918	1	Diode
7:16	109355	1	Fuse-Blade, 15 Amp
8	32144-4	2	Screw-HWH
9	3256-22	2	Washer-Flat
10	321-3	2	Screw-HH
11	32128-33	2	Nut-HF
12	104-2466	1	Holddown-Battery
13	3220-2	2	Nut-Jam
14	120-2244	1	Hourmeter
15	115-3864	1	Cable-Battery, Positive
16	136-7473	1	Cable-Battery, Positive
17	117-7240	1	Cable-Battery, Negative
18	33003-00	1	Nut-HF
19	3234-14	1	Screw-HHF
21	126-6499	1	Port-Power, 12V
22	99-7408	1	Switch-Reverse
23	98-7249	1	Relay
24	32144-1	1	Screw-Taptite
25	614249	1	Tie-Cable

Deck Assembly

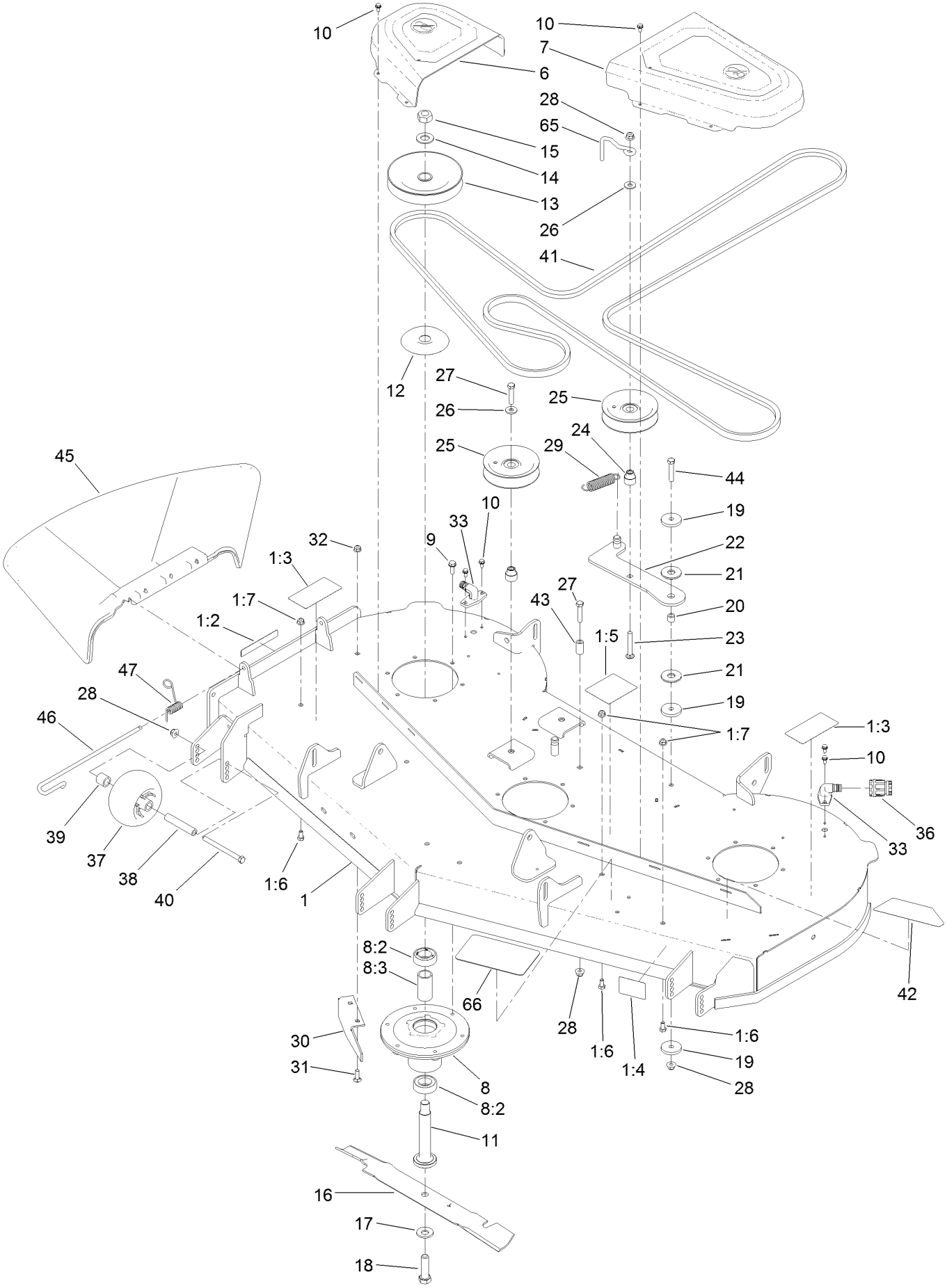

Deck Assembly (continued)

Ref.	Part Number	Qty.	Description
1	133-7069	1	Deck ASM
1:2	130-0731	1	Decal-Danger
1:3	132-0872	2	Decal-Danger, Deck
1:4	130-0765	1	Decal-Scalp, Anti
1:5	117-1194	1	Decal-Routing, Belt
1:6	322-2	3	Screw-HH
1:7	104-8300	3	Nut-HF, NI
6	133-9283	1	Cover-Belt, RH
7	133-9282	1	Cover-Belt, LH
8	120-5477	3	Spindle ASM
8:2	116-0720	2	Bearing-Ball
8:3	115-2641	1	Spacer-Bearing
9	32144-41	18	Screw-Taptite
10	32144-4	12	Screw-HWH
11	115-2642	3	Shaft-Spindle
12	117-7210	3	Shield-Bearing
13	115-4975	3	Pulley
14	7-4150	3	Washer
15	3219-7	3	Nut-Hex
16	115-9649-03	3	Blade-Hi Flow, 20.5 Inch
17	125-1736	3	Washer-Belleville
18	51-4060	3	Screw-Blade
19	110-9981	3	Washer-Plain
20	1-413088	1	Bushing-Lever, Lift
21	114-0463	2	Washer-Friction, Composite
22	115-5054	1	Arm-Idler
23	3231-31	1	Screw-CARR
24	115-2577	3	Bushing-Idler
25	132-4718	3	Pulley-Idler, Flat
26	80-6990	3	Washer-Hardened
27	323-9	3	Screw-HH
28	104-8301	6	Nut-HF, NI
29	108-4056	1	Spring-Extension
30	119-3388-03	1	Baffle-Cutoff
31	3230-22	2	Screw-CARR
32	104-8300	5	Nut-HF, NI
33	133-9289	2	Fitting-Washout
36	95-3270	1	Connector-Hose
37	1-603299	3	Roller-Scalp, Anti
38	98-7912	3	Tube-Spanner
39	104-0892	3	Spacer-Axle, Rear
40	323-23	3	Screw-HH
41	133-4372	1	V-Belt
42	117-5303	1	Decal
43	1-603401	1	Spacer
44	323-10	1	Screw-HH
45	133-1212	1	Deflector-Discharge
46	109-8854	1	Pin-Chute
47	121-2983	1	Spring-Torsion
65	136-5615	1	Guide-Belt, Idler
66	133-9313	1	Tread-Step

Model Specific Decal Assembly

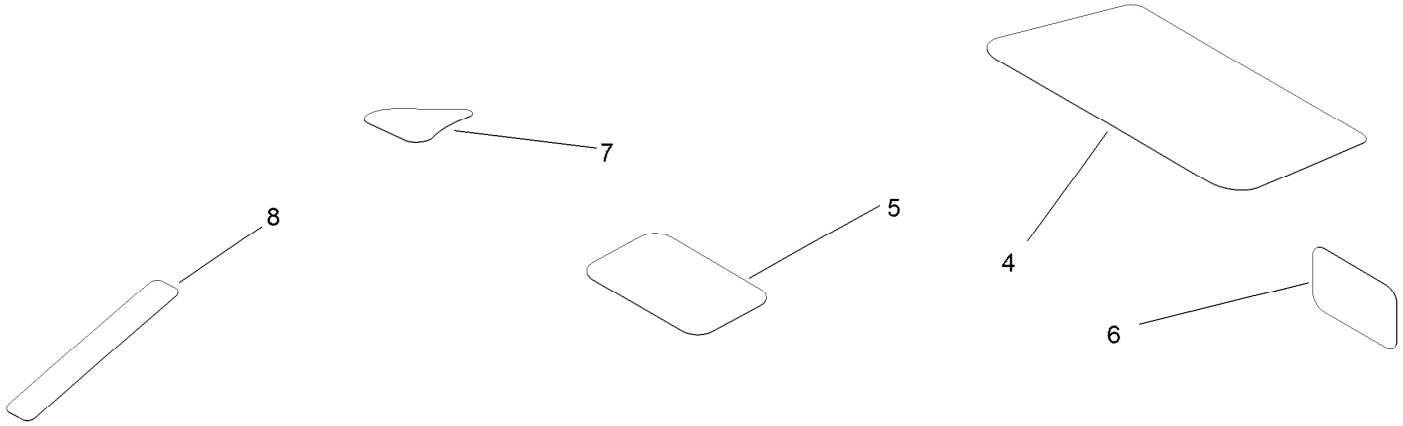

Model Specific Decal Assembly (continued)

Ref.	Part Number	Qty.	Description
4	136-5597	1	Decal-Engine
5	131-4157	1	Decal
6	127-9076	1	Placard-Intake
7	131-1097	1	Decal-Drain, Oil
8	132-0904	1	Decal-Shutdown

Series Decal Assembly

Series Decal Assembly (continued)

Ref.	Part Number	Qty.	Description
1	136-5596	1	Decal-Maintenance
2	136-4245	1	Decal-Smart Speed
3	130-0654	1	Decal-HOC
4	121-5684	1	Decal-Location, Service Dealer

Clutch Assembly

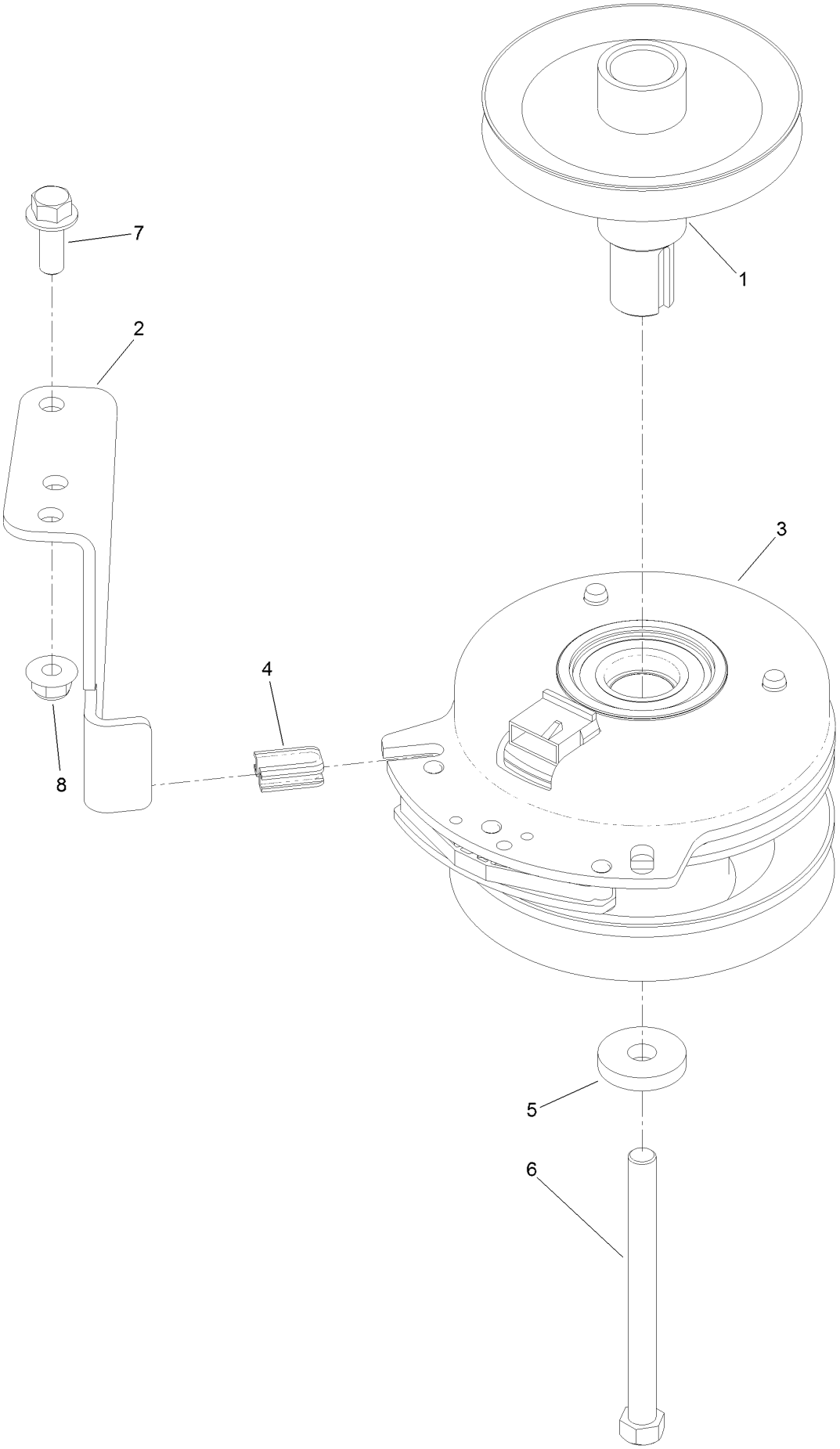

Clutch Assembly (continued)

Ref.	Part Number	Qty.	Description
1	133-1208	1	Pulley-Engine
2	119-8885	1	Stop-Clutch
3	127-3410	1	Clutch-PTO
4	120-2217	1	Isolator-Clutch
5	112843	1	Washer
6	3212-19	1	Screw-HH
7	3234-42	1	Screw-HHF
8	104-8301	1	Nut-HF, NI

Attachments and Accessories

For 75213 TimeCutter HD MR6000 Riding Mower

Product Name	Model/Part
54in/60in Striping Kit	117-5319
Leaf Bagging Enhancement Kit	117-7202
Jack Kit	127-6666
5 Gallon Bucket	133-2533
60in Recycler Kit	136-7490
Mount Kit	136-7491
Weight Kit	136-7492
Light Kit	136-7493
Bucket Mount	136-7494
Rops Kit	136-7495
HD Air Cleaner Kit	136-7860
Jack Mount Kit	136-9200
HD Shock and Spring Kit	137-2042
Cargo Carrier	79040
EZ Vac Complete Twin Bagger	79345

Notes:

Notes:

Notes:

TORO®

Count on it.