Form No. 3422-241 Rev A

TORO®

Count on it.

Parts Catalog

52in Side Discharge Mower

Groundsmaster® 200, 3320 and 3280-D Series Traction Unit

Model No. 30555—Serial No. 401220001 and Up

Register at www.Toro.com.
Original Instructions (EN)

3422-241 A

Ordering Replacement Parts

To order replacement parts, please supply the part number, the quantity, and the description of each part desired.

Understanding Reference Numbers

Each identified part in an illustration has a reference number. The reference number for a part also appears in the parts list, along with other information about the part.

This catalog uses two special reference number formats, one to indicate parts in a service assembly and another to indicate the quantity of a given part in an illustration.

Service Assembly Reference Numbers

Parts in service assemblies have reference numbers in the form a:b. The a represents the reference number of the entire service assembly and the b represents a sequential number unique to each part within the service assembly.

For example, a wheel assembly might be identified by reference number 6, the tire by 6:1, the valve by 6:2, and the wheel by 6:3. When you order the assembly identified by reference number 6, you receive all parts identified by reference numbers 6:1,6:2, and 6:3. However, you may also order any part individually. Reference numbers of this type appear in illustration and in parts lists.

Reference Numbers Indicating Quantity

In an illustration, if a reference number indicates more than one part, the reference number has the form nX y. The n represents the quantity of the part, the X is the multiplication symbol, and the y represents the reference number.

For example, in an illustration, the reference number 2X 37 means that two of the parts identified by reference number 37 are indicated.

Contents

Deck and Spindle Assembly 4
Drive Spindle Assembly No. 27-0870 5
Deck Assembly 6
Cover and Gearbox Assembly 7
Gearbox Assembly No. 131-6083 8
Carrier Frame Assembly 9
Tire and Bearing Assembly No. 68-8970 10
Pivot Pin and Spacer Assembly 11
Attachments and Accessories 12

© 2018—The Toro® Company
8111 Lyndale Avenue South
Bloomington, MN 55420

Contact us at www.Toro.com.
Printed in the USA.
All Rights Reserved

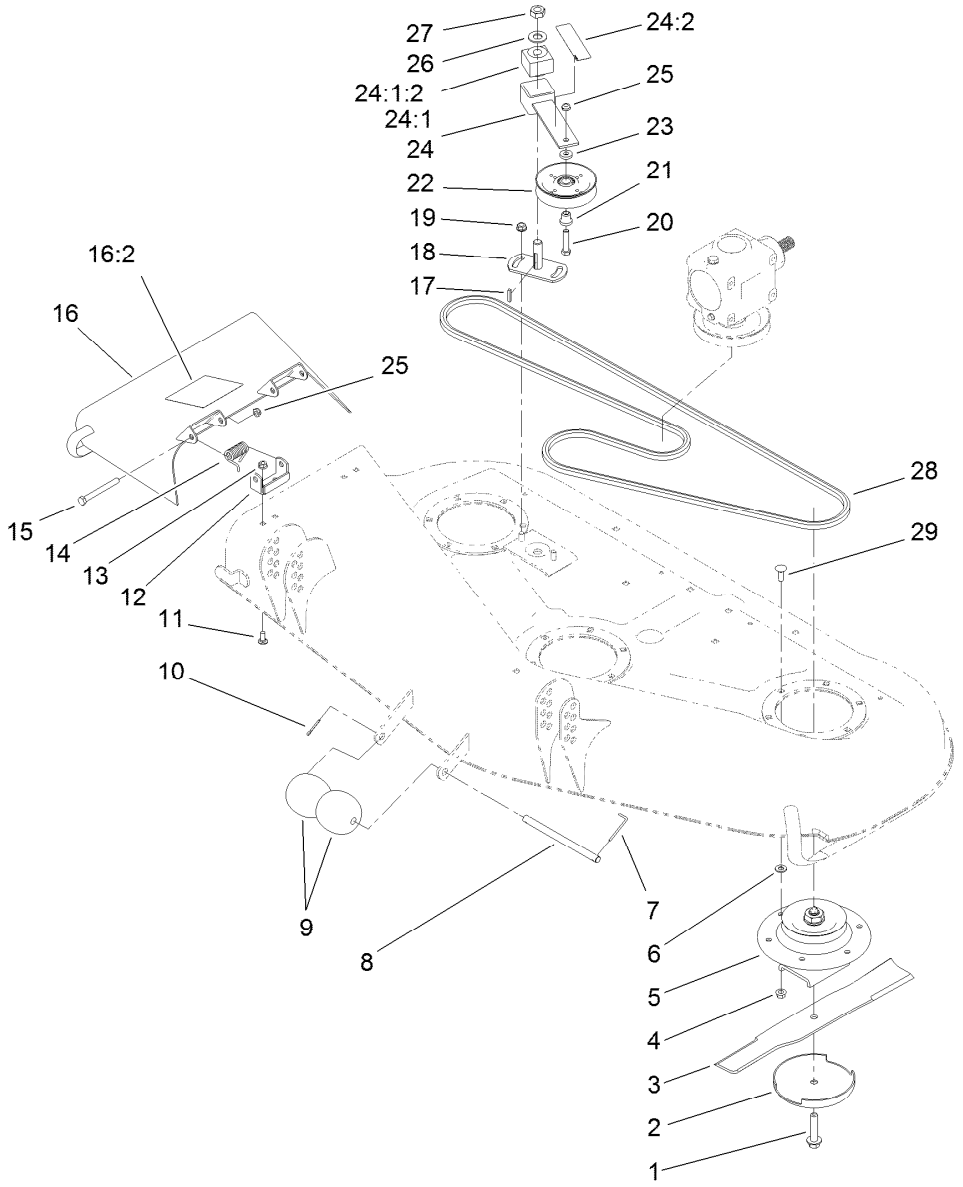

Deck and Spindle Assembly

Ref.	Part Number	Qty.	Description
1	92-5816	3	Bolt-Blade
2	72-9361	3	Cup-Scalp, Anti
3	104-1301	3	Blade-Atomic
3	27-0990-03	3	Blade-18 Inch
3	44-5480	3	Blade-High Sail
3	56-2390-03	3	Blade-18 Inch
4	32128-21	18	Nut-HF
5	27-0870	3	Spindle ASM
6	3256-24	4	Washer-Flat
7	57-0690	1	Pin-Special
8	40-6400	1	Shaft-Roller
9	29-4820	2	Roller
10	3272-11	1	Pin-Cotter
11	3230-23	4	Screw-CARR
12	29-5590-01	2	Bracket-Pivot
13	32128-20	4	Nut-HF
14	40-6230	2	Spring
15	3211-15	2	Screw-HH

Ref.	Part Number	Qty.	Description
16	93-8714	1	Deflector ASM
16:2	120-6604	1	Decal-Danger
17	5-1077	1	Key-Square
18	28-9060	1	Plate-Idler
19	3290-357	2	Nut-HHF, Whiz
20	3211-8	1	Screw-HH
21	65-5950	1	Bushing-Pulley
22	65-5940	1	Pulley-Idler
23	7-0081	1	Washer-Flat
24	100-6178	1	Idler Arm ASM
24:1		1	Arm-Idler ●
24:1:2	27-8490	1	Bushing-Rubber
24:2	117-4979	1	Decal-Warning
25	3296-5	3	Nut-Hex
26	3256-27	1	Washer-Flat
27	3296-33	1	Nut-Lock, NI
28	27-1160	1	V-Belt
29	3231-22	18	Screw-CARR

● Not serviced separately

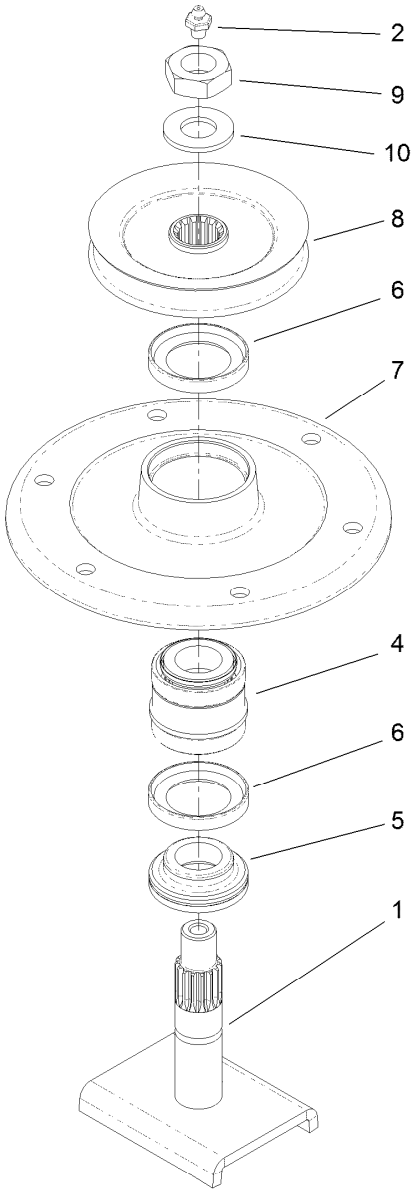

Drive Spindle Assembly No. 27-0870

Ref.	*Part Number*	*Qty.*	*Description*
1	27-0920-03	1	Shaft ASM
2	302-2	1	Fitting-Grease
4	46-8530	1	Bearing ASM
5	27-0950	1	Spacer
6	253-139	2	Seal-Oil
7	61-4160	1	Housing-Spindle
8	27-0970	1	Pulley And Hub ASM
9	32146-20	1	Nut-Hex
10	106-0776	1	Washer-Pinion

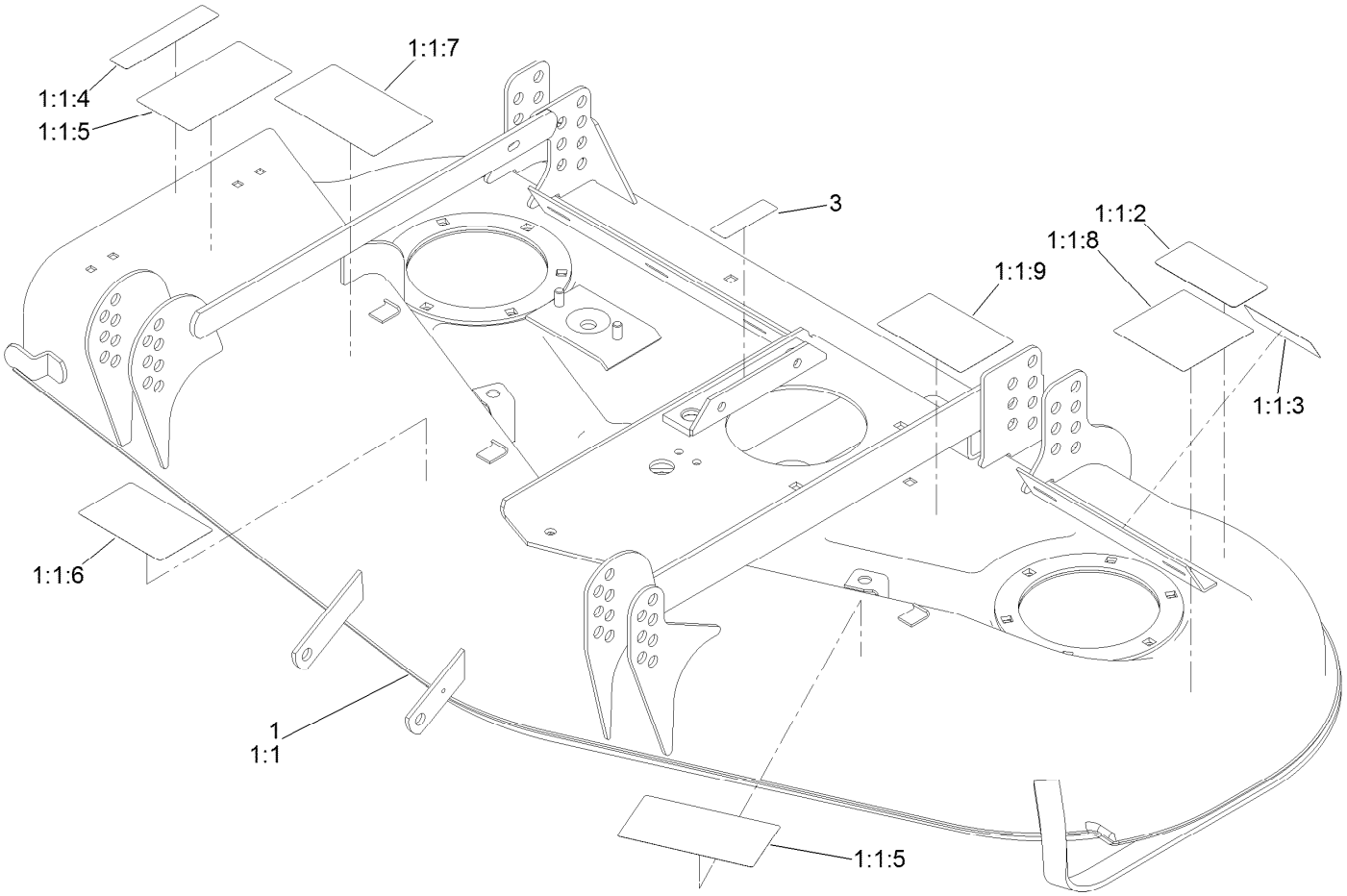

Deck Assembly

Ref.	*Part Number*	*Qty.*	*Description*
1	131-6096	1	52 Inch Deck ASM
1:1		1	Deck ASM ●
1:1:2	93-7818	1	Decal-Torque, Blade Bolt
1:1:3	117-4979	1	Decal-Warning
1:1:4	107-2916	1	Decal-Warning
1:1:5	107-2908	2	Decal-Danger, Combination
1:1:6	51-3960	1	Decal
1:1:7	105-9551	1	Decal-Warning
1:1:8	120-6604	1	Decal-Danger
1:1:9	99-5171	1	Decal-Belt Routing
3	93-6697	1	Decal-Lube

● Not serviced separately

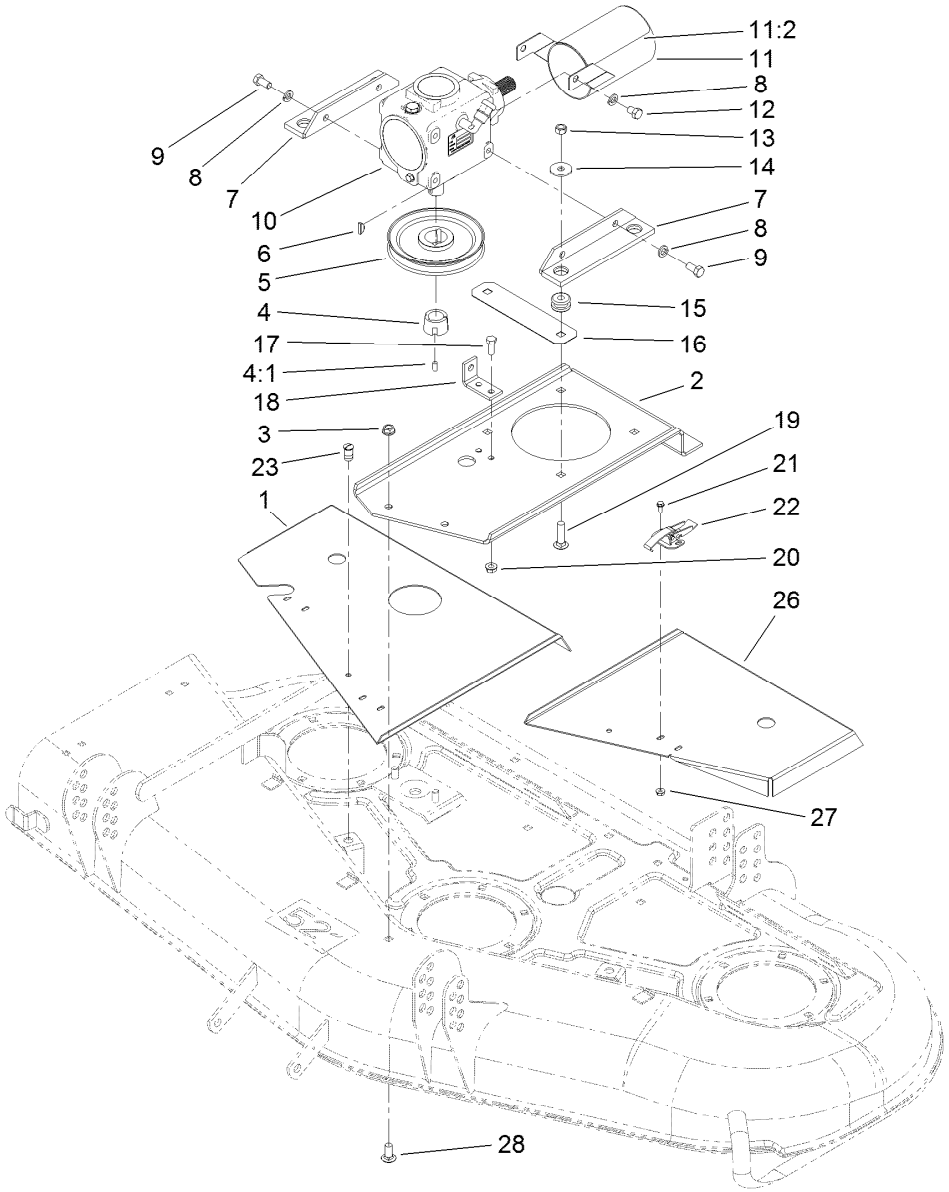

Cover and Gearbox Assembly

Ref.	Part Number	Qty.	Description
1	119-4763-01	1	Cover-Belt, RH
2	72-9230-01	1	Base-Case, Gear
3	3290-357	4	Nut-HHF, Whiz
4	27-6140	1	Bushing-Lock, Taper
4:1	3245-9	2	Screw-Set, HSH
5	63-9900-03	1	Gearbox Pulley ASM
6	3257-5	1	Key-Woodruff
7	68-8560-03	2	Bracket-Gearbox
8	3253-21	6	Washer-Lock
9	323-4	4	Screw-HH
10	131-6083	1	Gearbox ASM
11	107-2904	1	PTO Guard ASM
11:2	107-2915	1	Decal-Danger
12	323-2	2	Screw-HH
13	125-5069	4	Nut-Hex
14	63-8410	4	Washer
15	63-9750	4	Mount
16	68-9890-01	1	Cover-Gearbox, Front
17	322-4	2	Screw-HH
18	72-9240-01	1	Bracket-Extension
19	3231-26	4	Screw-CARR
20	32128-20	2	Nut-HF
21	3290-321	6	Screw-HWH
22	249-21	3	Clamp-Slotted
23	117-6989	2	Fractional Turn Oval Head Stud ASM
26	119-4762-01	1	Cover-Belt, LH
27	32128-17	6	Nut-Lock, Flange
28	3231-27	4	Screw-CARR

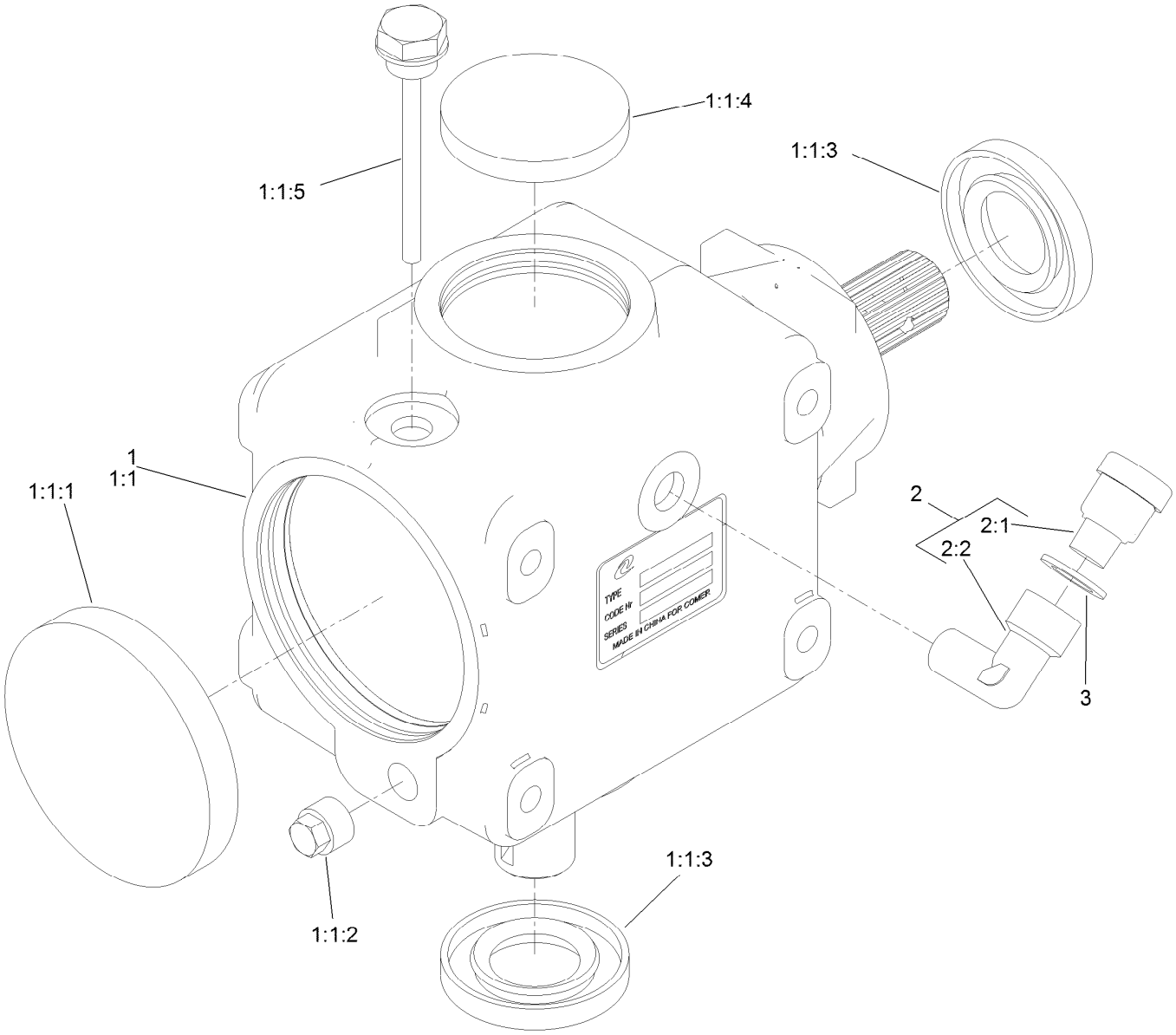

Gearbox Assembly No. 131-6083

Ref.	*Part Number*	*Qty.*	*Description*
1		1	Gearbox ASM ●
1:1		1	Gearbox ASM ●
1:1:1	107-2932	1	Cap-Oil
1:1:2	107-2933	2	Plug
1:1:3	117-9247	2	Seal
1:1:4	107-2935	1	Cap-Oil
1:1:5	110-8283	1	Plug-Filler, Dipstick
2		1	Breather Plug ASM (F/W Gearbox) ●
2:1	131-6920	1	Plug-Breather
2:2	131-6997	1	Elbow-90 DEG
3	130-4899	1	Washer

● Not serviced separately

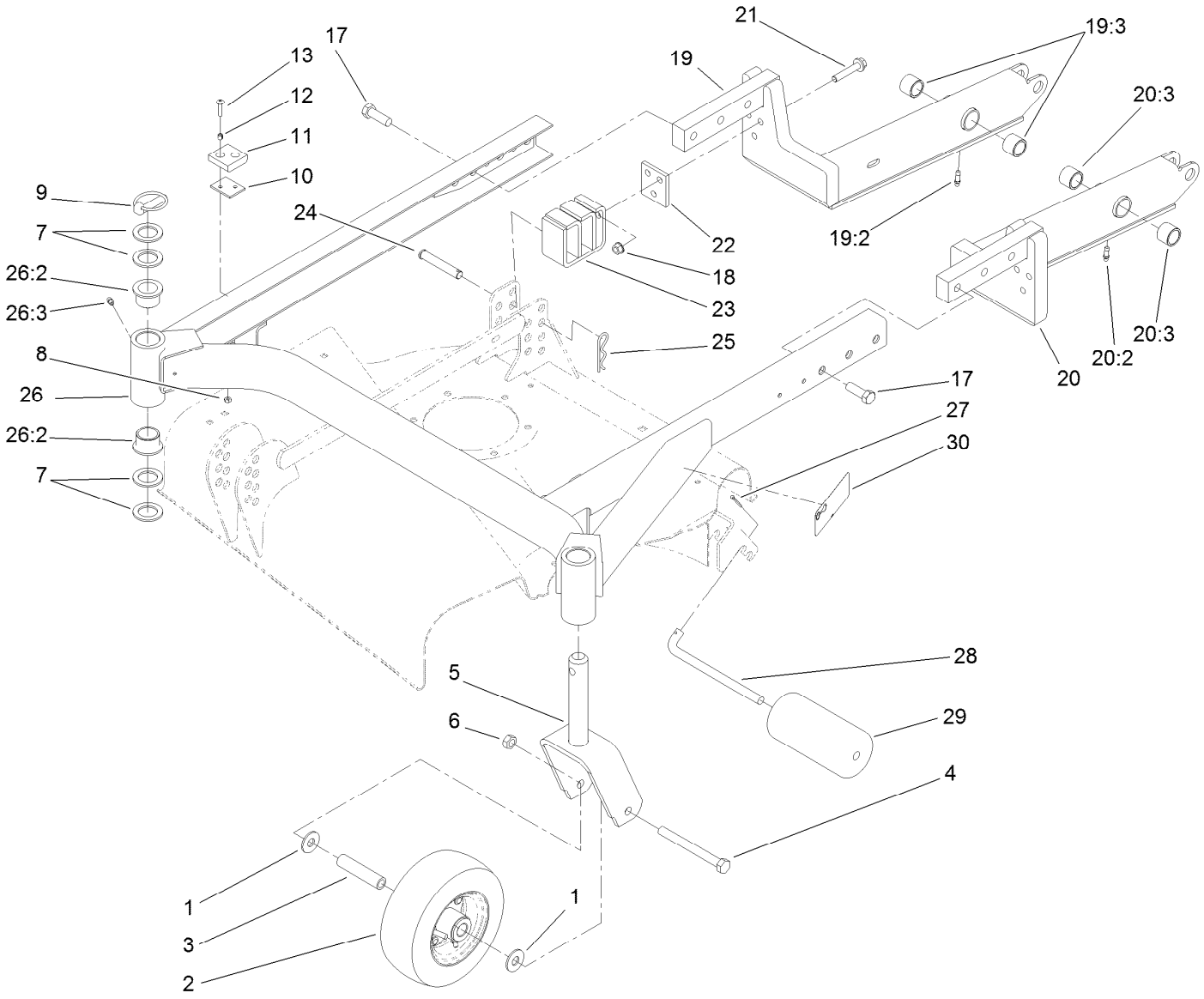

Carrier Frame Assembly

Ref.	Part Number	Qty.	Description
1	3256-6	4	Washer-Flat
2	68-8970	2	Tire And Bearing ASM
3	68-8980	2	Spanner-Tire
4	325-19	2	Screw-HH
5	68-8900-01	2	Front Castor Fork ASM
6	32153-5	2	Nut-Hex
7	3-6781	8	Washer-Thrust
8	3296-2	4	Nut-Lock, NI
9	283-71	2	Pin-Lynch
10	42-6200	3	Shim-Cushion
11	40-0330	2	Cushion-Rubber
12	40-9520	4	Spacer
13	32122-28	4	Screw
17	325-32	6	Screw-HH
18	32128-40	6	Nut-Flange
19	76-3080	1	RH Lift Arm ASM
19:2	302-62	1	Fitting-Grease
19:3	92-5648	2	Bushing
20	76-3090	1	LH Lift Arm ASM
20:2	302-62	1	Fitting-Grease
20:3	92-5648	2	Bushing
21	66-9302	6	Screw-HHF, Whiz
22	83-4580-01	2	Spacer-Cradle
23	83-4520-01	2	Rear Cradle ASM
24	283-55	4	Pin-Clevis
25	3290-355	4	Pin-Hair
26	83-4550	1	52-Inch Carrier Frame ASM
26:2	94-1291	4	Bushing
26:3	302-5	2	Fitting-Grease
27	3272-11	2	Pin-Cotter
28	40-0340	2	Shaft-Roller, Rear
29	36-1740	2	Roller-Deck
30	93-7819	1	Decal-HOC

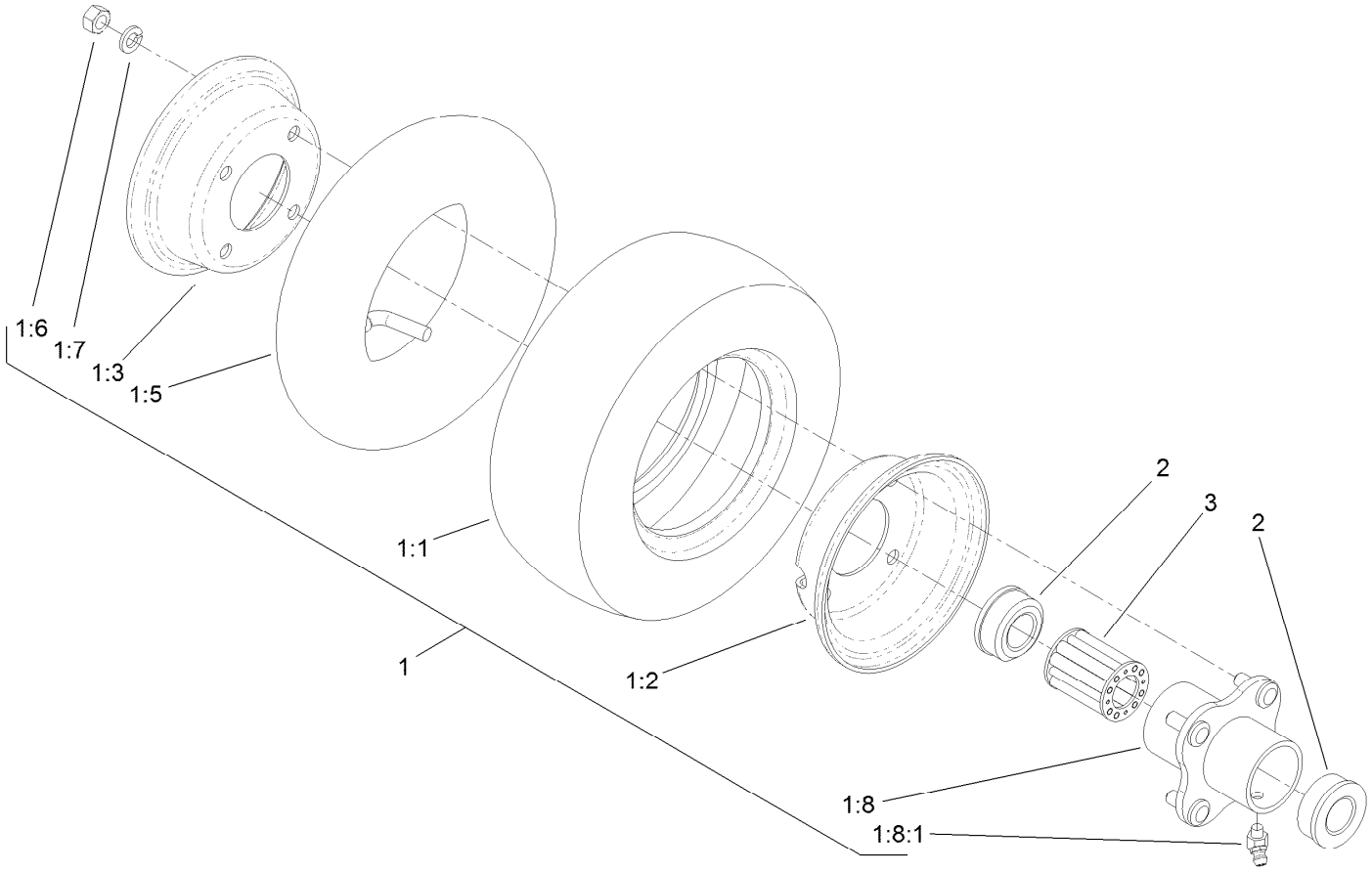

Tire and Bearing Assembly No. 68-8970

Ref.	*Part Number*	*Qty.*	*Description*
1		1	Pneumatic Wheel ASM ●
1:1	68-8960	1	Tire
1:2	68-8920	1	Female Wheel Half
1:3	68-8930	1	Male Wheel Half
1:5	68-8950	1	Tube-Inner (W/Valve)
1:6	3219-2	4	Nut-Hex
1:7	3253-4	4	Washer-Lock
1:8	68-8940	1	Hub-Center
1:8:1	302-11	1	Fitting-Lube, 45 DEG
2	62-5580	2	Bearing-Outside
3	131-5528	1	Bearing-Roller

● Not serviced separately

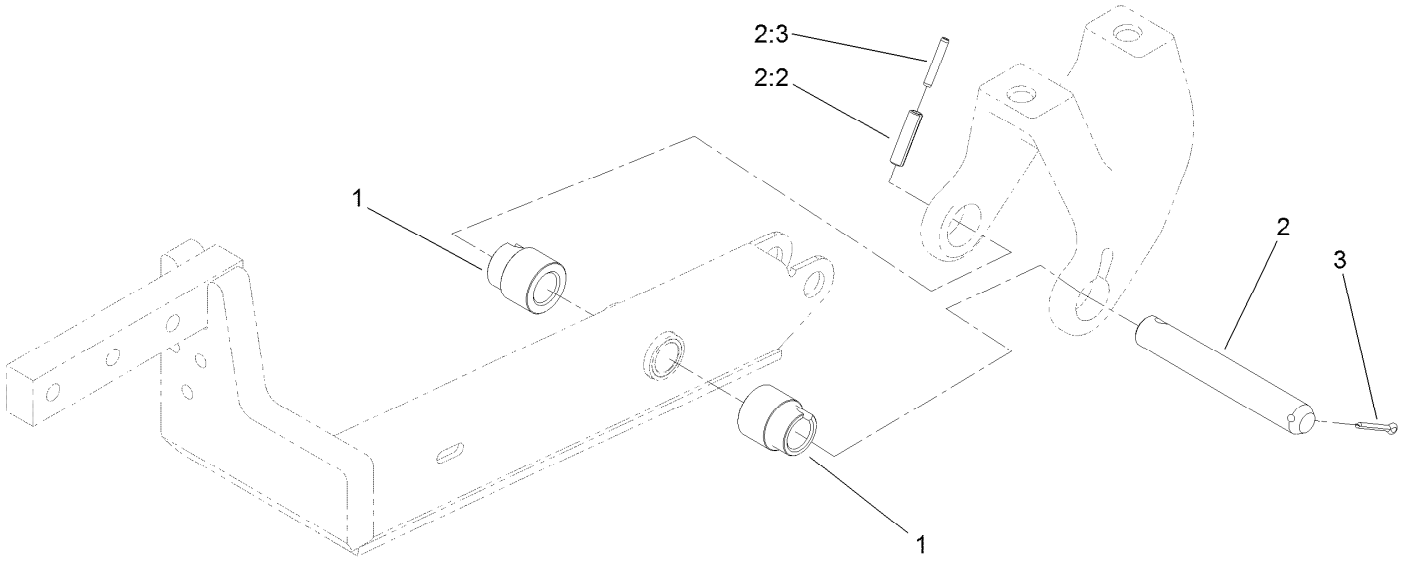

Pivot Pin and Spacer Assembly

Ref.	*Part Number*	*Qty.*	*Description*
1	98-7926	4	Spacer-Lift Arm
2	98-2348	2	Pivot Pin ASM
2:2	32121-49	1	Pin-Roll
2:3	32121-71	1	Pin-Spring
3	3272-17	2	Pin-Cotter

Attachments and Accessories

For 30555 52in Side Discharge Mower Groundsmaster 200, 3320 and 3280-D Series Traction Unit

Product Name	Model/Part
Blade-Atomic	104-1301
18in Blade Service Pack	108-1477
Castor Wheel	27-1050
52 Inch Blower Kit	30502
Blade-High Sail	44-5480
Blade-18in	56-2390-03
Recycler Kit	59225
Tire and Bearing Asm	68-8970
Blade and Belt Kit	95-3070
Caster Wheel Kit	95-3077
Spindle Kit	95-3078

Notes:

Notes:

Notes:



Count on it.