Form No. 3404-576 Rev B

TORO®

Count on it.

Parts Catalog

# Greensmaster® 1000 Mower

**Model No. 04055—Serial No. 316001001 and Up**

Register at www.Toro.com.
Original Instructions (EN)

CE

*3404-576* B

# Ordering Replacement Parts

To order replacement parts, please supply the part number, the quantity, and the description of each part desired.

### Understanding Reference Numbers

Each identified part in an illustration has a reference number. The reference number for a part also appears in the parts list, along with other information about the part.

This catalog uses two special reference number formats, one to indicate parts in a service assembly and another to indicate the quantity of a given part in an illustration.

### Service Assembly Reference Numbers

Parts in service assemblies have reference numbers in the form a:b. The a represents the reference number of the entire service assembly and the b represents a sequential number unique to each part within the service assembly.

For example, a wheel assembly might be identified by reference number 6, the tire by 6:1, the valve by 6:2, and the wheel by 6:3. When you order the assembly identified by reference number 6, you receive all parts identified by reference numbers 6:1,6:2, and 6:3. However, you may also order any part individually. Reference numbers of this type appear in illustration and in parts lists.

### Reference Numbers Indicating Quantity

In an illustration, if a reference number indicates more than one part, the reference number has the form nX y. The n represents the quantity of the part, the X is the multiplication symbol, and the y represents the reference number.

For example, in an illustration, the reference number 2X 37 means that two of the parts identified by reference number 37 are indicated.

# Contents

Frame Assembly . . . . . 4
Engine Mount and Frame Assembly . . . . . 5
Reel Assembly . . . . . 6
Reel Drive Assembly . . . . . 7
Bellcrank Assembly . . . . . 9
Drum Drive Assembly . . . . . 10
Drum and Basket Assembly . . . . . 12
Differential Assembly No. 93-6055 . . . . . 13
Inner Countershaft Assembly . . . . . 14
Outer Crankshaft Assembly . . . . . 15
Engine Assembly . . . . . 16
Handle Assembly . . . . . 17
Crankcase Assembly . . . . . 19
Crankshaft and Piston Assembly . . . . . 20
Intake and Exhaust Assembly . . . . . 21
Air Cleaner Assembly . . . . . 23
Governor Assembly . . . . . 24
Recoil and Shroud Assembly . . . . . 25
Recoil Assembly . . . . . 26
Fuel Tank Assembly . . . . . 27
Carburetor Assembly . . . . . 28
Flywheel and Coil Assembly . . . . . 29
Gear Reduction Assembly . . . . . 30
Attachments and Accessories . . . . . 31

**© 2018—The Toro® Company**
**8111 Lyndale Avenue South**
**Bloomington, MN 55420**



**Contact us at www.Toro.com.**
**Printed in the USA.**
**All Rights Reserved**

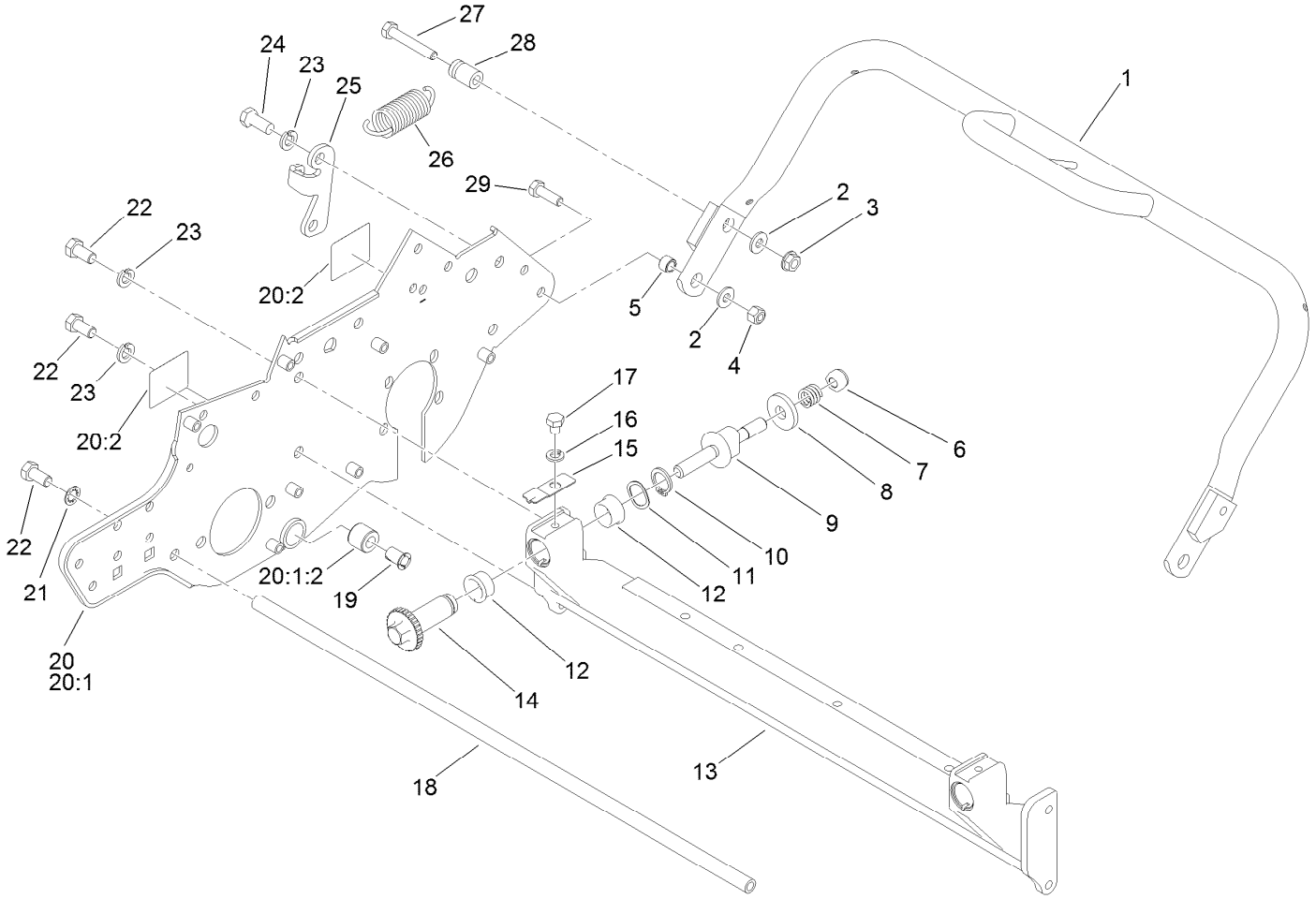


# Frame Assembly

| Ref. | Part Number | Qty. | Description |
|---|---|---|---|
| 1 | 131-2027-03 | 1 | Kickstand |
| 2 | 3256-2 | 3 | Washer-Flat |
| 3 | 32128-25 | 1 | Nut-HF |
| 4 | 3296-29 | 2 | Nut-Lock, NI |
| 5 | 65-7910 | 2 | Spacer |
| 6 | 119-4039 | 2 | Nut-Hex, NI |
| 7 | 119-4156 | 2 | Spring-Compression |
| 8 | 119-4155 | 2 | Washer-Hardened |
| 9 | 115-7039 | 2 | Screw-Adjuster, Bedbar |
| 10 | 32120-93 | 2 | Ring-Retaining |
| 11 | 119-4164 | 2 | Washer-Wave |
| 12 | 106-5344 | 4 | Bushing-Flange, Keyed |
| 13 | 120-2707-01 | 1 | Crossmember |
| 14 | 106-5363 | 2 | Shaft-Adjuster |
| 15 | 99-2097 | 2 | Detent |
| 16 | 3253-4 | 2 | Washer-Lock |
| 17 | 322-26 | 2 | Screw-HH |

| Ref. | Part Number | Qty. | Description |
|---|---|---|---|
| 18 | 88-7110 | 1 | Rod-Support, Frame |
| 19 | 52-2890 | 1 | Bushing-Nylon |
| 20 | 93-6093 | 1 | RH Side Plate ASM |
| 20:1 | | 1 | RH Sideplate/Bushing ASM ● |
| 20:1:2 | 63-9510 | 1 | Bushing |
| 20:2 | 93-9356 | 2 | Decal-Warning, Belt |
| 20:2 | 93-9389 | 2 | Decal-Warning, Belt (Japan) |
| 21 | 3254-6 | 2 | Washer-Lock, Internal |
| 22 | 323-4 | 6 | Screw-HH |
| 23 | 3253-21 | 4 | Washer-Lock |
| 24 | 323-5 | 2 | Screw-HH |
| 25 | 65-7890 | 1 | Bracket |
| 26 | 65-7880 | 1 | Spring-Extension |
| 27 | 322-10 | 1 | Screw-HH |
| 28 | 65-7900 | 1 | Retainer-Spring |
| 29 | 322-5 | 2 | Screw-HH |

● Not serviced separately

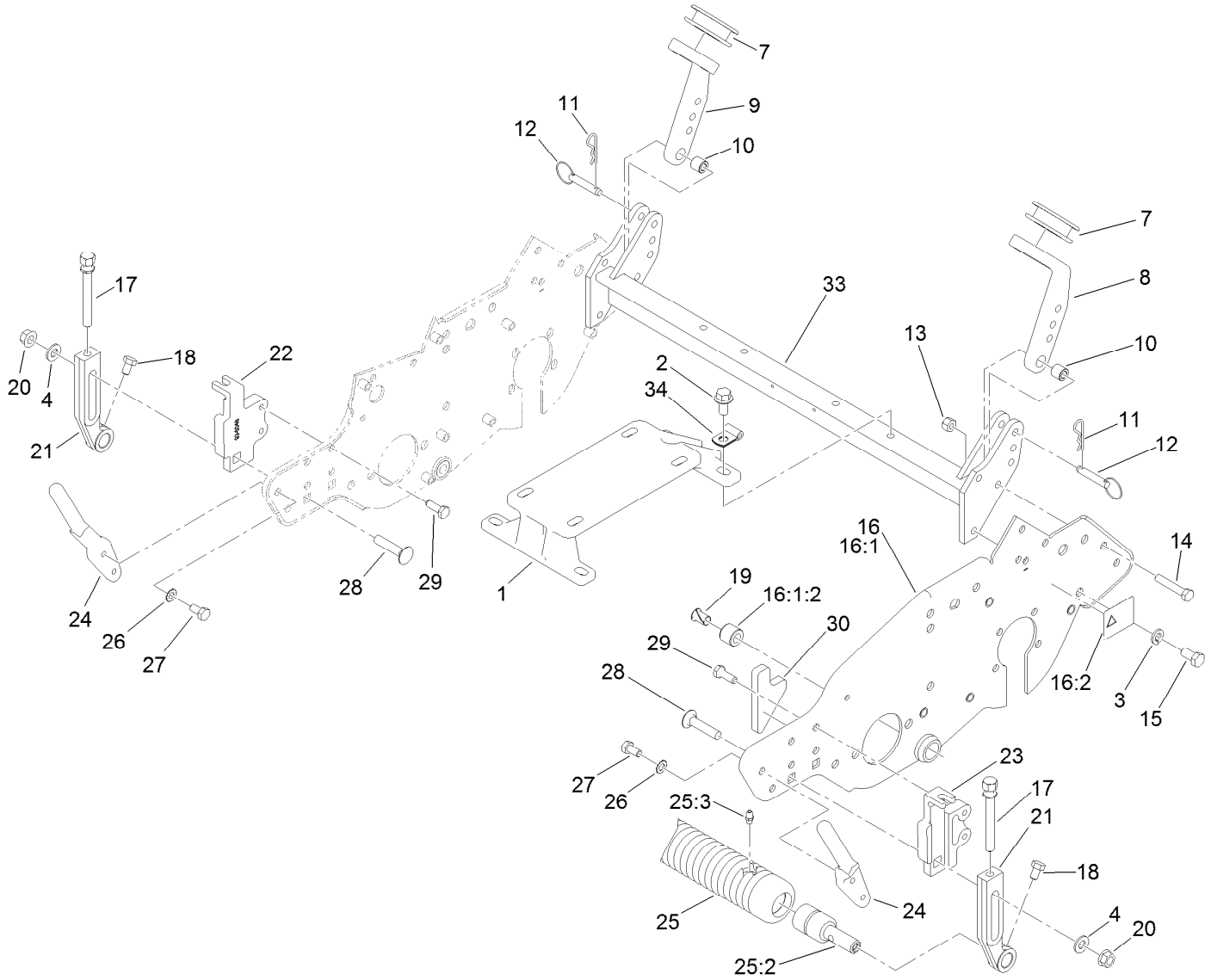


# Engine Mount and Frame Assembly

| Ref. | Part Number | Qty. | Description |
|---|---|---|---|
| 1 | 120-2677 | 1 | Mount-Engine |
| 2 | 3234-1 | 4 | Screw-HHF |
| 3 | 3253-21 | 4 | Washer-Lock |
| 4 | 3256-24 | 2 | Washer-Flat |
| 7 | 65-7510 | 2 | Grommet-Handle |
| 8 | 93-6038 | 1 | Arm-Support, Handle (LH) |
| 9 | 93-6037 | 1 | Arm-Support, Handle (RH) |
| 10 | 93-6024 | 2 | Bushing-Support, Handle |
| 11 | 3290-467 | 2 | Pin-Hair |
| 12 | 93-6029 | 2 | Pin-Clevis, Ring |
| 13 | 3296-29 | 2 | Nut-Lock, NI |
| 14 | 322-9 | 2 | Screw-HH |
| 15 | 323-4 | 2 | Screw-HH |
| 16 | 93-6094 | 1 | LH Side Plate ASM |
| 16:1 | | 1 | LH Sideplate/Bushing ASM ● |
| 16:1:2 | 63-9510 | 1 | Bushing |
| 16:2 | 93-9356 | 1 | Decal-Warning, Belt |
| 16:2 | 93-9389 | 1 | Decal-Warning, Belt (Japan) |

| Ref. | Part Number | Qty. | Description |
|---|---|---|---|
| 17 | 93-6051 | 2 | Screw-HOC |
| 18 | 322-1 | 2 | Screw-HH |
| 19 | 52-2890 | 1 | Bushing-Nylon |
| 20 | 32128-21 | 2 | Nut-HF |
| 21 | 93-6090 | 2 | Arm-HOC |
| 22 | 93-6048 | 1 | Bracket-HOC, RH |
| 23 | 93-6049 | 1 | Bracket-HOC, LH |
| 24 | 65-8570 | 2 | Rod-Mounting |
| 25 | 99-6241 | 1 | Wiehle Roller ASM (.20 Inch Spacing) |
| 25:2 | 52-3180 | 2 | Bearing-Roller, Front |
| 25:3 | 302-5 | 2 | Fitting-Grease |
| 26 | 3255-8 | 4 | Washer-Lock |
| 27 | 322-2 | 4 | Screw-HH |
| 28 | 3231-5 | 2 | Screw-CARR |
| 29 | 92-8914 | 4 | Bolt-Face, Tapered |
| 30 | 93-6064 | 1 | Seal-Catcher, Grass |
| 33 | 120-2711-01 | 1 | Rear Frame ASM |
| 34 | 133-2367 | 1 | Clip |

● Not serviced separately

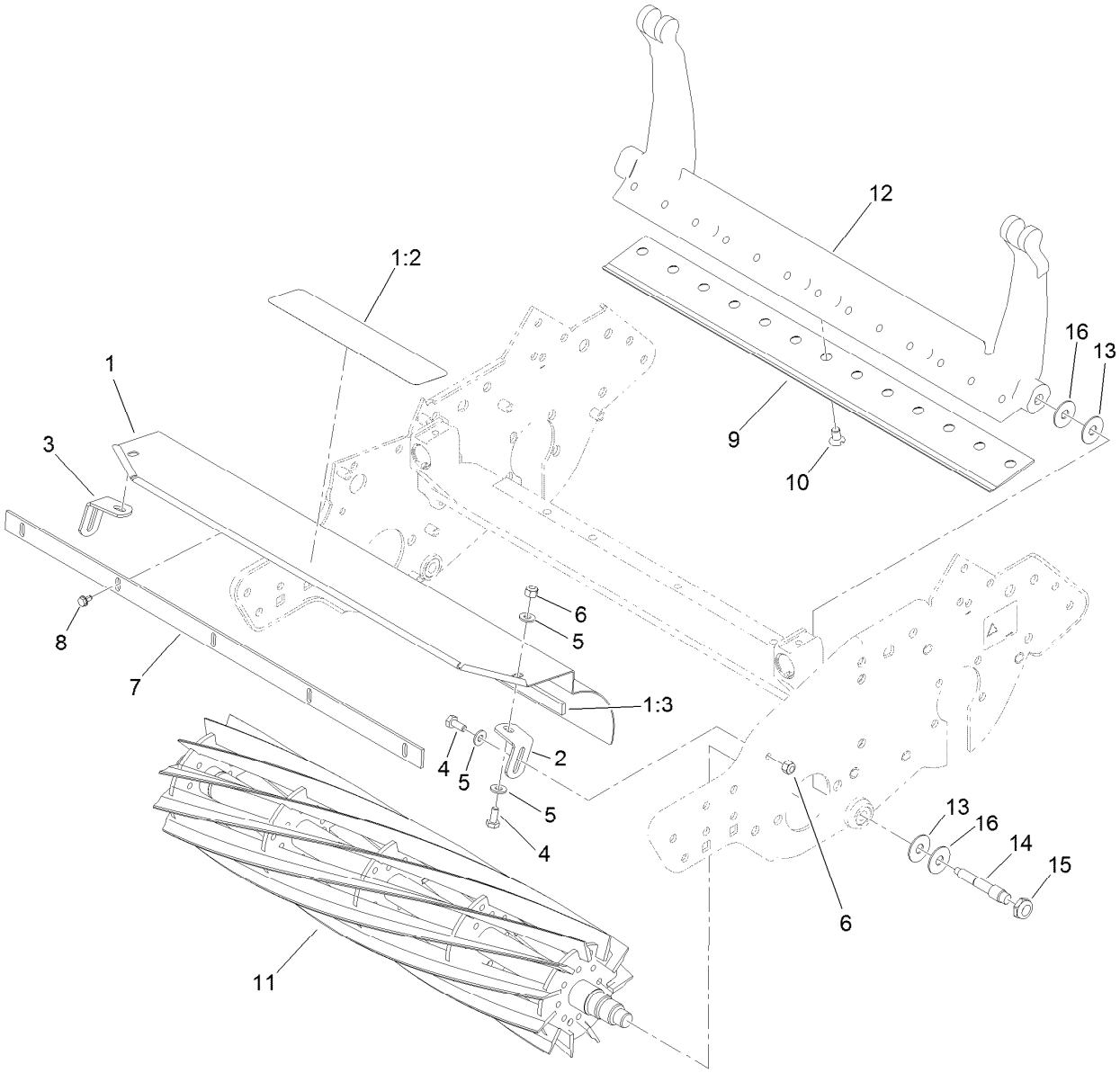


# Reel Assembly

| Ref. | Part Number | Qty. | Description |
|---|---|---|---|
| 1 | 112-9471 | 1 | Grass Shield ASM |
| 1:2 | 84-6560 | 1 | Decal-Warning (Japan) |
| 1:2 | 93-8064 | 1 | Decal-Danger, CE |
| 1:3 | 106-2619 | 1 | Strip-Seal |
| 2 | 65-6450 | 1 | Bracket-LH |
| 3 | 65-6460 | 1 | Bracket-RH |
| 4 | 321-3 | 4 | Screw-HH |
| 5 | 3256-22 | 6 | Washer-Flat |
| 6 | 3296-42 | 4 | Nut-Lock, NI |
| 7 | 36-7260 | 1 | Bar-Off, Cut |
| 8 | 104-2065 | 5 | Screw-HWH |
| 9 | 108-4302 | 1 | Bedknife-Tournament, Extended ● |
| 9 | 108-4303 | 1 | Bedknife-Microcut, Extended ● |
| 9 | 112-7475 | 1 | Bedknife-Edgemax (21 Inch Fairway) ● |
| 9 | 115-1880 | 1 | Bedknife-Edgemax, Microcut |
| 9 | 115-1881 | 1 | Bedknife-Edgemax, Tournament ● |
| 9 | 63-8600 | 1 | Bedknife-Fairway ● |
| 9 | 93-4262 | 1 | Bedknife-Microcut ● |
| 9 | 93-4263 | 1 | Bedknife-Tournament Cut ● |
| 9 | 93-4264 | 1 | Bedknife-Low Cut ● |
| 9 | 94-6392 | 1 | Bedknife-Highcut ● |
| 10 | 119-4151 | 13 | Screw-Bedknife |
| 11 | 132-7312 | 1 | 8 Blade Reel ASM (Optional Equipment) |
| 11 | 132-7313 | 1 | ES 11 Blade Reel ASM |
| 11 | 132-7314 | 1 | 14 Blade Reel ASM (Optional Equipment) |
| 12 | 112-9279-03 | 1 | Bedbar-Aggressive |
| 12 | 112-9281-01 | 1 | Bedbar-Standard |
| 13 | 52-2900 | 4 | Washer-Plastic |
| 14 | 117-9493 | 2 | Bolt-Bedbar |
| 15 | 3296-28 | 2 | Nut-Lock, NI |
| 16 | 52-2860 | 4 | Washer |

● Optional Equipment

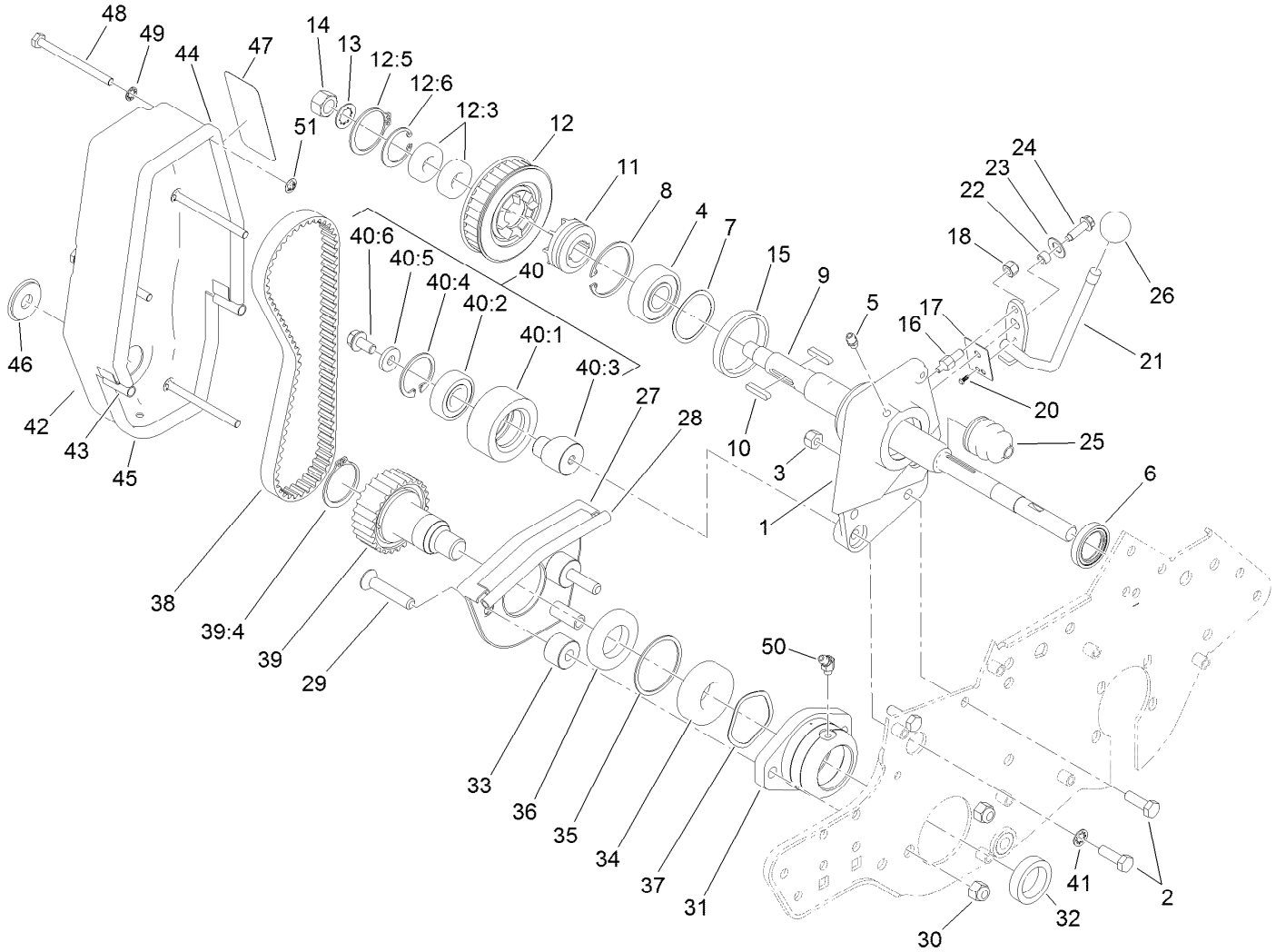


# Reel Drive Assembly

| Ref. | Part Number | Qty. | Description |
|---|---|---|---|
| 1 | 120-3180 | 1 | Housing-Clutch |
| 2 | 322-5 | 3 | Screw-HH |
| 3 | 3296-29 | 2 | Nut-Lock, NI |
| 4 | 251-318 | 1 | Bearing-Ball |
| 5 | 302-5 | 1 | Fitting-Grease |
| 6 | 253-118 | 1 | Seal-Oil |
| 7 | 88-7720 | 1 | Spring-Wave |
| 8 | 32151-75 | 1 | Ring-Retaining |
| 9 | 93-6056 | 1 | Shaft-Power |
| 10 | 88-7150 | 2 | Key-Square |
| 11 | 65-6940 | 1 | Clutch-Slider, Jaw |
| 12 | 88-7830 | 1 | Clutch And Pulley ASM |
| 12:3 | 251-336 | 2 | Bearing-Ball |
| 12:5 | 32151-95 | 1 | Ring-Retaining |
| 12:6 | 32151-89 | 1 | Ring-Retaining, Bowed |
| 13 | 3254-4 | 1 | Washer-Lock/Int |
| 14 | 3219-5 | 1 | Nut-Hex |
| 15 | 65-6970 | 1 | Seal-Felt |
| 16 | 93-9014 | 1 | Pin-Clutch, Actuator |
| 17 | 65-6290 | 1 | Spring-Detent, Clutch |
| 18 | 3296-42 | 1 | Nut-Lock, NI |

| Ref. | Part Number | Qty. | Description |
|---|---|---|---|
| 20 | 95-5731 | 1 | Screw-Drive |
| 21 | 88-7170 | 1 | Lever-Clutch |
| 22 | 88-7860 | 1 | Spacer |
| 23 | 3290-414 | 1 | Washer-Belleville |
| 24 | 80-0700 | 1 | Screw-HH, Torx |
| 25 | 65-8960 | 1 | Boot-Clutch |
| 26 | 233-69 | 1 | Knob |
| 27 | 65-7190-01 | 1 | Cover-Arm |
| 28 | 65-7131 | 1 | Seal-Cover, Strip |
| 29 | 3289-23 | 2 | Capscrew |
| 30 | 3296-39 | 2 | Nut-Lock, NI |
| 31 | 65-8640 | 1 | Housing-Bearing |
| 32 | 253-96 | 1 | Seal-Oil |
| 33 | 65-8290 | 2 | Standoff-Cover |
| 34 | 251-342 | 1 | Bearing-Ball |
| 35 | 32151-92 | 1 | Ring-Retaining |
| 36 | 253-163 | 1 | Seal |
| 37 | 3290-485 | 1 | Washer-Wave |
| 38 | 65-6200 | 1 | Belt |
| 39 | 88-7840 | 1 | Pulley And Drive ASM |
| 39:4 | 32151-95 | 1 | Ring-Retaining |

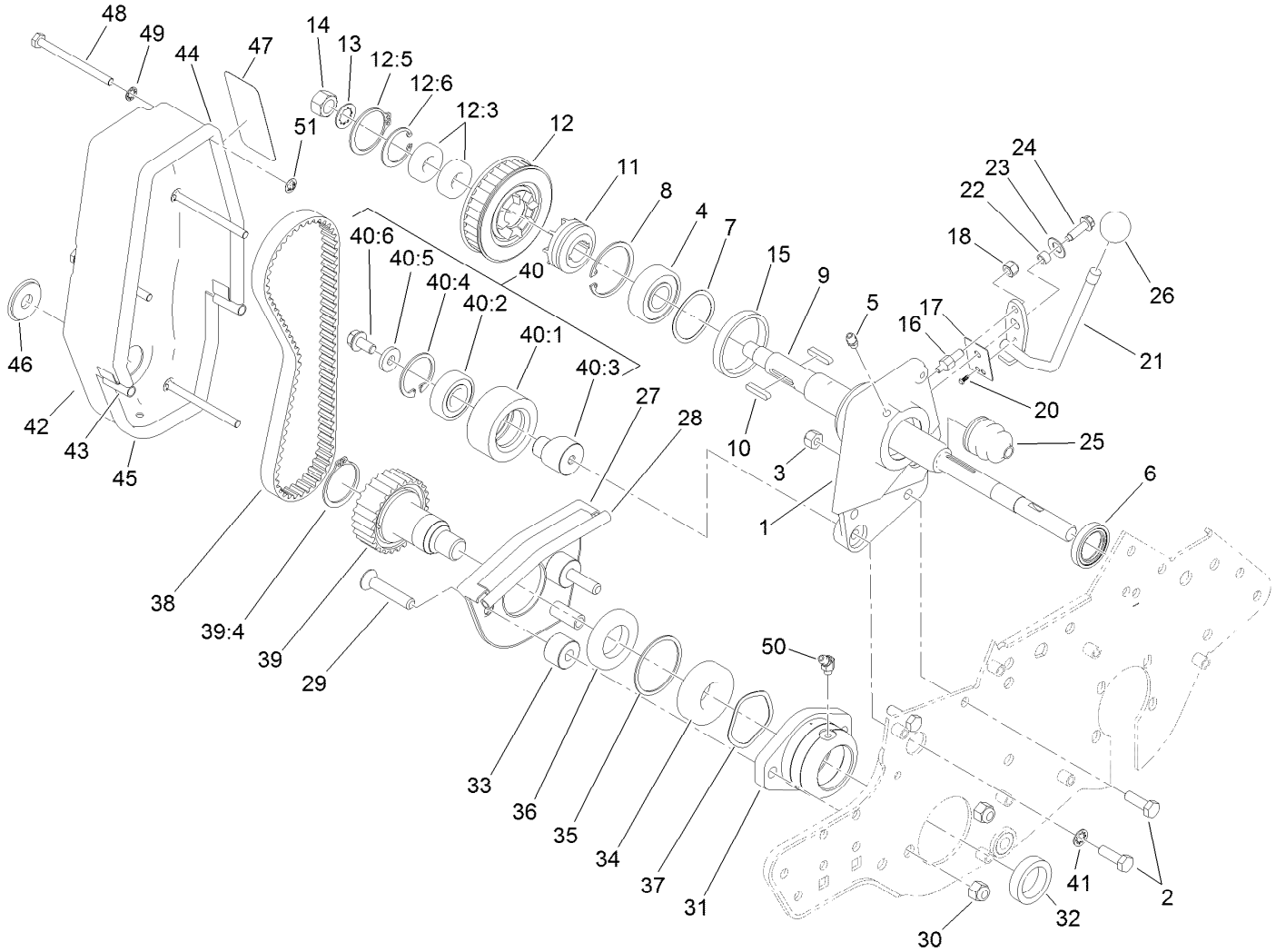


# Reel Drive Assembly (continued)

| Ref. | Part Number | Qty. | Description |
|---|---|---|---|
| 40 | 88-7850 | 1 | Idler Pulley ASM |
| 40:1 | 88-7180 | 1 | Pulley-Idler |
| 40:2 | 38-7820 | 1 | Bearing-Ball |
| 40:3 | 88-7190 | 1 | Spacer |
| 40:4 | 32120-42 | 1 | Ring-Retaining |
| 40:5 | 88-7200 | 1 | Washer-Flat |
| 40:6 | 3234-14 | 1 | Screw-HHF |
| 41 | 3254-2 | 1 | Washer-Lock, Internal |
| 42 | 88-7700-01 | 1 | Cover-Drive, Reel |
| 43 | 88-7770 | 2 | Strip-Seal, Front |

| Ref. | Part Number | Qty. | Description |
|---|---|---|---|
| 44 | 88-7790 | 1 | Strip-Seal, Upper |
| 45 | 88-7800 | 1 | Strip-Seal, Lower |
| 46 | 237-160 | 1 | Plug-Rubber |
| 47 | 92-4817 | 1 | Decal-Engagement, Reel (Japan) |
| 47 | 93-7346 | 1 | Decal-Engagement, Reel |
| 48 | 321-20 | 4 | Screw-HH |
| 49 | 3254-8 | 4 | Washer-Lock |
| 50 | 302-11 | 1 | Fitting-Lube, 45 DEG |
| 51 | 106-8737 | 4 | Nut-Retainer |

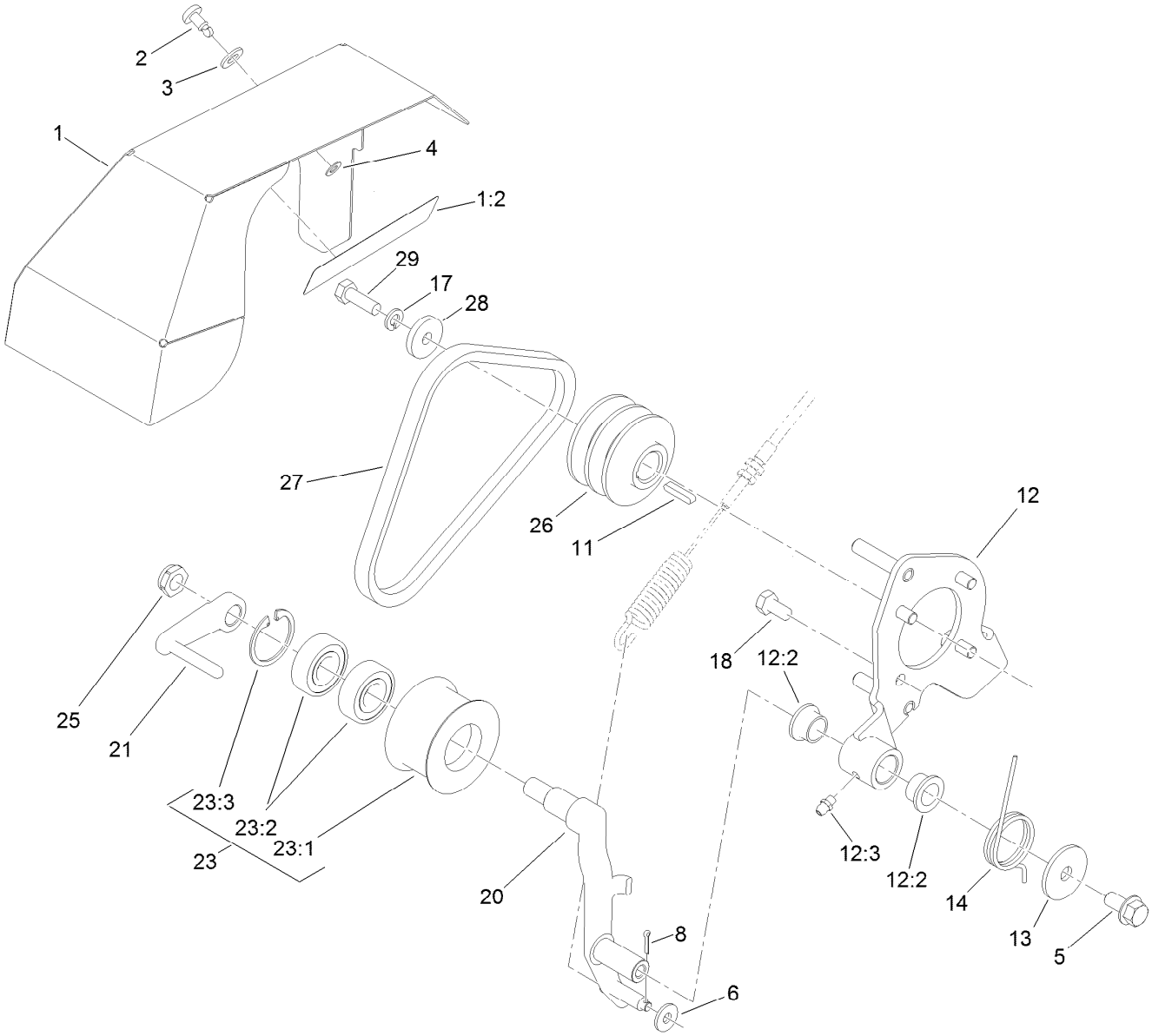


# Bellcrank Assembly

| Ref. | Part Number | Qty. | Description |
|---|---|---|---|
| 1 | 131-8783 | 1 | Bellcrank Cover ASM |
| 1:2 | 125-5245 | 1 | Decal-Danger, Shields |
| 2 | 93-6074 | 1 | Stud |
| 3 | 3256-70 | 1 | Washer-Flat |
| 4 | 93-6073 | 1 | Washer-Nylon |
| 5 | 110-1718 | 1 | Screw-HHF |
| 6 | 3256-78 | 1 | Washer-Flat |
| 8 | 3272-5 | 1 | Pin-Cotter |
| 11 | 88-7150 | 1 | Key-Square |
| 12 | 125-5210 | 1 | Clutch Bracket ASM |
| 12:2 | 65-8770 | 2 | Bushing-Bellcrank |
| 12:3 | 302-5 | 1 | Fitting-Grease |
| 13 | 93-6099 | 1 | Washer |
| 14 | 93-6012 | 1 | Spring-Torque, Clutch Lever |

| Ref. | Part Number | Qty. | Description |
|---|---|---|---|
| 17 | 3253-4 | 1 | Washer-Lock |
| 18 | 99-5132 | 4 | Bolt |
| 20 | 127-2235 | 1 | Lever-Clutch |
| 21 | 112-9390 | 1 | Guide-Belt |
| 23 | 112-9385 | 1 | Idler Pulley ASM |
| 23:1 | 98-7297 | 1 | Pulley-Idler |
| 23:2 | 38-7820 | 2 | Bearing-Ball |
| 23:3 | 32120-42 | 1 | Ring-Retaining |
| 25 | 3296-45 | 1 | Nut-Lock, NI |
| 26 | 115-7306 | 1 | Pulley-Drive, Input |
| 27 | 92-9218 | 1 | Belt-V, Matched Set |
| 28 | 65-8270 | 1 | Washer |
| 29 | 33114-025 | 1 | Screw-HH |

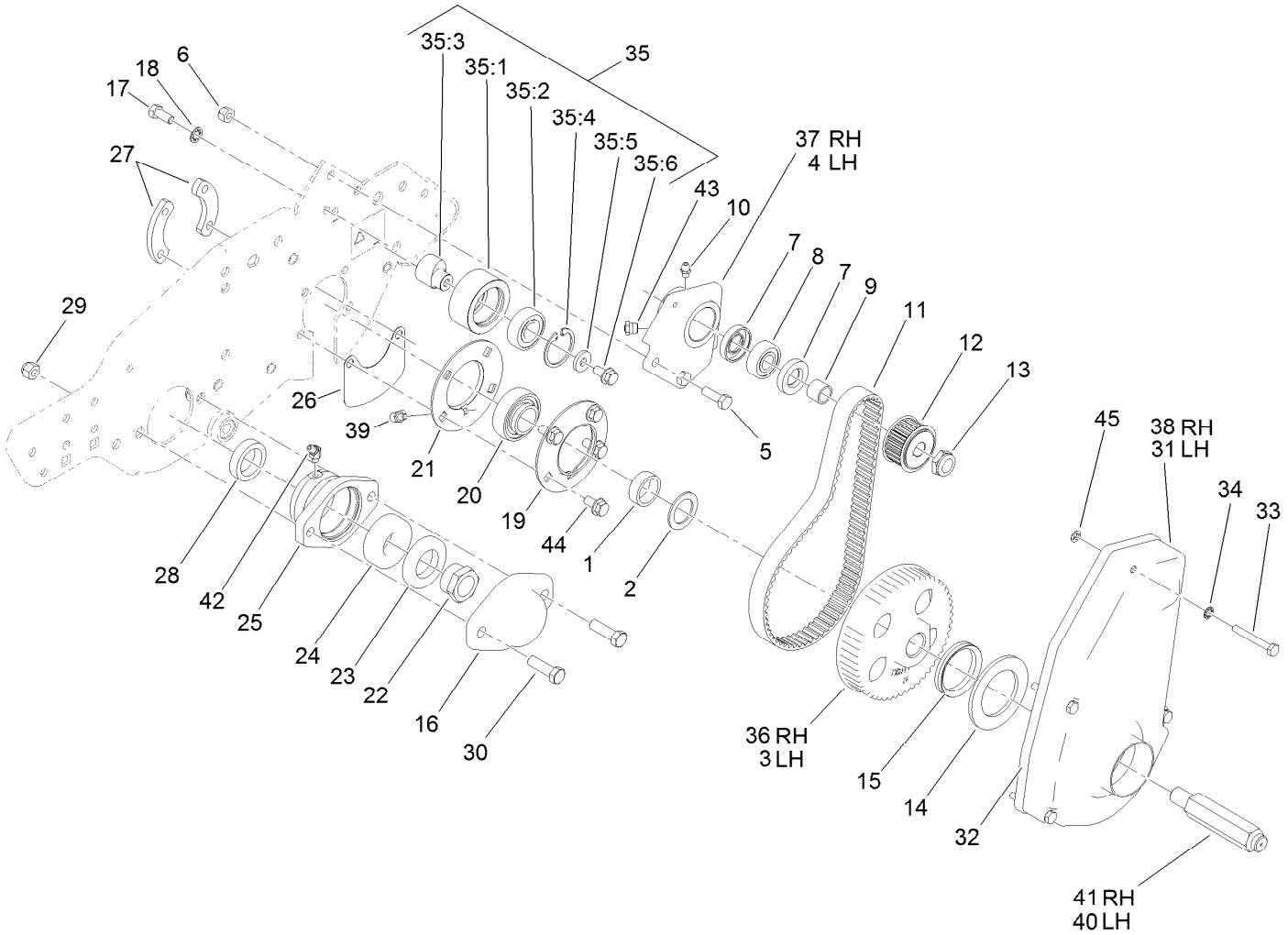


# Drum Drive Assembly

| Ref. | Part Number | Qty. | Description |
|---|---|---|---|
| 1 | 88-7530 | 2 | Spacer |
| 2 | 88-7540 | 2 | Washer-Backup |
| 3 | 105-5365 | 1 | Pulley-Drum, LH |
| 4 | 108-9414 | 1 | Housing-Support, Differential (LH) |
| 5 | 322-5 | 4 | Screw-HH |
| 6 | 3296-29 | 4 | Nut-Lock, NI |
| 7 | 253-160 | 4 | Seal-Grease |
| 8 | 251-338 | 2 | Bearing-Ball |
| 9 | 86-7130 | 2 | Spacer-Pulley |
| 10 | 302-5 | 2 | Fitting-Grease |
| 11 | 65-6210 | 2 | Belt |
| 12 | 65-6660 | 2 | Pulley |
| 13 | 3296-57 | 2 | Nut-Lock, NI |
| 14 | 94-9018 | 2 | Washer-Plastic |
| 15 | 253-161 | 2 | Seal-V-Ring |
| 16 | 65-6220-01 | 1 | Cover-End, Reel |
| 17 | 322-2 | 2 | Screw-HH |
| 18 | 3254-2 | 2 | Washer-Lock, Internal |
| 19 | 120-2739 | 2 | Flangette |
| 20 | 88-7880 | 2 | Bearing |

| Ref. | Part Number | Qty. | Description |
|---|---|---|---|
| 21 | 95-0923 | 2 | Flangette |
| 22 | 92-7302 | 1 | Nut-Lock, Bearing |
| 23 | 253-163 | 1 | Seal |
| 24 | 251-342 | 1 | Bearing-Ball |
| 25 | 65-8640 | 1 | Housing-Bearing |
| 26 | 65-8720 | 2 | Closure-Plate, Side |
| 27 | 65-8730 | 4 | Clamp-Bearing |
| 28 | 253-96 | 1 | Seal-Oil |
| 29 | 3296-39 | 2 | Nut-Lock, NI |
| 30 | 323-7 | 2 | Screw-HH |
| 31 | 88-7680-01 | 1 | Cover-Belt Drum, LH |
| 32 | 88-7810 | 2 | Seal-Strip, Drum Cover |
| 33 | 321-11 | 8 | Screw-HH |
| 34 | 3254-8 | 8 | Washer-Lock |
| 35 | 88-7850 | 2 | Idler Pulley ASM |
| 35:1 | 88-7180 | 1 | Pulley-Idler |
| 35:2 | 38-7820 | 1 | Bearing-Ball |
| 35:3 | 88-7190 | 1 | Spacer |
| 35:4 | 32120-42 | 1 | Ring-Retaining |
| 35:5 | 88-7200 | 1 | Washer-Flat |
| 35:6 | 3234-14 | 1 | Screw-HHF |

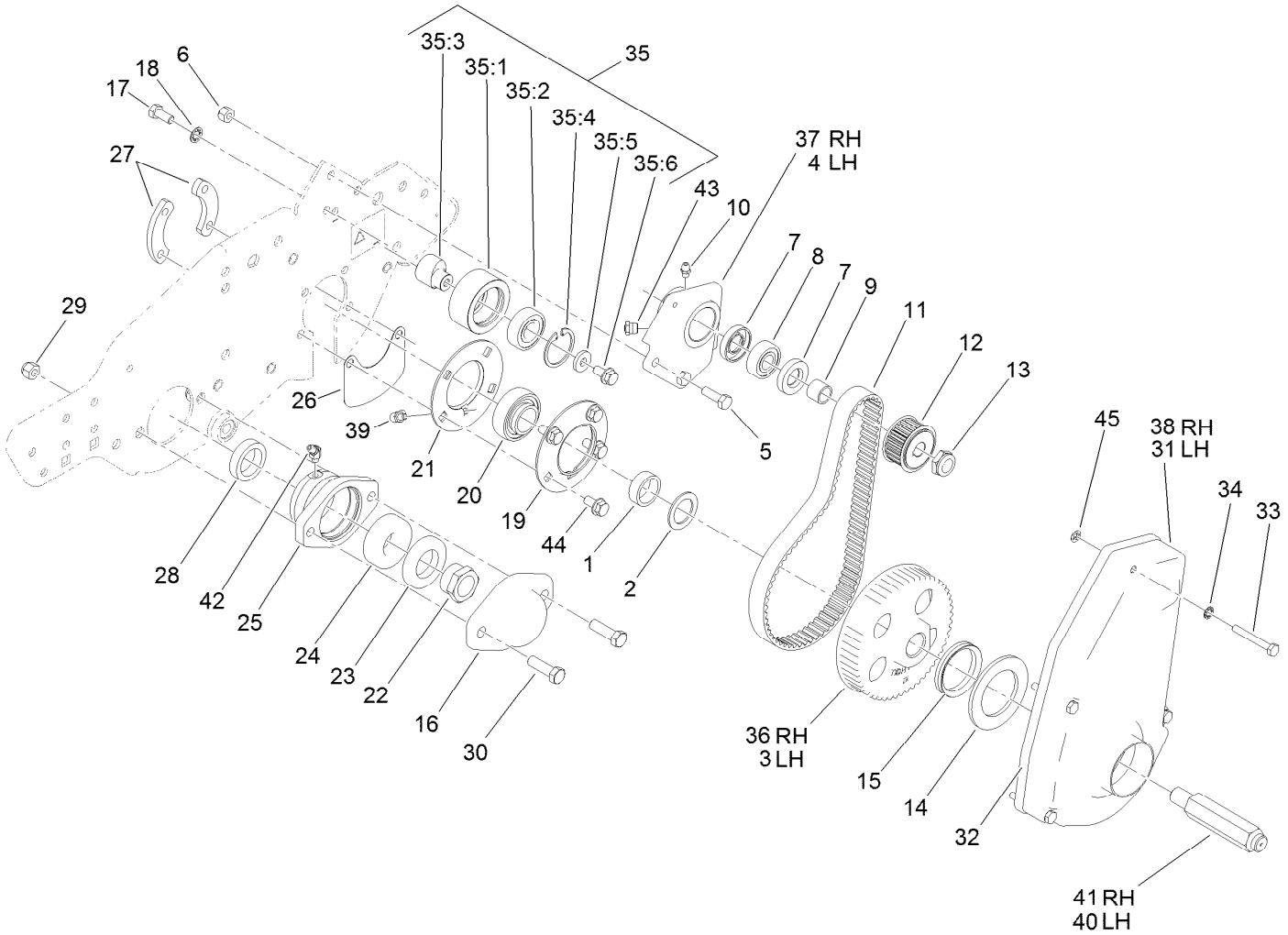


# Drum Drive Assembly (continued)

| Ref. | Part Number | Qty. | Description |
|---|---|---|---|
| 36 | 105-5364 | 1 | Pulley-Drum, RH |
| 37 | 108-9416 | 1 | Housing-Support, Differential (RH) |
| 38 | 88-7690-01 | 1 | Cover-Drum, Belt (RH) |
| 39 | 104-1843 | 2 | Fitting-Grease, 90 DEG |
| 40 | 88-7580 | 1 | Shaft-Wheel, Transport (LH) |
| 41 | 88-7590 | 1 | Shaft-Wheel, Transport (RH) |
| 42 | 302-11 | 1 | Fitting-Lube, 45 DEG |
| 43 | 302-34 | 2 | Fitting-Lube |
| 44 | 3234-14 | 8 | Screw-HHF |
| 45 | 106-8737 | 8 | Nut-Retainer |

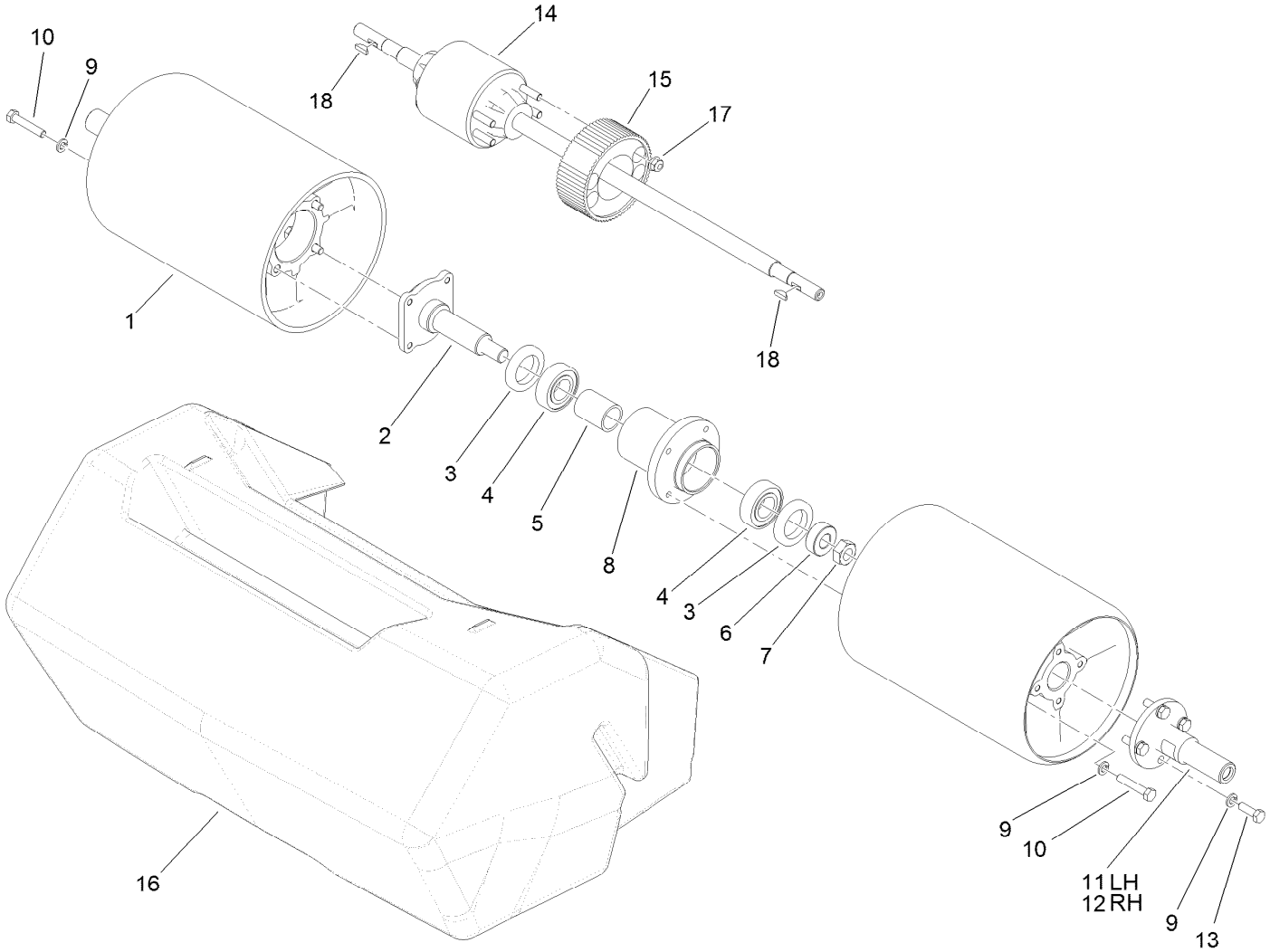


# Drum and Basket Assembly

| Ref. | Part Number | Qty. | Description |
|---|---|---|---|
| 1 | 117-1408 | 2 | Drum |
| 2 | 94-5850 | 1 | Spindle-Drum |
| 3 | 253-159 | 2 | Seal |
| 4 | 251-82 | 2 | Bearing-Ball |
| 5 | 65-6520 | 1 | Spacer |
| 6 | 65-6530 | 1 | Spacer |
| 7 | 3296-33 | 1 | Nut-Lock, NI |
| 8 | 132-6971 | 1 | Hub-Drum |
| 9 | 3253-4 | 16 | Washer-Lock |

| Ref. | Part Number | Qty. | Description |
|---|---|---|---|
| 10 | 322-9 | 8 | Screw-HH |
| 11 | 132-3841 | 1 | Shaft-Drum Extension, RH |
| 12 | 132-3842 | 1 | Shaft-Drum Extension, LH |
| 13 | 322-5 | 8 | Screw-HH |
| 14 | 93-6055 | 1 | Differential ASM |
| 15 | 65-9120 | 1 | Pulley-Housing, Differential |
| 16 | 130-0109 | 1 | Basket-Grass |
| 17 | 104-8300 | 4 | Nut-HF, NI |
| 18 | 3257-30 | 2 | Key-Woodruff |

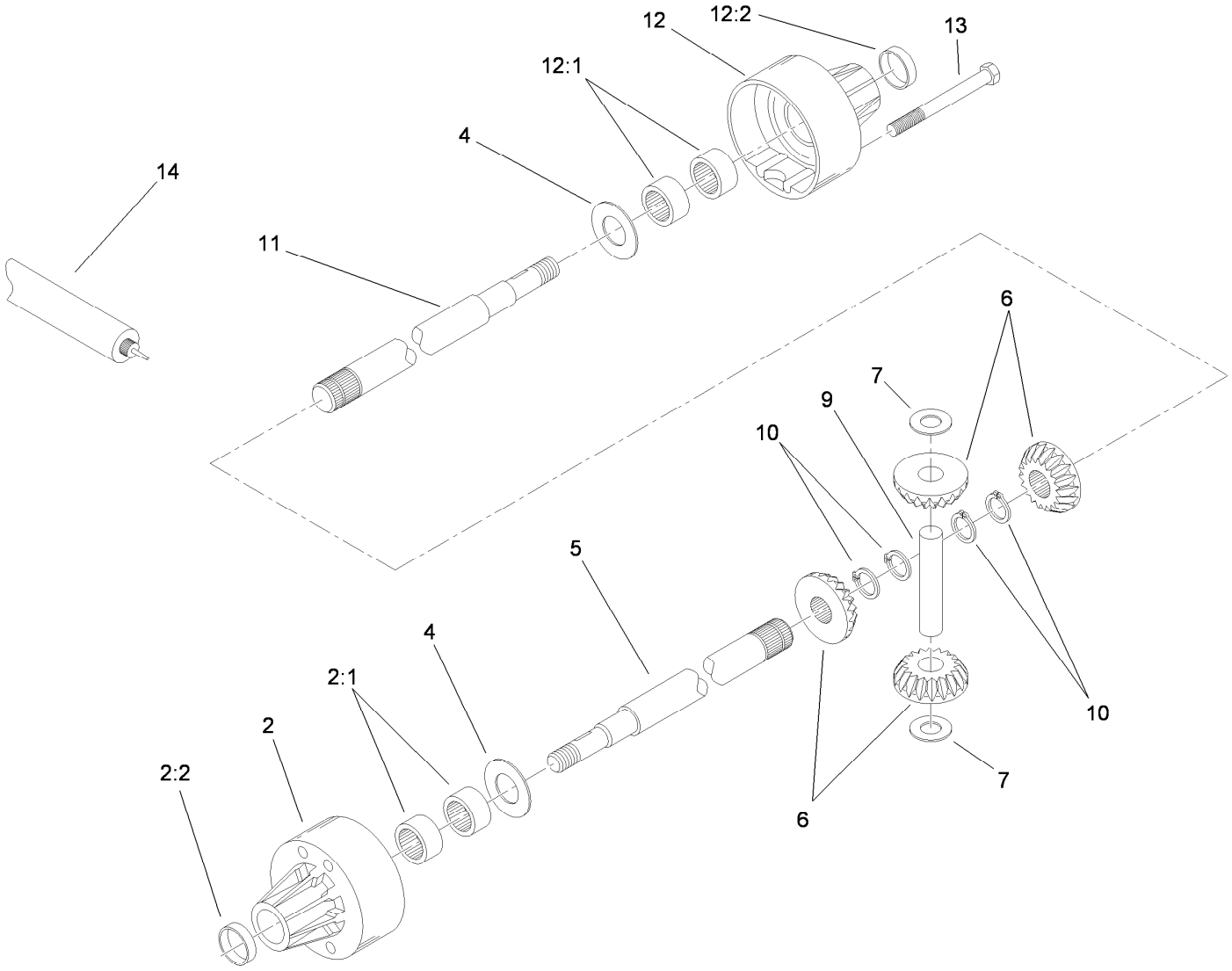


# Differential Assembly No. 93-6055

| *Ref.* | *Part Number* | *Qty.* | *Description* |
|---|---|---|---|
| 2 | 95-5741 | 1 | Carrier-Differential |
| 2:1 | 95-5738 | 4 | Bearing-Needle |
| 2:2 | 95-5737 | 2 | Seal-Oil |
| 4 | 95-5745 | 4 | Washer |
| 5 | 95-5736 | 1 | Axle (Long) |
| 6 | 104-0503 | 1 | Gear Set-Differential |
| 7 | 95-5744 | 2 | Washer-Flat |
| 9 | 95-5747 | 1 | Pin-Drive |
| 10 | 95-5746 | 4 | Ring-Retaining |
| 11 | 95-5735 | 1 | Axle (Short) |
| 12 | 95-5740 | 1 | Carrier-Differential |
| 12:1 | 95-5738 | 4 | Bearing-Needle |
| 12:2 | 95-5737 | 2 | Seal-Oil |
| 13 | 95-5739 | 4 | Screw |
| 14 | 95-5734 | 1 | Grease Petro Dist. |

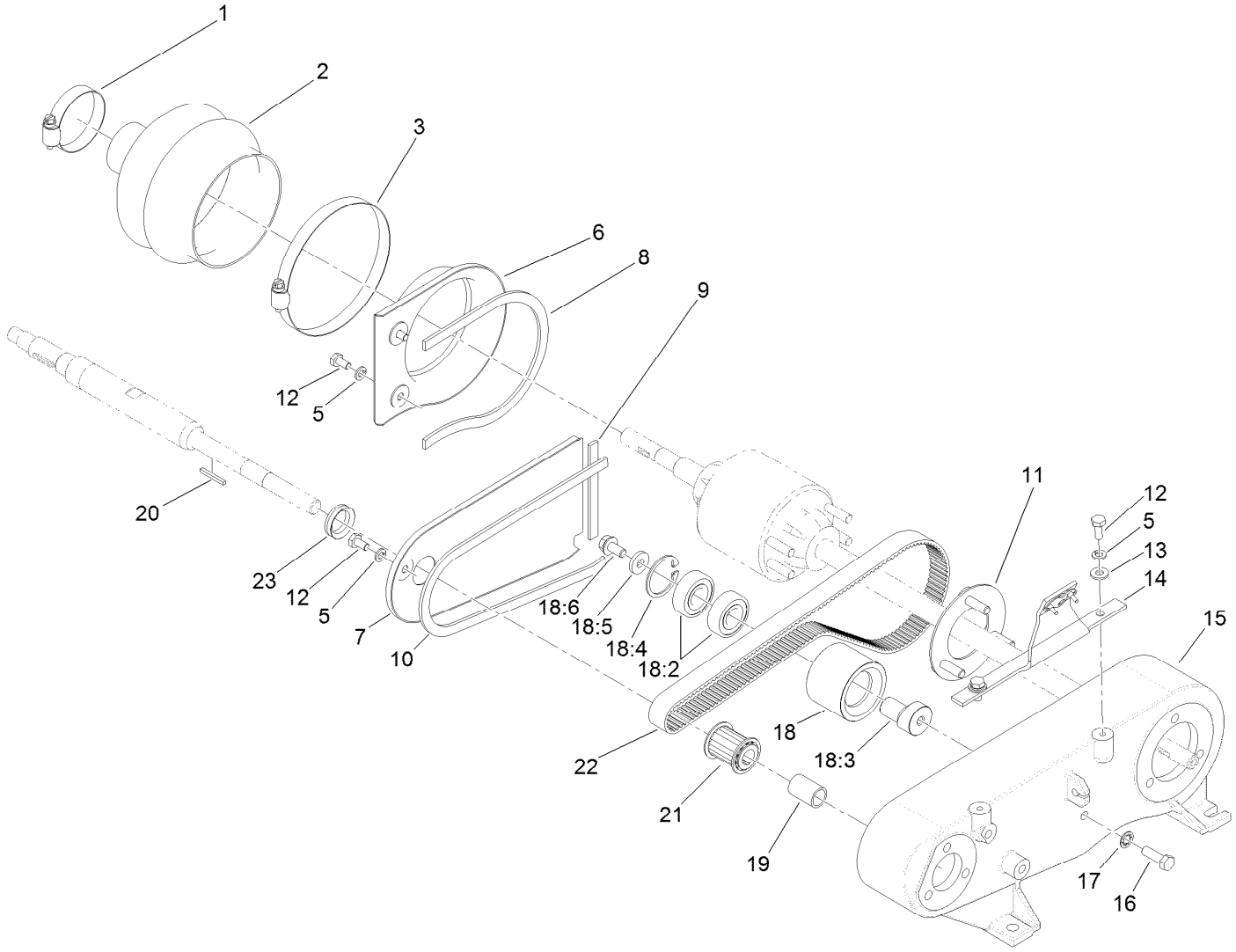


# Inner Countershaft Assembly

| Ref. | Part Number | Qty. | Description |
|---|---|---|---|
| 1 | 2412-139 | 1 | Clamp-Hose |
| 2 | 65-6800 | 1 | Boot-Differential |
| 3 | 2412-140 | 1 | Clamp-Hose |
| 5 | 3253-3 | 5 | Washer-Lock |
| 6 | 88-7250-03 | 1 | Cover-Box, Rear |
| 7 | 88-7240-03 | 1 | Cover-Box, Front |
| 8 | 65-6902 | 1 | Strip-Seal, Cover |
| 9 | 65-6903 | 1 | Strip-Seal, Cover |
| 10 | 65-6901 | 1 | Strip-Seal, Cover |
| 11 | 65-6720 | 1 | Plate-Screw |
| 12 | 321-3 | 5 | Screw-HH |
| 13 | 3256-22 | 2 | Washer-Flat |
| 14 | 93-1448 | 1 | Bracket-Cover |
| 15 | 88-7230 | 1 | Housing-Shaft, Counter |

| Ref. | Part Number | Qty. | Description |
|---|---|---|---|
| 16 | 322-4 | 1 | Screw-HH |
| 17 | 3254-2 | 1 | Washer-Lock, Internal |
| 18 | 88-7870 | 1 | Idler Pulley ASM |
| 18:2 | 38-7820 | 2 | Bearing-Ball |
| 18:3 | 88-7380 | 1 | Spacer-Pulley |
| 18:4 | 32120-42 | 1 | Ring-Retaining |
| 18:5 | 88-7200 | 1 | Washer-Flat |
| 18:6 | 3234-14 | 1 | Screw-HHF |
| 19 | 86-7140 | 1 | Spacer |
| 20 | 65-6850 | 1 | Key-Square |
| 21 | 65-8910 | 1 | Pulley-Countershaft |
| 22 | 65-9080 | 1 | Belt |
| 23 | 125-5201 | 1 | Seal-V-Ring |

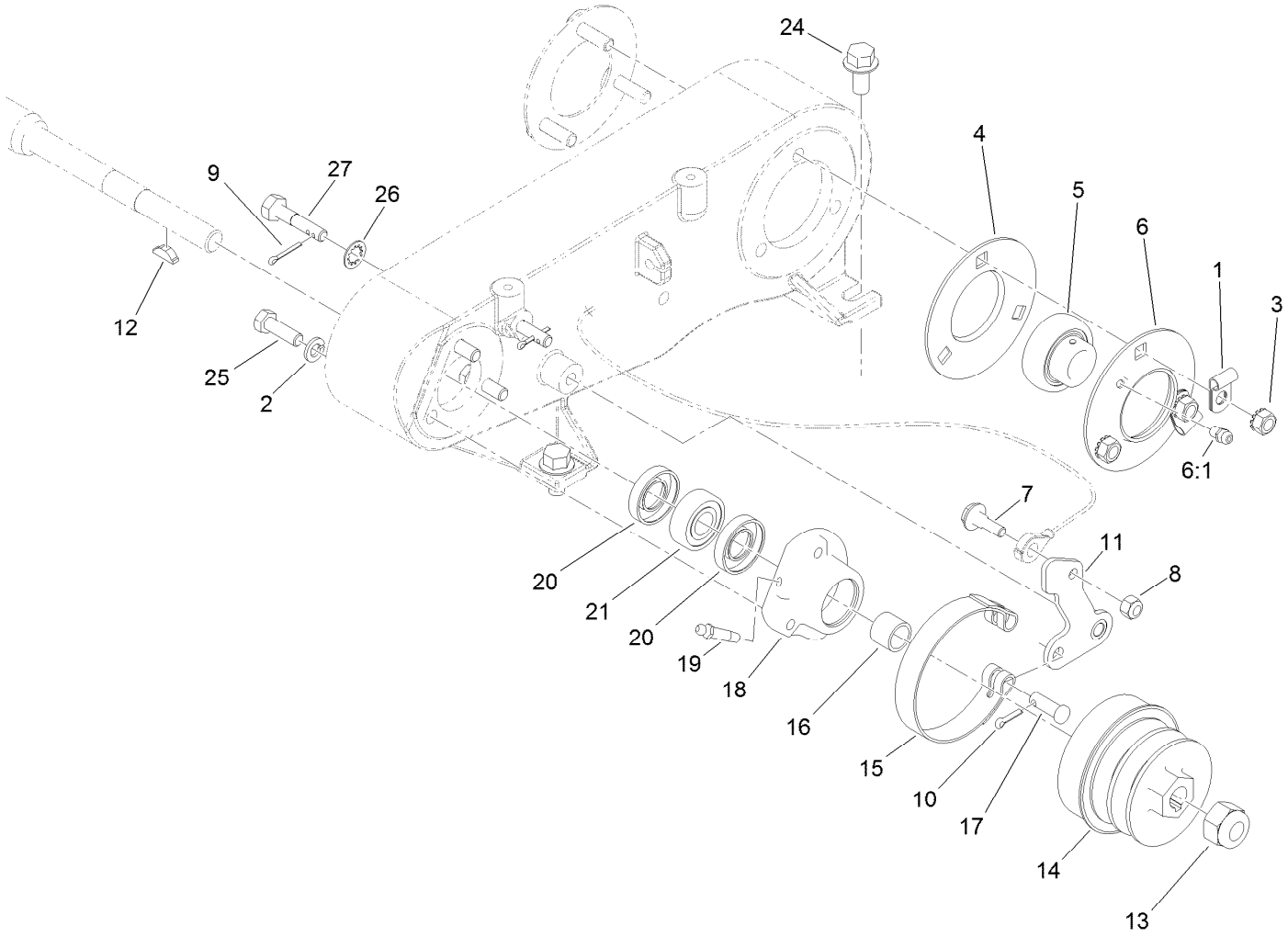


# Outer Crankshaft Assembly

| Ref. | Part Number | Qty. | Description |
|---|---|---|---|
| 1 | 88-7970 | 2 | Clip |
| 2 | 3253-4 | 3 | Washer-Lock |
| 3 | 32149-1 | 3 | Nut-Keps |
| 4 | 65-6710 | 1 | Flangette-Bearing |
| 5 | 108-7663 | 1 | Bearing-Race, Extended |
| 6 | 65-6700 | 1 | Flangette-Lube |
| 6:1 | 302-55 | 1 | Fitting-Grease |
| 7 | 11-9030 | 1 | Screw-Shoulder |
| 8 | 3296-42 | 1 | Nut-Lock, NI |
| 9 | 3272-6 | 2 | Pin-Cotter |
| 10 | 3272-8 | 1 | Pin-Cotter |
| 11 | 117-1433 | 1 | Lever-Brake, Lower |
| 12 | 3257-30 | 1 | Key-Woodruff |

| Ref. | Part Number | Qty. | Description |
|---|---|---|---|
| 13 | 3296-63 | 1 | Nut-Lock, NI |
| 14 | 92-9212 | 1 | Pulley-Shaft, Input |
| 15 | 65-8700 | 1 | Band-Brake |
| 16 | 86-7130 | 1 | Spacer-Pulley |
| 17 | 283-75 | 1 | Pin-Clevis |
| 18 | 120-3163 | 1 | Housing-Bearing |
| 19 | 302-64 | 1 | Fitting-Grease |
| 20 | 253-160 | 2 | Seal-Grease |
| 21 | 251-338 | 1 | Bearing-Ball |
| 24 | 3234-1 | 4 | Screw-HHF |
| 25 | 322-5 | 3 | Screw-HH |
| 26 | 3254-6 | 2 | Washer-Lock, Internal |
| 27 | 117-1430 | 2 | Bolt-Mount, Brake |

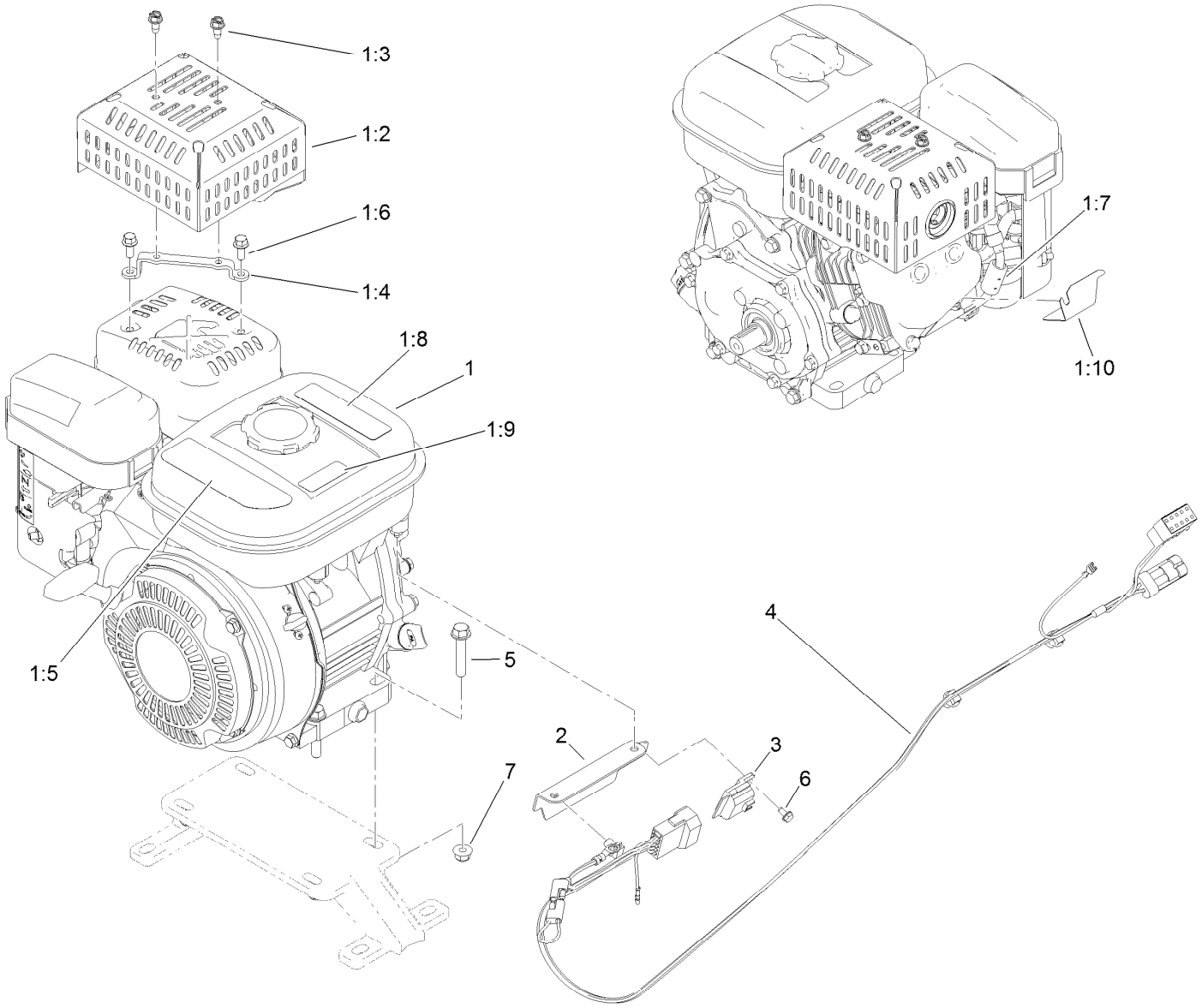


# Engine Assembly

| Ref. | Part Number | Qty. | Description |
|---|---|---|---|
| 1 | 130-6466 | 1 | Engine ASM |
| 1:2 | 120-9240-03 | 1 | Guard-Muffler |
| 1:3 | 120-9551 | 2 | Screw-HWH |
| 1:4 | 115-7352 | 1 | Bracket-Guard, Muffler |
| 1:5 | 120-2769 | 1 | Decal-Warning |
| 1:6 | 104-2628 | 2 | Screw-HWH |
| 1:7 | 112-1540 | 1 | Ferrite-Snap On |
| 1:8 | 117-2718 | 1 | Decal-Arrester, Spark |

| Ref. | Part Number | Qty. | Description |
|---|---|---|---|
| 1:9 | 130-8322 | 1 | Decal-Warning, Ethanol |
| 1:10 | 133-2355 | 1 | Shield |
| 2 | 120-2705-03 | 1 | Plate-Harness, Wire |
| 3 | 1-323430 | 1 | Module-Interlock |
| 4 | 120-6338 | 1 | Harness-Wire |
| 5 | 94-5780 | 4 | Screw-HWH |
| 6 | 104-2065 | 1 | Screw-HWH |
| 7 | 104-8300 | 4 | Nut-HF, NI |

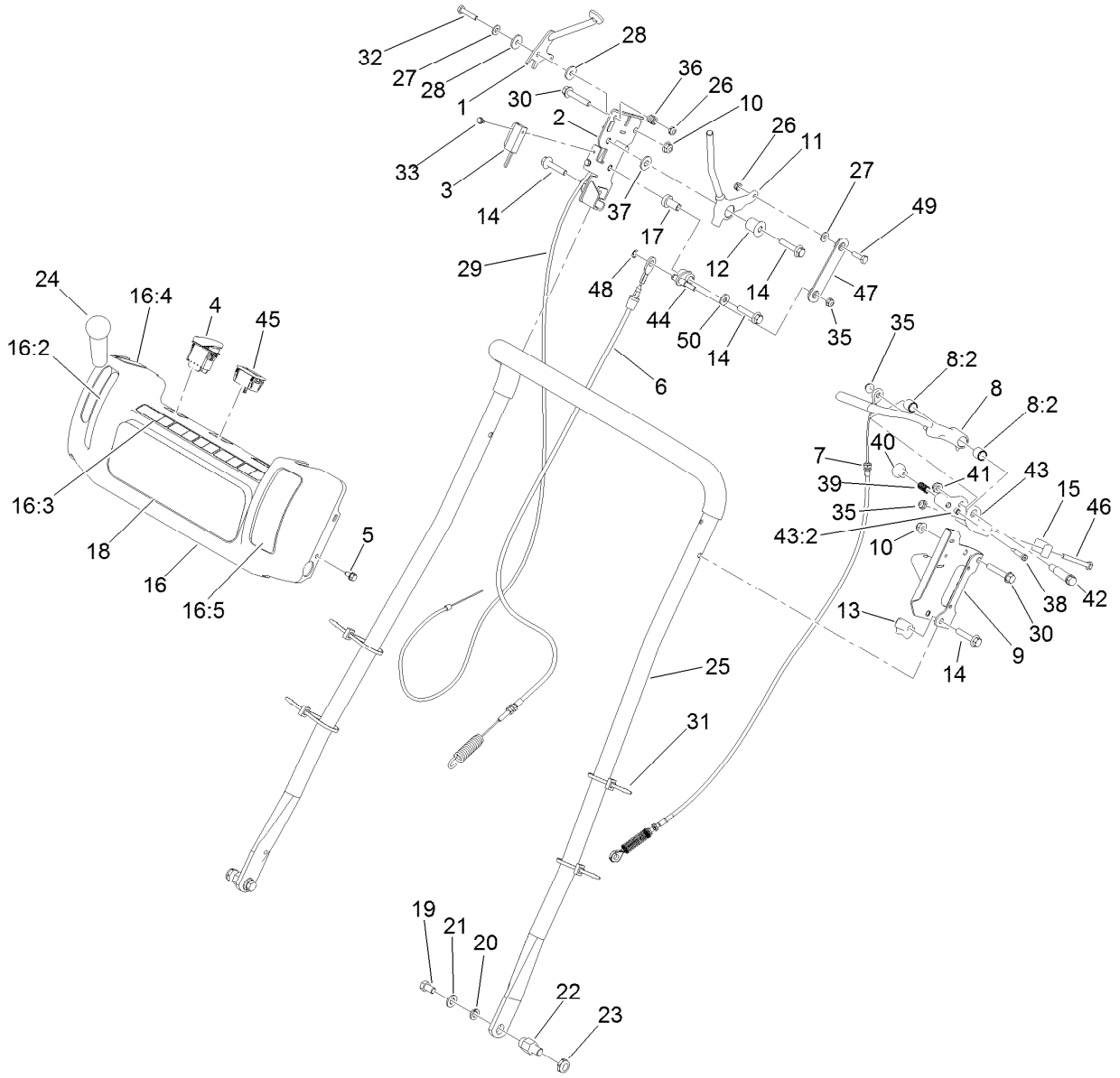


# Handle Assembly

| Ref. | Part Number | Qty. | Description |
|---|---|---|---|
| 1 | 120-2697 | 1 | Lever-Throttle |
| 2 | 125-5188-03 | 1 | Bracket-Traction |
| 3 | 100-1270 | 1 | Switch-Proximity |
| 4 | 112-9420 | 1 | Switch-Engine |
| 5 | 104-2628 | 4 | Screw-HWH |
| 6 | 130-0107 | 1 | Control Clutch Cable ASM |
| 7 | 115-1714 | 1 | Cable-Brake, Squeeze |
| 8 | 125-5207 | 1 | Squeeze Brake Lever ASM |
| 8:2 | 27-6250 | 2 | Bushing |
| 9 | 127-2233-03 | 1 | Bracket-Brake |
| 10 | 104-8300 | 2 | Nut-HF, NI |
| 11 | 125-5248 | 1 | Lever-Traction |
| 12 | 112-9317 | 1 | Bushing-Flanged |
| 13 | 110-2415 | 2 | Clamp-Handle |
| 14 | 112-9318 | 4 | Screw-HHF, Locking |
| 15 | 115-1703 | 1 | Mount-Rear |
| 16 | 125-5199 | 1 | Console ASM |
| 16:2 | 115-1720 | 1 | Decal-Lever, Traction |
| 16:3 | 120-2761 | 1 | Decal-Warning |
| 16:4 | 93-6085 | 1 | Decal-Throttle |
| 16:5 | 120-2727 | 1 | Decal-Brake |

| Ref. | Part Number | Qty. | Description |
|---|---|---|---|
| 17 | 65-5080 | 1 | Bushing-Flange |
| 18 | 115-1130 | 1 | Decal-Console |
| 19 | 323-34 | 2 | Screw-HH |
| 20 | 3253-21 | 2 | Washer-Lock |
| 21 | 3256-24 | 2 | Washer-Flat |
| 22 | 110-7364 | 2 | Pin-Handle, Pivot |
| 23 | 3296-28 | 2 | Nut-Lock, NI |
| 24 | 104-9760 | 1 | Knob-Black |
| 25 | 120-2713 | 1 | Handle |
| 26 | 3296-56 | 2 | Nut-Lock, NI |
| 27 | 3256-22 | 2 | Washer-Flat |
| 28 | 66-2921 | 2 | Washer-Friction |
| 29 | 120-2709 | 1 | Cable-Throttle |
| 30 | 94-5780 | 2 | Screw-HWH |
| 31 | 3290-378 | 4 | Tie-Cable |
| 32 | 321-8 | 1 | Screw-HH |
| 33 | 104-2065 | 2 | Screw-HWH |
| 35 | 104-7201 | 3 | Nut-HF |
| 36 | 3-5787 | 1 | Spring-Compression |
| 37 | 3256-3 | 1 | Washer-Flat |
| 38 | 115-1699 | 1 | Screw-Shoulder |

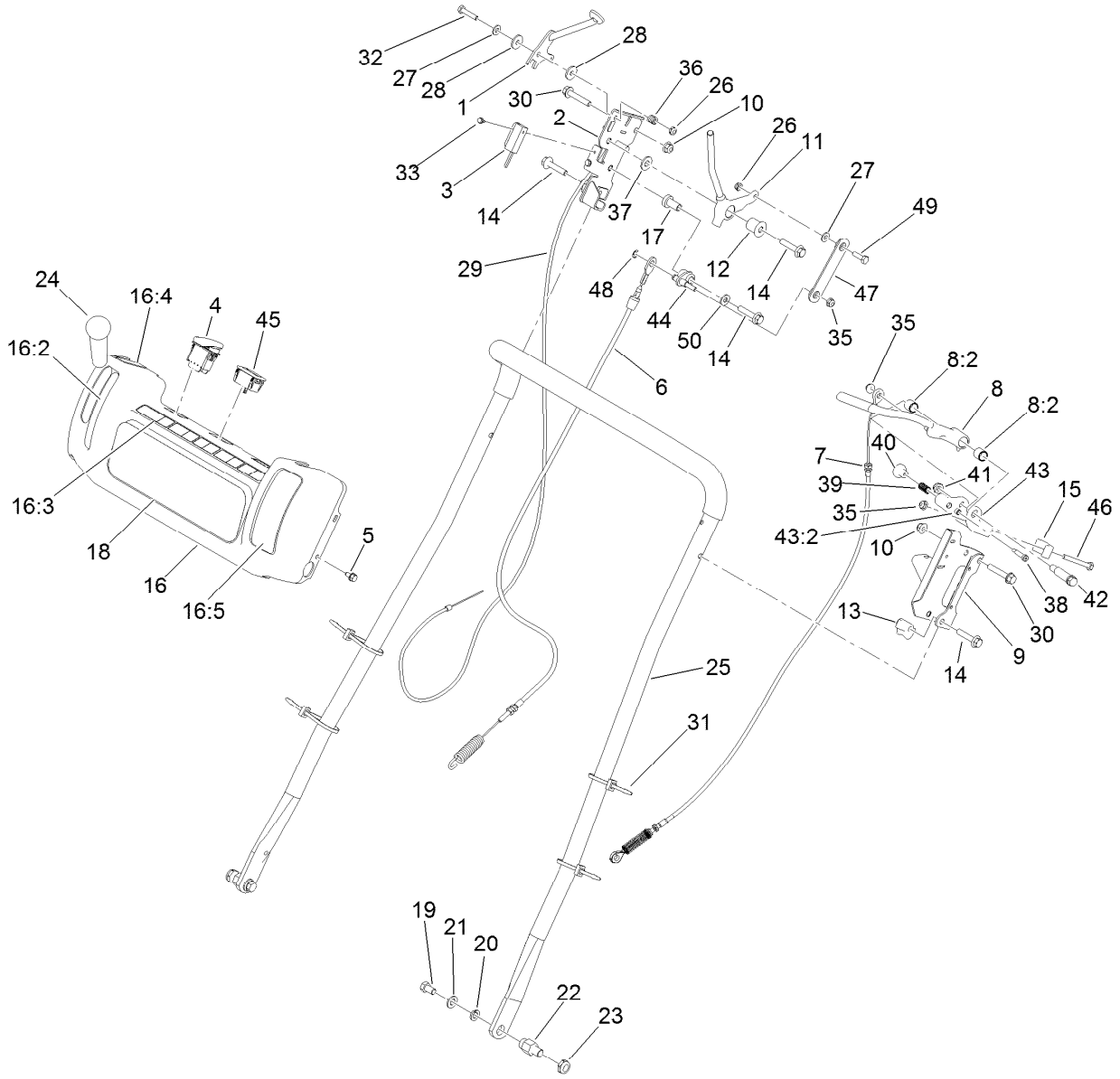


# Handle Assembly (continued)

| Ref. | Part Number | Qty. | Description |
|---|---|---|---|
| 39 | 107-8885 | 1 | Spring-Compression |
| 40 | 115-1688 | 1 | Arm-Lock, Brake |
| 41 | 3296-59 | 1 | Nut-Lock, NI |
| 42 | 115-1116 | 1 | Screw-Shoulder |
| 43 | 115-1704 | 1 | Front Mount ASM |
| 43:2 | 256-112 | 1 | Bushing |
| 44 | 127-6142 | 1 | Pivot-Traction |

| Ref. | Part Number | Qty. | Description |
|---|---|---|---|
| 45 | 119-1347 | 1 | Meter-Hour |
| 46 | 321-11 | 1 | Screw-HH |
| 47 | 132-9579 | 1 | Linkage-Traction |
| 48 | 701197 | 1 | E-Ring |
| 49 | 321-5 | 1 | Screw-HH |
| 50 | 120-9646 | 1 | Washer-Flat |

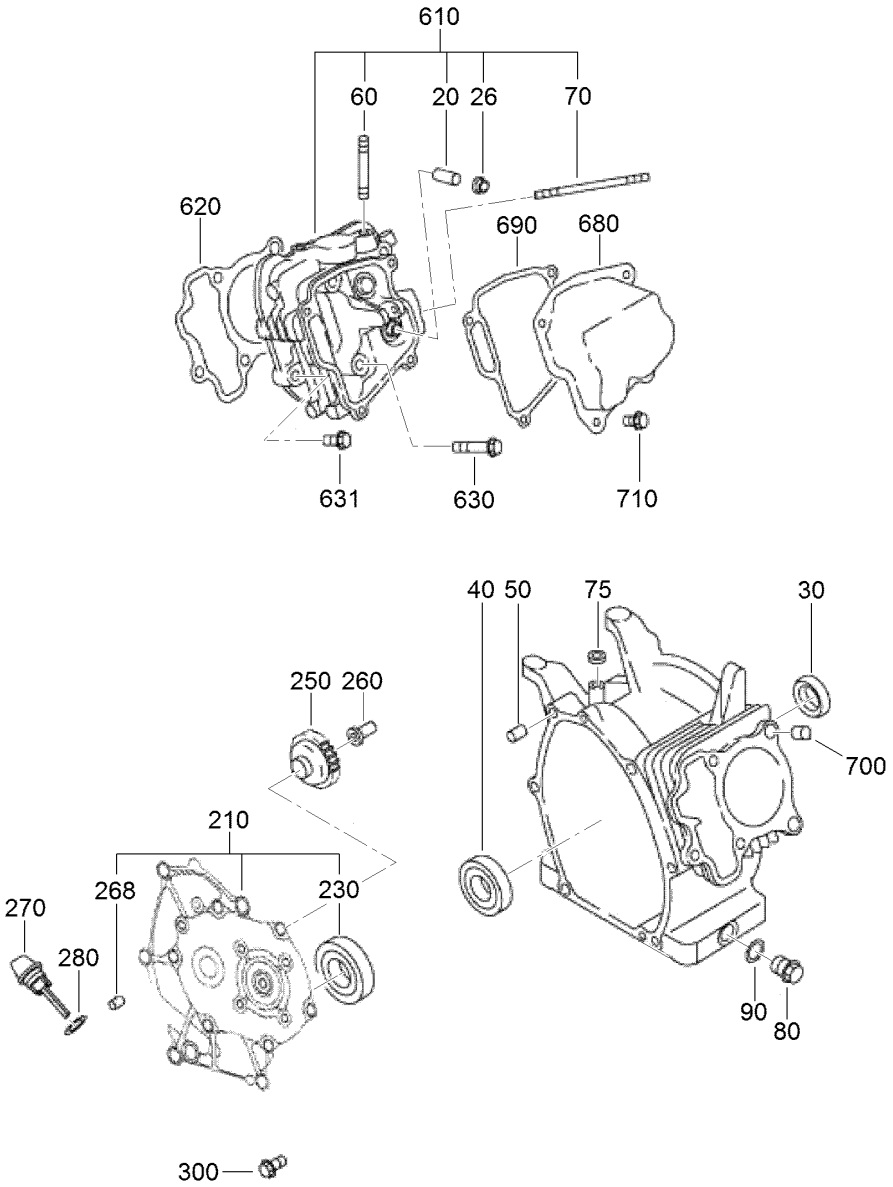


# Crankcase Assembly

| Ref. | Part Number | Qty. | Description |
|---|---|---|---|
| 20 | 121-0571 | 2 | Guide-Valve |
| 26 | 121-0611 | 1 | Seal-Stem |
| 30 | 121-0540 | 1 | Seal-Oil |
| 40 | 121-0546 | 1 | Bearing-Ball |
| 50 | 121-0608 | 2 | Pipe-Knock |
| 60 | 121-0512 | 2 | Stud |
| 70 | 121-0511 | 2 | Stud |
| 75 | 121-0539 | 1 | Seal-Oil |
| 80 | 121-0538 | 1 | Plug |
| 90 | 121-0532 | 1 | Gasket |
| 210 | 121-0607 | 1 | Main Bearing Cover ASM |
| 230 | 121-0544 | 1 | Bearing-Ball |
| 250 | 121-0652 | 1 | Governor Gear ASM |
| 260 | 121-0641 | 1 | Sleeve-Governor |
| 268 | 121-6351 | 2 | Pin-Straight |

| Ref. | Part Number | Qty. | Description |
|---|---|---|---|
| 270 | 121-0665 | 1 | Gauge-Oil |
| 280 | 121-6374 | 1 | Gasket |
| 300 | 121-0502 | 6 | Bolt-Flange |
| 610 | 121-0672 | 1 | Cylinder Head ASM (Serial No. 1Xxxxxxx) |
| 610 | 125-9159 | 1 | Cylinder Head ASM (Serial No. 2Xxxxxxx) |
| 620 | 121-0585 | 1 | Gasket-Head |
| 630 | 121-0519 | 4 | Bolt-Flange |
| 631 | 121-0520 | 1 | Bolt-Flange |
| 680 | 121-0609 | 1 | Rocker Cover ASM |
| 690 | 121-0610 | 1 | Gasket-Cover, Rocker |
| 700 | 121-0608 | 2 | Pipe-Knock |
| 710 | 121-0514 | 4 | Bolt-Flange |
| 960 | 121-0606 | 1 | Gasket Set ● |

● Not illustrated

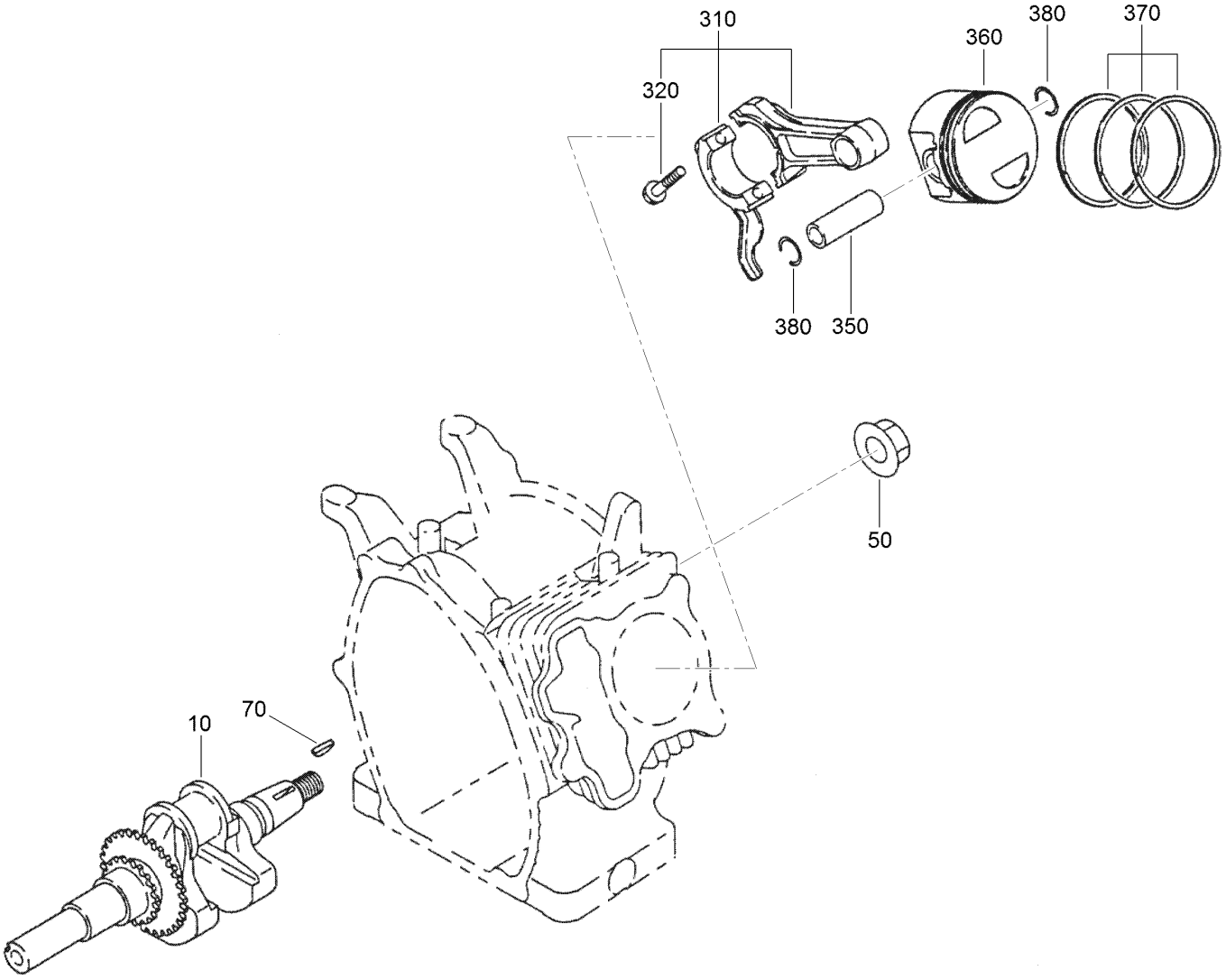


# Crankshaft and Piston Assembly

| Ref. | Part Number | Qty. | Description |
|---|---|---|---|
| 10 | 121-0586 | 1 | Crankshaft ASM |
| 50 | 121-0529 | 1 | Nut-Flange |
| 70 | 121-0537 | 1 | Key-Woodruff |
| 310 | 121-0587 | 1 | Connecting Rod ASM |
| 310 | 121-0588 | 1 | Connecting Rod ASM (Undersize) |
| 320 | 121-0612 | 2 | Bolt-Rod, Connecting |
| 350 | 121-0589 | 1 | Pin-Piston |
| 360 | 121-6353 | 1 | Piston (Oversize 0.50 Mm) |
| 360 | 121-0590 | 1 | Piston (STD) |
| 360 | 121-0591 | 1 | Piston (Oversize 0.250 Mm) |
| 370 | 121-0592 | 1 | Piston Ring Set (STD) |
| 370 | 121-0593 | 1 | Piston Ring Set (Oversize 0.250 Mm) |
| 370 | 121-0594 | 1 | Piston Ring Set (Oversize 0.50 Mm) |
| 380 | 121-0561 | 2 | Clip |

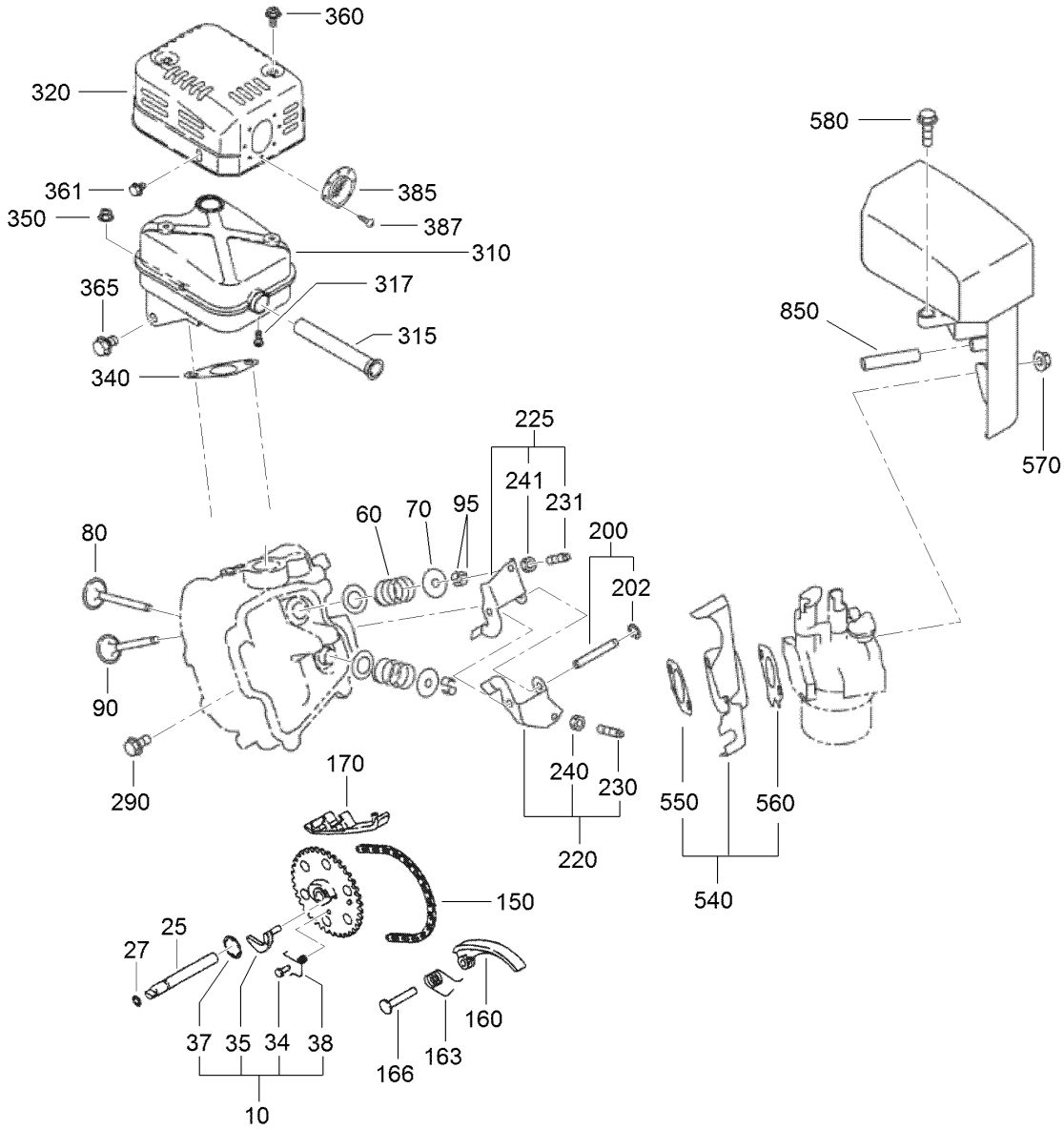


# Intake and Exhaust Assembly

| Ref. | Part Number | Qty. | Description |
|---|---|---|---|
| 10 | 121-0613 | 1 | Camshaft ASM |
| 25 | 121-0625 | 1 | Pin-Camshaft |
| 27 | 121-0535 | 1 | O-Ring |
| 34 | 121-0639 | 1 | Pin-Spring |
| 35 | 121-0631 | 1 | Lever-Release |
| 37 | 121-0632 | 1 | Clip |
| 38 | 121-0640 | 1 | Spring-Return |
| 60 | 121-0673 | 2 | Spring-Valve |
| 70 | 121-0579 | 2 | Retainer-Spring |
| 80 | 121-0596 | 1 | Valve-Intake |
| 90 | 121-0597 | 1 | Valve-Exhaust |
| 95 | 121-0555 | 4 | Collet-Valve |
| 150 | 121-0599 | 1 | Timing Chain ASM |
| 160 | 121-0634 | 1 | Tensioner |
| 163 | 121-0637 | 1 | Spring-Tensioner |
| 166 | 121-0633 | 1 | Pin-Tensioner |
| 170 | 121-0635 | 1 | Guide-Chain |
| 200 | 121-0624 | 1 | Rocker Pin ASM |
| 202 | 121-0507 | 1 | Clip |
| 220 | 121-0629 | 1 | Intake Rocker Arm ASM |
| 225 | 121-0630 | 1 | Exhaust Rocker Arm ASM |

| Ref. | Part Number | Qty. | Description |
|---|---|---|---|
| 230 | 121-0524 | 1 | Screw-Adjust |
| 231 | 121-0524 | 1 | Screw-Adjust |
| 240 | 121-0528 | 1 | Nut |
| 241 | 121-0528 | 1 | Nut |
| 290 | 121-0514 | 1 | Bolt-Flange |
| 310 | 121-0595 | 1 | Muffler ASM |
| 315 | 121-0638 | 1 | Arrestor-Spark |
| 317 | 121-0525 | 1 | Screw-Tapping |
| 320 | 121-0598 | 1 | Muffler Cover ASM |
| 340 | 121-0626 | 1 | Gasket-Muffler |
| 350 | 121-6376 | 2 | Nut-Flange |
| 360 | 121-0527 | 2 | Bolt-Flange |
| 361 | 121-0513 | 1 | Bolt-Flange |
| 365 | 121-0521 | 1 | Bolt-Flange |
| 385 | 121-6354 | 1 | Screen-Complete |
| 387 | 121-0525 | 2 | Screw-Tapping |
| 540 | 121-0623 | 1 | Insulator ASM |
| 550 | 121-0628 | 1 | Gasket-Insulator No.2 |
| 560 | 121-0627 | 1 | Gasket-Insulator No.1 |
| 570 | 121-0506 | 2 | Nut-Flange |

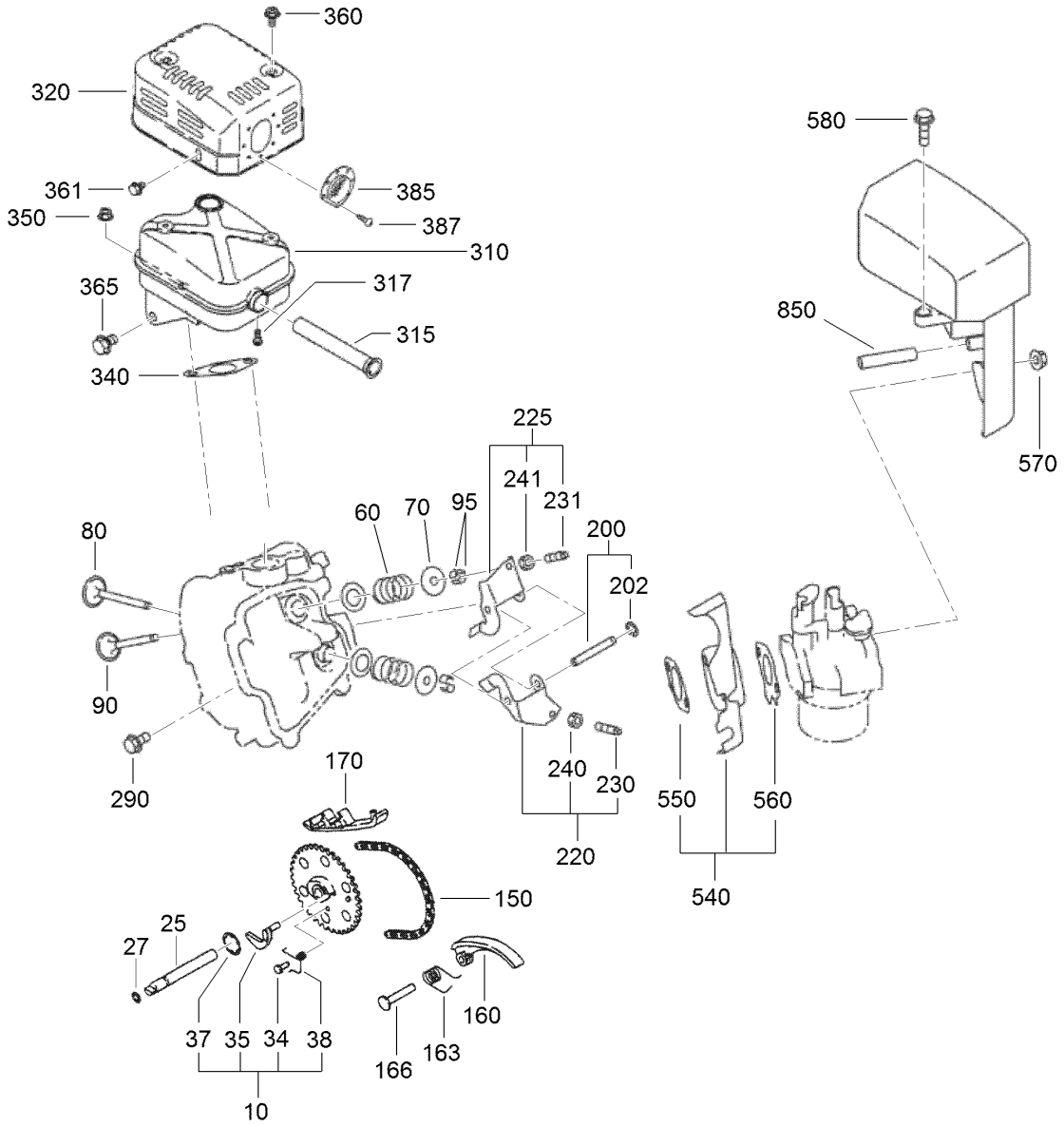


# Intake and Exhaust Assembly (continued)

| *Ref.* | *Part Number* | *Qty.* | *Description* |
|---|---|---|---|
| 580 | 121-0516 | 1 | Bolt-Flange |
| 850 | 121-6375 | 1 | Pipe-Breather |

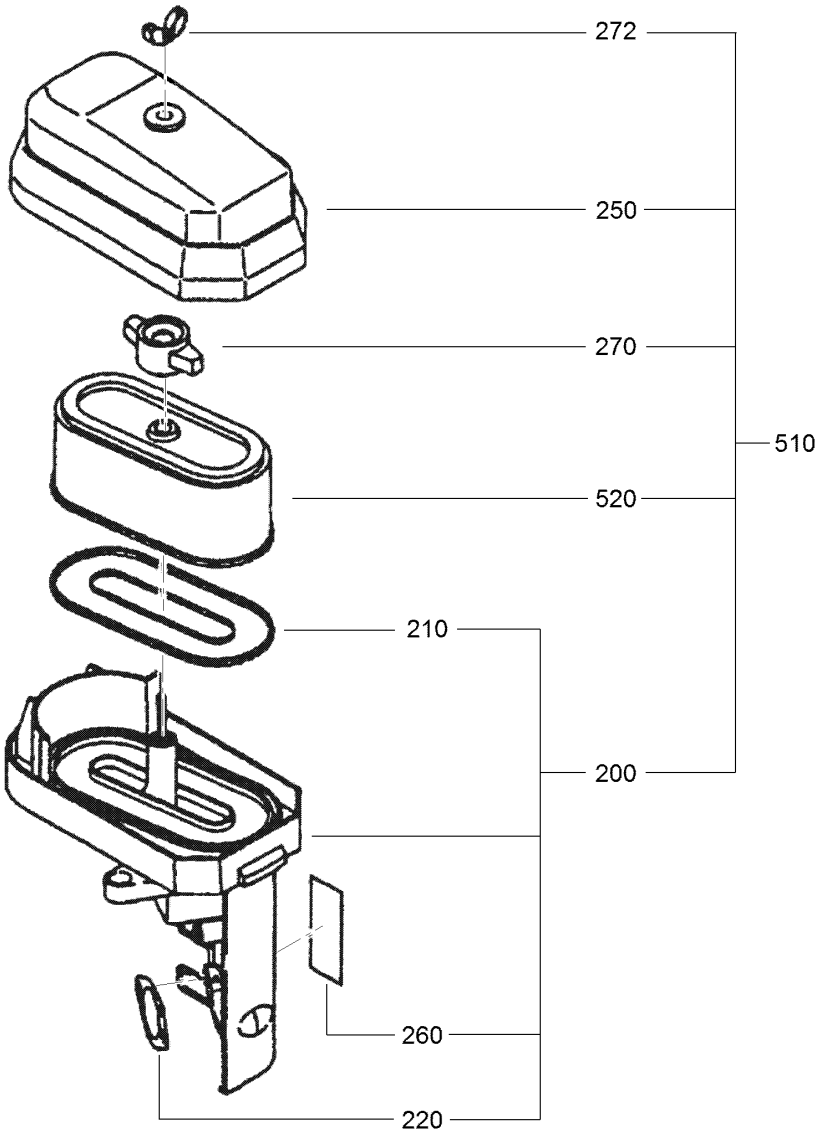


# Air Cleaner Assembly

| *Ref.* | *Part Number* | *Qty.* | *Description* |
|---|---|---|---|
| 200 | 121-0620 | 1 | Base ASM |
| 210 | 121-0617 | 1 | Packing |
| 220 | 121-0614 | 1 | Packing |
| 250 | 121-0621 | 1 | Cover ASM |
| 260 | 121-0616 | 1 | Label |
| 270 | 121-0622 | 1 | Nut-Wing |
| 272 | 121-0615 | 1 | Nut-Wing |
| 510 | 121-0619 | 1 | Air Cleaner ASM |
| 520 | 121-0618 | 1 | Set-Element |

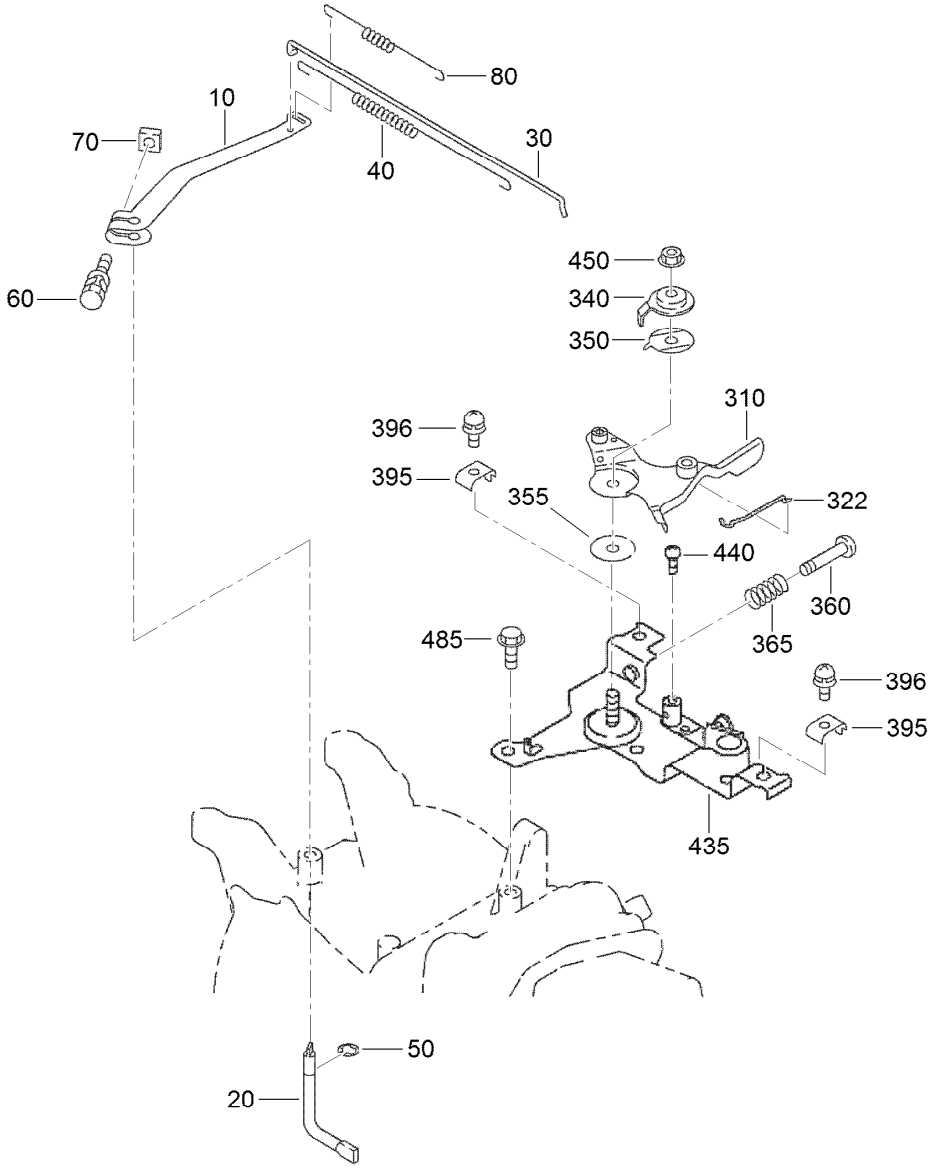


# Governor Assembly

| Ref. | Part Number | Qty. | Description |
|---|---|---|---|
| 10 | 121-0643 | 1 | Lever-Governor |
| 20 | 121-0642 | 1 | Shaft-Governor |
| 30 | 121-0674 | 1 | Governor Rod ASM |
| 40 | 121-0645 | 1 | Spring-Rod |
| 50 | 121-0507 | 1 | Clip |
| 60 | 121-0522 | 1 | Bolt And Washer ASM |
| 70 | 121-0530 | 1 | Nut |
| 80 | 121-0644 | 1 | Spring-Governor |
| 310 | 121-0646 | 1 | Speed Control Lever ASM |
| 322 | 121-0648 | 1 | Link Rod ASM |
| 340 | 121-0647 | 1 | Plate-Stop |

| Ref. | Part Number | Qty. | Description |
|---|---|---|---|
| 350 | 121-0651 | 1 | Washer |
| 355 | 121-0534 | 1 | Washer-Friction |
| 360 | 121-0509 | 1 | Screw |
| 365 | 121-0572 | 1 | Spring-Adjust |
| 395 | 121-0650 | 2 | Clamp |
| 396 | 121-0523 | 2 | Screw And Washer ASM |
| 435 | 121-0654 | 1 | Speed Control Bracket ASM |
| 440 | 121-0508 | 1 | Screw |
| 450 | 121-0505 | 1 | Nut-Self Lock |
| 485 | 121-0514 | 2 | Bolt-Flange |

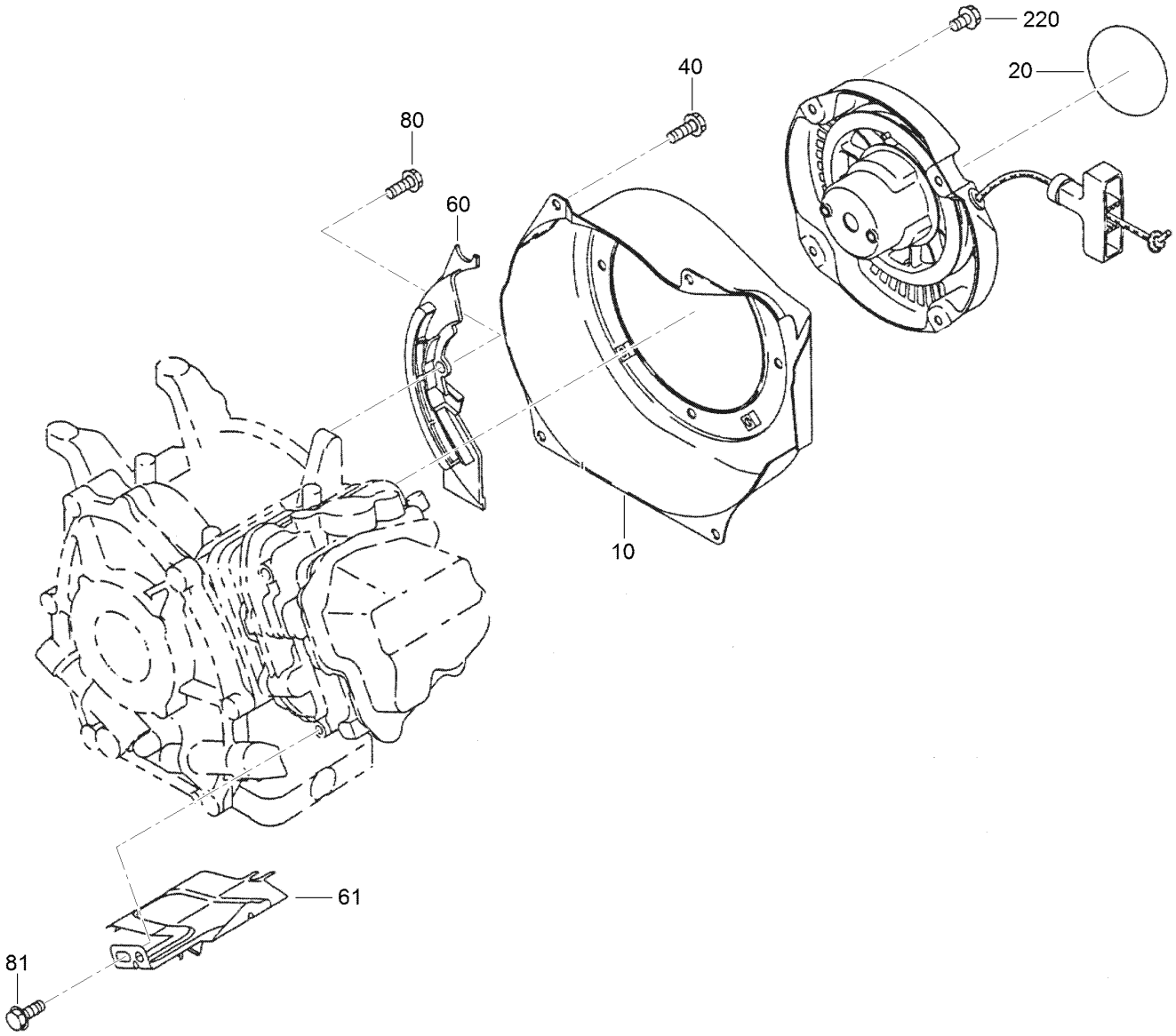


# Recoil and Shroud Assembly

| *Ref.* | *Part Number* | *Qty.* | *Description* |
|---|---|---|---|
| 10 | 121-0600 | 1 | Blower Housing ASM |
| 20 | 121-0550 | 1 | Label-Trademark |
| 40 | 121-0515 | 4 | Bolt-Flange |
| 60 | 121-0656 | 1 | Case Baffle No.1 ASM |
| 61 | 121-0655 | 1 | Case Baffle No.2 ASM |
| 80 | 121-0500 | 1 | Bolt-Flange |
| 81 | 121-0514 | 1 | Bolt-Flange |
| 220 | 121-6377 | 4 | Bolt And Washer ASM |

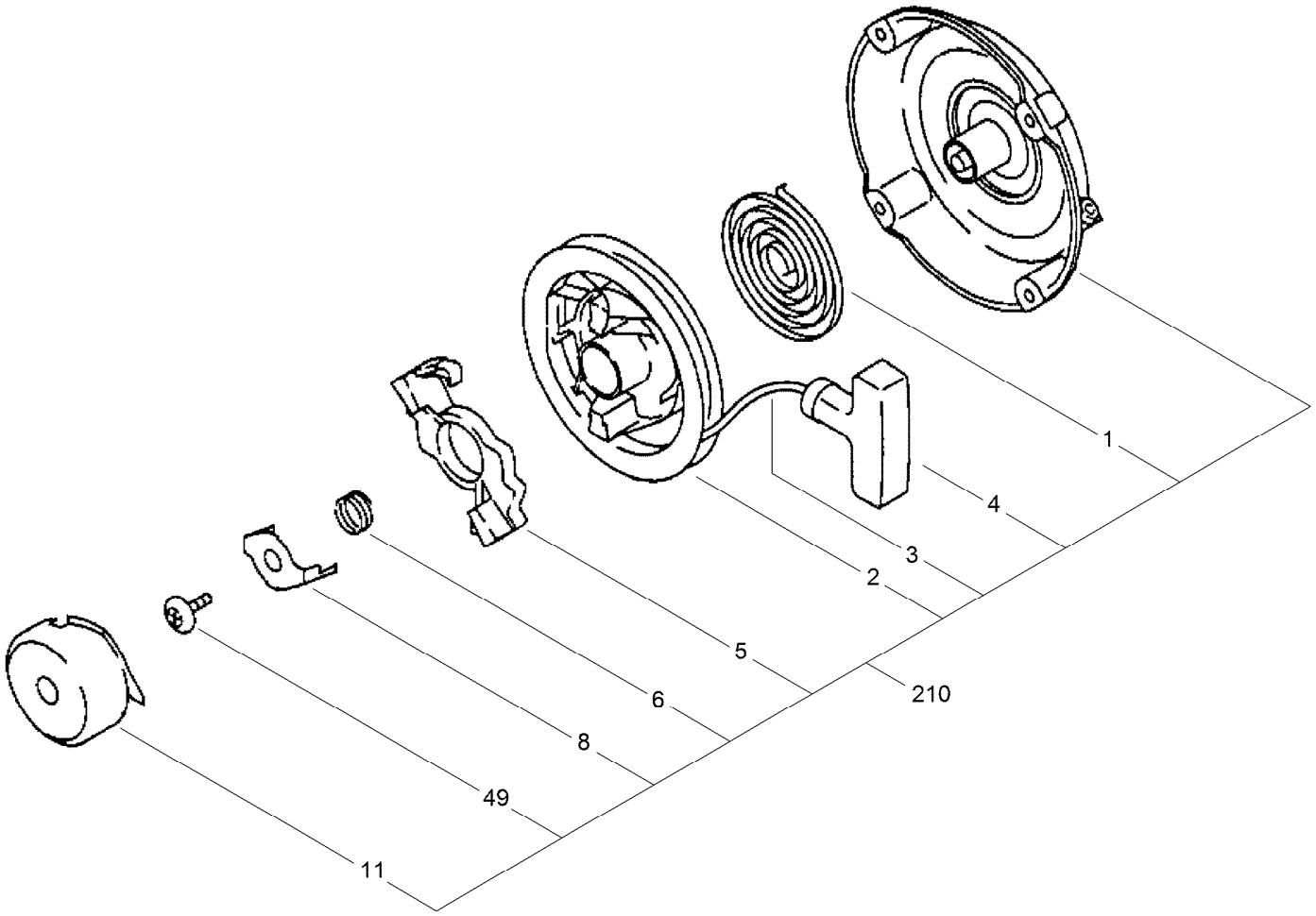


# Recoil Assembly

| *Ref.* | *Part Number* | *Qty.* | *Description* |
|---|---|---|---|
| 1 | 121-6356 | 1 | Spring-Spiral |
| 2 | 121-6357 | 1 | Reel |
| 3 | 121-0676 | 1 | Starter Rope |
| 4 | 121-6358 | 1 | Handle-Starter |
| 5 | 121-6359 | 1 | Ratchet |
| 6 | 121-6360 | 1 | Spring-Friction |
| 8 | 121-6361 | 1 | Plate-Friction |
| 11 | 121-6362 | 1 | Pulley-Starter |
| 49 | 121-6363 | 1 | Screw-Center |
| 210 | 121-6355 | 1 | Recoil Starter ASM |

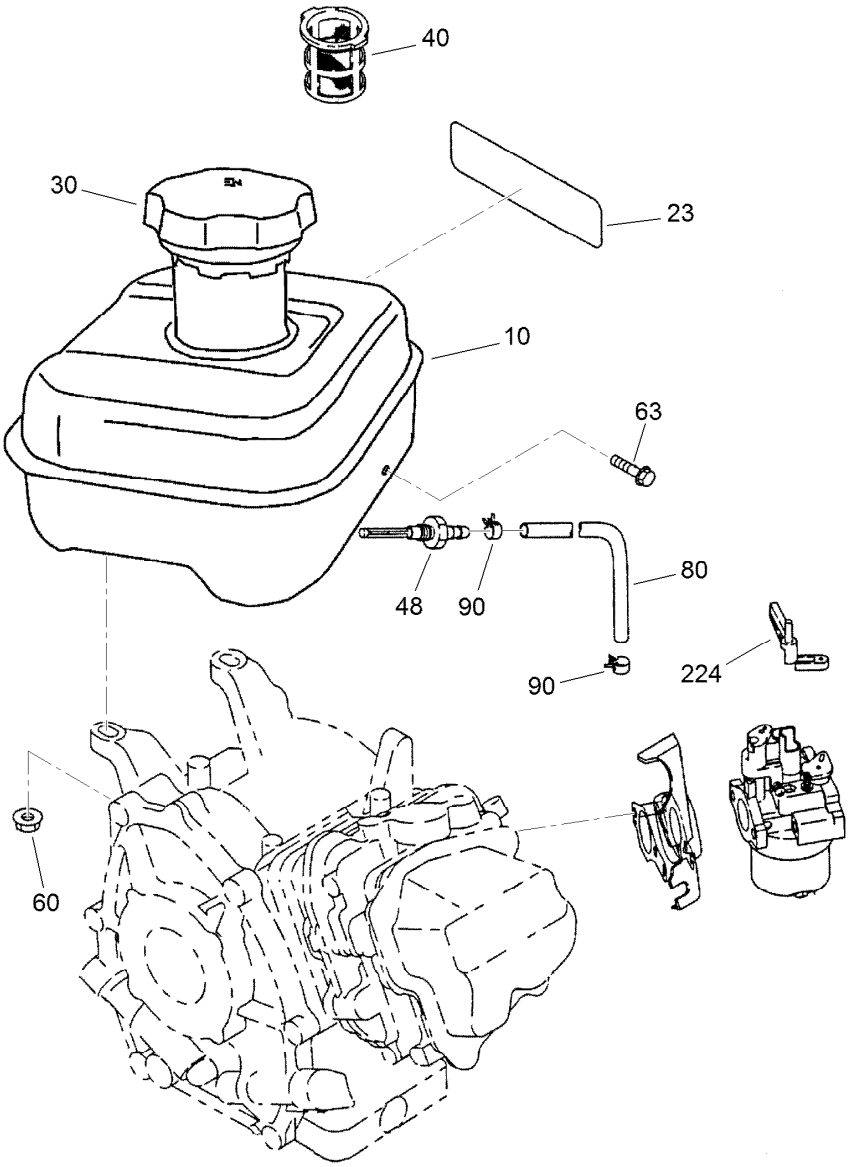


# Fuel Tank Assembly

| Ref. | Part Number | Qty. | Description |
|---|---|---|---|
| 10 | 125-5241 | 1 | Tank-Fuel |
| 23 | 121-0605 | 1 | Label-Model |
| 30 | 121-0684 | 1 | Fuel Tank Cap ASM |
| 40 | 121-0685 | 1 | Filter-Fuel |
| 48 | 121-0542 | 1 | Union |
| 60 | 121-0506 | 2 | Nut-Flange |
| 63 | 121-0517 | 1 | Bolt-Flange |
| 80 | 121-6378 | 1 | Pipe-Rubber |
| 90 | 121-0543 | 2 | Clamp-Hose |
| 224 | 121-0649 | 1 | Lever-Control, Choke |

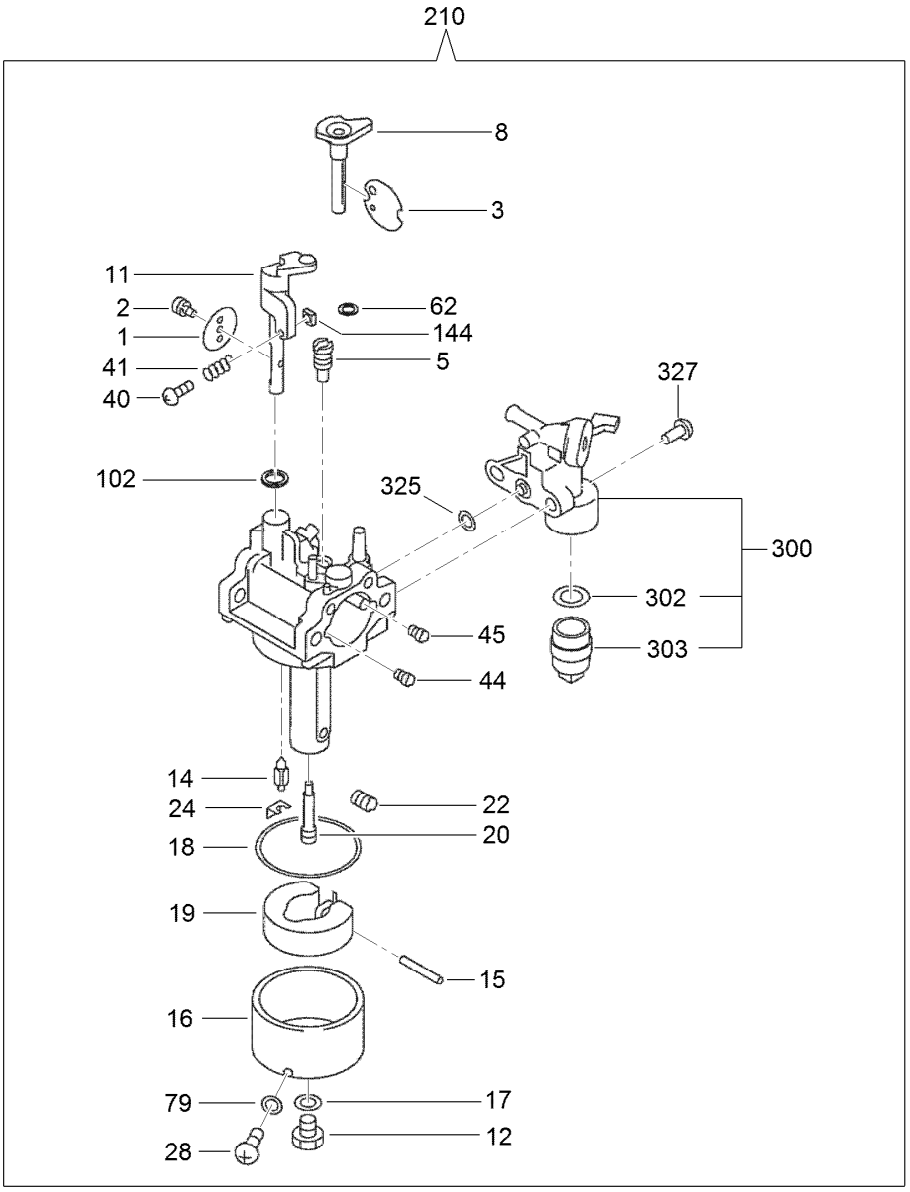


# Carburetor Assembly

| Ref. | Part Number | Qty. | Description |
|---|---|---|---|
| 1 | 121-0553 | 1 | Valve-Throttle |
| 2 | 121-0558 | 1 | Screw |
| 3 | 121-0662 | 1 | Valve-Choke |
| 5 | 121-0574 | 1 | Jet-Pilot |
| 8 | 121-0661 | 1 | Lever-Choke |
| 11 | 121-0602 | 1 | Throttle Shaft ASM |
| 12 | 121-0568 | 1 | Bolt |
| 14 | 121-6366 | 1 | Needle |
| 15 | 121-0660 | 1 | Pin |
| 16 | 121-0659 | 1 | Float Body ASM |
| 17 | 121-0559 | 1 | Packing |
| 18 | 121-0560 | 1 | Packing-Chamber |
| 19 | 121-0562 | 1 | Float |
| 20 | 121-0601 | 1 | Nozzle-Main |
| 22 | 121-0575 | 1 | Jet-Main |
| 24 | 121-0563 | 1 | Clip |

| Ref. | Part Number | Qty. | Description |
|---|---|---|---|
| 28 | 121-0567 | 1 | Bolt |
| 40 | 121-0554 | 1 | Screw |
| 41 | 121-0677 | 1 | Spring |
| 44 | 121-0557 | 1 | Jet-Air |
| 45 | 121-0552 | 1 | Jet-Air, Pilot |
| 62 | 121-0570 | 1 | Seal |
| 79 | 121-0569 | 1 | Packing |
| 102 | 121-0573 | 1 | Seal |
| 144 | 121-0664 | 1 | Nut |
| 210 | 121-6365 | 1 | Carburetor ASM |
| 300 | 121-0675 | 1 | Fuel Strainer ASM |
| 302 | 121-0658 | 1 | Packing |
| 303 | 121-0657 | 1 | Cup |
| 325 | 121-0663 | 1 | O-Ring |
| 327 | 121-0556 | 2 | Screw |

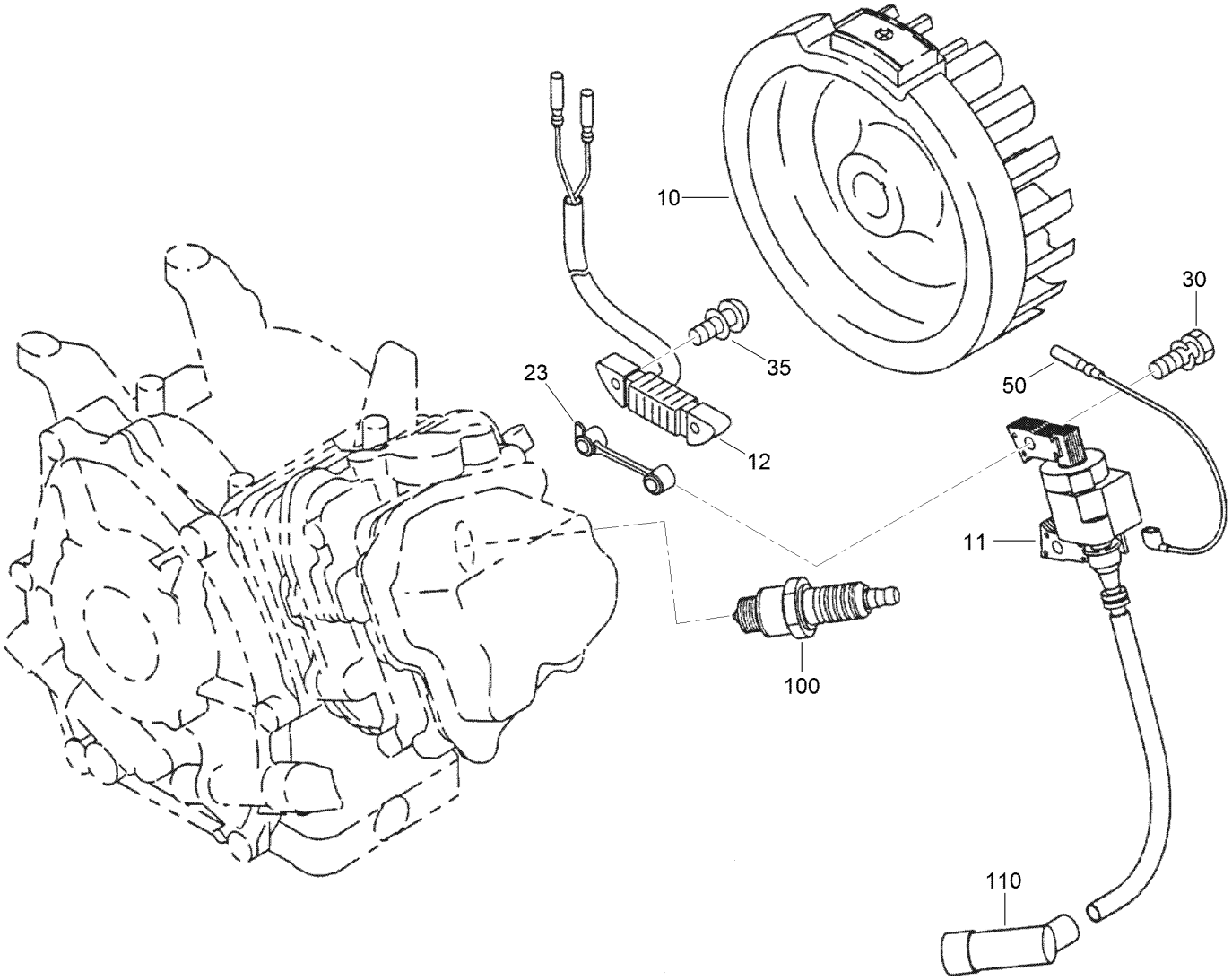


# Flywheel and Coil Assembly

| *Ref.* | *Part Number* | *Qty.* | *Description* |
|---|---|---|---|
| 10 | 121-0604 | 1 | Flywheel ASM |
| 11 | 121-0668 | 1 | Ignition Coil ASM |
| 12 | 121-6368 | 1 | Lamp Coil ASM |
| 23 | 121-0669 | 1 | Spacer |
| 30 | 121-0504 | 2 | Bolt And Washer ASM |
| 35 | 121-6369 | 2 | Bolt And Washer ASM |
| 50 | 121-6370 | 1 | Wire-Coil |
| 100 | 121-0547 | 1 | Plug-Spark |
| 110 | 121-0548 | 1 | Cap-Spark Plug |

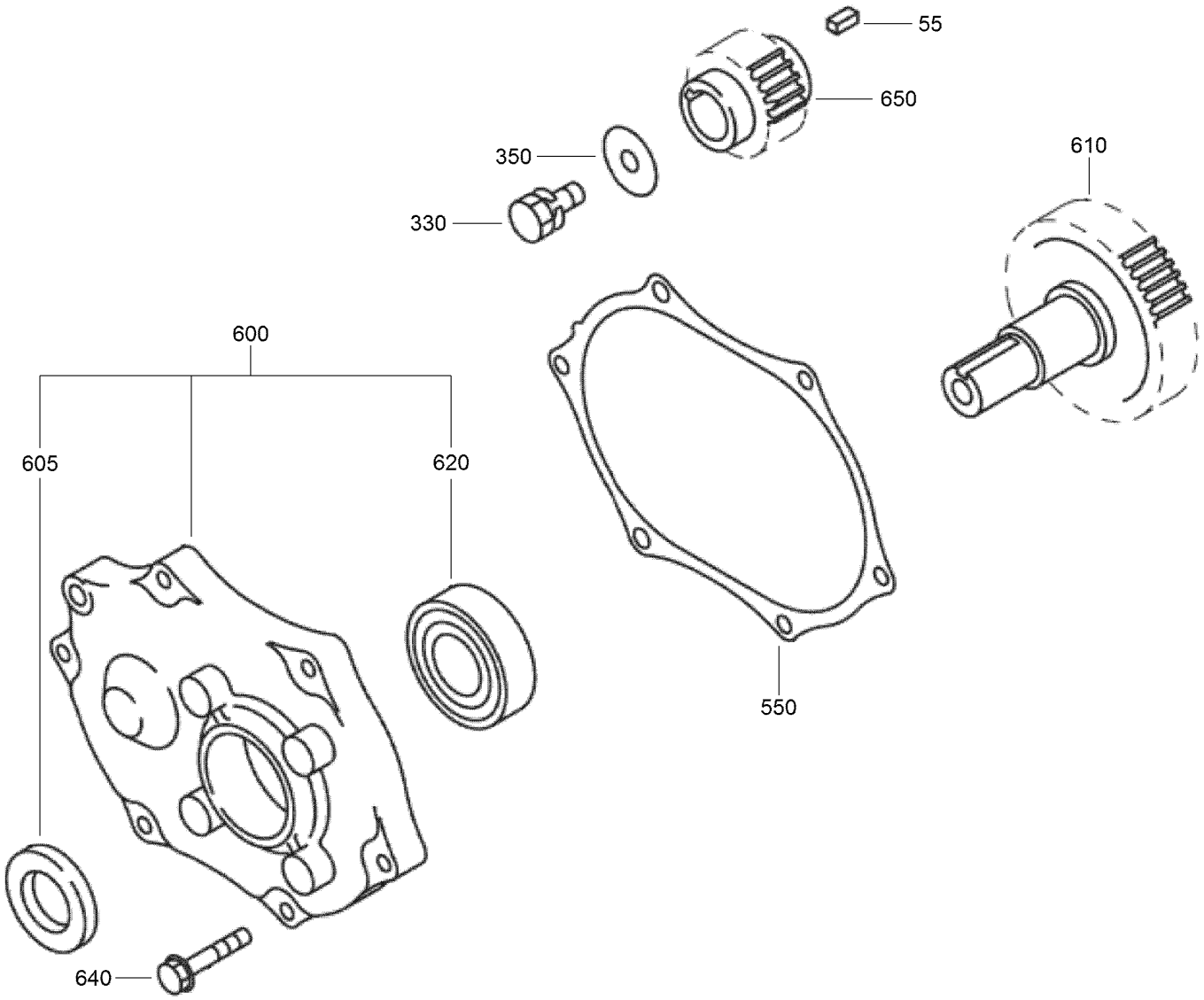


# Gear Reduction Assembly

| *Ref.* | *Part Number* | *Qty.* | *Description* |
|---|---|---|---|
| 55 | 121-0536 | 1 | Key |
| 330 | 121-0501 | 1 | Bolt-Flange |
| 350 | 121-0531 | 1 | Washer |
| 550 | 121-0671 | 1 | Gasket-Cover, Reduction |
| 600 | 121-0670 | 1 | Reduction Cover ASM |
| 605 | 121-0541 | 1 | Seal-Oil |
| 610 | 121-6372 | 1 | Shaft-Driving |
| 620 | 121-0545 | 1 | Bearing-Ball |
| 640 | 121-0518 | 6 | Bolt-Flange |
| 650 | 121-6373 | 1 | Shaft-Driven |

# Attachments and Accessories

## For 04055 Greensmaster 1000 Mower

| Product Name | Model/Part |
|---|---|
| Dethatcher Kit- Dynablade | 04109 |
| Wheel Kit | 04123 |
| Groomer Drive System | 04134 |
| Trans Pro 80 Tow-Behind Trailer | 04238 |
| Trans Pro 100 Tow-Behind Trailer | 04240 |
| Flat Ramp | 04245 |
| Rail Ramp Kit (Update) | 04247 |
| Rail Ramp Conversion Kit (Update) | 04248 |
| Out-Front Brush Kit | 04266 |
| 21in Soft Grooming Brush | 04270 |
| 21in Stiff Grooming Brush | 04271 |
| 21in Spring Steel Groomer Reel | 04283 |
| 21in Carbide Groomer Reel | 04284 |
| 21in Brush Groomer Reel | 04285 |
| LED Light Kit, 2012 and After Greensmaster 800, 1000 and 1600 Series Mower | 04294 |
| LED Light and Wireless Hour Meter Harness Kit, 2012 and After Greensmaster 800, 1000, 1010, 1600, 1610, or Flex Greensmaster 1800, 1820, 2100, or 2120 Series Mower | 04295 |
| Turf Evaluator | 04399 |
| 21in Thin Blade Groomer Reel | 04741 |
| Full Roller ASM (21in) | 104-2642 |
| Brush-Groomer | 105-9640 |
| Roller Rebuild Kit | 107-1588 |
| Bedknife-Tournament, Extended | 108-4302 |
| Bedknife-Microcut, Extended | 108-4303 |
| Blade-Groomer, Helix | 110-2333 |
| Bedknife-Edgemax (21in Fairway) | 112-7475 |
| Bedbar-Aggressive | 112-9279-03 |
| Bedbar-Standard | 112-9281-01 |
| Operator Presence Kit | 112-9282 |
| Smooth Scraper Kit | 112-9285 |
| Scraper Brush Kit | 112-9286 |
| Comb Scraper Kit | 112-9287 |
| Wide Wiehle Scraper Kit | 112-9288 |
| Narrow Wiehle Scraper Kit | 112-9289 |
| Bedknife-Edgemax, Microcut | 115-1880 |
| Bedknife-Edgemax, Tournament Cut | 115-1881 |
| 16-Tooth Traction Pulley Kit | 115-1886 |
| Hourmeter-Wireless | 115-4754 |
| High Altitude Jet-Subaru | 117-0073 |
| 14 Blade Reel ASM | 117-1449 |
| Spark Plug | 121-0547 |
| Element Set | 121-0618 |
| Filter-Fuel | 121-0685 |
| Premium Engine Oil 10w30 (55 Gal) | 121-6392 |
| Premium Engine Oil 10w30 (5 Gallon Pail) | 121-6393 |
| Blade-Groomer, Thin (Carbide) | 121-9531 |

# Attachments and Accessories (continued)

Forward-Rotating Kit ..... 125-3451
Toro Reel Paper (10 Pack) ..... 125-5610
Toro Reel Shim (0.002in) ..... 125-5611
21in Soft Grooming Brush Kit ..... 127-1547
21in Stiff Grooming Brush Kit ..... 127-1548
11 Blade Reel Asm ..... 131-2036
Angle Indicator ..... 131-6828
Angle Indicator Mount ..... 131-6829
MVP Filter and Spark Plug Kit, 2012 and After Walk-Behind Greensmaster Mower ..... 30097
Swaged Roller ASM ..... 52-3590
Bedknife-Fairway ..... 63-8600
Auxiliary Roller Kit ..... 65-8560
.25in Clip Kit ..... 65-9000
Cast Iron Wiehle Roller (Qty 1) ..... 71-1550
Wiehle Roller ASM (.43in Spacing) ..... 88-6790
Bedknife-Microcut ..... 93-4262
Bedknife-Tournament Cut ..... 93-4263
Bedknife-Low Cut ..... 93-4264
Wiehle Roller ASM (2.5in Dia) ..... 93-9045
Bedknife-Highcut ..... 94-6392
Height-of-Cut Bar ..... 94-9010
Wiehle Roller Asm (.20in Spacing) ..... 99-6241

**Notes:**

**Notes:**

**Notes:**

TORO®

Count on it.