FORM NO. 3322–409

TORO®

ProLine

37” Recycler® Cutting Unit

Model No. 30137 – 890103 & Up

Parts Catalog

ORDERING REPLACEMENT PARTS

To order replacement parts, please supply: the part number, the quantity, and the description of each part desired.

Contents

Description	Page
Pulley Assembly	1
Spindle And Blade Assembly	2
Carrier Frame Assembly	3
Note:	

Part Description Abbreviations

Part descriptions in this catalog may include the following abbreviations.

Abbreviation	Meaning
AR	as required
ASM	assembly
CARR	carriage
DEG	degrees
FH	flat head
GA	gauge
HF	hex flange
HFW	hex flange washer
HH	hex head
HHF	hex head flange
HHST	hex head self tapping
HJ	hex jam
HOC	height-of-cut
HS	hex socket
HSBH	hex socket button head
HSFH	hex socket flat head
HSH	hex socket head
HWH	hex washer head
HWHTF	hex washer head thread forming
INC	incorporated
LH	left hand
PH	pan head
PPH	Phillips pan head
PTO	power take off
RH	right hand
SFH	slotted fillister head
SH	square head
SHWH	slotted hex washer head
SPH	slotted pan head
STD	standard
TAP	self tapping
TH	truss head
TTH	Torx truss head
WH	wing head

Important Format Explanations

This catalog uses special formats to convey information in illustrations and parts lists. Specifically, one format is used in conjunction with service assemblies and another with quantities associated with reference numbers.

Service Assemblies

Parts within service assemblies have reference numbers in the form *X:Y. X* is the reference number of the service assembly and *Y* is a sequential number unique to each part within the service assembly.

For example, a wheel assembly might be identified by reference number 6, the tire by 6:1, the valve by 6:2, and the wheel by 6:3. When you order the assembly identified by reference number 6, you receive all parts identified by reference numbers 6:1, 6:2, and 6:3. However, you may also order any part individually.

Reference numbers of this type appear in part lists and as callouts in illustrations.

© The TORO Company — 1998
All Rights Reserved

Reference Numbers with Quantities

Illustrations may have a quantity in parentheses next to a reference number, in the form *X (Y). X* is the reference number. *Y* in parentheses is the quantity of the part identified by the reference number.

For example, the illustration callout 4 (2) indicates that two parts are used in that instance.

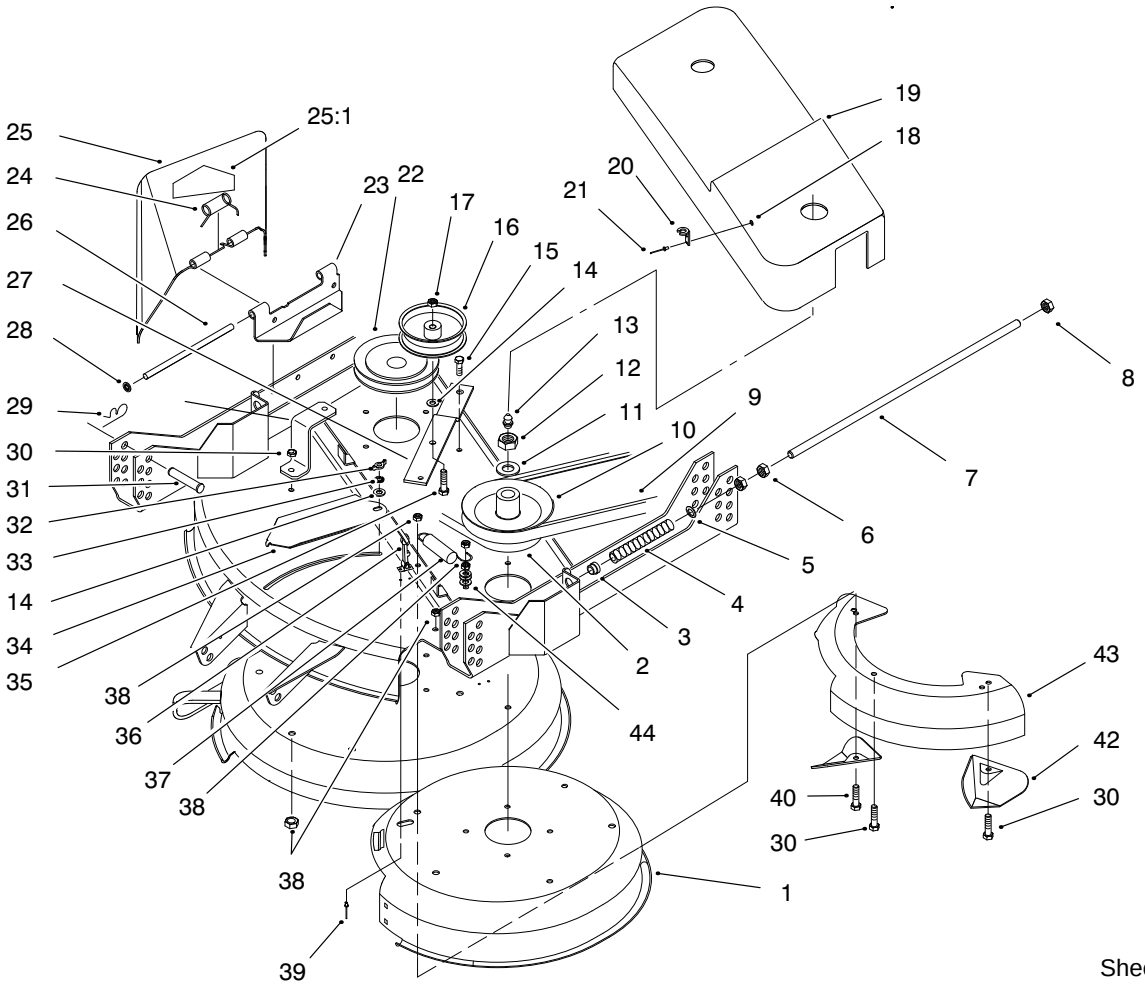

Sheet No.: 2

Pulley Assembly

Ref. No.	Part No.	Qty.	Description
1	92–3140	1	Deck
2	84–4410	1	”v” Belt–Deck
3	256–156	2	Bushing–Flange
4	74–0290	2	Spring–Compression
5	41–8440	2	Spacer–Hardened
6	3218–5	4	Nut–Jam
7	74–0310	2	Shaft–Adjusting
8	3296–45	2	Nut
9	84–4390	1	”v” Belt–Drive
10	84–4360	1	Pulley–Center
11	7–4150	2	Washer
12	32146–20	2	Nut–Lock
13	302–2	2	Fitting–Grease
14	3256–24	2	Washer–Flat
15	19–1471	1	Bolt–Shoulder
16	36–3220	1	Pulley–Idler
17	3296–39	1	Nut–Lock
18	3269–10	4	Washer–Flat
19	84–4350	1	Cover–Pulley
20	117343	2	Latch–Hood
21	3290–415	4	Rivet–Pop
22	84–4440	1	Pulley
23	82–7530	1	Hinge–Deflector
24	40–6230	1	Spring–Torsion
25	99–8511	1	Deflector ASM
25:1	54–9220	1	Decal–Danger

Ref. No.	Part No.	Qty.	Description
26	82–7540	1	Pin–Hinge
27	84–4330	1	Lever–Idler
28	32151–56	2	Ring–Retaining
29	3290–355	4	Pin–Hair
30	322–5	10	Screw–HH
31	283–55	4	Pin–Clevis
32	32103–27	1	Nut–Wing
33	3255–8	1	Washer–Lock
34	84–4420	1	Cover–Slot
35	323–9	1	Screw–HH
36	117344	2	Handle–Latch
37	54–1160	1	Spring–Extension
38	3296–29	13	Nut–Lock
39	3269–13	4	Rivet–Pop
40	322–7	1	Screw–HH
42	84–5761	7	Plate–Kicker
43	92–2937	1	Insert–Deck
44	3256–23	3	Washer–Flat

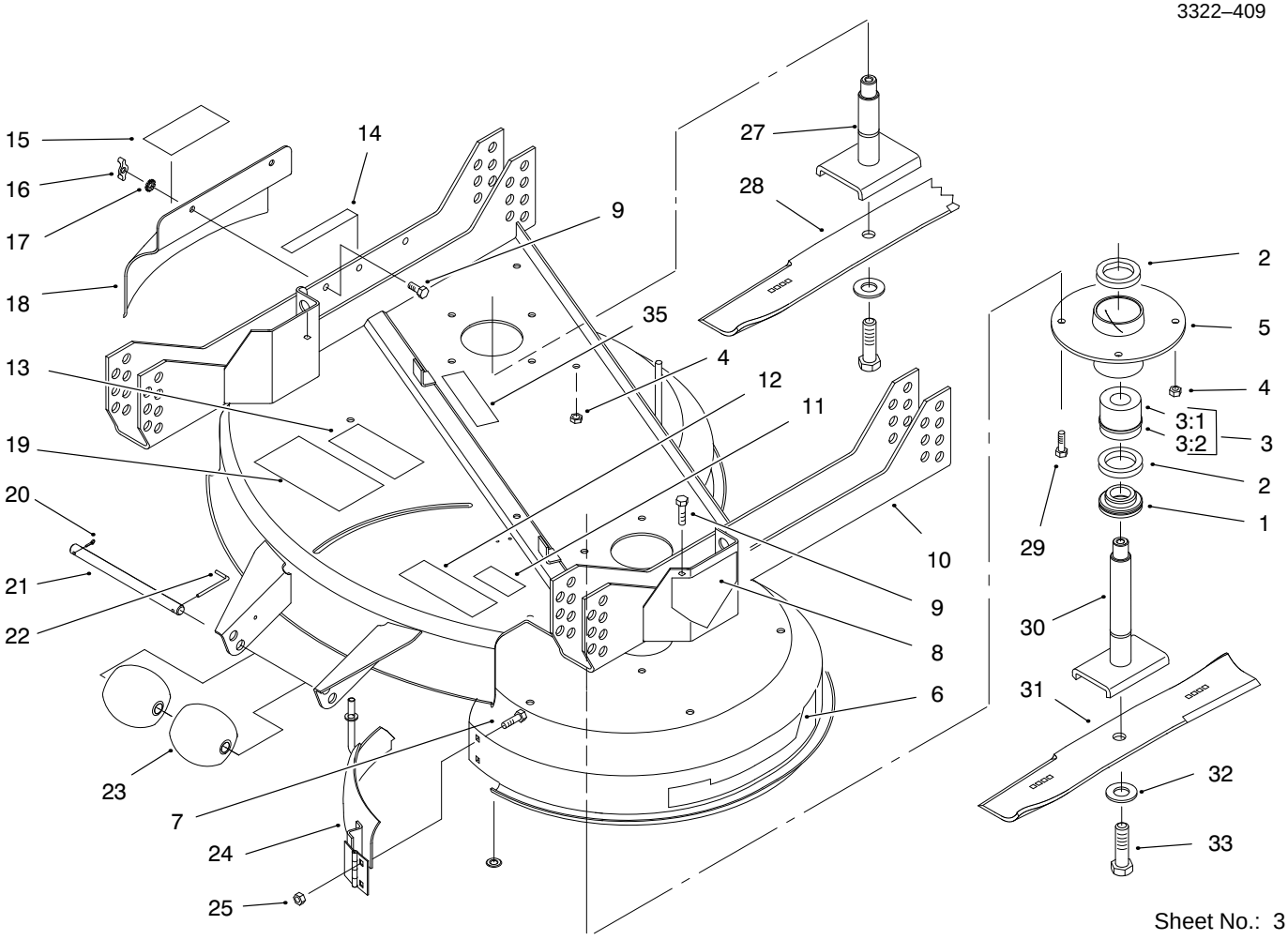

Sheet No.: 3

Spindle And Blade Assembly

Ref. No.	Part No.	Qty.	Description
1	27–0950	2	Spacer–Bearing
2	253–139	4	Seal–Oil
3	46–8530	2	Bearing ASM
3:1	27–0960	2	Bearing ASM
3:2	27–5970	2	Spacer–Matched Set
4	3296–29	9	Nut–Lock
5	82–5990	2	Housing–Spindle
6	84–4340	1	Decal–Recycler
7	3229–22	2	Screw–CARR
8	43–8480	1	Decal–Danger
9	322–5	10	Screw–HH
10	99–8510	1	Support Deck Asm w/Decals
11	88–1270	1	Decal–Safety STD
12	85–7080	1	Decal–Door
13	68–8340	1	Decal–Torque
14	68–3650	1	Decal–Danger
15	82–7490	1	Decal–Danger
16	32103–27	2	Nut–Wing
17	3255–8	2	Washer–Lock
18	86–9870	1	Cover–Discharge
19	66–1340	1	Decal–Discharge
20	3272–11	1	Pin–Cotter
21	40–6400	1	Shaft–Roller
22	57–0690	1	Pin–Cotter
23	29–4820	2	Roller

Ref. No.	Part No.	Qty.	Description
24	92–2932	1	Cover–Front
25	32149–2	2	Nut–Hex Lock
27	84–4430	1	Shaft–Splindle
28	93–0106	1	Blade–21”
29	322–7	1	Screw–HH
30	51–3552	1	Spindle–Center
31	93–0107	1	Blade–17”
32	3253–8	2	Washer–Lock
33	51–4060	2	Bolt–Blade
35	67–5360	1	Decal–Danger

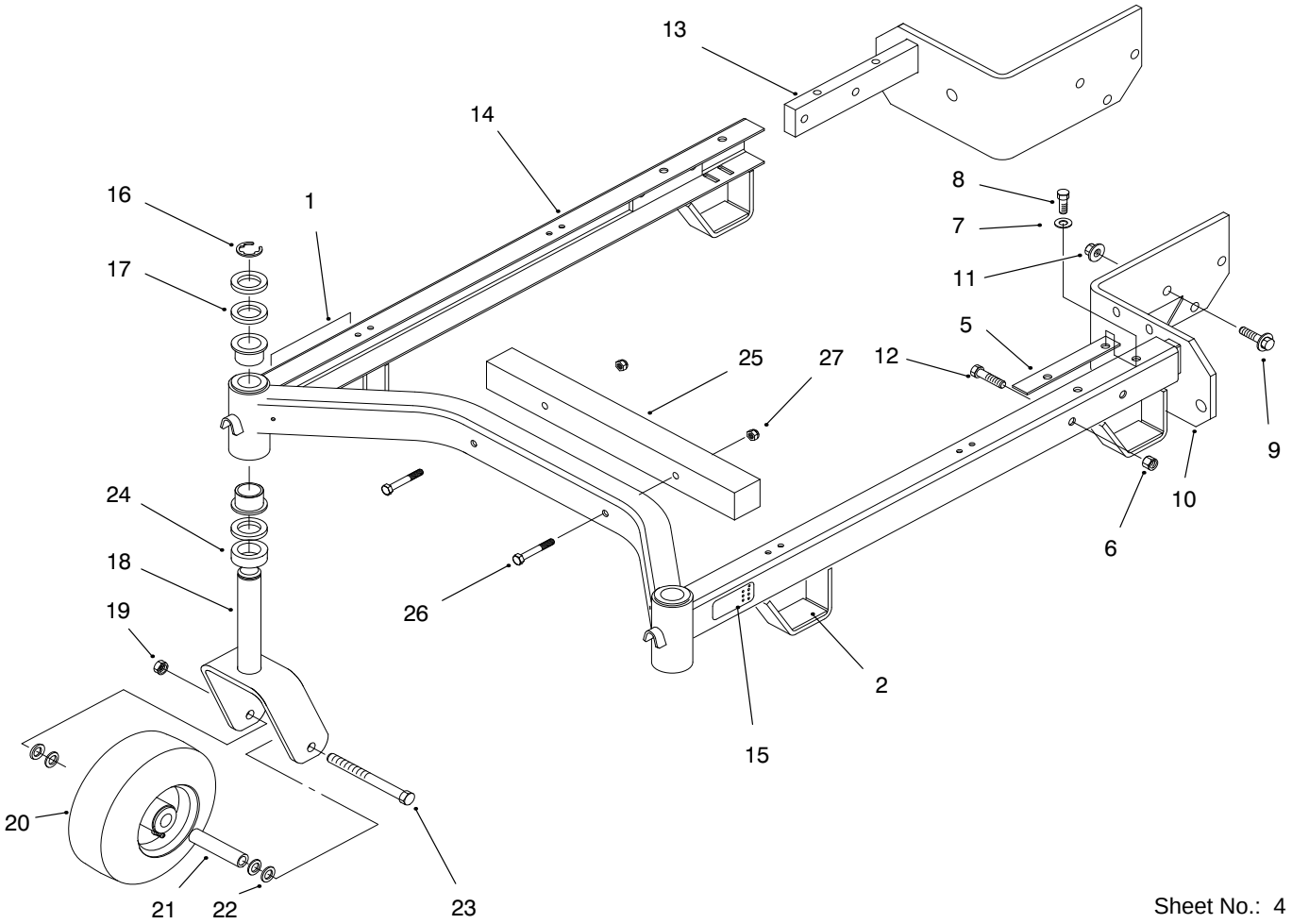

Sheet No.: 4

Carrier Frame Assembly

Ref. No.	Part No.	Qty.	Description
1	85–7450	1	Decal–HOC LH
2	74–0340	4	Cushion–Rubber
5	62–6980	2	Shim–Carrier
6	32152–2	4	Nut–Lock HH
7	3256–24	A/R	Washer–Flat
8	3235–21	4	Screw
9	3234–6	6	Screw–HF
10	86–7100	1	Bracket–LH
11	32128–23	6	Nut–Lock
12	323–9	4	Screw–HH
13	86–7110	1	Bracket RH
14	94–4166	1	Suspension
15	85–7460	1	Decal–HOC RH
16	32151–91	2	Ring–Retaining
17	3–6781	8	Washer–Thrust
18	98–2857	2	Castor Fork ASM
19	32153–5	2	Nut–Lock
20	98–2859	2	Wheel & Tire ASM
*20:1	62–5580	4	Bearing–Outside
*20:2	62–5570	2	Bearing–Roller
*20:3	232–27	2	Valve Stem
*20:4	302–11	2	Fitting–Grease
21	68–8980	2	Bushing–Spanner
22	3256–6	8	Washer–Flat
23	325–19	2	Screw–HH
24	93–1167	2	Spacer–Castor

Ref. No.	Part No.	Qty.	Description
25	80–3340	1	Weight–Front
26	322–12	2	Screw–HH
27	3296–29	2	Nut–Lock

* Not Illustrated

Toro Part Number Index

Part No.	Page No.	Ref. No.	Qty.	Description
117343	1	20	2	Latch–Hood
117344	1	36	2	Handle–Latch
3–6781	3	17	8	Washer–Thrust
7–4150	1	11	2	Washer
19–1471	1	15	1	Bolt–Shoulder
27–0950	2	1	2	Spacer–Bearing
29–4820	2	23	2	Roller
36–3220	1	16	1	Pulley–Idler
40–6230	1	24	1	Spring–Torsion
40–6400	2	21	1	Shaft–Roller
41–8440	1	5	2	Spacer–Hardened
43–8480	2	8	1	Decal–Danger
46–8530	2	3	2	Bearing ASM
51–3552	2	30	1	Spindle–Center
51–4060	2	33	2	Bolt–Blade
54–1160	1	37	1	Spring–Extension
54–9220	1	25:1	1	Decal–Danger
57–0690	2	22	1	Pin–Cotter
62–5570	3	20:2	2	Bearing–Roller
62–5580	3	20:1	4	Bearing–Outside
62–6980	3	5	2	Shim–Carrier
66–1340	2	19	1	Decal–Discharge
67–5360	2	35	1	Decal–Danger
68–3650	2	14	1	Decal–Danger
68–8340	2	13	1	Decal–Torque
68–8980	3	21	2	Bushing–Spanner
74–0290	1	4	2	Spring–Compression
74–0310	1	7	2	Shaft–Adjusting
74–0340	3	2	4	Cushion–Rubber
80–3340	3	25	1	Weight–Front
82–5990	2	5	2	Housing–Spindle
82–7490	2	15	1	Decal–Danger
82–7530	1	23	1	Hinge–Deflector
82–7540	1	26	1	Pin–Hinge
84–4330	1	27	1	Lever–Idler
84–4340	2	6	1	Decal–Recycler
84–4350	1	19	1	Cover–Pulley
84–4360	1	10	1	Pulley–Center
84–4390	1	9	1	”v” Belt–Drive
84–4410	1	2	1	”v” Belt–Deck
84–4420	1	34	1	Cover–Slot
84–4430	2	27	1	Shaft–Splindle
84–4440	1	22	1	Pulley
84–5761	1	42	7	Plate–Kicker
85–7080	2	12	1	Decal–Door
85–7450	3	1	1	Decal–HOC LH
85–7460	3	15	1	Decal–HOC RH
86–7100	3	10	1	Bracket–LH
86–7110	3	13	1	Bracket RH
86–9870	2	18	1	Cover–Discharge
88–1270	2	11	1	Decal–Safety STD
92–2932	2	24	1	Cover–Front
92–2937	1	43	1	Insert–Deck
92–3140	1	1	1	Deck
93–0106	2	28	1	Blade–21”
93–0107	2	31	1	Blade–17”
93–1167	3	24	2	Spacer–Castor
94–4166	3	14	1	Suspension
98–2857	3	18	2	Castor Fork ASM
98–2859	3	20	2	Wheel & Tire ASM
99–8510	2	10	1	Deck Support Asm
99–8511	1	25	1	Deflector ASM

*Not Illustrated

Toro Part Number Index (cont.)

Part No.	Page No.	Ref. No.	Qty.	Description
232−27	3	20:3	2	Valve Stem
253−139	2	2	4	Seal−Oil
256−156	1	3	2	Bushing−Flange
283−55	1	31	4	Pin−Clevis
302−2	1	13	2	Fitting−Grease
302−11	3	20:4	2	Fitting−Grease
322−5	1	30	10	Screw−HH
322−5	2	9	10	Screw−HH
322−7	1	40	1	Screw−HH
322−7	2	29	1	Screw−HH
322−12	3	26	2	Screw−HH
323−9	1	35	1	Screw−HH
323−9	3	12	4	Screw−HH
325−19	3	23	2	Screw−HH
3218−5	1	6	4	Nut−Jam
3229−22	2	7	2	Screw−CARR
3234−6	3	9	6	Screw−HF
3235−21	3	8	4	Screw−HH
3253−8	2	32	2	Washer−Lock
3255−8	1	33	1	Washer−Lock
3255−8	2	17	2	Washer−Lock
3256−6	3	22	8	Washer−Flat
3256−23	1	44	3	Washer−Flat
3256−24	1	14	2	Washer−Flat
3256−24	3	7	A/R	Washer−Flat
3269−10	1	18	4	Washer−Flat
3269−13	1	39	4	Rivet−Pop
3272−11	2	20	1	Pin−Cotter
3290−355	1	29	4	Pin−Hair
3290−415	1	21	4	Rivet−Pop
3296−29	1	38	13	Nut−Lock
3296−29	2	4	9	Nut−Lock
3296−29	3	27	2	Nut−Lock
3296−39	1	17	1	Nut−Lock
3296−45	1	8	2	Nut
32103−27	1	32	1	Nut−Wing
32103−27	2	16	2	Nut−Wing
32128−23	3	11	6	Nut−Lock
32146−20	1	12	2	Nut−Lock
32149−2	2	25	2	Nut−Hex Lock
32151−56	1	28	2	Ring−Retaining
32151−91	3	16	2	Ring−Retaining
32152−2	3	6	4	Nut−Lock HH
32153−5	3	19	2	Nut−Lock

*Not Illustrated