Form No. 3387-681 Rev D

TORO®

Count on it.

Parts Catalog

# Workman® HDX-Auto Utility Vehicle

**Model No. 07390—Serial No. 314000001 and Up**

**Model No. 07390H—Serial No. 314000001 and Up**

Register at www.Toro.com.
Original Instructions (EN)

*3387-681* D

# Ordering Replacement Parts

To order replacement parts, please supply the part number, the quantity, and the description of each part desired.

### Understanding Reference Numbers

Each identified part in an illustration has a reference number. The reference number for a part also appears in the parts list, along with other information about the part.

This catalog uses two special reference number formats, one to indicate parts in a service assembly and another to indicate the quantity of a given part in an illustration.

### Service Assembly Reference Numbers

Parts in service assemblies have reference numbers in the form a:b. The a represents the reference number of the entire service assembly and the b represents a sequential number unique to each part within the service assembly.

For example, a wheel assembly might be identified by reference number 6, the tire by 6:1, the valve by 6:2, and the wheel by 6:3. When you order the assembly identified by reference number 6, you receive all parts identified by reference numbers 6:1,6:2, and 6:3. However, you may also order any part individually. Reference numbers of this type appear in illustration and in parts lists.

### Reference Numbers Indicating Quantity

In an illustration, if a reference number indicates more than one part, the reference number has the form nX y. The n represents the quantity of the part, the X is the multiplication symbol, and the y represents the reference number.

For example, in an illustration, the reference number 2X 37 means that two of the parts identified by reference number 37 are indicated.

# Contents


Front Frame Assembly . . . 4
Rear Frame and Suspension Assembly . . . 5
Rear Axle and Tire Assembly . . . 6
Brake Caliper Assembly No. 127-7424 . . . 7
Front and Rear Brake Line Assembly . . . 8
Front Suspension Assembly . . . 9
Steering and Front Wheel Assembly . . . 10
Steering Linkage Assembly . . . 11
Hydraulic Cylinder Assembly No. 112-3217 . . . 12
Front Control Arm Assembly . . . 13
Master Cylinder and Brake Pedal Assembly . . . 14
Master Cylinder Assembly No. 104-6782 . . . 15
Accelerator Pedal Assembly . . . 16
Center Console Assembly . . . 17
Bumper, Hood and Seat Base Assembly . . . 19
Dash Assembly . . . 20
Steering Hydraulic Assembly . . . 21
Steering Valve Assembly No. 120-4813 . . . 22
Seat Assembly . . . 23
Roll-Over Protection System Assembly . . . 24
Full Bed and Side Panel Assembly . . . 25
Engine and Transmission Support Assembly . . . 26
Engine and Exhaust Assembly . . . 27
Cooling System Assembly . . . 29
Radiator and Fan Assembly . . . 30
Clutch Assembly . . . 31
Primary Clutch Assembly No. 121-9739 . . . 33
Secondary Clutch Assembly No. 121-9740 . . . 34
Speed Limiter Cover Assembly . . . 35
Transmission Assembly . . . 36
Transmission Assembly No. 121-9603 . . . 37
Rear Drive Assembly . . . 39
Differential Assembly No. 121-9604 . . . 40
Driveshaft Assembly No. 121-9832 . . . 41
Battery Installation Assembly . . . 42
Rear Tail Light and Fender Assembly . . . 43
Fuel System Assembly . . . 44
Hydraulic Lift Valve Assembly . . . 45
Control Valve Assembly No. 43-1950 . . . 47
Hydraulic Cylinder Assembly No. 106-7939 . . . 48
Hydraulic Pump, Tank and Filter Assembly . . . 49
Hydraulic Gear Pump Assembly No. 114-8302 . . . 50
Air Cleaner Assembly . . . 51
Air Cleaner Assembly No. 119-9714 . . . 52
Electrical Assembly . . . 53
Attachments and Accessories . . . 54



**© 2018—The Toro® Company**


**8111 Lyndale Avenue South**
**Bloomington, MN 55420**





**Contact us at www.Toro.com.**
**Printed in the USA.**


**All Rights Reserved**

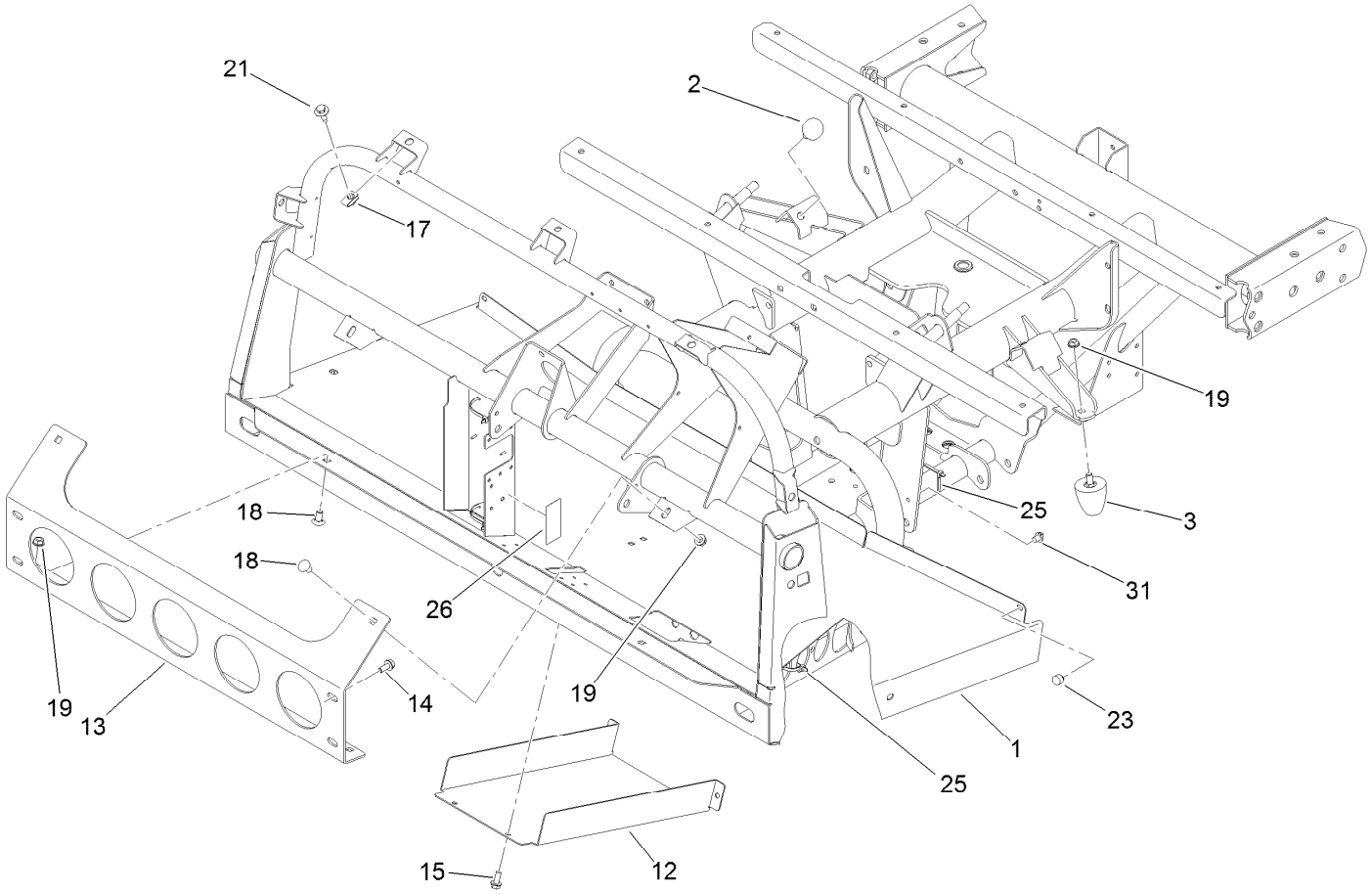


# Front Frame Assembly

| *Ref.* | *Part Number* | *Qty.* | *Description* |
|---|---|---|---|
| 1 | 121-9745-03 | 1 | Frame-Front |
| 2 | 87-2440 | 2 | Bumper-Rubber |
| 3 | 26-0071 | 2 | Snubber-Rubber |
| 12 | 106-2427-03 | 1 | Cover |
| 13 | 114-8272-03 | 1 | Bracket-Bumper |
| 14 | 3234-5 | 4 | Screw-HHF |
| 15 | 32144-11 | 4 | Screw-HWHTF |
| 17 | 94-2413 | 7 | Nut-U |
| 18 | 3231-21 | 4 | Screw-CARR |
| 19 | 3290-357 | 6 | Nut-HHF, Whiz |
| 21 | 114-8418 | 7 | Screw-HWH, Sems |
| 23 | 107-8042 | 2 | Bumper-Rubber |
| 25 | 3290-379 | 7 | Tie-Cable |
| 26 | 127-8626 | 1 | Decal-Electrical |
| 31 | 32180-030 | 2 | Clip-Tie |

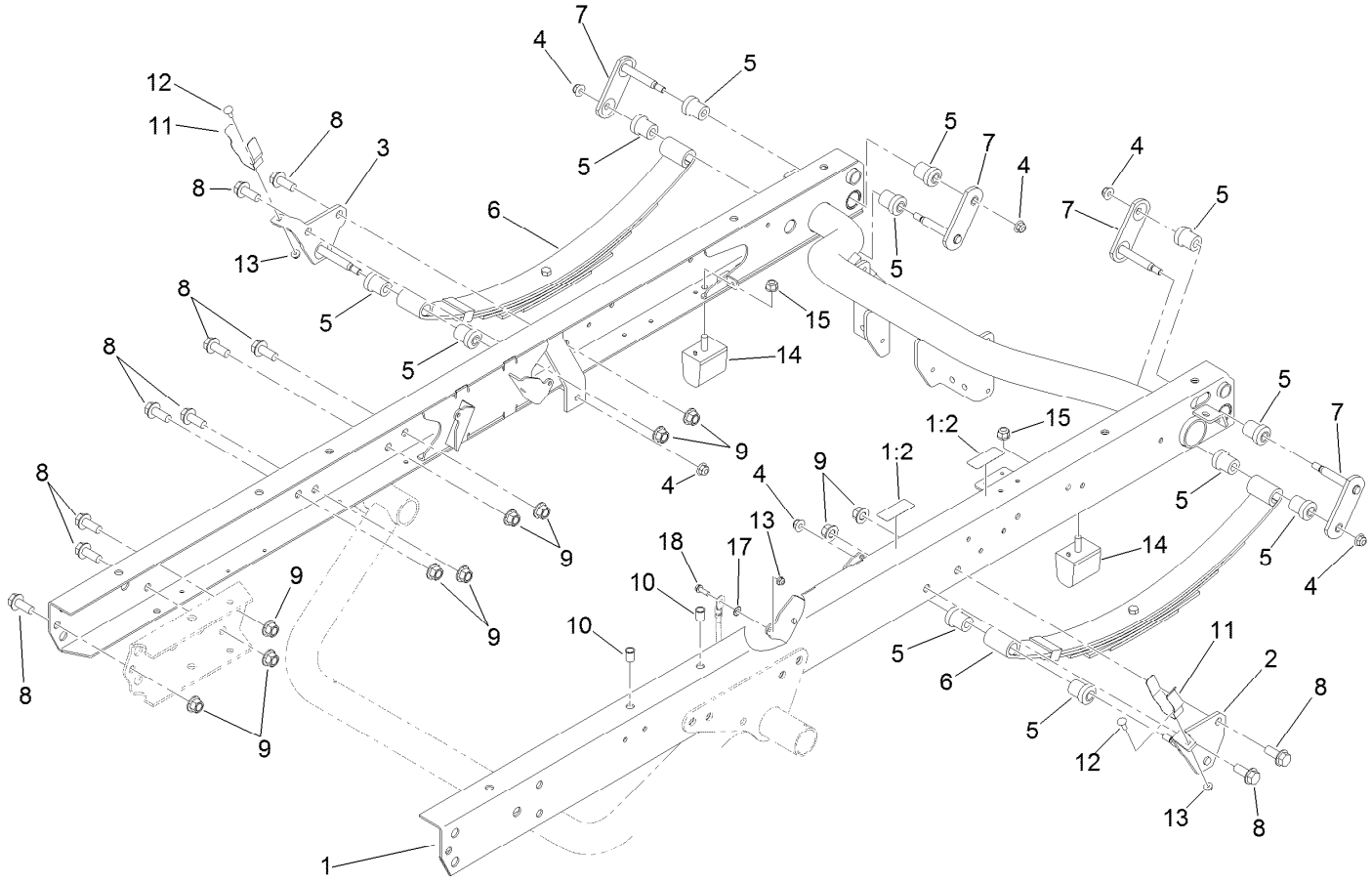


# Rear Frame and Suspension Assembly

| Ref. | Part Number | Qty. | Description |
|---|---|---|---|
| 1 | 115-7911 | 1 | Rear Frame ASM |
| 1:2 | 115-2047 | 2 | Decal-Surface, Hot |
| 2 | 87-3960 | 1 | Mount-Spring, LH |
| 3 | 87-3940 | 1 | Mount-Spring, RH |
| 4 | 104-8301 | 6 | Nut-HF, NI |
| 5 | 87-4760 | 12 | Bushing-Rubber |
| 6 | 87-1490 | 2 | Spring-Leaf, Rear |
| 7 | 87-3980 | 4 | Shackle ASM |
| 8 | 3234-38 | 18 | Screw-HHF |

| Ref. | Part Number | Qty. | Description |
|---|---|---|---|
| 9 | 99-5107 | 18 | Nut-Lock |
| 10 | 32148-9 | 4 | Insert-Nut |
| 11 | 108-3109 | 2 | Retainer-Cylinder |
| 12 | 3229-1 | 2 | Bolt-CARR |
| 13 | 104-7201 | 3 | Nut-HF |
| 14 | 87-3470 | 2 | Bumper |
| 15 | 103-9511 | 2 | Nut-Lock, NI |
| 17 | 3255-8 | 1 | Washer-Lock |
| 18 | 32105-15 | 1 | Screw-HWH |

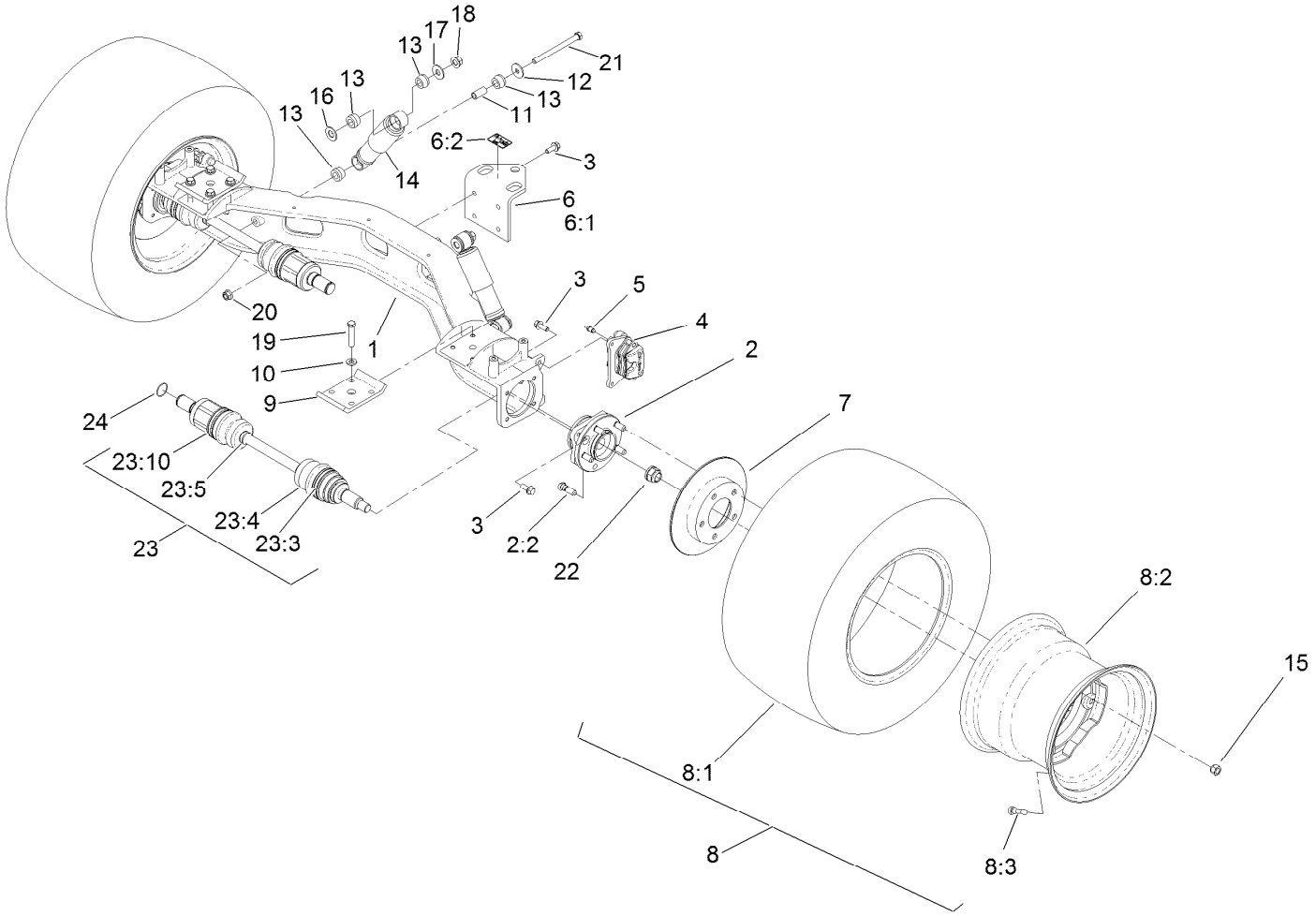


# Rear Axle and Tire Assembly

| Ref. | Part Number | Qty. | Description |
|---|---|---|---|
| 1 | 119-9515 | 1 | Axle-Rear |
| 2 | 121-9751 | 2 | Hub-Bearing, Wheel |
| 2:2 | 121-9752 | 5 | Stud-Wheel |
| 3 | 3234-11 | 16 | Screw-HHF |
| 4 | 127-7424 | 2 | Brake Caliper ASM |
| 5 | 119-9509 | 2 | Screw-Bleed |
| 6 | 115-7742 | 1 | Hitch ASM |
| 6:1 | 92-5951-03 | 1 | Angle-Hitch |
| 6:2 | 115-7740 | 1 | Decal-Load, Towing |
| 7 | 114-8351 | 2 | Rotor-Brake |
| 8 | 114-8288 | 2 | Tire And Wheel ASM |
| 8:1 | 106-7868 | 1 | Tire |
| 8:2 | 114-8259 | 1 | Wheel |
| 8:3 | 232-27 | 1 | Stem-Valve |
| 9 | 87-7470-03 | 2 | Plate-Spring, Clamp |
| 10 | 87-7480 | 8 | Washer |
| 11 | 87-3600 | 2 | Spacer-Absorber, Shock |

| Ref. | Part Number | Qty. | Description |
|---|---|---|---|
| 12 | 87-5330 | 2 | Washer |
| 13 | 87-3920 | 8 | Bushing |
| 14 | 87-3110 | 2 | Absorber-Shock |
| 15 | 242-50 | 10 | Nut-Lug |
| 16 | 3256-27 | 2 | Washer-Flat |
| 17 | 3256-6 | 2 | Washer-Flat |
| 18 | 99-5107 | 2 | Nut-Lock |
| 19 | 115-2398 | 8 | Bolt-HH |
| 20 | 114-8417 | 2 | Nut-HF, NI |
| 21 | 114-8424 | 2 | Screw-HH |
| 22 | 115-2164 | 2 | Nut-Spindle |
| 23 | 121-9744 | 2 | Axle ASM |
| 23:3 | 107-2894 | 1 | Clamp-Boot |
| 23:4 | 107-2896 | 2 | Boot |
| 23:5 | 107-2895 | 2 | Clamp-Boot |
| 23:10 | 107-2893 | 1 | Clamp-Boot |
| 24 | 340-64 | 2 | O-Ring |

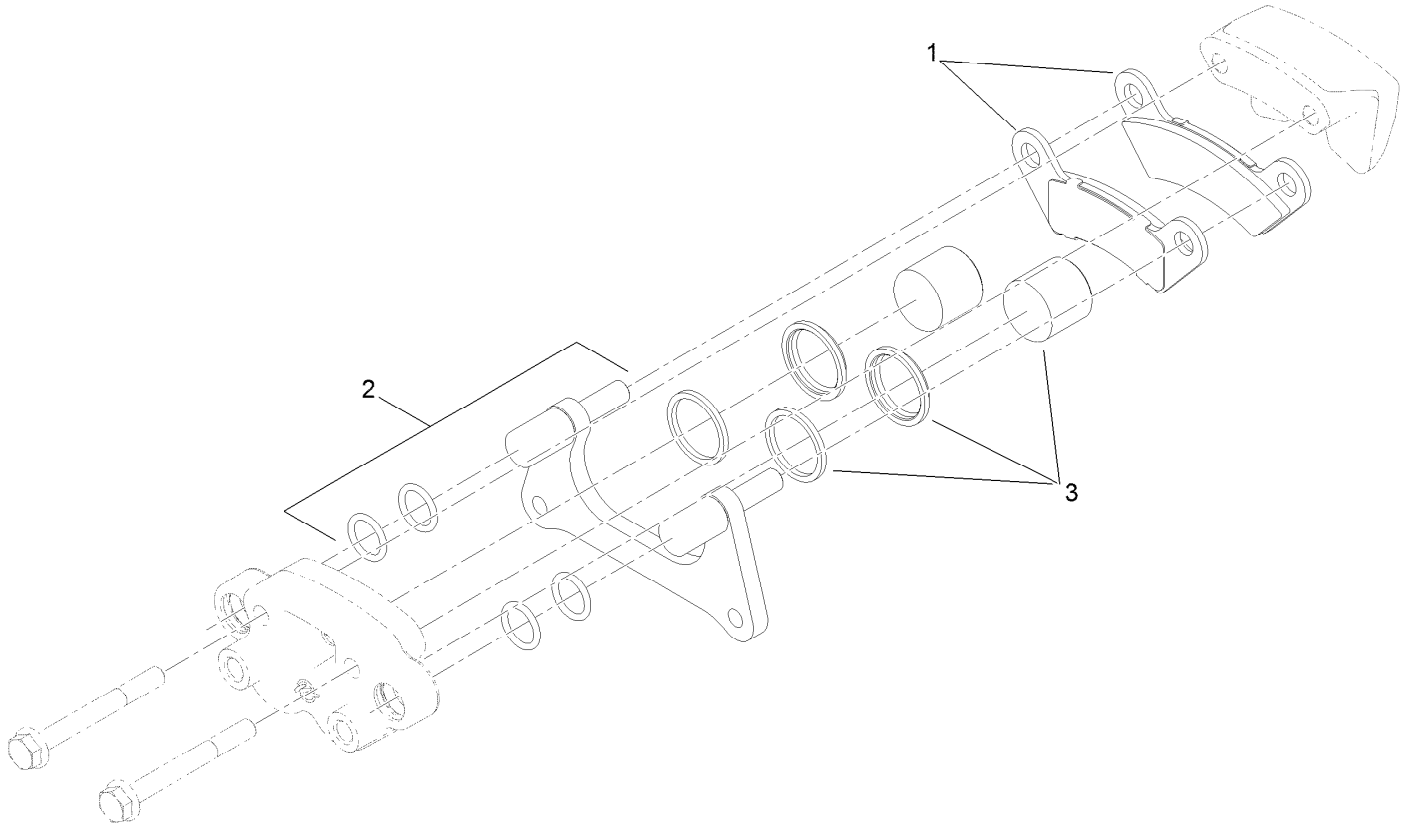


# Brake Caliper Assembly No. 127-7424

| *Ref.* | *Part Number* | *Qty.* | *Description* |
|---|---|---|---|
| 1 | 119-9510 | 1 | Pads-Brake |
| 2 | 119-9511 | 1 | Bracket Kit |
| 3 | 119-9512 | 1 | Piston Kit |

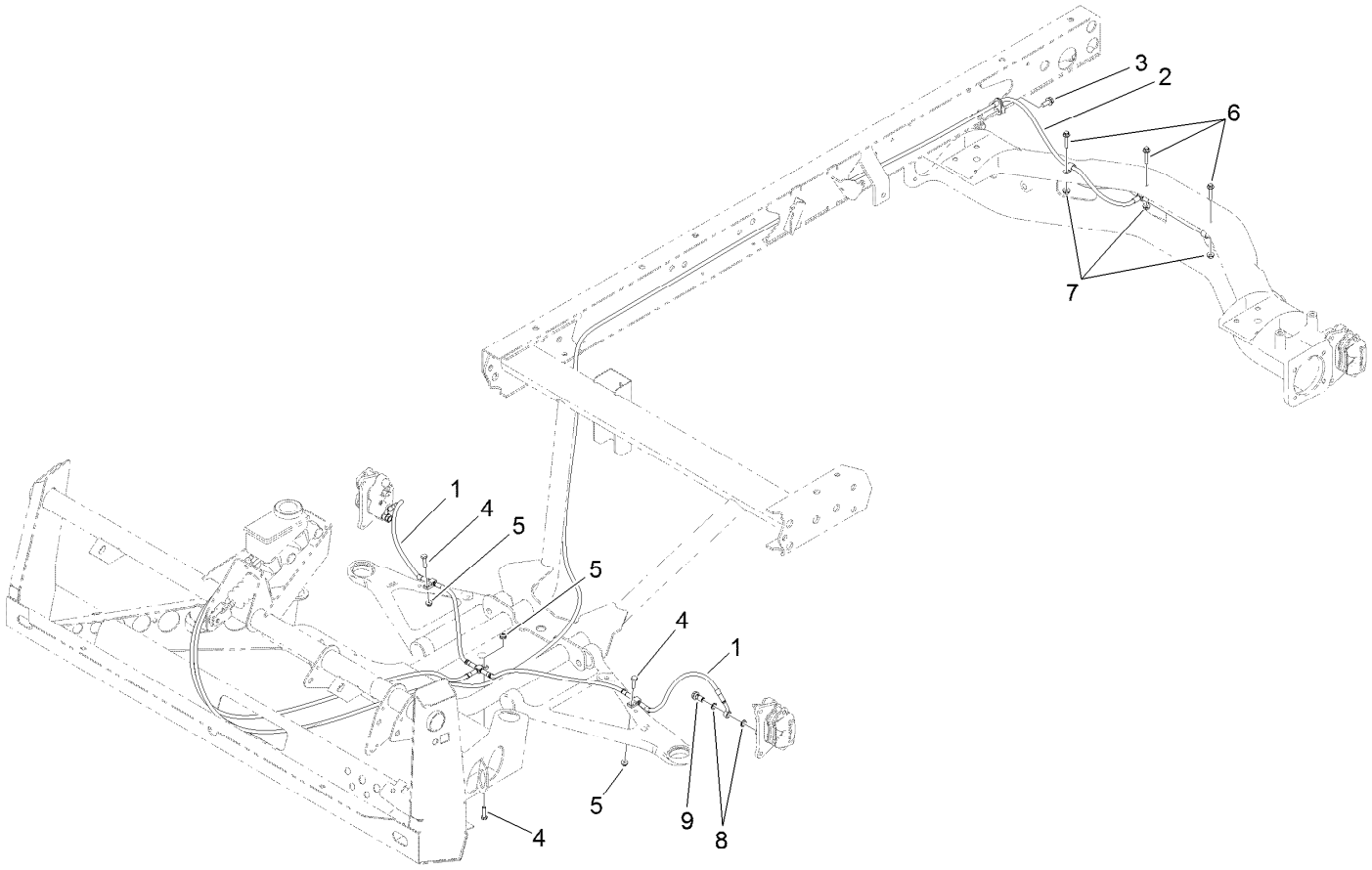


# Front and Rear Brake Line Assembly

| *Ref.* | *Part Number* | *Qty.* | *Description* |
|---|---|---|---|
| 1 | 119-9682 | 1 | Front Brake Line ASM |
| 2 | 119-9681 | 1 | Rear Brake Line ASM |
| 3 | 32144-11 | 1 | Screw-HWHTF |
| 4 | 321-6 | 3 | Screw-HH |
| 5 | 104-7201 | 3 | Nut-HF |
| 6 | 3234-21 | 3 | Screw-HHF |
| 7 | 32128-33 | 3 | Nut-HF |
| 8 | 115-2341 | 8 | Washer-Banjo |
| 9 | 120-4875 | 4 | Bolt-Flange, Banjo |

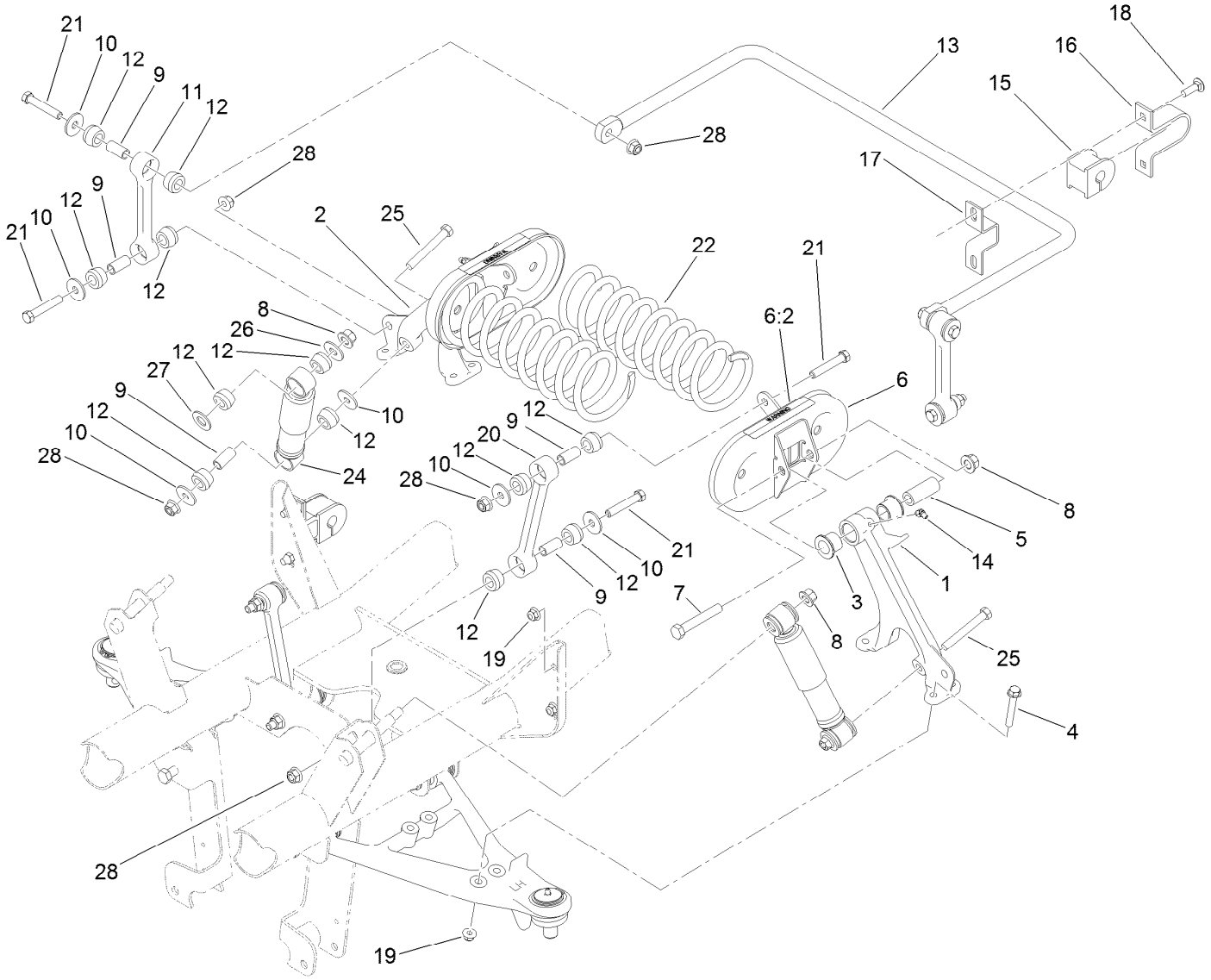


# Front Suspension Assembly

| Ref. | Part Number | Qty. | Description |
|---|---|---|---|
| 1 | 87-0160 | 1 | Tower-Control Arm, LH |
| 2 | 87-0150 | 1 | Tower-Control Arm, RH |
| 3 | 33-3090 | 4 | Bushing |
| 4 | 3234-39 | 8 | Screw-HHF |
| 5 | 87-2500 | 2 | Sleeve-Spring, Pivot |
| 6 | 105-7958 | 2 | Spring Cradle ASM |
| 6:2 | 93-9879 | 1 | Decal-Warning |
| 7 | 325-13 | 2 | Screw-HH |
| 8 | 99-5107 | 4 | Nut-Lock |
| 9 | 87-3600 | 10 | Spacer-Absorber, Shock |
| 10 | 87-5330 | 12 | Washer |
| 11 | 119-6725 | 2 | Link, Anti-Sway Bar |
| 12 | 87-3920 | 24 | Bushing |
| 13 | 87-3850-03 | 1 | Bar-Sway, Anti |

| Ref. | Part Number | Qty. | Description |
|---|---|---|---|
| 14 | 302-11 | 2 | Fitting-Lube, 45 DEG |
| 15 | 87-3910 | 2 | Bushing-Rubber |
| 16 | 87-4010-03 | 2 | Clamp-Bar, Sway |
| 17 | 87-3890-03 | 2 | Bracket-Bar, Sway |
| 18 | 3231-25 | 4 | Bolt-CARR |
| 19 | 104-8301 | 12 | Nut-HF, NI |
| 20 | 119-6724 | 2 | Link-Stabilizer |
| 21 | 324-10 | 8 | Screw-HH |
| 22 | 105-4183-01 | 2 | Spring-Compression |
| 24 | 87-3110 | 2 | Absorber-Shock |
| 25 | 324-13 | 2 | Screw-HH |
| 26 | 3256-6 | 2 | Washer-Flat |
| 27 | 3256-27 | 2 | Washer-Flat |
| 28 | 114-8417 | 10 | Nut-HF, NI |

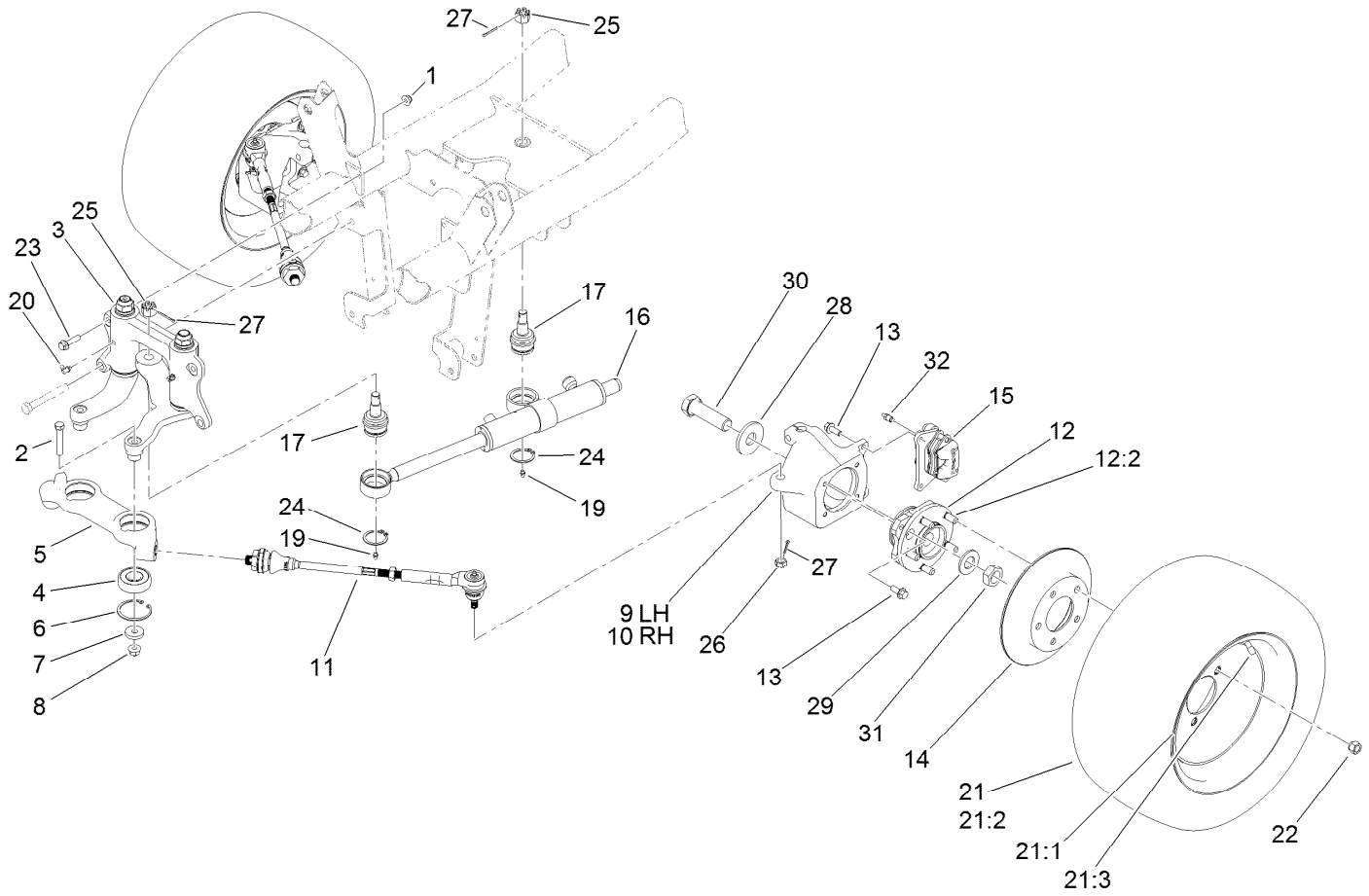


# Steering and Front Wheel Assembly

| Ref. | Part Number | Qty. | Description |
|---|---|---|---|
| 1 | 104-8301 | 2 | Nut-HF, NI |
| 2 | 324-10 | 2 | Screw-HH |
| 3 | | 1 | Steering Linkage ASM ● |
| 4 | 119-9548 | 2 | Bearing-Ball |
| 5 | 114-8296 | 1 | Link-Center |
| 6 | 32120-22 | 2 | Ring-Snap, Internal |
| 7 | 112843 | 2 | Washer |
| 8 | 114-8417 | 2 | Nut-HF, NI |
| 9 | 119-9513 | 1 | Knuckle-LH |
| 10 | 119-9514 | 1 | Knuckle-RH |
| 11 | 114-8356 | 2 | Tie Rod ASM |
| 12 | 121-9751 | 2 | Hub-Bearing, Wheel |
| 12:2 | 121-9752 | 5 | Stud-Wheel |
| 13 | 3234-11 | 12 | Screw-HHF |
| 14 | 114-8351 | 2 | Rotor-Brake |
| 15 | 127-7424 | 2 | Brake Caliper ASM |
| 16 | 112-3217 | 1 | HYD Cylinder ASM |
| 17 | 106-6774 | 2 | Joint-Ball |

| Ref. | Part Number | Qty. | Description |
|---|---|---|---|
| 19 | 302-5 | 2 | Fitting-Grease |
| 20 | 302-60 | 2 | Fitting-Grease |
| 21 | 120-4902 | 2 | Tire And Wheel ASM |
| 21:1 | 120-4901 | 1 | Wheel |
| 21:2 | 114-8273 | 1 | Tire |
| 21:3 | 232-27 | 1 | Stem-Valve |
| 22 | 242-50 | 10 | Nut-Lug |
| 23 | 114-4681 | 2 | Screw-HHF |
| 24 | 32151-104 | 2 | Ring-Retaining, External |
| 25 | 32136-14 | 2 | Nut-Hst |
| 26 | 32136-3 | 2 | Nut-SHH |
| 27 | 3272-12 | 4 | Pin-Cotter |
| 28 | 104-0719 | 2 | Washer-Hardened |
| 29 | 3256-62 | 2 | Washer-Flat |
| 30 | 115-2173 | 2 | Screw-HH |
| 31 | 3296-49 | 2 | Nut-Lock, NI |
| 32 | 119-9509 | 2 | Screw-Bleed |

● Not serviced separately

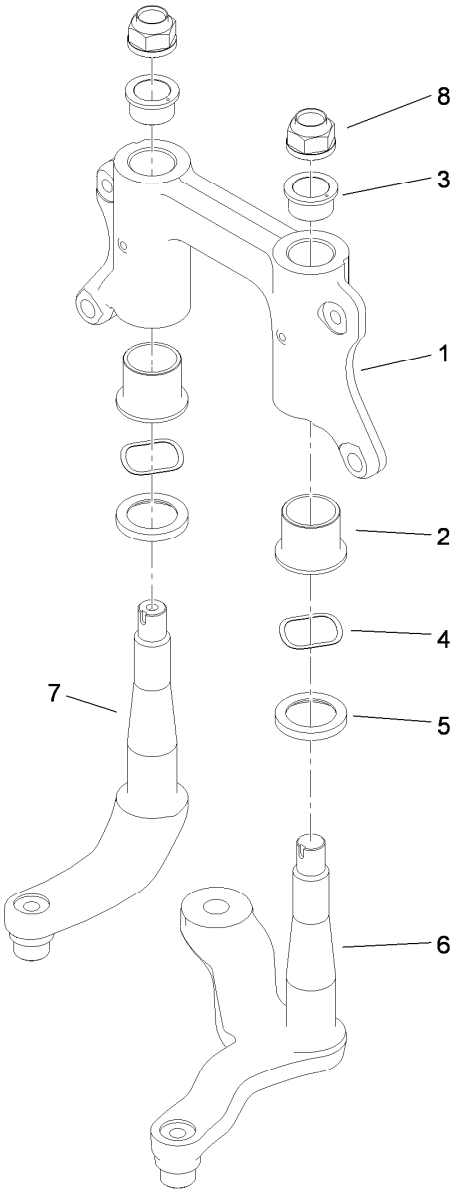


# Steering Linkage Assembly

| *Ref.* | *Part Number* | *Qty.* | *Description* |
|---|---|---|---|
| 1 | 114-8389 | 1 | Mount-Pivot |
| 2 | 69-6470 | 2 | Bushing-Castor |
| 3 | 112-1626 | 2 | Bushing-Flange |
| 4 | 93-4632 | 2 | Washer-Wavey |
| 5 | 86-6560 | 2 | Washer-Thrust |
| 6 | 114-8256 | 1 | Arm-Pitman |
| 7 | 114-8298 | 1 | Arm-Idler |
| 8 | 115-2164 | 2 | Nut-Spindle |

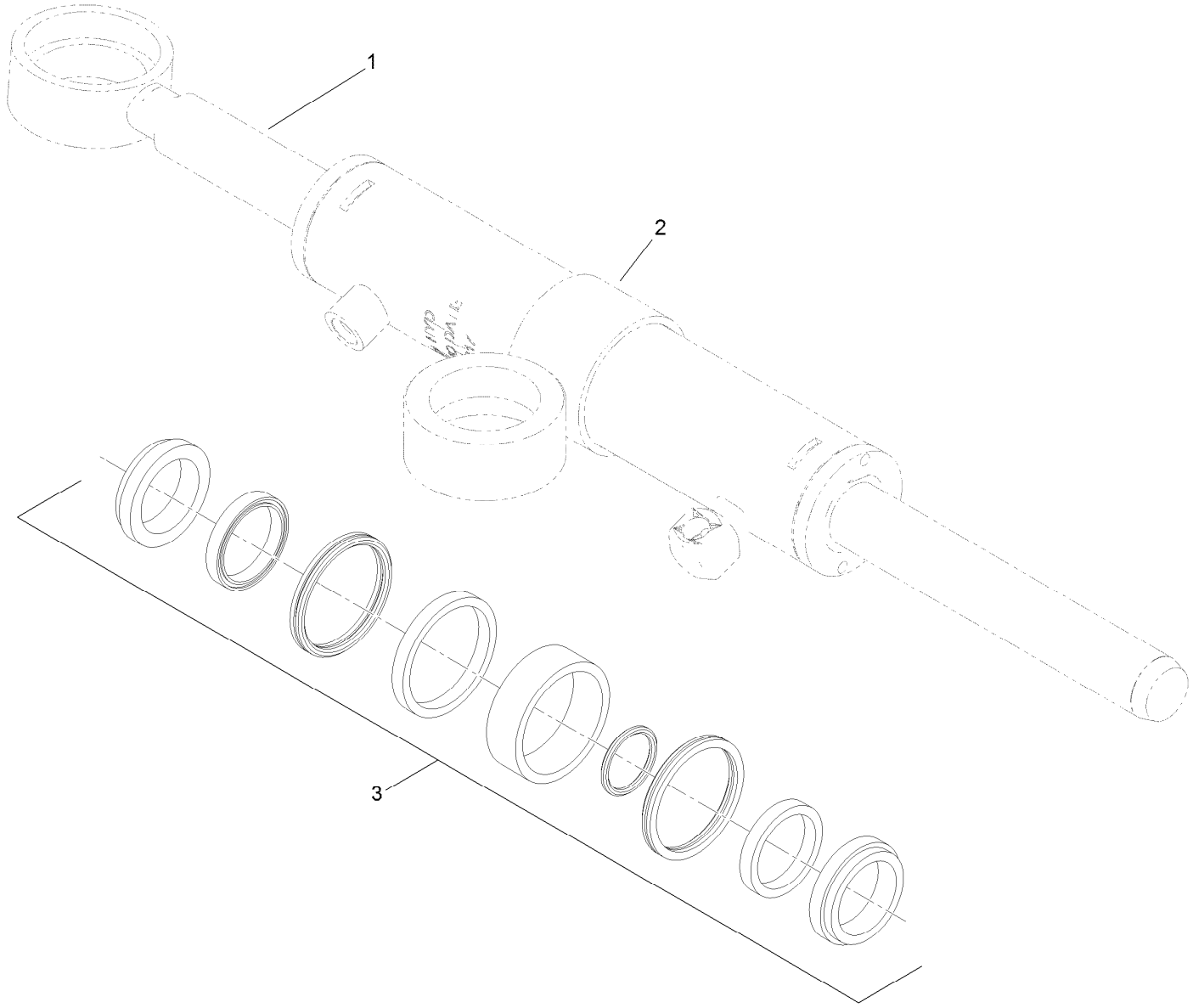


# Hydraulic Cylinder Assembly No. 112-3217

| Ref. | Part Number | Qty. | Description |
|---|---|---|---|
| 1 | | 1 | Rod-Cylinder ● |
| 2 | | 1 | Body-Cylinder ● |
| 3 | 115-2160 | 1 | Cylinder Repair Kit |

● Not serviced separately

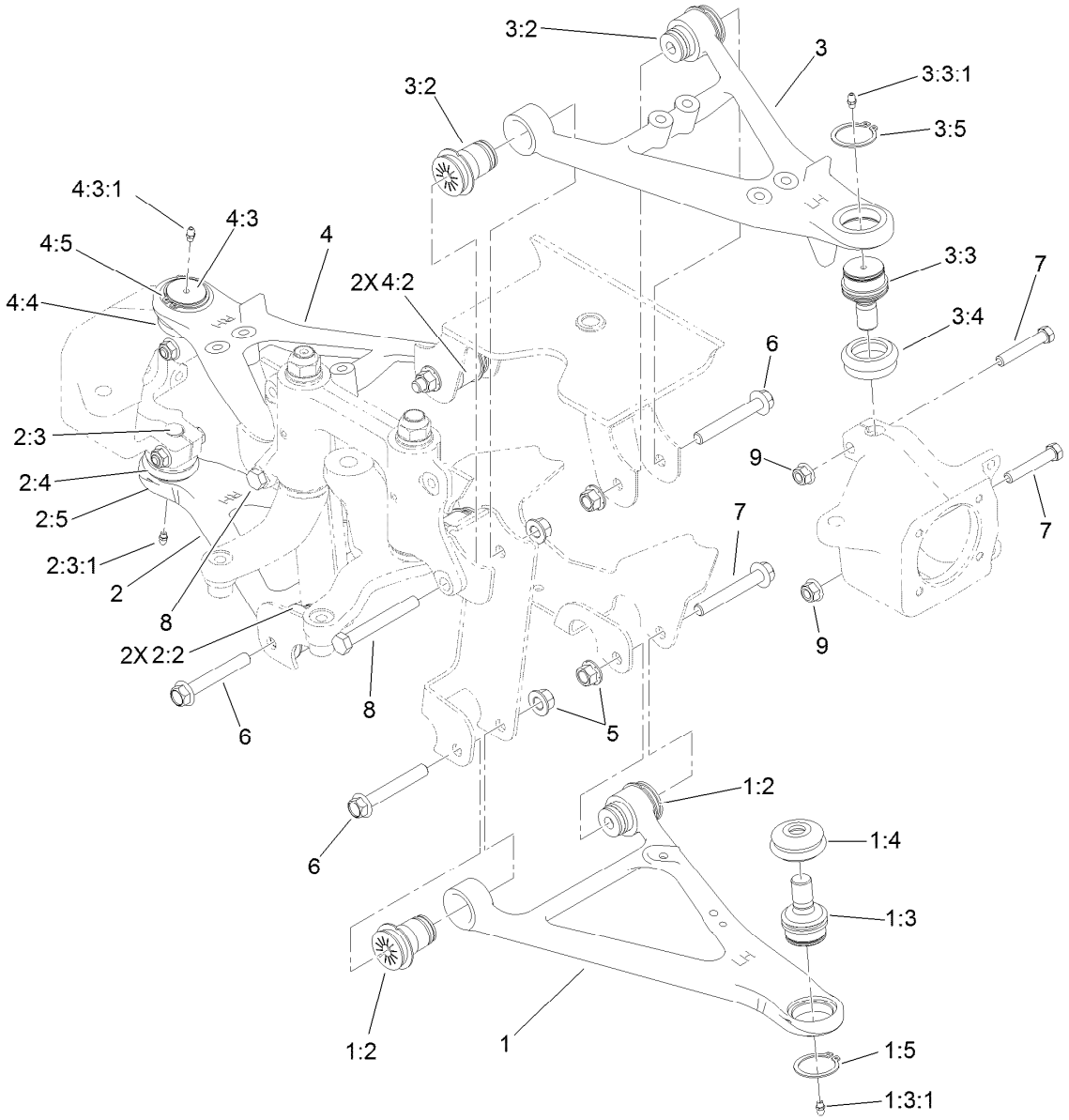


# Front Control Arm Assembly

| Ref. | Part Number | Qty. | Description |
|---|---|---|---|
| 1 | 115-2405 | 1 | Lower LH Control Arm ASM |
| 1:2 | 87-1450 | 2 | Bushing-Flange |
| 1:3 | 115-2165 | 1 | Ball Joint |
| 1:3:1 | 302-5 | 1 | Fitting-Grease |
| 1:4 | 87-2420 | 1 | Seal-Joint, Ball |
| 1:5 | 32151-104 | 1 | Ring-Retaining, External |
| 2 | 115-2407 | 1 | Lower RH Control Arm ASM |
| 2:2 | 87-1450 | 2 | Bushing-Flange |
| 2:3 | 115-2165 | 1 | Ball Joint |
| 2:3:1 | 302-5 | 1 | Fitting-Grease |
| 2:4 | 87-2420 | 1 | Seal-Joint, Ball |
| 2:5 | 32151-104 | 1 | Ring-Retaining, External |
| 3 | 115-2404 | 1 | Upper LH Control Arm ASM |
| 3:2 | 87-1450 | 2 | Bushing-Flange |
| 3:3 | 115-2165 | 1 | Ball Joint |

| Ref. | Part Number | Qty. | Description |
|---|---|---|---|
| 3:3:1 | 302-5 | 1 | Fitting-Grease |
| 3:4 | 87-2420 | 1 | Seal-Joint, Ball |
| 3:5 | 32151-104 | 1 | Ring-Retaining, External |
| 4 | 115-2406 | 1 | Upper RH Control Arm ASM |
| 4:2 | 87-1450 | 2 | Bushing-Flange |
| 4:3 | 115-2165 | 1 | Ball Joint |
| 4:3:1 | 302-5 | 1 | Fitting-Grease |
| 4:4 | 87-2420 | 1 | Seal-Joint, Ball |
| 4:5 | 32151-104 | 1 | Ring-Retaining, External |
| 5 | 99-5107 | 8 | Nut-Lock |
| 6 | 114-8419 | 6 | Screw-HHF |
| 7 | 324-10 | 4 | Screw-HH |
| 8 | 325-17 | 2 | Screw-HH |
| 9 | 114-8417 | 4 | Nut-HF, NI |

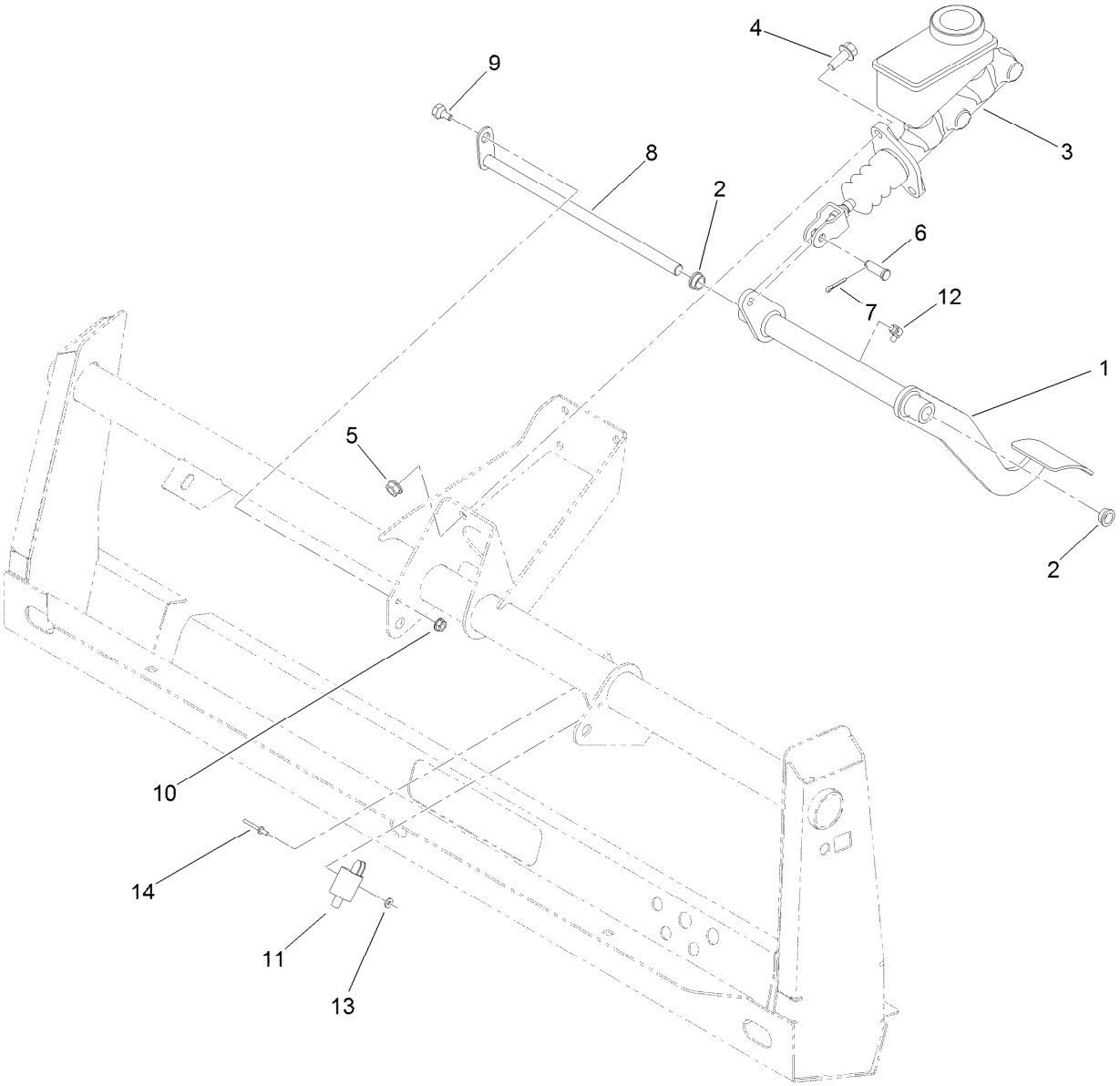


# Master Cylinder and Brake Pedal Assembly

| *Ref.* | *Part Number* | *Qty.* | *Description* |
|---|---|---|---|
| 1 | 120-5023-03 | 1 | Pedal-Brake |
| 2 | 256-156 | 2 | Bushing-Flange |
| 3 | 104-6782 | 1 | Master Cylinder ASM |
| 4 | 3234-11 | 2 | Screw-HHF |
| 5 | 3290-357 | 2 | Nut-HHF, Whiz |
| 6 | 283-2 | 1 | Pin-Clevis |
| 7 | 3272-10 | 1 | Pin-Cotter |
| 8 | 106-2475 | 1 | Shaft-Brake |
| 9 | 63-3410 | 1 | Screw-Shoulder |
| 10 | 32128-33 | 1 | Nut-HF |
| 11 | 95-1653 | 1 | Switch-Pole, Single |
| 12 | 302-60 | 1 | Fitting-Grease |
| 13 | 3256-21 | 2 | Washer-Flat |
| 14 | 3269-25 | 2 | Rivet-Pop |

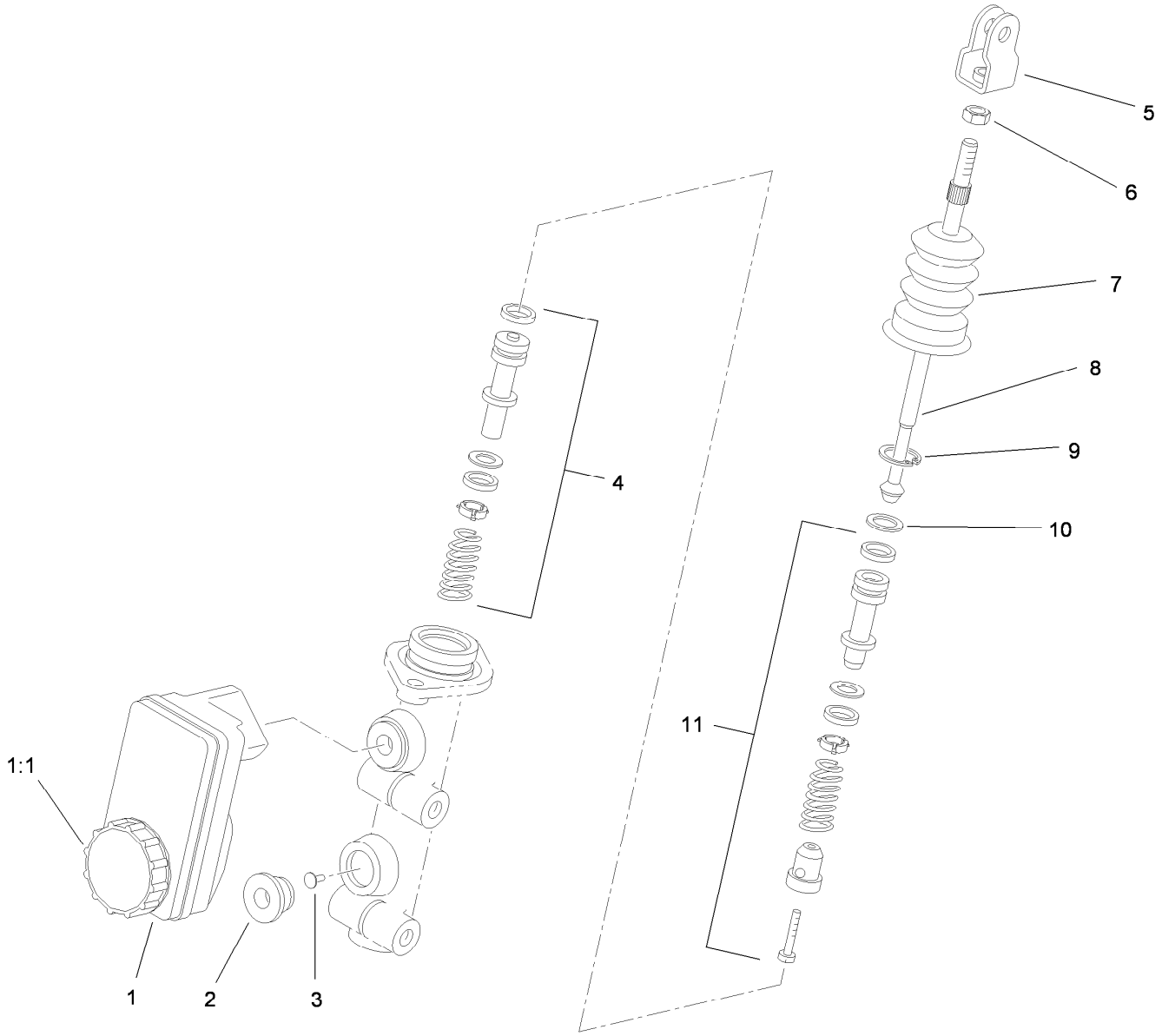


# Master Cylinder Assembly No. 104-6782

| *Ref.* | *Part Number* | *Qty.* | *Description* |
|---|---|---|---|
| 1 | 104-6845 | 1 | Reservoir ASM |
| 1:1 | 92-4112 | 1 | Cap ASM |
| 2 | 93-8971 | 2 | Seal-Port, Flange |
| 3 | 92-4103 | 1 | Pin-Stop |
| 4 | 92-4102 | 1 | Secondary Piston ASM |
| 5 | 92-4110 | 1 | Clevis |
| 6 | 21-0360 | 1 | Nut-Hex |
| 7 | 94-5209 | 1 | Cover-Dust |
| 8 | 94-5210 | 1 | Rod-Push |
| 9 | 92-4109 | 1 | Ring-Snap |
| 10 | 92-4108 | 1 | Retainer-Washer |
| 11 | 92-4101 | 1 | Primary Piston ASM |

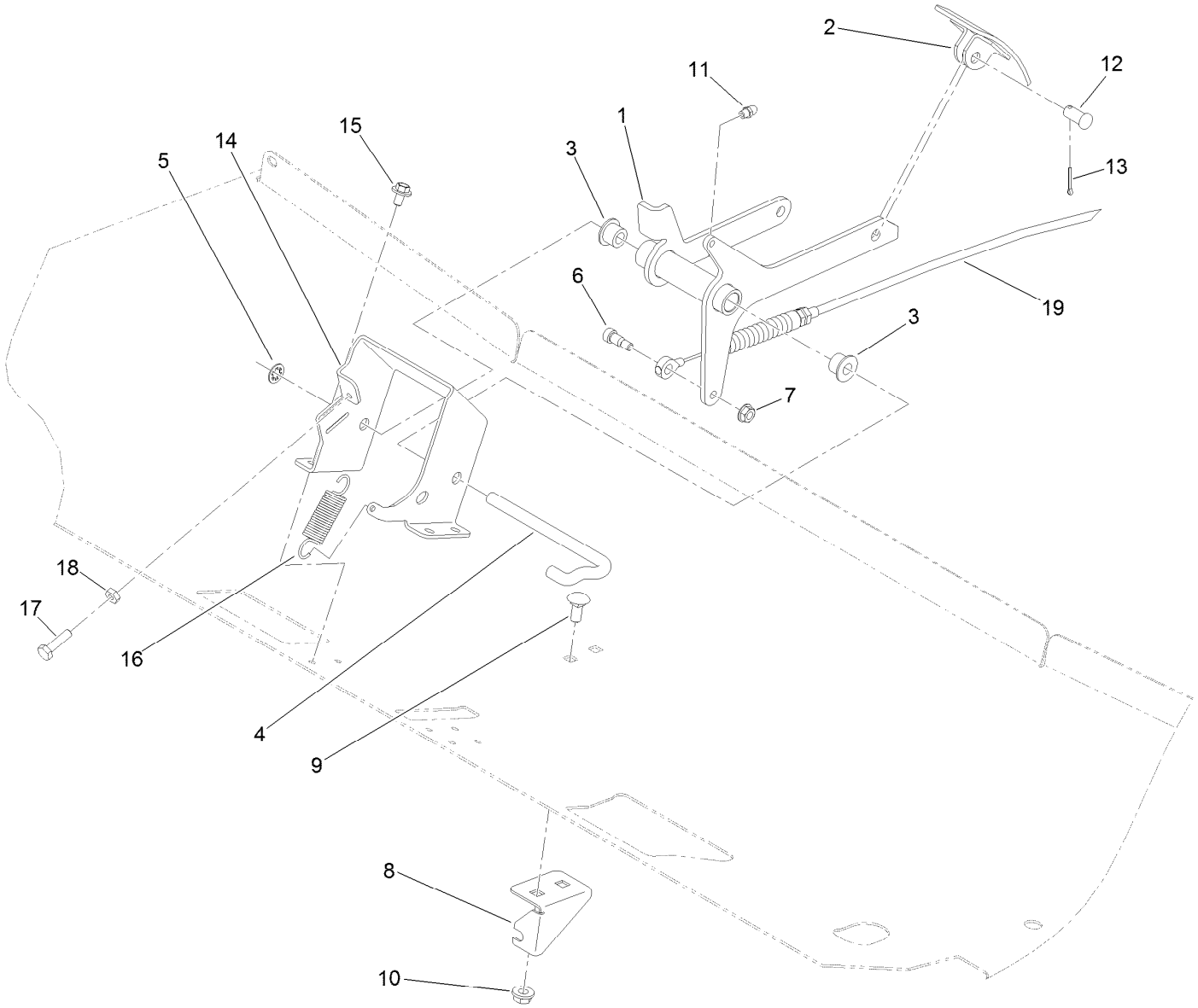


# Accelerator Pedal Assembly

| Ref. | Part Number | Qty. | Description |
|---|---|---|---|
| 1 | 120-4983-03 | 1 | Pedal-Accelerator |
| 2 | 93-8969-03 | 1 | Pedal |
| 3 | 256-259 | 2 | Bushing-Flange |
| 4 | 87-2880 | 1 | Shaft-Pedal, Accelerator |
| 5 | 32151-56 | 1 | Ring-Retaining, External |
| 6 | 119-4881 | 1 | Bolt-Shoulder |
| 7 | 32128-33 | 1 | Nut-HF |
| 8 | 120-4982 | 1 | Bracket-Mount, Cable |
| 9 | 3230-1 | 2 | Bolt-CARR |
| 10 | 32128-20 | 2 | Nut-HF |

| Ref. | Part Number | Qty. | Description |
|---|---|---|---|
| 11 | 302-5 | 1 | Fitting-Grease |
| 12 | 283-85 | 1 | Pin-Clevis |
| 13 | 3272-6 | 1 | Pin-Cotter |
| 14 | 127-8625-03 | 1 | Bracket-Mount, Pedal |
| 15 | 46-6810 | 4 | Screw And Washer ASM |
| 16 | 67-1450 | 1 | Spring-Idler |
| 17 | 321-6 | 1 | Screw-HH |
| 18 | 3218-1 | 1 | Nut-Jam |
| 19 | 121-9876 | 1 | Cable-Accelerator |

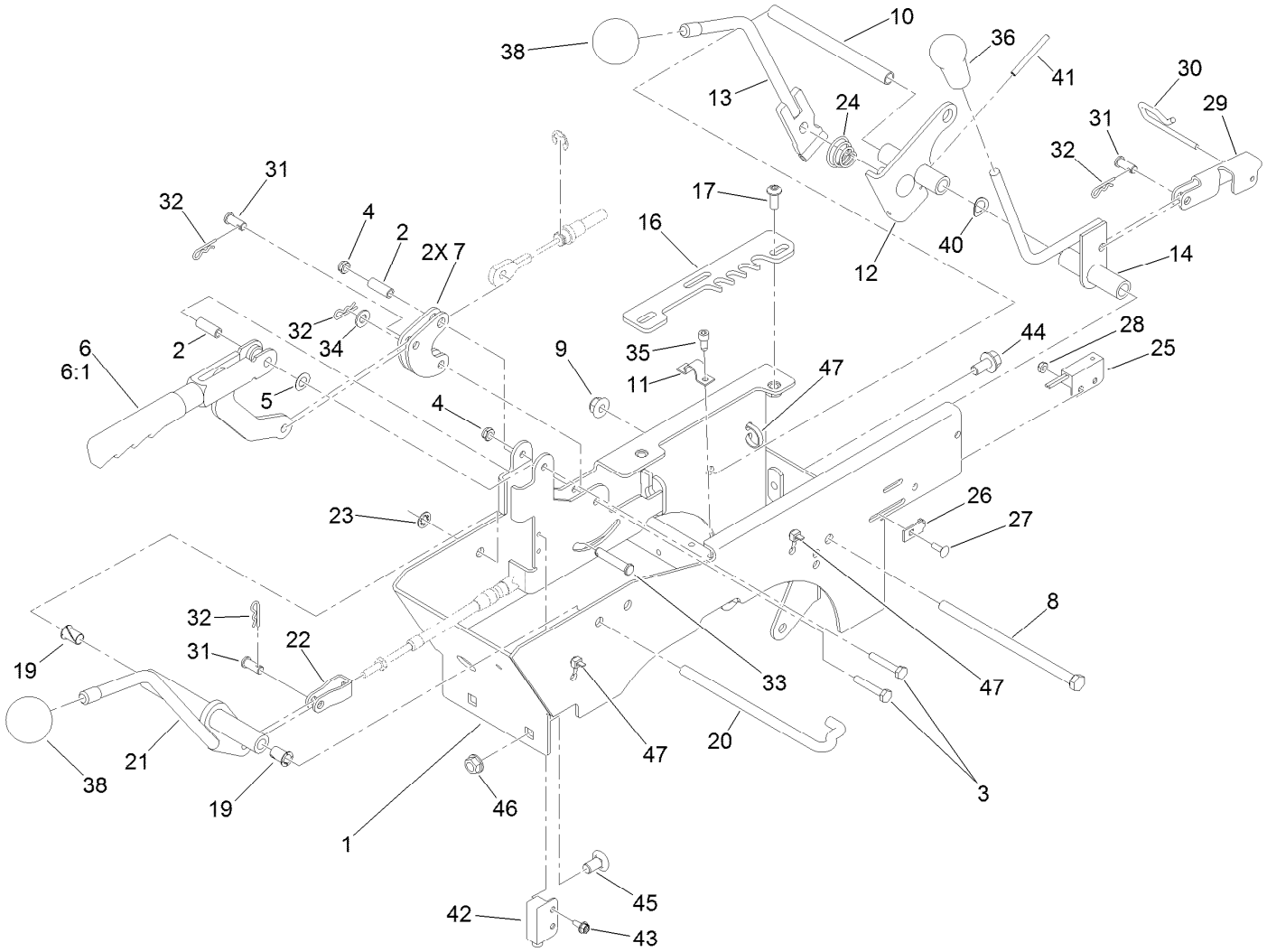


# Center Console Assembly

| Ref. | Part Number | Qty. | Description |
|---|---|---|---|
| 1 | 121-9870-03 | 1 | Support-Lever |
| 2 | 114402 | 2 | Spacer |
| 3 | 321-9 | 2 | Screw-HH |
| 4 | 3296-56 | 2 | Nut-Lock, NI |
| 5 | 3290-477 | 1 | Washer-Curved |
| 6 | 104-6842 | 1 | Lever-Brake, Park |
| 6:1 | 106-7972 | 1 | Grip-Handle |
| 7 | 127-8603 | 2 | Bellcrank-Brake, Park |
| 8 | 323-36 | 1 | Screw-HH |
| 9 | 104-8301 | 1 | Nut-HF, NI |
| 10 | 106-7833 | 1 | Spacer |
| 11 | 116-1545 | 1 | Clamp |
| 12 | 121-9872 | 1 | Lever-Pivot |
| 13 | 121-9873 | 1 | Lever-Control, Speed |
| 14 | 121-9895 | 1 | Lever-HYD |
| 16 | 121-9851 | 1 | Lever-Control, Speed (Detent) |
| 17 | 3274-55 | 2 | Screw-HSBH |
| 19 | 52-2890 | 2 | Bushing-Nylon |
| 20 | 121-9869 | 1 | Shaft-Lever, Shift |
| 21 | 121-9868 | 1 | Lever-Shift |
| 22 | 87-2310 | 1 | Clevis-Cable |
| 23 | 32151-56 | 1 | Ring-Retaining, External |
| 24 | 87-2900 | 1 | Spring-Compression |
| 25 | 100-1270 | 1 | Switch-Proximity |
| 26 | 100-4872 | 1 | Plate-Switch, Neutral |
| 27 | 3229-34 | 1 | Screw-CARR |
| 28 | 3296-12 | 1 | Nut-Lock, NI |
| 29 | 115-2250 | 1 | Link |
| 30 | 115-2350 | 1 | Pin-Retainer |
| 31 | 283-62 | 3 | Pin-Clevis |
| 32 | 3290-307 | 4 | Pin-Cotter |
| 33 | 94-3829 | 1 | Pin-Clevis |
| 34 | 3256-23 | 1 | Washer-Plain |
| 35 | 65-5220 | 2 | Screw-HSH, Thread Forming |
| 36 | 106-7903 | 1 | Knob-Control |
| 38 | 233-48 | 2 | Knob |
| 40 | 3290-221 | 1 | Washer-Spring |
| 41 | 32121-48 | 1 | Pin-Spring |
| 42 | 104-1414 | 1 | Sensor-Proximity, Ferrous (NC) |

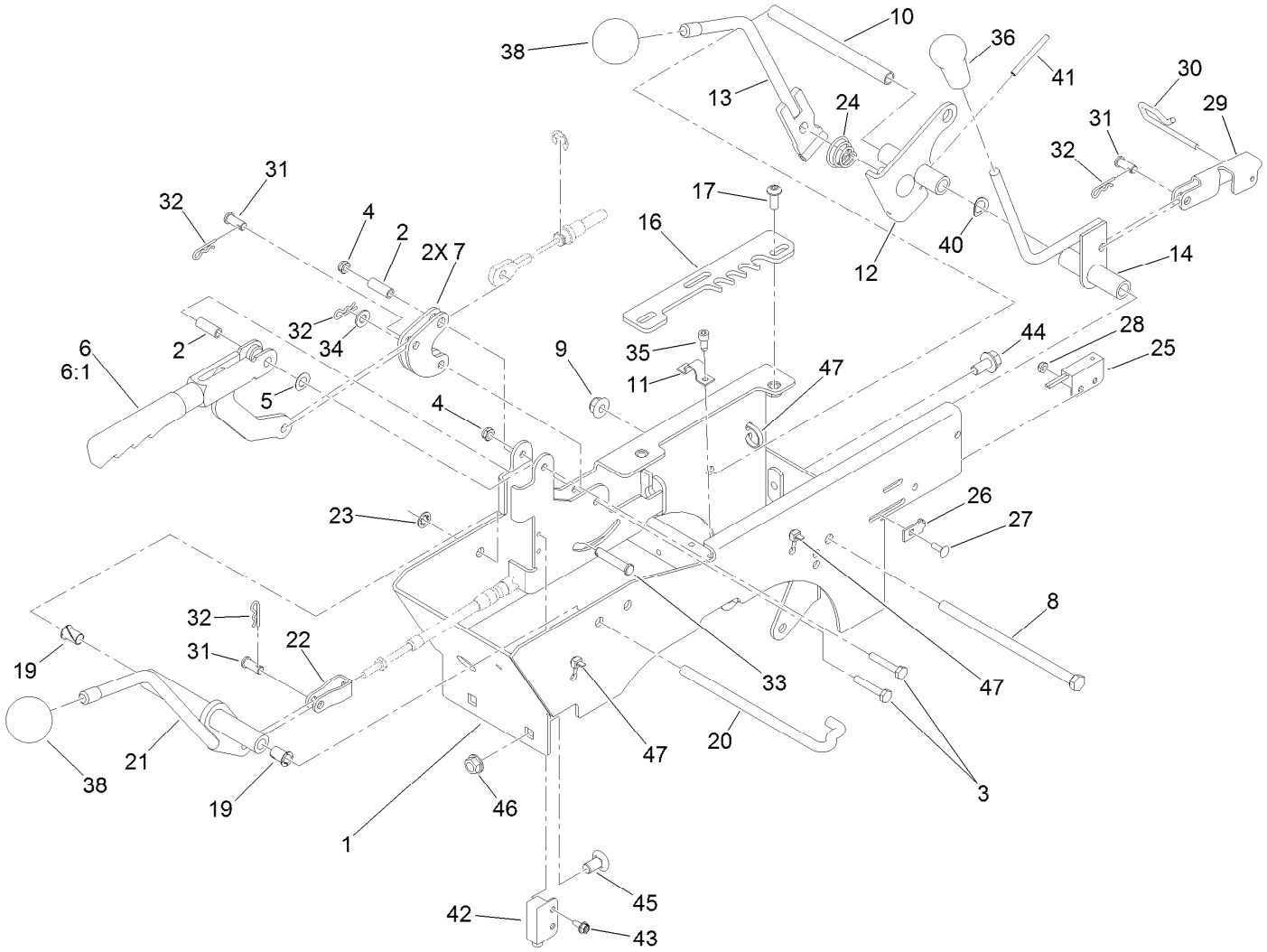


# Center Console Assembly (continued)

| Ref. | Part Number | Qty. | Description |
|---|---|---|---|
| 43 | 32104-60 | 2 | Screw-HWH |
| 44 | 3234-12 | 2 | Screw-HHF |
| 45 | 3231-21 | 2 | Screw-CARR |
| 46 | 3290-357 | 2 | Nut-HHF, Whiz |
| 47 | 3290-379 | 3 | Tie-Cable |

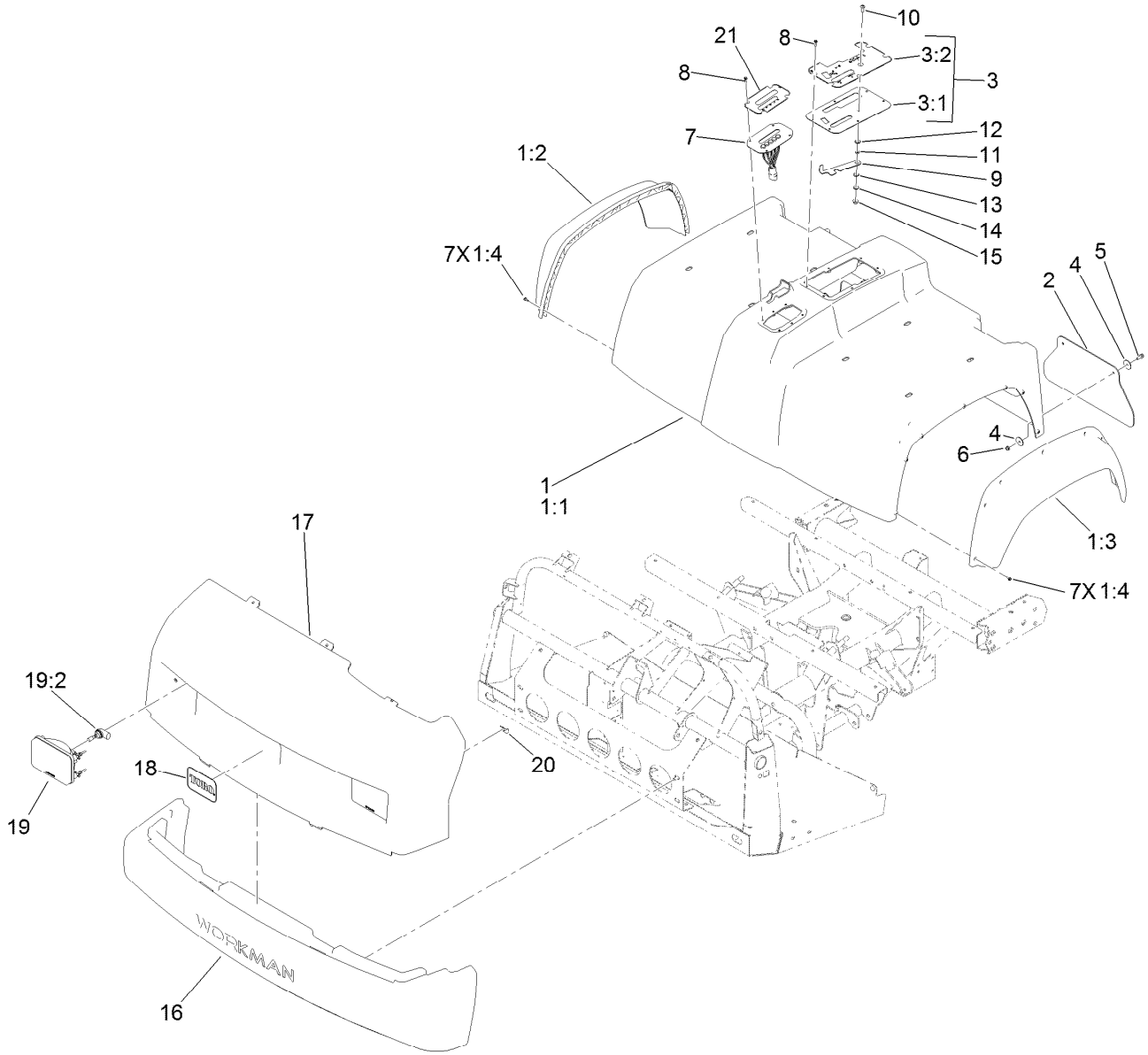


# Bumper, Hood and Seat Base Assembly

| Ref. | Part Number | Qty. | Description |
|---|---|---|---|
| 1 | 115-7815 | 1 | Seat Base ASM |
| 1:1 | | 1 | Base-Seat ● |
| 1:2 | 114-8407 | 1 | Fender-Front, RH |
| 1:3 | 114-8408 | 1 | Fender-Front, LH |
| 1:4 | 117-5036 | 14 | Screw-HWH |
| 2 | 106-2378 | 2 | Mudflap |
| 3 | | 1 | Control Plate ASM ● |
| 3:1 | 121-9737-03 | 1 | Plate-Control |
| 3:2 | 121-9890 | 1 | Decal-Console |
| 4 | 3256-55 | 8 | Washer-Flat |
| 5 | 3234-4 | 4 | Screw-HHF |
| 6 | 104-7201 | 4 | Nut-HF |
| 7 | 127-7351 | 1 | Shift Plate ASM |
| 8 | 98-1375 | 10 | Screw-HWH |

| Ref. | Part Number | Qty. | Description |
|---|---|---|---|
| 9 | 106-7984 | 1 | Lever-Detent |
| 10 | 3274-55 | 1 | Screw-HSBH |
| 11 | 82-4240 | 1 | Spacer-Bearing |
| 12 | 94-8196 | 1 | Washer-Nylon |
| 13 | 3290-221 | 1 | Washer-Spring |
| 14 | 3256-23 | 1 | Washer-Plain |
| 15 | 104-8300 | 1 | Nut-HF, NI |
| 16 | 112-3185 | 1 | Bumper |
| 17 | 112-3183 | 1 | Hood |
| 18 | 117-4950 | 1 | Decal |
| 19 | 114-8322 | 2 | Headlight ASM |
| 19:2 | 115-2395 | 1 | Bulb-Light |
| 20 | 114-8341 | 6 | Clip-Speed |
| 21 | 127-8717 | 1 | Decal-Indicator, Shift |

● Not serviced separately

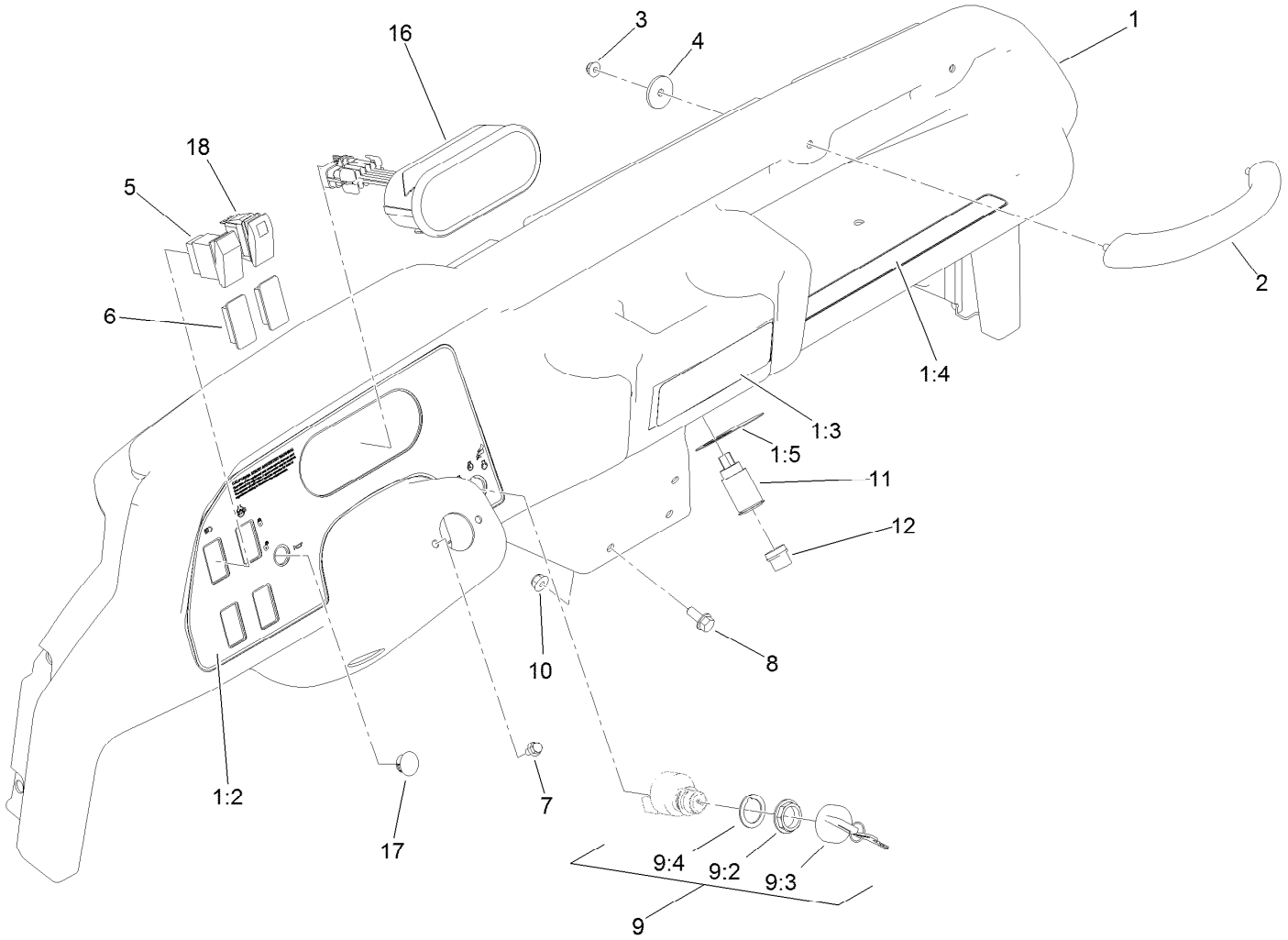


# Dash Assembly

| Ref. | Part Number | Qty. | Description |
|---|---|---|---|
| 1 | 127-8621 | 1 | Dash ASM |
| 1:2 | 127-8620 | 1 | Decal-Dash |
| 1:3 | 115-7746 | 1 | Decal-Danger |
| 1:4 | 115-2282 | 1 | Decal-Warning, Dash |
| 1:5 | 106-2353 | 1 | Decal-Powerpoint |
| 2 | 117-4948 | 1 | Handle-Grab |
| 3 | 104-7201 | 2 | Nut-HF |
| 4 | 103995 | 2 | Washer |
| 5 | 95-8999 | 1 | Switch |
| 6 | 99-7420 | 2 | Plug-Hole |
| 7 | 33103-012 | 2 | Screw-HHF |

| Ref. | Part Number | Qty. | Description |
|---|---|---|---|
| 8 | 3234-5 | 3 | Screw-HHF |
| 9 | 106-5269 | 1 | Ignition Switch ASM |
| 9:2 | 108-8660 | 1 | Nut-Mounting |
| 9:3 | 106-5270 | 1 | Ignition Key Set |
| 9:4 | 108-8659 | 1 | Washer-Backup |
| 10 | 104-8300 | 3 | Nut-HF, NI |
| 11 | 99-7411 | 1 | Point-Power |
| 12 | 99-7416 | 1 | Cap |
| 16 | 121-9849 | 1 | Cluster-Instrument (Auto) |
| 17 | 94-5627 | 1 | Plug |
| 18 | 105-4232 | 1 | Switch |

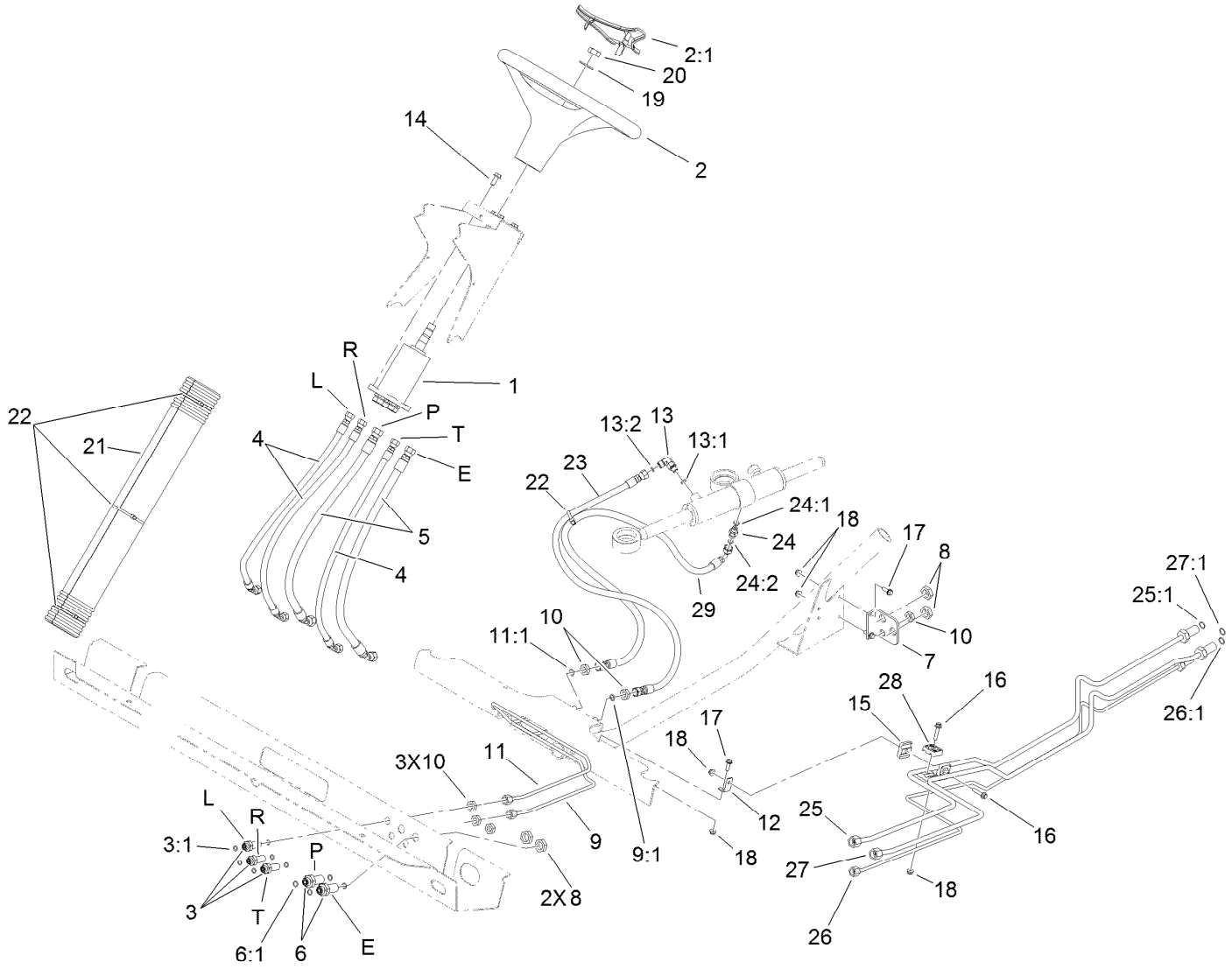


# Steering Hydraulic Assembly

| Ref. | Part Number | Qty. | Description |
|---|---|---|---|
| 1 | 120-4813 | 1 | Pump-Steering |
| 2 | 98-1471 | 1 | Wheel-Steering |
| 2:1 | 98-1468 | 1 | Cover-Wheel, Steering |
| 3 | 94-1444 | 3 | Union-Bulkhead |
| 3:1 | 237-21 | 2 | O-Ring |
| 4 | 106-7974 | 3 | Hose-HYD |
| 5 | 106-7975 | 2 | Hose-HYD |
| 6 | 340-71 | 2 | Fitting-Straight, Bulkhead |
| 6:1 | 237-22 | 2 | O-Ring |
| 7 | 106-7801-03 | 1 | Bracket-Line, Steering |
| 8 | 340-70 | 4 | Nut-Lock |
| 9 | 106-7804 | 1 | Tube-HYD |
| 9:1 | 237-21 | 1 | O-Ring |
| 10 | 3219-10 | 6 | Nut-Hex |
| 11 | 106-7806 | 1 | Tube-HYD |
| 11:1 | 237-21 | 1 | O-Ring |
| 12 | 106-7807 | 1 | Bracket-Line, Steering |
| 13 | 340-132 | 1 | Fitting-Elbow, 90 |
| 13:1 | 237-78 | 1 | O-Ring |
| 13:2 | 237-21 | 1 | O-Ring |
| 14 | 98-7977 | 4 | Screw-HHF |

| Ref. | Part Number | Qty. | Description |
|---|---|---|---|
| 15 | 106-7839 | 2 | Clamp-Tube |
| 16 | 3234-21 | 2 | Screw-HHF |
| 17 | 3234-4 | 3 | Screw-HHF |
| 18 | 104-7201 | 5 | Nut-HF |
| 19 | 3256-27 | 1 | Washer-Flat |
| 20 | 3296-33 | 1 | Nut-Lock, NI |
| 21 | 106-6713 | 1 | Cover-Lines, Steering |
| 22 | 3290-379 | 4 | Tie-Cable |
| 23 | 108-6505 | 1 | Hose-HYD |
| 24 | 340-92 | 1 | Fitting-Straight |
| 24:1 | 237-78 | 1 | O-Ring |
| 24:2 | 237-21 | 1 | O-Ring |
| 25 | 115-7701 | 1 | Tube-HYD |
| 25:1 | 237-22 | 1 | O-Ring |
| 26 | 115-7702 | 1 | Tube-HYD |
| 26:1 | 237-22 | 1 | O-Ring |
| 27 | 115-7703 | 1 | Tube-HYD |
| 27:1 | 237-21 | 1 | O-Ring |
| 28 | 56-7973 | 2 | Clamp-Tube |
| 29 | 117-4861 | 1 | Hose-HYD |

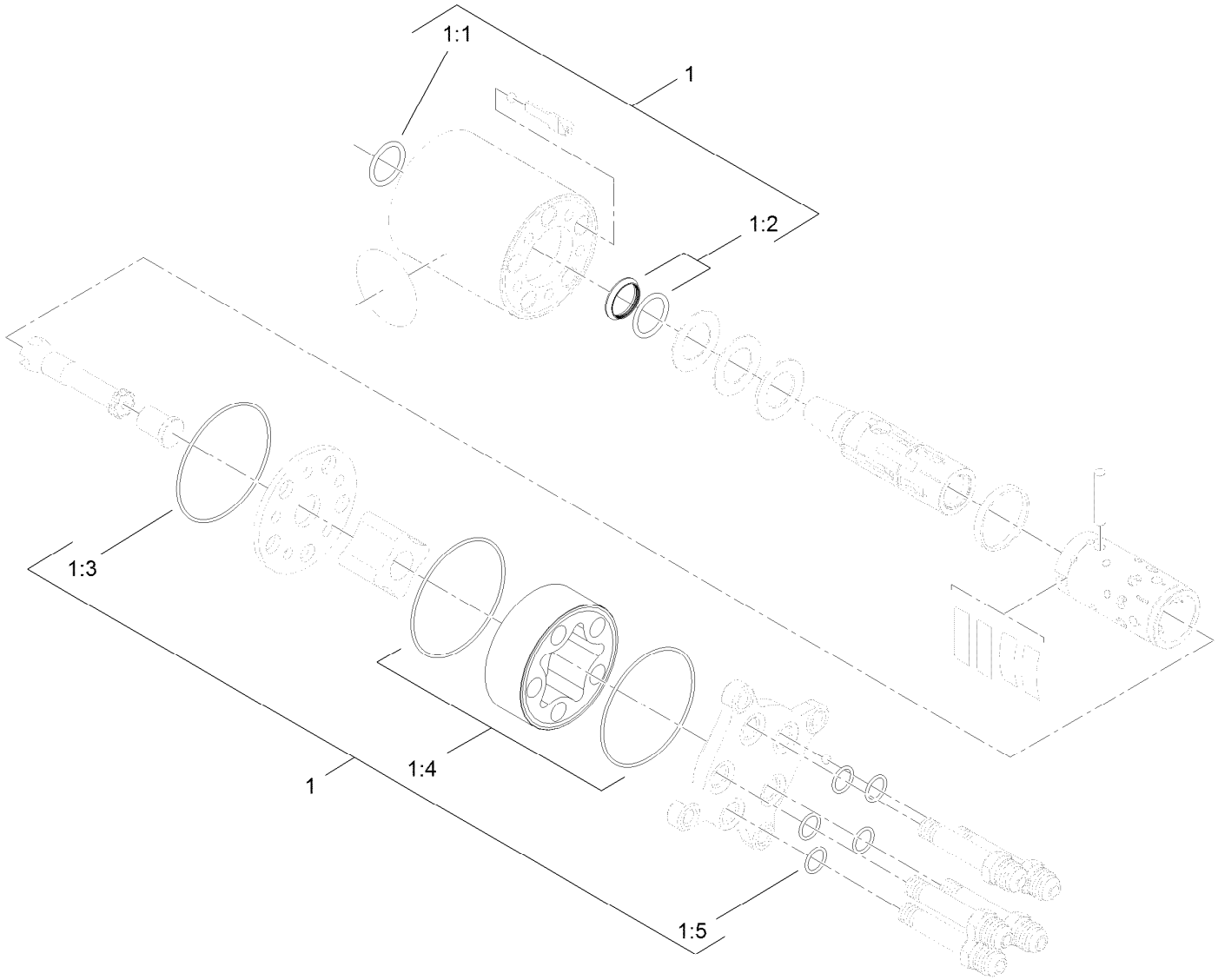


# Steering Valve Assembly No. 120-4813

| *Ref.* | *Part Number* | *Qty.* | *Description* |
|---|---|---|---|
| 1 | 106-6716 | 1 | Seal Kit |
| 1:1 | | 1 | Ring-Seal, Dust ● |
| 1:2 | | 1 | Seal-Shaft ● |
| 1:3 | | 1 | O-Ring ● |
| 1:4 | | 2 | O-Ring ● |
| 1:5 | | 5 | O-Ring ● |

● Not serviced separately

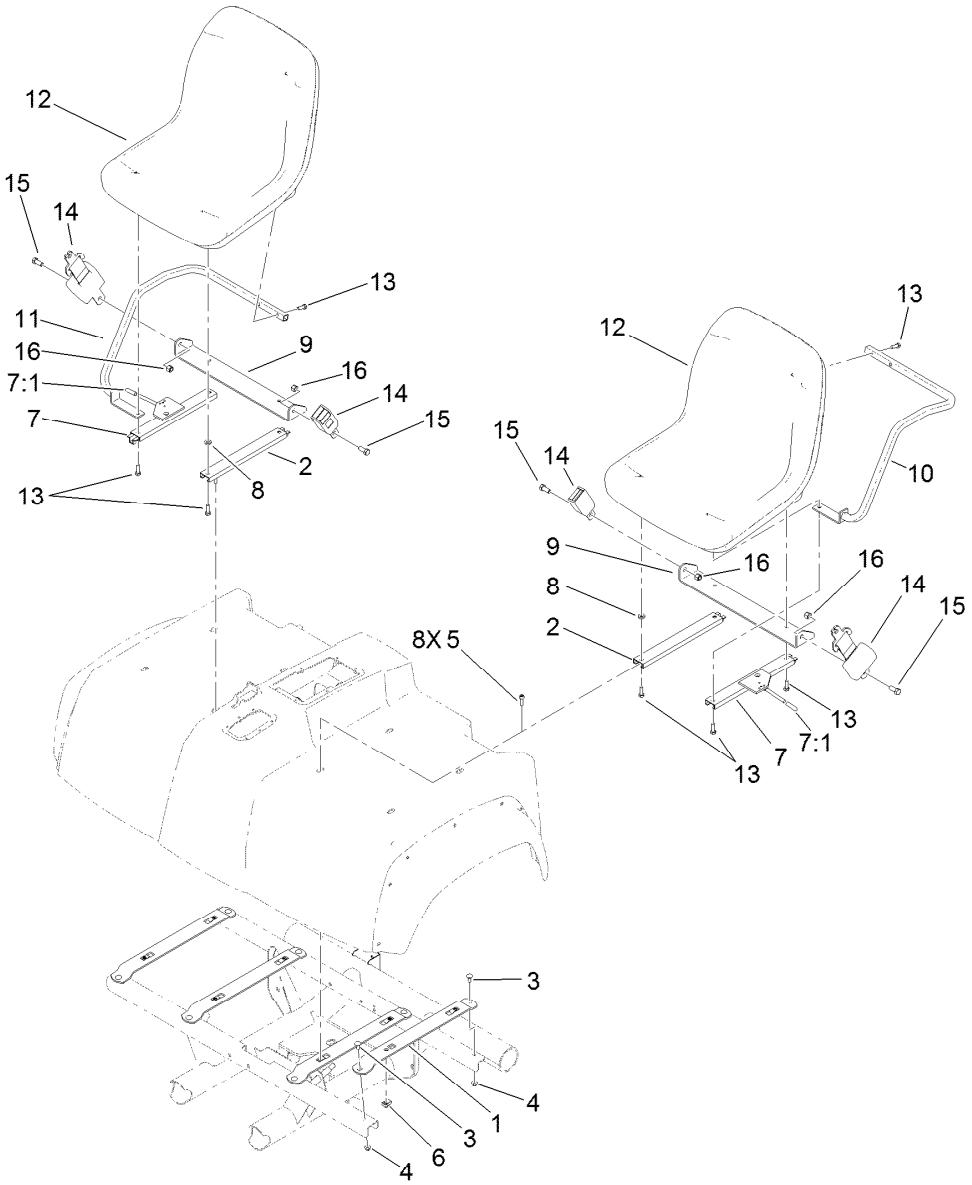


# Seat Assembly

| Ref. | Part Number | Qty. | Description |
|---|---|---|---|
| 1 | 115-2435-03 | 4 | Bracket-Seat |
| 2 | 119-0655 | 2 | Adjuster-Seat, Non Locking |
| 3 | 3230-1 | 8 | Bolt-CARR |
| 4 | 104-8300 | 8 | Nut-HF, NI |
| 5 | 3274-22 | 8 | Screw-HSH |
| 6 | 115-7721 | 8 | Nut-Clip, U |
| 7 | 121-9763 | 2 | Adjuster-Seat, Locking |
| 7:1 | 2410-49 | 1 | Cap-Vinyl |
| 8 | 104-7658 | 2 | Spacer |

| Ref. | Part Number | Qty. | Description |
|---|---|---|---|
| 9 | 119-0727-03 | 2 | Bracket-Belt, Seat |
| 10 | 119-0731-03 | 1 | Armrest-LH |
| 11 | 119-0732-03 | 1 | Armrest-RH |
| 12 | 112-2923 | 2 | Seat ASM |
| 13 | 33114-030 | 12 | Screw-HH |
| 14 | 110-0413 | 2 | Seatbelt-Retractable |
| 15 | 3212-4 | 4 | Screw-HH |
| 16 | 3296-7 | 4 | Nut-Lock |

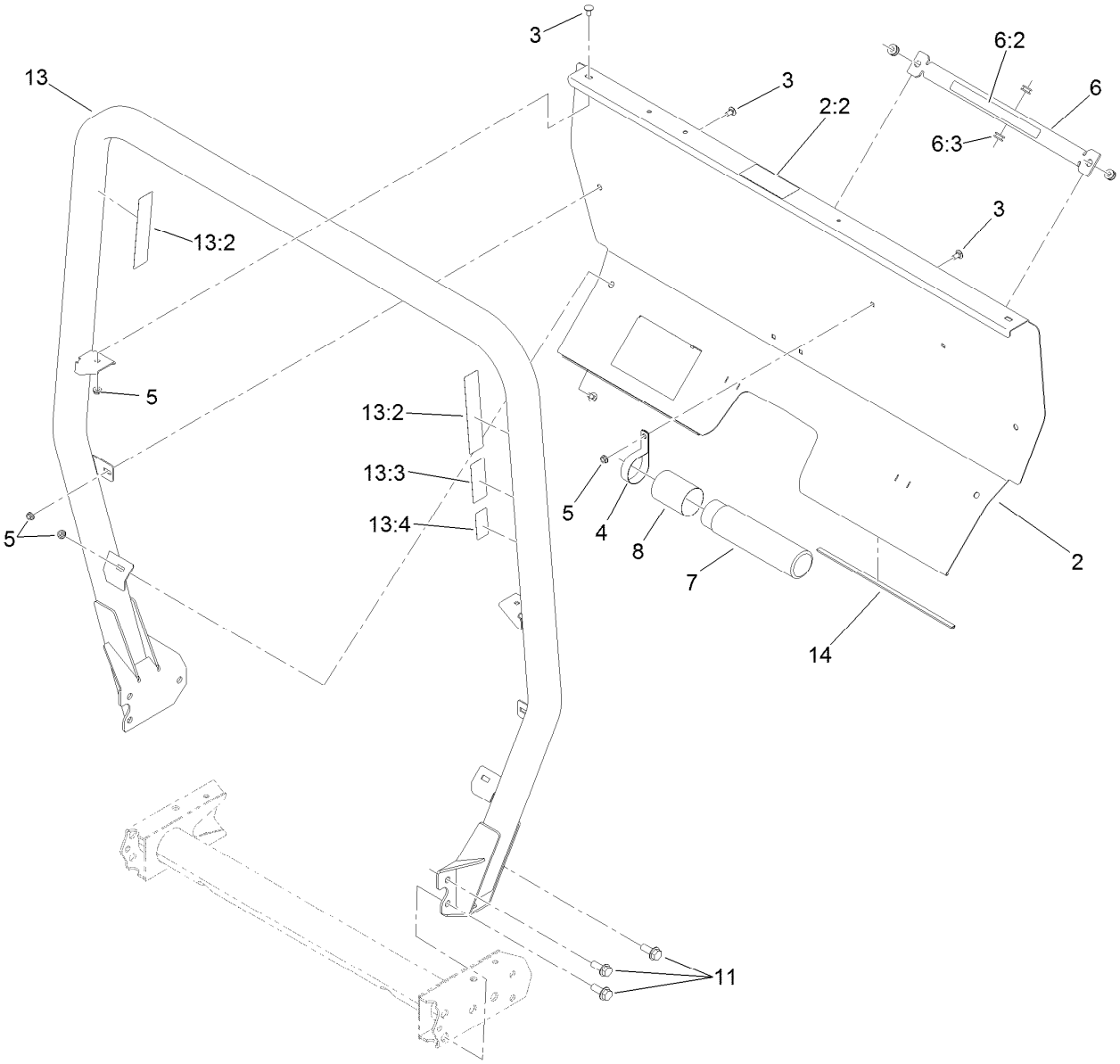


# Roll-Over Protection System Assembly

| Ref. | Part Number | Qty. | Description |
|---|---|---|---|
| 2 | 121-9857 | 1 | ROPS Cover ASM (W/Decal) |
| 2:2 | 105-4215 | 1 | Decal-Caution |
| 3 | 3230-18 | 8 | Screw-CARR |
| 4 | 2412-133 | 2 | Clamp-R |
| 5 | 32128-20 | 8 | Nut-HF |
| 6 | 105-7960 | 1 | Bed Support ASM |
| 6:2 | 93-9852 | 1 | Decal-Warning |
| 6:3 | 92-5972 | 4 | Grommet-Rubber |

| Ref. | Part Number | Qty. | Description |
|---|---|---|---|
| 7 | 104-7050 | 1 | Tube-Manual |
| 8 | 104-7048 | 1 | Cap-Housing |
| 11 | 3234-38 | 6 | Screw-HHF |
| 13 | 115-7910 | 1 | ROPS ASM |
| 13:2 | 106-7767 | 2 | Decal-ROPS |
| 13:3 | 93-9850 | 1 | Decal-ROPS, CE |
| 13:4 | 117-4969 | 1 | Decal-ROPS, ISO |
| 14 | 127-7382 | 2 | Seal-ROPS |

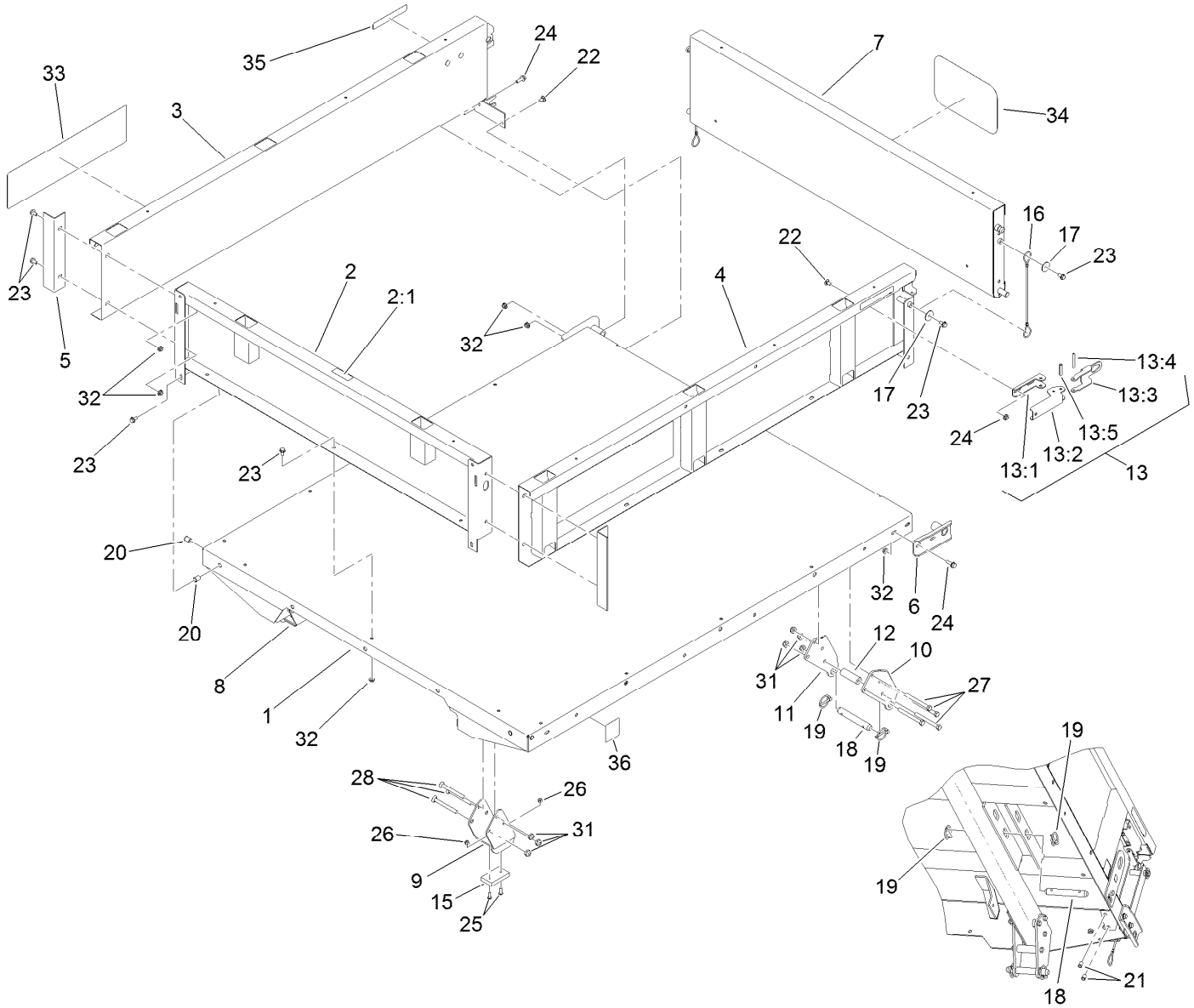


# Full Bed and Side Panel Assembly

| Ref. | Part Number | Qty. | Description |
|---|---|---|---|
| 1 | 93-9724-03 | 1 | Flatbed-Full |
| 2 | 92-5982 | 1 | Front Panel ASM |
| 2:1 | 115-7739 | 1 | Decal-No Riders |
| 3 | 92-1255-03 | 1 | Panel-Side, RH |
| 4 | 92-1248-03 | 1 | Panel-Side, LH |
| 5 | 92-1320-03 | 2 | Angle-Side |
| 6 | 92-1265-03 | 2 | Bracket-Pivot |
| 7 | 92-1259-03 | 1 | Tailgate-Rear |
| 8 | 106-2423-03 | 1 | Bracket-Spacer, RH |
| 9 | 106-2422-03 | 1 | Bracket-Spacer, LH |
| 10 | 93-9720-03 | 2 | Bracket-Pivot, Long (LH) |
| 11 | 93-9721-03 | 2 | Bracket-Pivot, Long (RH) |
| 12 | 93-9575 | 2 | Tube-Pivot, Flatbed |
| 13 | 99-1123 | 2 | Latch ASM |
| 13:1 | 92-1271 | 1 | Pivot-Latch |
| 13:2 | 99-1113 | 1 | Handle-Latch |
| 13:3 | 99-1112 | 1 | Plate-Retainer |
| 13:4 | 32121-78 | 1 | Pin-Roll |
| 13:5 | 32121-25 | 1 | Pin-Roll |
| 15 | 93-9719 | 2 | Block-Wear |

| Ref. | Part Number | Qty. | Description |
|---|---|---|---|
| 16 | 93-9595 | 2 | Lanyard |
| 17 | 3256-57 | 4 | Washer-Flat |
| 18 | 92-1233 | 4 | Pin-Clevis |
| 19 | 92-1298 | 8 | Pin-Lynch |
| 20 | 32148-7 | 4 | Nut-Insert |
| 21 | 32148-6 | 4 | Insert-Nut |
| 22 | 3230-18 | 6 | Screw-CARR |
| 23 | 3234-7 | 21 | Screw-HHF |
| 24 | 3234-29 | 6 | Screw-HHF |
| 25 | 3250-45 | 4 | Screw-SPH |
| 26 | 3296-42 | 4 | Nut-Lock, NI |
| 27 | 323-42 | 8 | Screw-HH |
| 28 | 3231-24 | 6 | Screw-CARR |
| 31 | 3296-44 | 14 | Nut-Lock, NI |
| 32 | 32128-20 | 27 | Nut-HF |
| 33 | 127-8624 | 2 | Decal-Workman, HD (Auto) |
| 34 | 105-4222 | 1 | Decal |
| 35 | 93-9868 | 2 | Decal-Caution |
| 36 | 93-9899 | 2 | Decal-Warning |

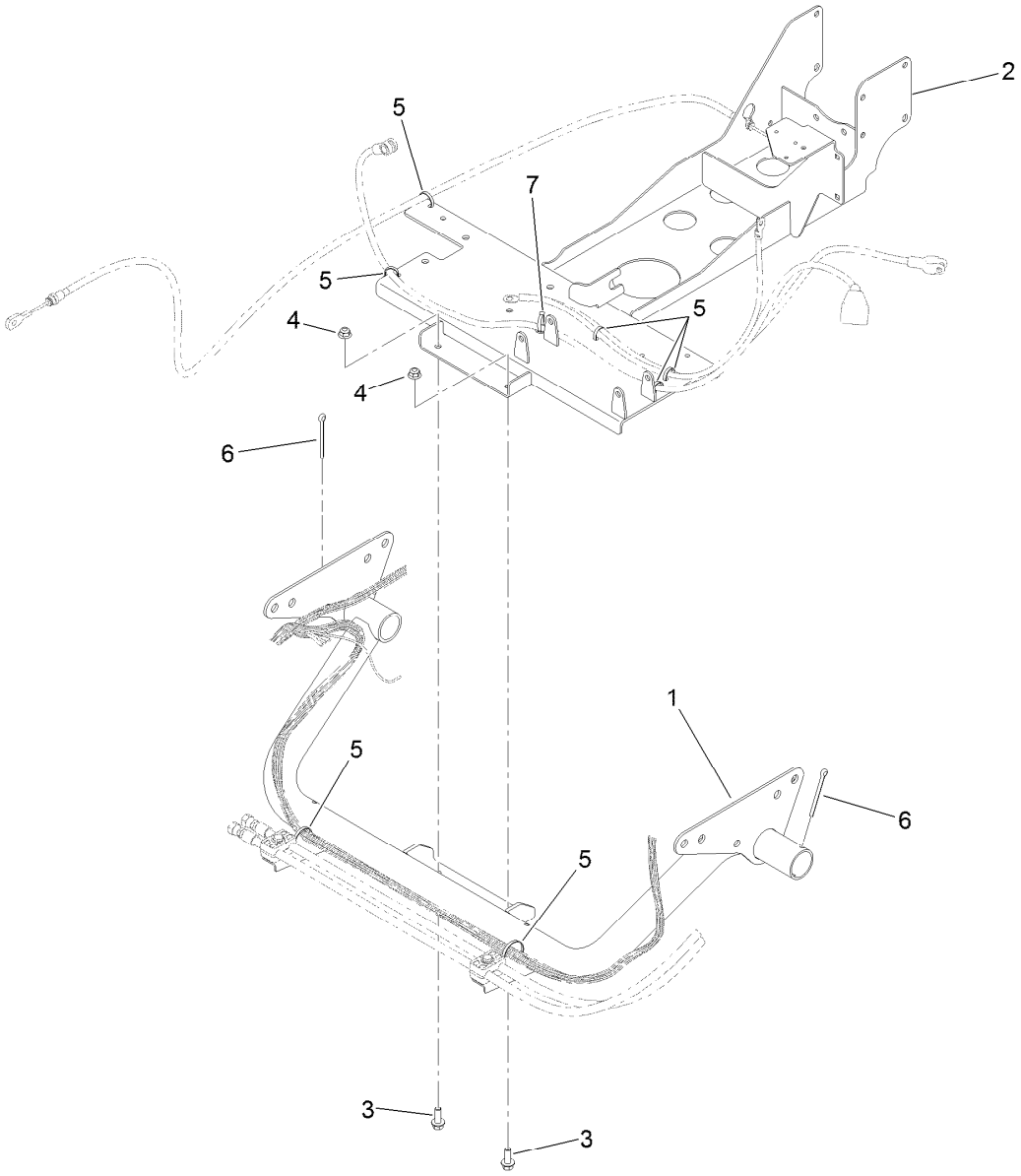


# Engine and Transmission Support Assembly

| *Ref.* | *Part Number* | *Qty.* | *Description* |
|---|---|---|---|
| 1 | 121-9750-03 | 1 | Support-Engine |
| 2 | 121-9801-03 | 1 | Mount-Engine/Transmission |
| 3 | 3234-11 | 2 | Screw-HHF |
| 4 | 104-8301 | 2 | Nut-HF, NI |
| 5 | 3290-379 | 7 | Tie-Cable |
| 6 | 3272-37 | 2 | Pin-Cotter |
| 7 | 32180-030 | 1 | Clip-Tie |

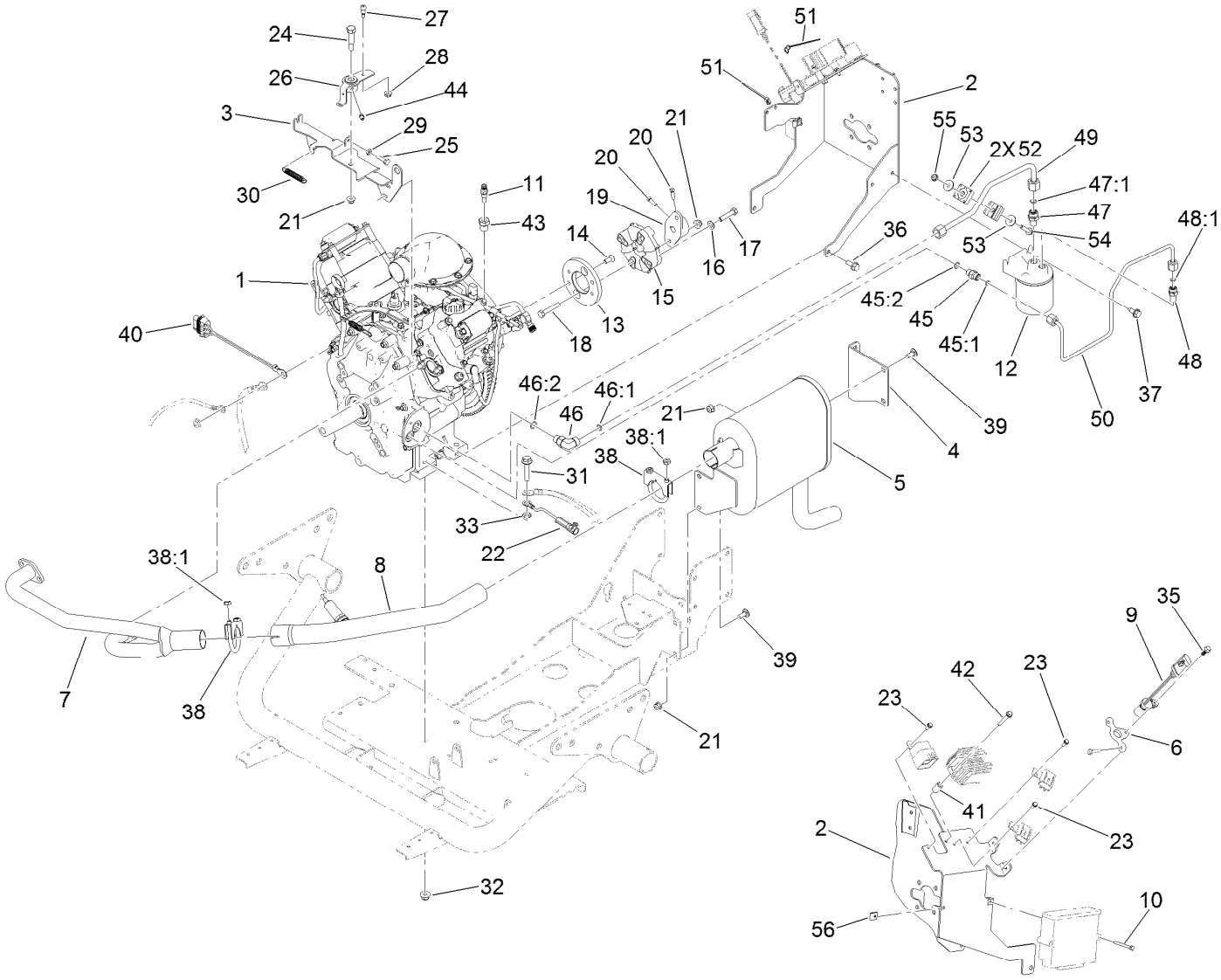


# Engine and Exhaust Assembly

| Ref. | Part Number | Qty. | Description |
|---|---|---|---|
| 1 | 121-9743 | 1 | Engine-Kohler, LH775 |
| 1:1 | 108-3847 | 1 | Filter-Oil ● |
| 2 | 127-8809-03 | 1 | Mount-Pump |
| 3 | 127-8613-03 | 1 | Bracket-Throttle |
| 4 | 121-9831-03 | 1 | Bracket-Muffler |
| 5 | 121-9830 | 1 | Muffler ASM |
| 6 | 121-9850 | 1 | Mount-Sensor, Tach |
| 7 | 121-9829 | 1 | Manifold-Exhaust |
| 8 | 121-9828 | 1 | Pipe-Exhaust, Intermediate |
| 9 | 120-4800 | 1 | Sensor-Geartooth |
| 10 | 32105-20 | 2 | Screw-HH |
| 11 | 94-7621 | 1 | Sender-Temperature |
| 12 | 127-8714 | 1 | Adapter-Filter, Remote |
| 13 | 121-9714 | 1 | Adapter-Coupler, Pump |
| 14 | 100-8159 | 2 | Screw-HSFH |
| 15 | 119-0652 | 1 | Coupler-Rubber |
| 16 | 3256-23 | 2 | Washer-Plain |
| 17 | 322-7 | 2 | Screw-HH |
| 18 | 322-21 | 2 | Screw-HH |
| 19 | 115-2169 | 1 | Hub-Pump |
| 20 | 3241-6 | 2 | Screw-SQH |
| 21 | 104-8300 | 7 | Nut-HF, NI |
| 22 | 117-5612 | 1 | Harness-Wire, Ground |
| 23 | 32144-112 | 3 | Screw-HWH |
| 24 | 7-0030 | 1 | Screw-Shoulder, HH |
| 25 | 329-6 | 1 | Screw-HH |
| 26 | 127-8617 | 1 | Bell Crank ASM |
| 27 | 119-4881 | 1 | Bolt-Shoulder |
| 28 | 32128-33 | 1 | Nut-HF |
| 29 | 3220-1 | 1 | Nut-Jam |
| 30 | 112-1542 | 1 | Spring-Extension |
| 31 | 3234-19 | 4 | Screw-HHF |
| 32 | 104-8301 | 4 | Nut-HF, NI |
| 33 | 3255-9 | 1 | Washer-Lock |
| 35 | 99-6810 | 1 | Screw-HHF |
| 36 | 33104-020 | 2 | Screw-HHF |

● Not illustrated

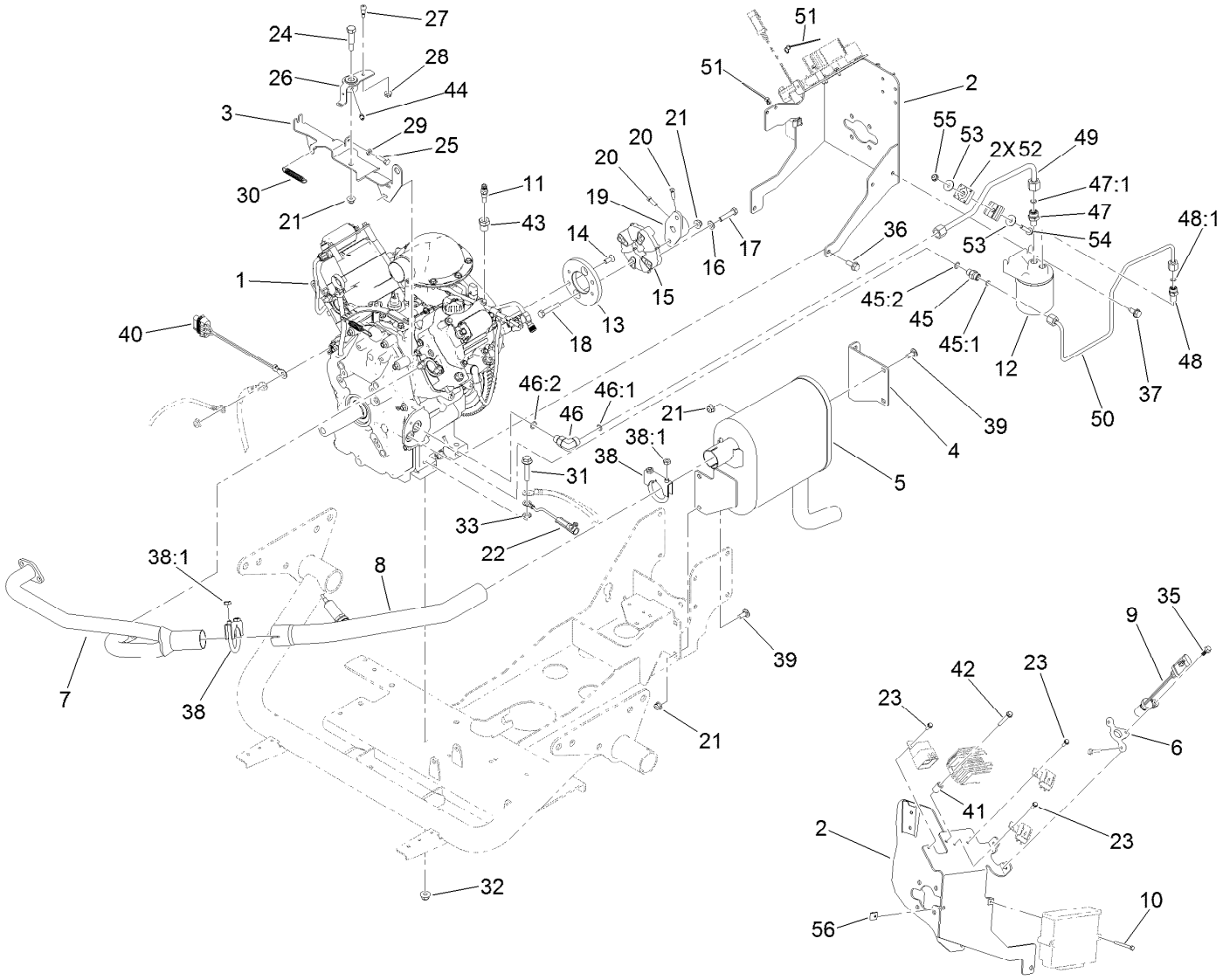


# Engine and Exhaust Assembly (continued)

| Ref. | Part Number | Qty. | Description |
|---|---|---|---|
| 37 | 32144-70 | 2 | Screw-HWHTF |
| 38 | 2112-9 | 2 | Clamp |
| 38:1 | 32128-20 | 2 | Nut-HF |
| 39 | 3230-23 | 4 | Screw-CARR |
| 40 | 99-3441 | 1 | Harness-Wire, Fusible Link |
| 41 | 120-9636 | 2 | Spacer |
| 42 | 94-2691 | 2 | Screw-HWH |
| 43 | 121-9894 | 1 | Fitting-Straight |
| 44 | 302-5 | 1 | Fitting-Grease |
| 45 | 127-8706 | 1 | Fitting-STR |
| 45:1 | 127-8710 | 1 | O-Ring |
| 45:2 | 127-8711 | 1 | O-Ring |
| 46 | 127-8709 | 1 | Fitting-90 |
| 46:1 | 127-8712 | 1 | O-Ring |

| Ref. | Part Number | Qty. | Description |
|---|---|---|---|
| 46:2 | 127-8713 | 1 | O-Ring |
| 47 | 127-8707 | 1 | Fitting-STR |
| 47:1 | 127-8712 | 1 | O-Ring |
| 48 | 127-8708 | 1 | Fitting-STR |
| 48:1 | 127-8710 | 1 | O-Ring |
| 49 | 127-8619 | 1 | Tube-HYD |
| 50 | 127-8618 | 1 | Tube-HYD |
| 51 | 3290-381 | 3 | Tie-Cable |
| 52 | 106-7839 | 2 | Clamp-Tube |
| 53 | 87-6630 | 2 | Washer-Plain |
| 54 | 3234-21 | 1 | Screw-HHF |
| 55 | 104-7201 | 1 | Nut-HF |
| 56 | 120-6686 | 2 | Nut-Clip, U |

● Not illustrated

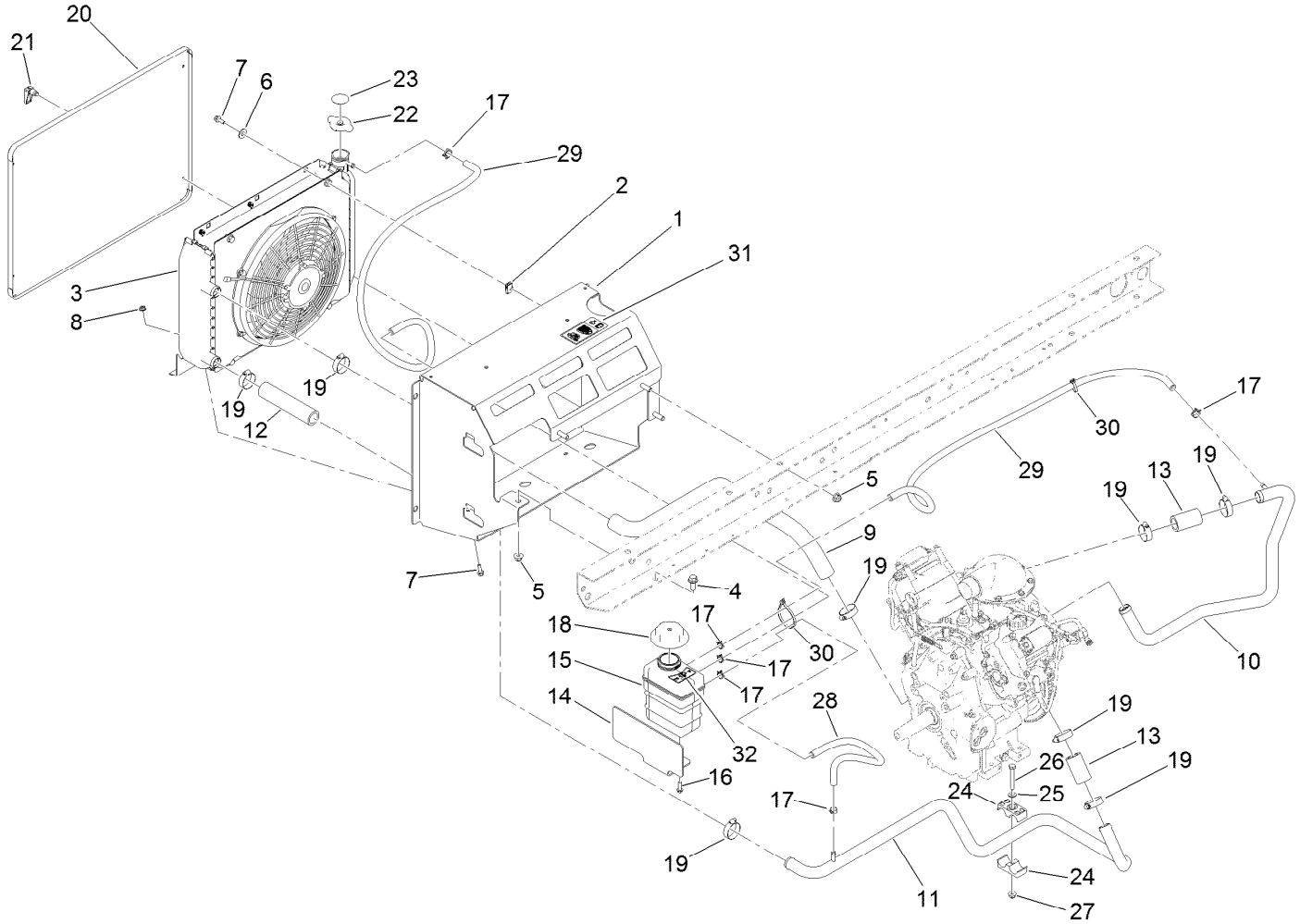


# Cooling System Assembly

| Ref. | Part Number | Qty. | Description |
|---|---|---|---|
| 1 | 115-2434 | 1 | Mount-Radiator |
| 2 | 107069 | 2 | Clip |
| 3 | | 1 | Radiator And Fan ASM ● |
| 4 | 3234-11 | 1 | Screw-HHF |
| 5 | 104-8301 | 4 | Nut-HF, NI |
| 6 | 3256-3 | 2 | Washer-Flat |
| 7 | 3234-4 | 4 | Screw-HHF |
| 8 | 32128-33 | 2 | Nut-HF |
| 9 | 121-9818 | 1 | Hose-Coolant, Upper |
| 10 | 121-9819 | 1 | Hot Coolant Pipe ASM |
| 11 | 121-9820 | 1 | Cold Coolant Pipe ASM |
| 12 | 127-8634 | 1 | Hose-Straight |
| 13 | 119-9711 | 2 | Hose-Straight |
| 14 | 121-9854-03 | 1 | Plate Mount-Tank |
| 15 | 120-4856 | 1 | Tank-Surge |
| 16 | 46-8091 | 2 | Screw-HWH |
| 17 | 92-2379 | 6 | Clamp-Hose |
| 18 | 120-4867 | 1 | Cap-Coolant, Threaded (15 PSI) |
| 19 | 2412-34 | 8 | Clamp-Hose |
| 20 | 115-2428-03 | 1 | Screen-Radiator |
| 21 | 74-5950 | 4 | Latch-Swell |
| 22 | 120-4866 | 1 | Cap-System, Cooling |
| 23 | 106-6755 | 1 | Decal-Cap, Radiator |
| 24 | 56-7974 | 2 | Clamp-Tube |
| 25 | 3256-23 | 1 | Washer-Plain |
| 26 | 322-11 | 1 | Screw-HH |
| 27 | 104-8300 | 1 | Nut-HF, NI |
| 28 | 127-8608 | 1 | Hose-Coolant |
| 29 | 120-5021 | 2 | Hose-Coolant |
| 30 | 3290-379 | 2 | Tie-Cable |
| 31 | 121-6286 | 1 | Decal-Fill, Radiator |
| 32 | 121-6287 | 1 | Decal-Tank, Overflow |

● Not serviced separately

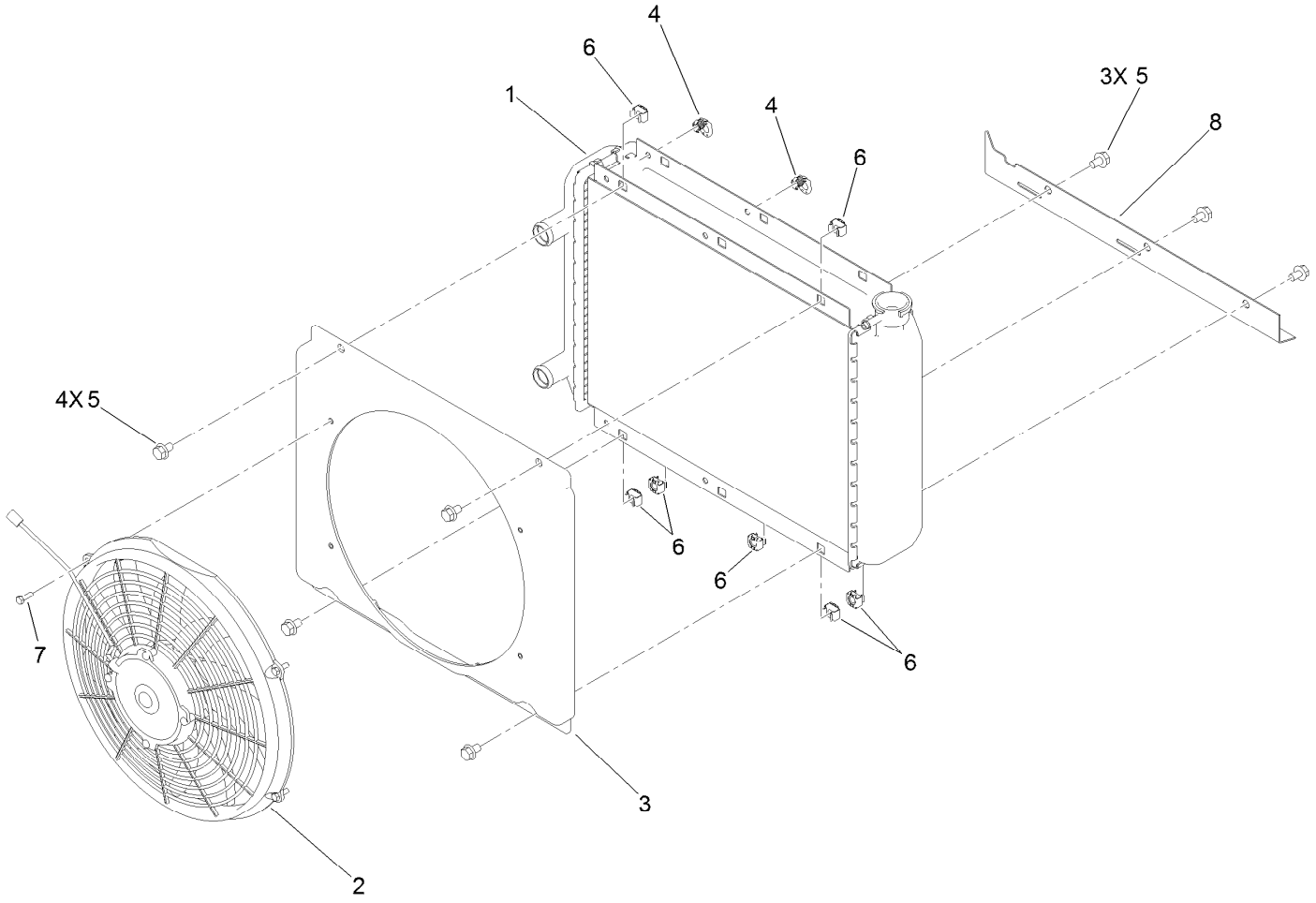


# Radiator and Fan Assembly

| *Ref.* | *Part Number* | *Qty.* | *Description* |
|---|---|---|---|
| 1 | 114-8384 | 1 | Radiator |
| 2 | 121-9812 | 1 | Fan-Electric |
| 3 | 114-8386 | 1 | Shroud |
| 4 | 114-8387 | 2 | Latch-Spring |
| 5 | 3234-30 | 7 | Screw-HHF |
| 6 | 703856 | 7 | Nut-Sq, Caged |
| 7 | 60-6910 | 4 | Screw-HH |
| 8 | 115-7765 | 1 | Plate-Mount, Lower |

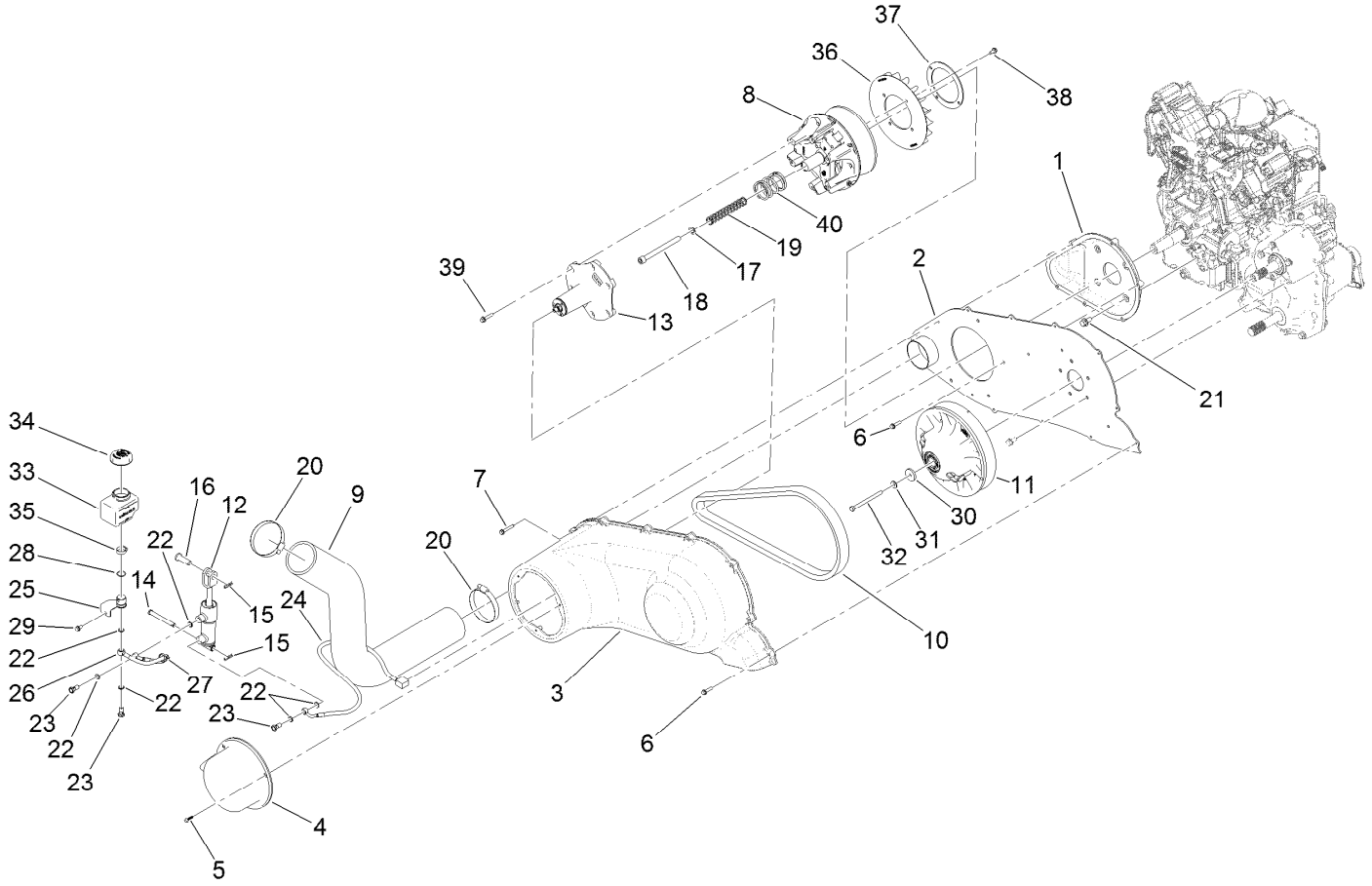


# Clutch Assembly

| Ref. | Part Number | Qty. | Description |
|---|---|---|---|
| 1 | 121-9838 | 1 | Housing-Inlet, Air |
| 2 | 121-9815-03 | 1 | Spanner Plate ASM |
| 3 | 121-9836 | 1 | Cover-Enclosure |
| 4 | 121-9837 | 1 | Cover-Limiter, Speed |
| 5 | 121-9102 | 3 | Screw-HWH |
| 6 | 32144-86 | 14 | Screw-HWHTF |
| 7 | 94-2691 | 2 | Screw-HWH |
| 8 | 121-9739 | 1 | Clutch-Primary |
| 9 | 121-9853 | 1 | Hose-Intake |
| 10 | 121-9612 | 1 | Belt |
| 11 | 121-9740 | 1 | Clutch-Secondary |
| 12 | 121-9844 | 1 | Cylinder-Master |
| 13 | | 1 | Speed Limiter Cover ASM ● |
| 14 | 80-2570 | 1 | Pin-Clevis |
| 15 | 3290-307 | 2 | Pin-Cotter |
| 16 | 117-5094 | 1 | Pin-Clevis |
| 17 | 41-8440 | 1 | Washer |
| 18 | 121-9848 | 1 | Screw-HSH |
| 19 | 121-9847 | 1 | Spring-Compression |
| 20 | 2412-125 | 2 | Clamp-Hose |
| 21 | 3234-1 | 4 | Screw-HHF |
| 22 | 115-2341 | 6 | Washer-Banjo |
| 23 | 115-2340 | 3 | Bolt-Banjo |
| 24 | 121-9846 | 1 | Speed Control Hose ASM |
| 25 | 121-9899 | 1 | Reservoir Fitting ASM |
| 26 | 121-9897 | 1 | Hose-Reservoir |
| 27 | 3290-379 | 1 | Tie-Cable |
| 28 | 237-58 | 1 | O-Ring |
| 29 | 32144-4 | 1 | Screw-HWH |
| 30 | 104-6550 | 1 | Washer-Clutch |
| 31 | 87-8640 | 1 | Washer-Flat |
| 32 | 127-8716 | 1 | Screw-HH, Lock |
| 33 | 127-8622 | 1 | Reservoir-Fluid |
| 34 | 127-8623 | 1 | Cap-Reservoir |
| 35 | 2412-141 | 1 | Clamp-Drive, Worm |
| 36 | 121-9840 | 1 | Fan |

● Not serviced separately

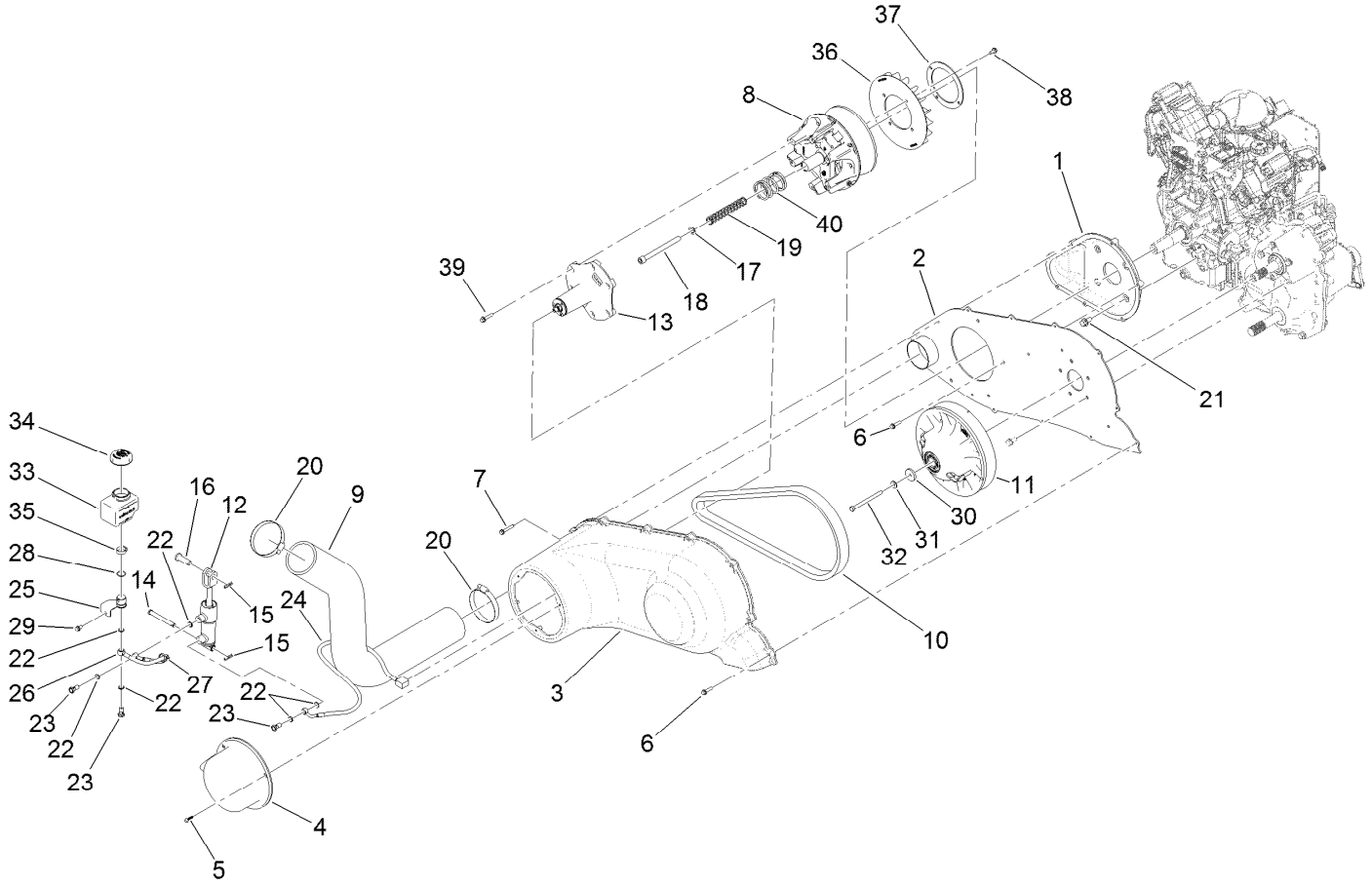


# Clutch Assembly (continued)

| Ref. | Part Number | Qty. | Description |
|---|---|---|---|
| 37 | 127-8640 | 1 | Stiffener-Fan |
| 38 | 32144-10 | 4 | Screw-HWH |
| 39 | 127-8639 | 6 | Screw-HHF |
| 40 | 127-8636 | 1 | Spring-Clutch, Primary |

● Not serviced separately

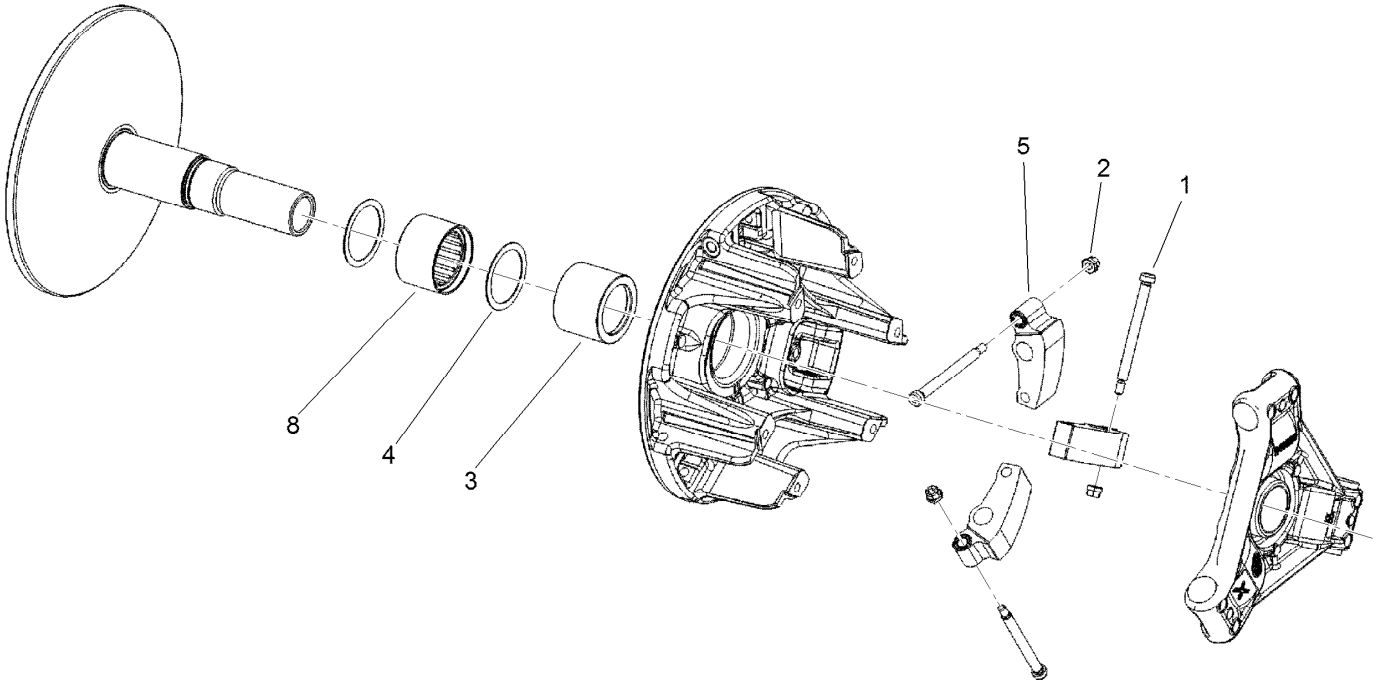


# Primary Clutch Assembly No. 121-9739

| *Ref.* | *Part Number* | *Qty.* | *Description* |
|---|---|---|---|
| 1 | 119-6016 | 3 | Screw-Shoulder |
| 2 | 119-6015 | 3 | Nut-Hex, Lock |
| 3 | 130-4068 | 1 | Cap-Sleeve, Idler |
| 4 | 130-4069 | 2 | Washer-Thrust |
| 5 | 119-6019 | 3 | Weight-Clutch |
| 8 | 130-4067 | 1 | Sleeve-Idler, Primary |

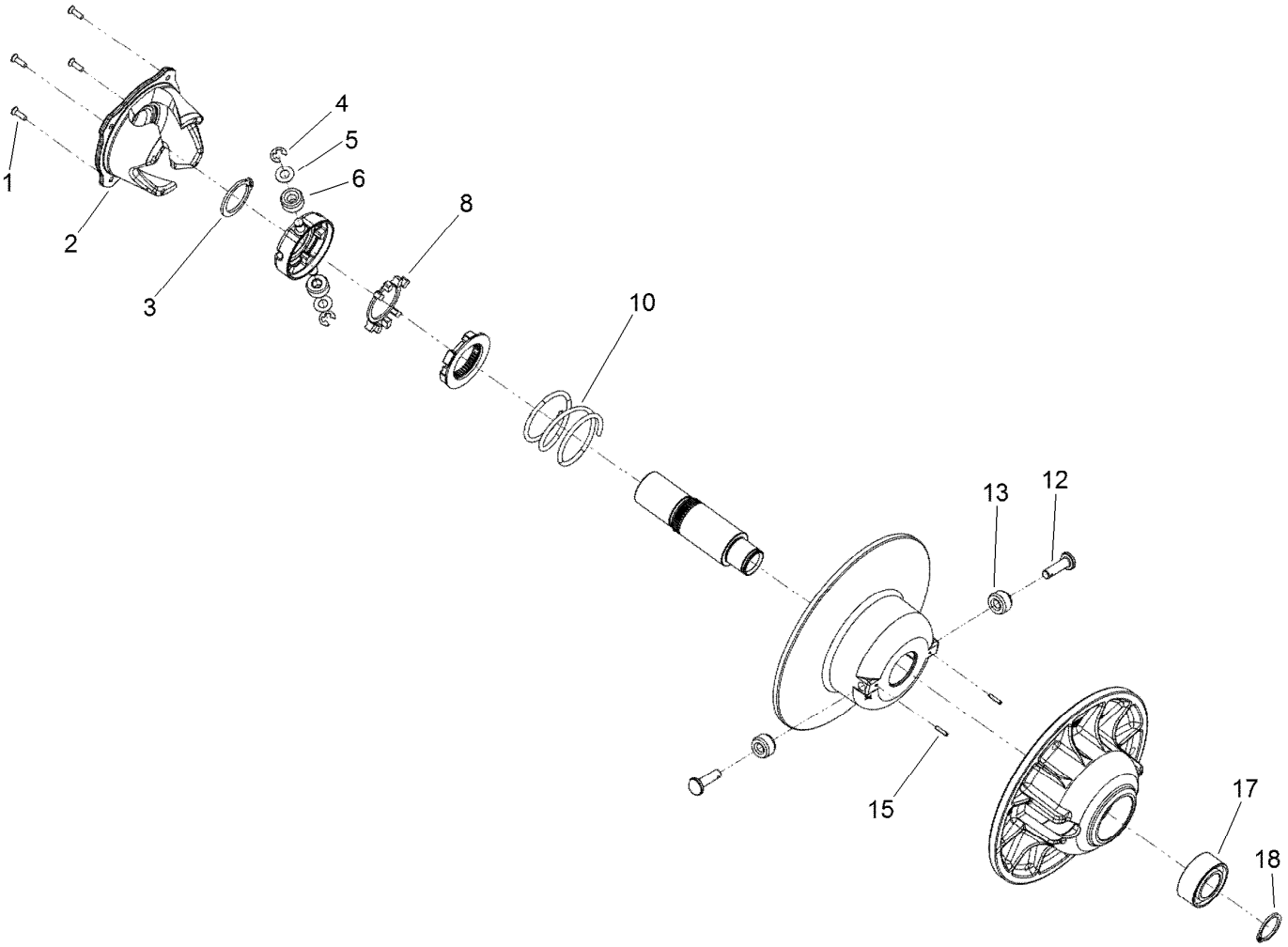


# Secondary Clutch Assembly No. 121-9740

| *Ref.* | *Part Number* | *Qty.* | *Description* |
|---|---|---|---|
| 1 | 130-4055 | 4 | Screw |
| 2 | 130-4056 | 1 | Cam Assembly |
| 3 | 130-4057 | 1 | Ring-Retaining, EXT |
| 4 | 130-4058 | 2 | E-Ring |
| 5 | 130-4059 | 2 | Washer-Thrust |
| 6 | 130-4060 | 2 | Roller-Clutch, Torlon |
| 8 | 130-4061 | 1 | Dampener-Spider |
| 10 | 130-4062 | 1 | Spring-Compression, Red |
| 12 | 130-4063 | 2 | Pin-Roller |
| 13 | 130-4064 | 2 | Roller-Clutch, Stanyl |
| 15 | 130-4065 | 2 | Pin-Spring, Slotted |
| 17 | 130-4066 | 1 | Bearing-Ball |
| 18 | 130-4612 | 1 | Ring-Retaining |

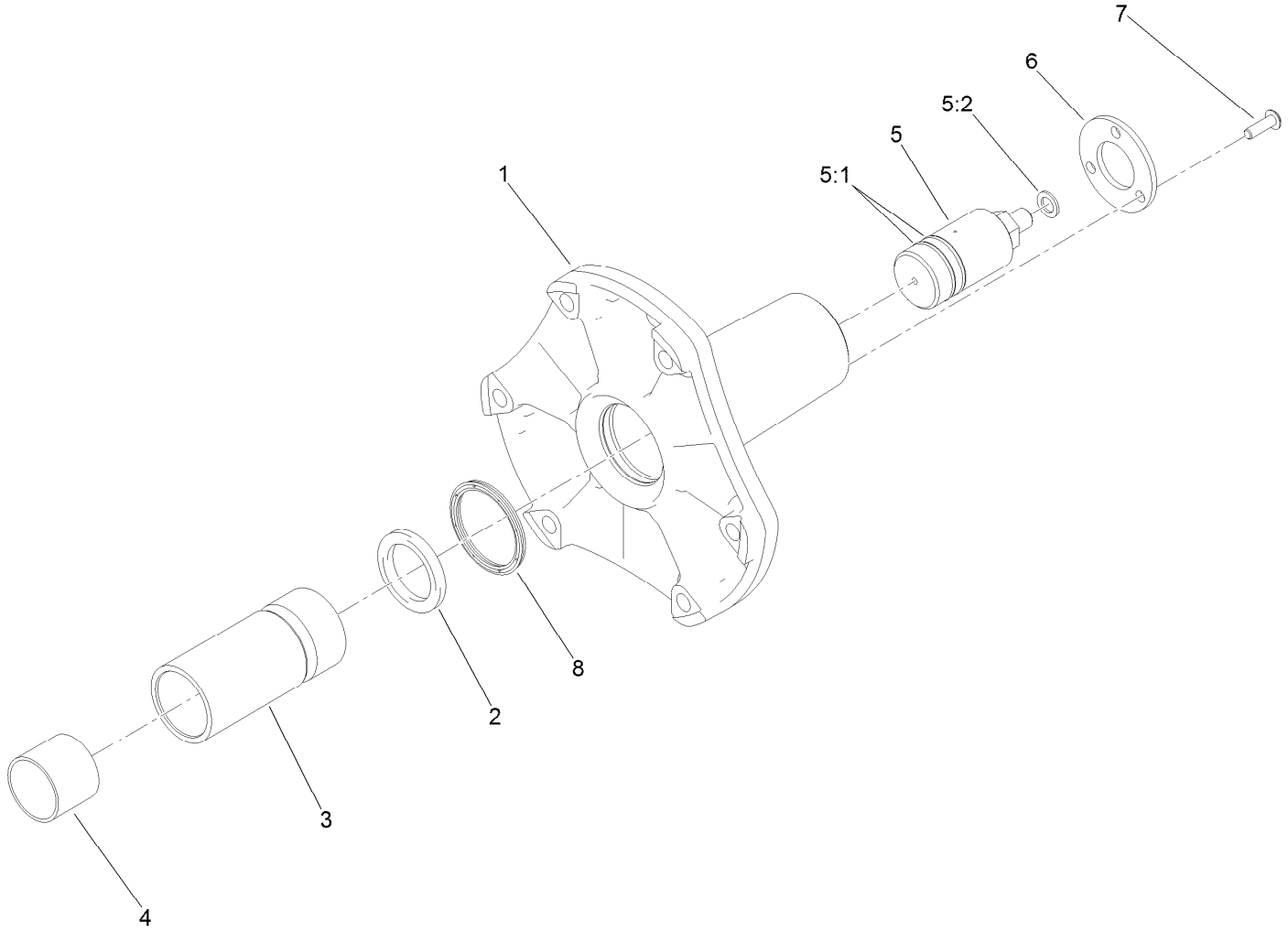


# Speed Limiter Cover Assembly

| *Ref.* | *Part Number* | *Qty.* | *Description* |
|---|---|---|---|
| 1 | 127-8743 | 1 | Cover-Control, Speed |
| 2 | 127-8748 | 1 | Ring-Quad |
| 3 | 127-8736 | 1 | Piston-HYD |
| 4 | 121-9730 | 1 | Bushing-Sleeve |
| 5 | 121-9845 | 1 | Union-Rotary |
| 5:1 | 127-8861 | 2 | O-Ring |
| 5:2 | 115-2341 | 1 | Washer-Banjo |
| 6 | 121-9731 | 1 | Retainer |
| 7 | 3274-39 | 3 | Screw-HSBH |
| 8 | 127-8747 | 1 | U-Cup |

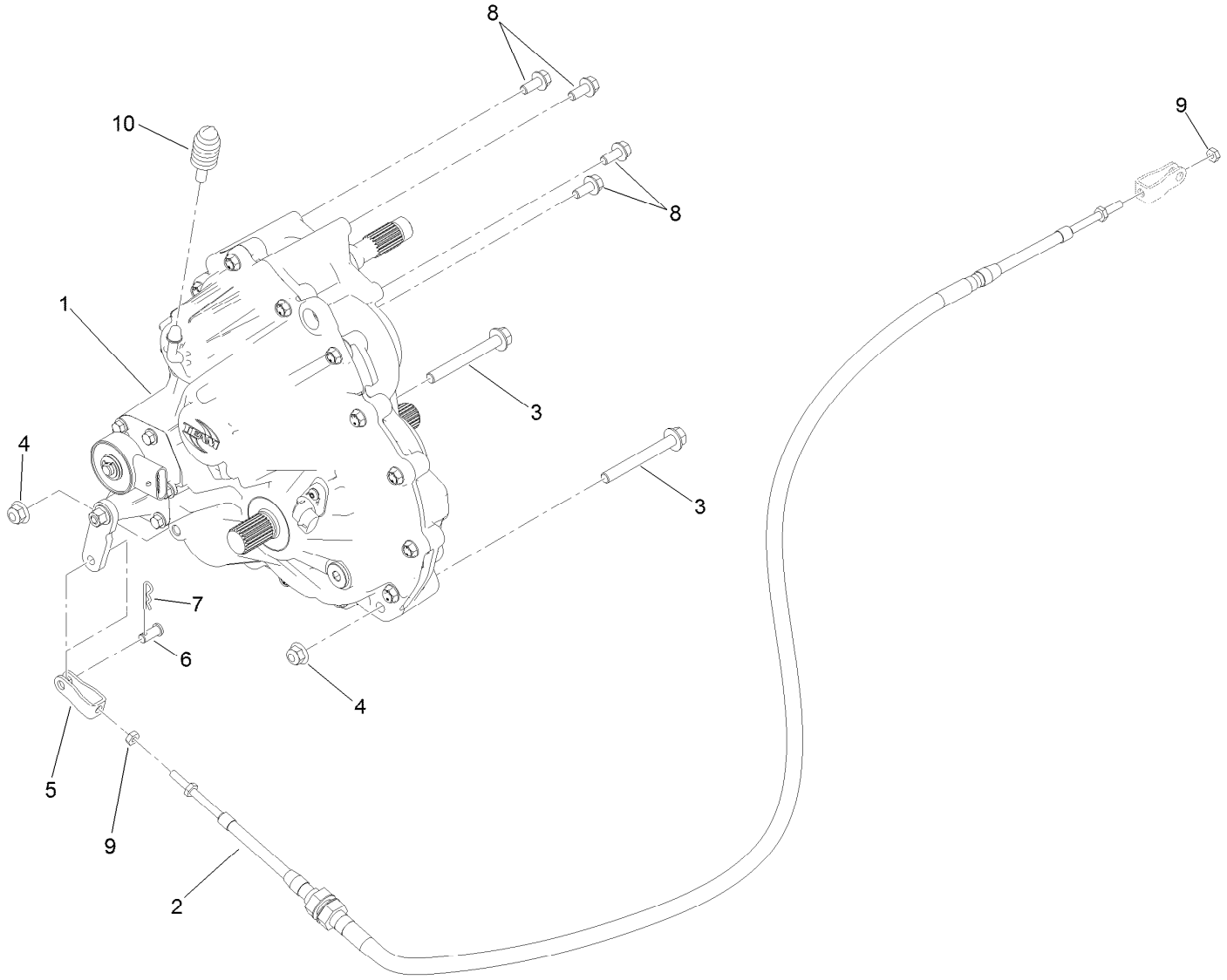


# Transmission Assembly

| *Ref.* | *Part Number* | *Qty.* | *Description* |
|---|---|---|---|
| 1 | 121-9603 | 1 | Transmission |
| 2 | 121-9843 | 1 | Cable-Shift |
| 3 | 3234-41 | 2 | Screw-HHF |
| 4 | 104-8301 | 2 | Nut-HF, NI |
| 5 | 87-2310 | 1 | Clevis-Cable |
| 6 | 283-62 | 1 | Pin-Clevis |
| 7 | 3290-307 | 1 | Pin-Cotter |
| 8 | 3234-5 | 5 | Screw-HHF |
| 9 | 3220-1 | 2 | Nut-Jam |
| 10 | 127-8859 | 1 | Bellows-Breather |

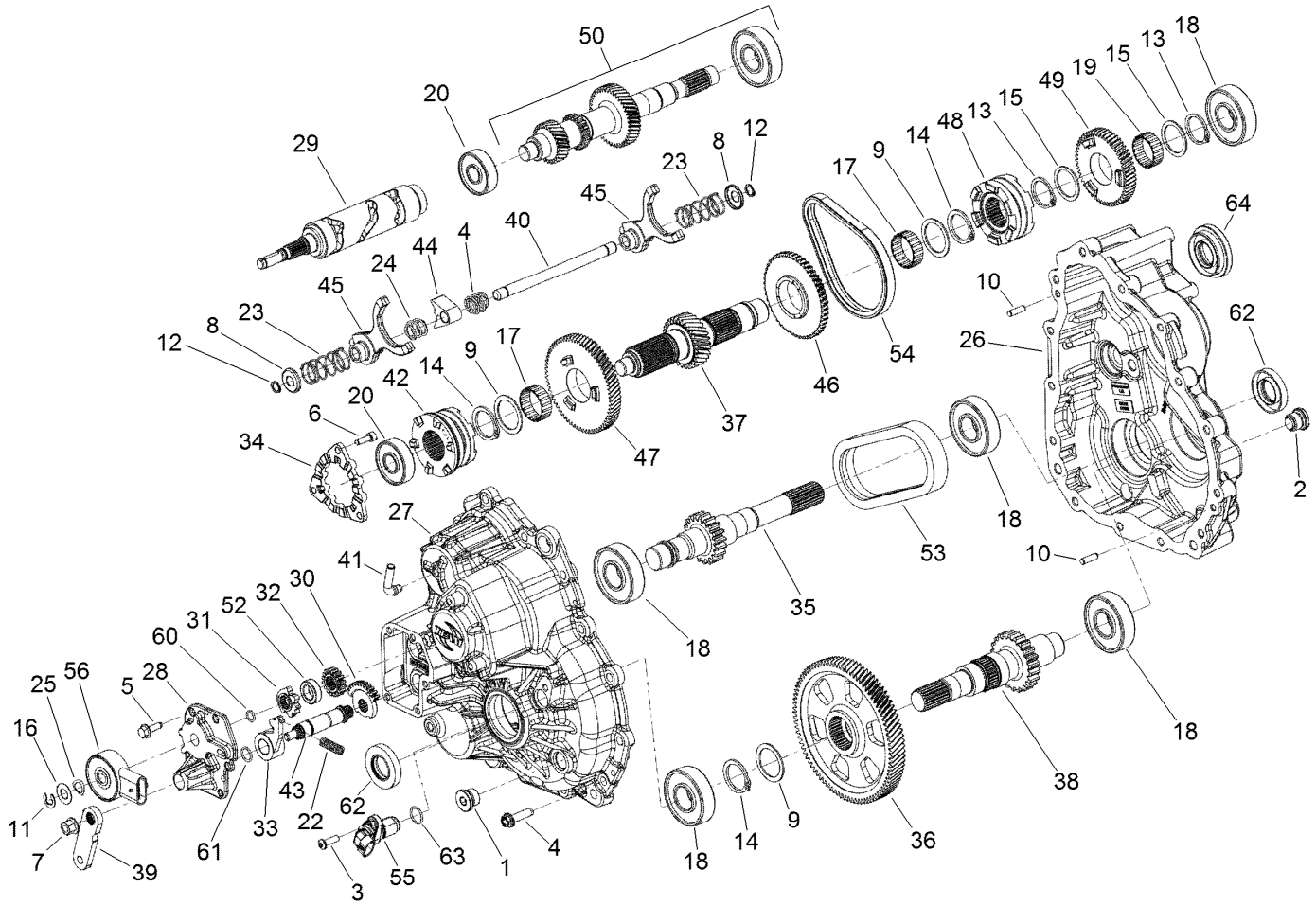


# Transmission Assembly No. 121-9603

| Ref. | Part Number | Qty. | Description |
|---|---|---|---|
| 1 | 130-4600 | 1 | Plug |
| 2 | 130-4601 | 1 | Plug-Magnetic |
| 3 | 130-4602 | 1 | Screw |
| 4 | 130-4603 | 14 | Screw |
| 5 | 130-4604 | 5 | Screw |
| 6 | 130-4605 | 3 | Screw |
| 7 | 130-4606 | 1 | Nut |
| 8 | 130-4607 | 2 | Washer-Cup |
| 9 | 130-4608 | 3 | Washer |
| 10 | 130-4609 | 2 | Pin-Dowel |
| 11 | 130-4610 | 1 | Ring-Snap |
| 12 | 130-4611 | 2 | Ring-Retaining |
| 13 | 130-4612 | 2 | Ring-Retaining |
| 14 | 130-4613 | 3 | Ring-Snap, EXT |
| 15 | 130-4614 | 2 | Washer-Thrust |
| 16 | 130-4615 | 1 | Washer-Thrust |
| 17 | 130-4616 | 2 | Bearing-Needle |
| 18 | 130-4617 | 5 | Bearing-Ball |
| 19 | 130-4618 | 1 | Bearing-Needle |
| 20 | 130-4619 | 2 | Bearing-Ball |
| 22 | 130-4623 | 1 | Spring-Compression |

| Ref. | Part Number | Qty. | Description |
|---|---|---|---|
| 23 | 130-4620 | 2 | Spring-Compression |
| 24 | 130-4621 | 2 | Spring-Compression |
| 25 | 130-4622 | 1 | Spring-Washer |
| 26 | 130-4624 | 1 | Gearcase-Front |
| 27 | 130-4625 | 1 | Gearcase-Rear |
| 28 | 130-4626 | 1 | Cover-Gear, Sector |
| 29 | 130-4627 | 1 | Drum-Shift |
| 30 | 130-4628 | 1 | Gear-Sector, 31T |
| 31 | 130-4629 | 1 | Star-Detent |
| 32 | 130-4630 | 1 | Gear-Sector, 16T |
| 33 | 130-4631 | 1 | Pawl-Detent |
| 34 | 130-4632 | 1 | Plate-Park, 12-Face |
| 35 | 130-4636 | 1 | Shaft-Output, Front (22T) |
| 36 | 130-4633 | 1 | Gear-Helical, 88T |
| 37 | 130-4634 | 1 | Shaft-Reverse, 29T |
| 38 | 130-4635 | 1 | Shaft-Output, Rear (22T) |
| 39 | 130-4637 | 1 | Bellcrank-180 Degree |
| 40 | 130-4638 | 1 | Shaft |
| 41 | 130-4639 | 1 | Tube-Vent |
| 42 | 130-4647 | 1 | Dog-Shift, Park |
| 43 | 130-4640 | 1 | Shaft-Shift |

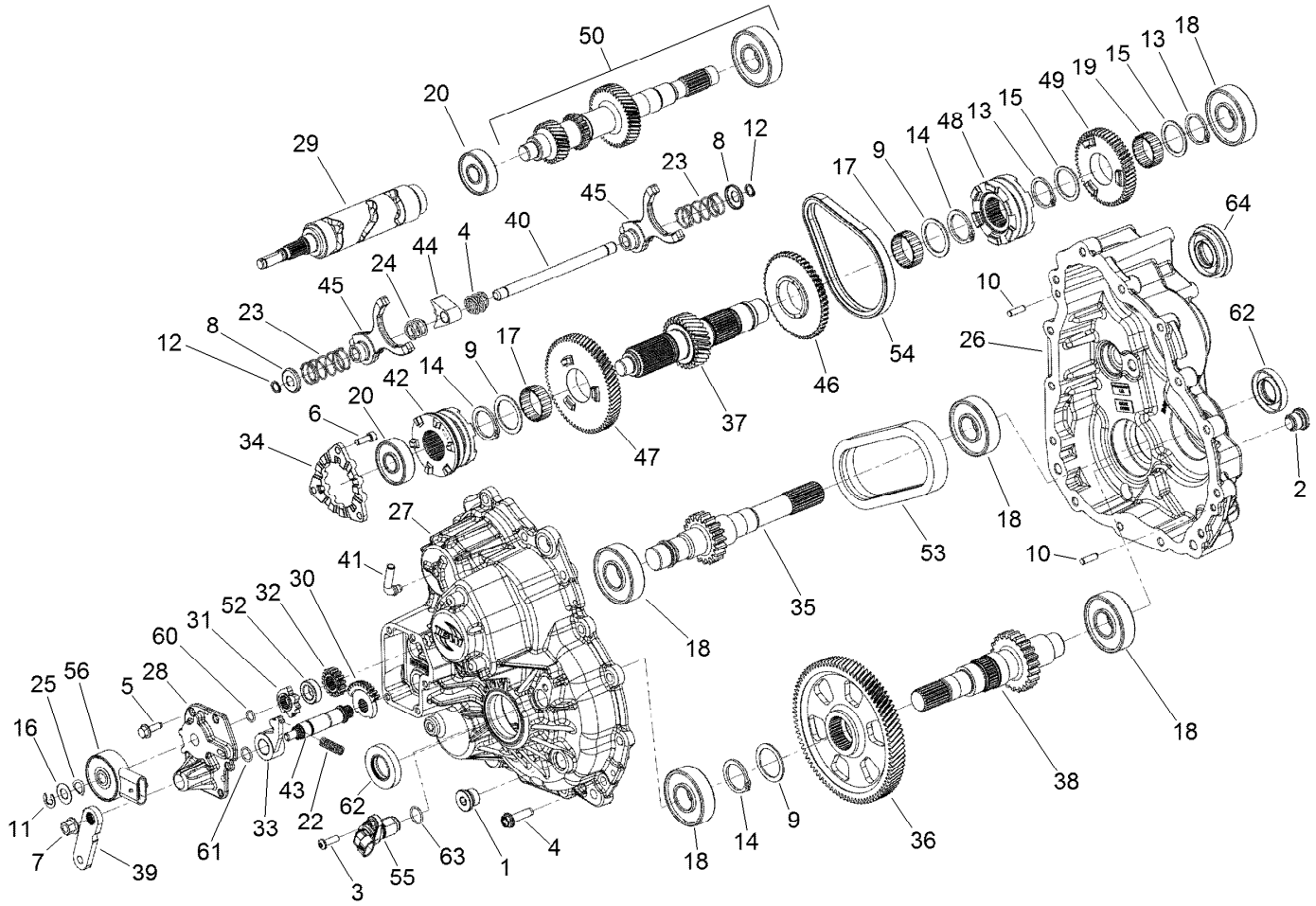


# Transmission Assembly No. 121-9603 (continued)

| Ref. | Part Number | Qty. | Description |
|---|---|---|---|
| 44 | 130-4641 | 1 | Collar-Shift |
| 45 | 130-4642 | 2 | Fork-Shift |
| 46 | 130-4643 | 1 | Sprocket-48T, 6-Face |
| 47 | 130-4644 | 1 | Gear-Low, 67T |
| 48 | 130-4646 | 1 | Dog-Engagement, 6-Face |
| 49 | 130-4645 | 1 | Gear-53T |
| 50 | 130-4648 | 1 | Subassembly-Input |
| 52 | 130-4649 | 1 | Spacer |
| 53 | 130-4650 | 1 | Chain-Silent, 11W40P |

| Ref. | Part Number | Qty. | Description |
|---|---|---|---|
| 54 | 130-4651 | 1 | Chain-Silent, Type 101 |
| 55 | 130-4652 | 1 | Sensor-Speed |
| 56 | 130-4653 | 1 | Switch-Rotary, 6-Pin |
| 60 | 130-4654 | 1 | O-Ring |
| 61 | 130-4655 | 1 | O-Ring |
| 62 | 130-4656 | 1 | Seal-Lip, Triple |
| 63 | 130-4657 | 1 | O-Ring |
| 64 | 130-4658 | 1 | Seal-Lip, Triple |

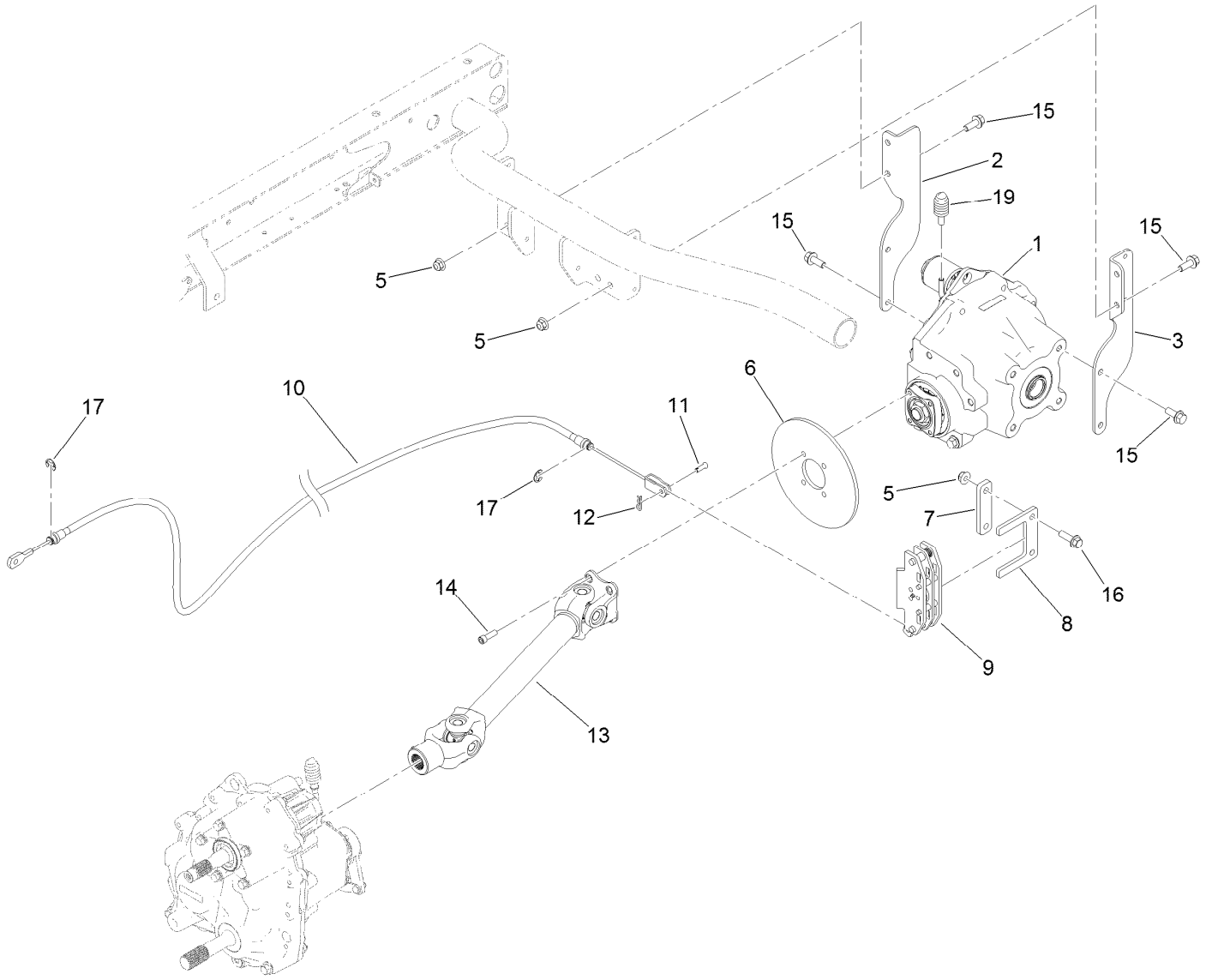


# Rear Drive Assembly

| Ref. | Part Number | Qty. | Description |
|---|---|---|---|
| 1 | 121-9604 | 1 | Differential ASM |
| 2 | 121-9616-03 | 1 | Mount-Rear, RH |
| 3 | 121-9617-03 | 1 | Mount-Rear, LH |
| 5 | 104-8301 | 6 | Nut-HF, NI |
| 6 | 121-9823 | 1 | Rotor-Brake, Park |
| 7 | 121-9841 | 1 | Spacer-Brake, Park |
| 8 | 109-0958 | 1 | Plate-Mount, Brake |
| 9 | 109-2889 | 1 | Caliper-Brake |
| 10 | 121-9842 | 1 | Cable-Brake, Park |

| Ref. | Part Number | Qty. | Description |
|---|---|---|---|
| 11 | 1-808265 | 1 | Pin-Clevis |
| 12 | 3290-307 | 1 | Pin-Cotter |
| 13 | 121-9832 | 1 | Rear Driveshaft ASM |
| 14 | 127-8633 | 4 | Screw-HSH, Lock |
| 15 | 3234-11 | 14 | Screw-HHF |
| 16 | 119-4061 | 2 | Screw-HHF |
| 17 | 32120-47 | 2 | Ring-Retaining, External |
| 19 | 127-8859 | 1 | Bellows-Breather |

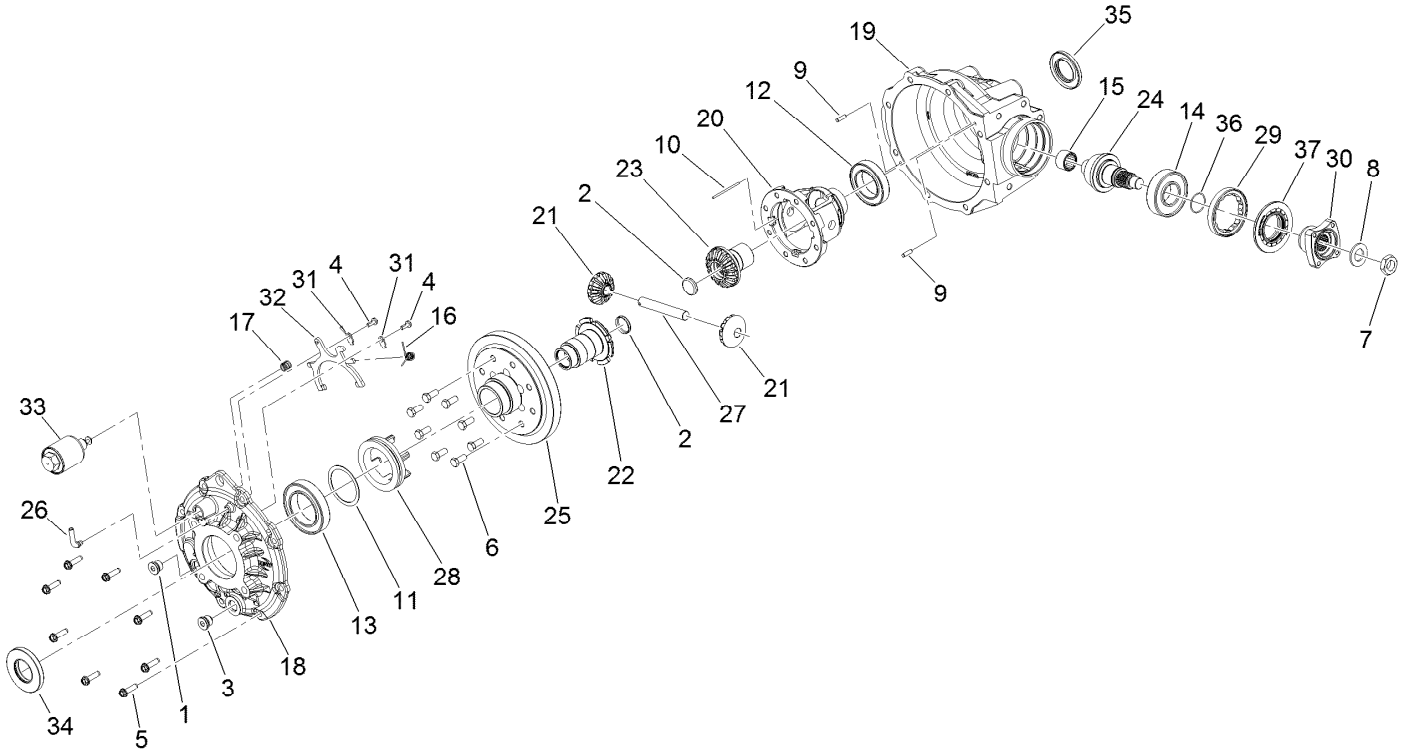


# Differential Assembly No. 121-9604

| Ref. | Part Number | Qty. | Description |
|---|---|---|---|
| 1 | 130-4600 | 1 | Plug |
| 2 | 130-4691 | 2 | Plug-Expansion |
| 3 | 130-4601 | 1 | Plug-Magnetic |
| 4 | 130-4660 | 2 | Screw |
| 5 | 130-4603 | 8 | Screw |
| 6 | 130-4661 | 8 | Screw-Cap, HH |
| 7 | 130-4662 | 1 | Nut-Hex |
| 8 | 130-4663 | 1 | Washer-Locking |
| 9 | 130-4609 | 2 | Pin-Dowel |
| 10 | 130-4664 | 1 | Pin-Dowel |
| 11 | 130-4665 | 1 | Shim |
| 12 | 130-4666 | 1 | Bearing-Ball |
| 13 | 130-4667 | 1 | Bearing-Ball |
| 14 | 130-4668 | 1 | Bearing-Ball |
| 15 | 130-4669 | 1 | Bearing-Needle |
| 16 | 130-4671 | 1 | Spring-Torsion, Return |
| 17 | 130-4670 | 1 | Spring-Compression |
| 18 | 130-4672 | 1 | Cover-Output |
| 19 | 130-4673 | 1 | Gearcase |
| 20 | 130-4674 | 1 | Housing-Differential |
| 21 | 130-4677 | 2 | Pinion-Differential, 12T |
| 22 | 130-4678 | 1 | Gear-Output, 16T |
| 23 | 130-4679 | 1 | Gear-Output, 16T |
| 24 | 130-4675 | 1 | Pinion-Spiral, 10T |
| 25 | 130-4676 | 1 | Gear-Spiral, 37T |
| 26 | 130-4639 | 1 | Tube-Vent |
| 27 | 130-4680 | 1 | Pin-Pinion, Differential |
| 28 | 130-4681 | 1 | Dog-Engagement, 6 Pin |
| 29 | 130-4683 | 1 | Collar-Lock |
| 30 | 130-4682 | 1 | Coupler |
| 31 | 130-4684 | 2 | Retainer-Fork |
| 32 | 130-4685 | 1 | Fork-Pivot, Shift |
| 33 | 130-4686 | 1 | Solenoid |
| 34 | 130-4687 | 1 | Seal-Lip, Triple |
| 35 | 130-4688 | 1 | Seal-Lip, Triple |
| 36 | 130-4689 | 1 | O-Ring |
| 37 | 130-4690 | 1 | Seal-Lip, Triple |

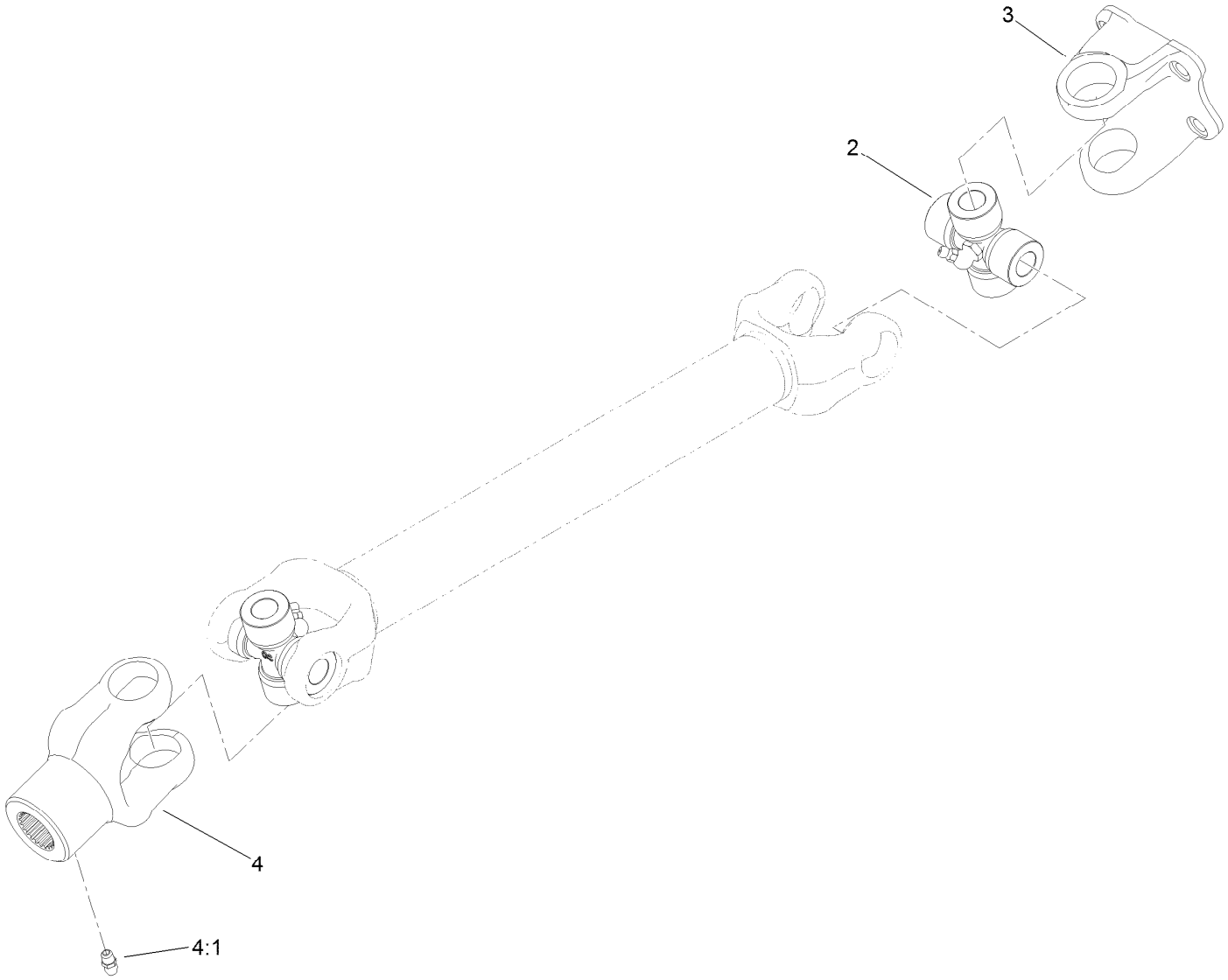


# Driveshaft Assembly No. 121-9832

| *Ref.* | *Part Number* | *Qty.* | *Description* |
|---|---|---|---|
| 2 | 121-9880 | 2 | U-Joint |
| 3 | 121-9822 | 1 | Yoke-Flange |
| 4 | 121-9879 | 1 | Yoke-Slip |
| 4:1 | 106-1104 | 1 | Fitting-Grease |

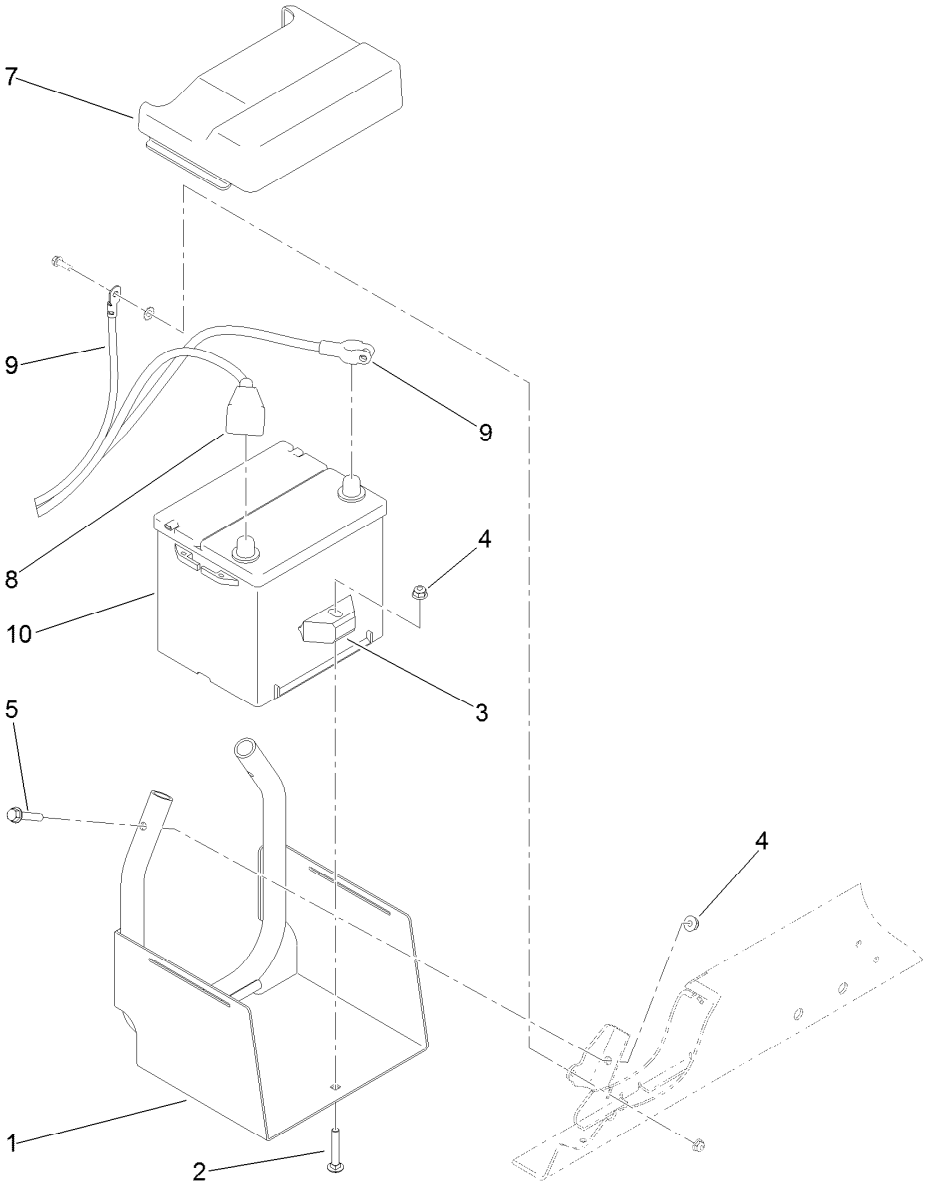


# Battery Installation Assembly

| Ref. | Part Number | Qty. | Description |
|---|---|---|---|
| 1 | 115-2237-03 | 1 | Tray-Battery |
| 2 | 3230-6 | 1 | Screw-CARR |
| 3 | 66-2490 | 1 | Retainer-Battery |
| 4 | 104-8300 | 3 | Nut-HF, NI |
| 5 | 94-5780 | 2 | Screw-HWH |
| 7 | 119-9496 | 1 | Cover-Battery |
| 8 | 122-0122 | 1 | Cable-Battery, Positive |
| 9 | 122-0121 | 1 | Cable-Battery, Negative |
| 10 | 106-5187 | 1 | Battery-Dry |

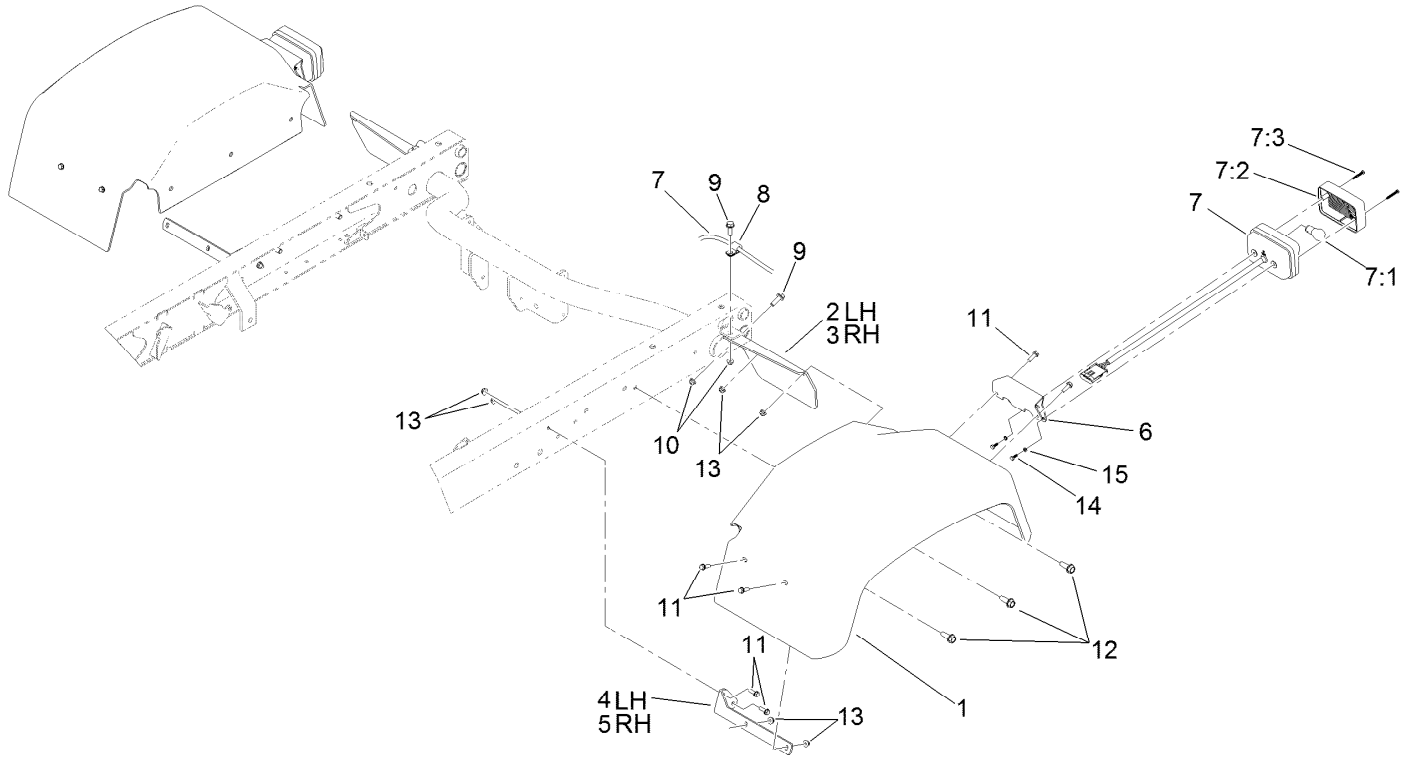


# Rear Tail Light and Fender Assembly

| Ref. | Part Number | Qty. | Description |
|---|---|---|---|
| 1 | 87-6660 | 2 | Fender-Rear |
| 2 | 93-8943-03 | 1 | Bracket-Fender, Rear (LH) |
| 3 | 93-8944-03 | 1 | Bracket-Fender, Rear (RH) |
| 4 | 93-8941-03 | 1 | Bracket-Fender, Front (LH) |
| 5 | 93-8942-03 | 1 | Bracket-Fender, Front (RH) |
| 6 | 121-6269-03 | 2 | Bracket-Light, Tail |
| 7 | 120-4820 | 2 | Light-Tail, Brake |
| 7:1 | 115-7858 | 1 | Bulb-7528 |
| 7:2 | 121-6271 | 1 | Lens-Light, Tail |

| Ref. | Part Number | Qty. | Description |
|---|---|---|---|
| 7:3 | 121-6272 | 2 | Screw-PPH |
| 8 | 2412-93 | 2 | Clamp-R |
| 9 | 3234-17 | 4 | Screw-HHF |
| 10 | 104-8300 | 4 | Nut-HF, NI |
| 11 | 32105-15 | 12 | Screw-HWH |
| 12 | 105-6245 | 6 | Screw-Tapping |
| 13 | 104-7201 | 12 | Nut-HF |
| 14 | 121-6320 | 4 | Screw-HH |
| 15 | 43-5920 | 4 | Washer-Lock, Spring |

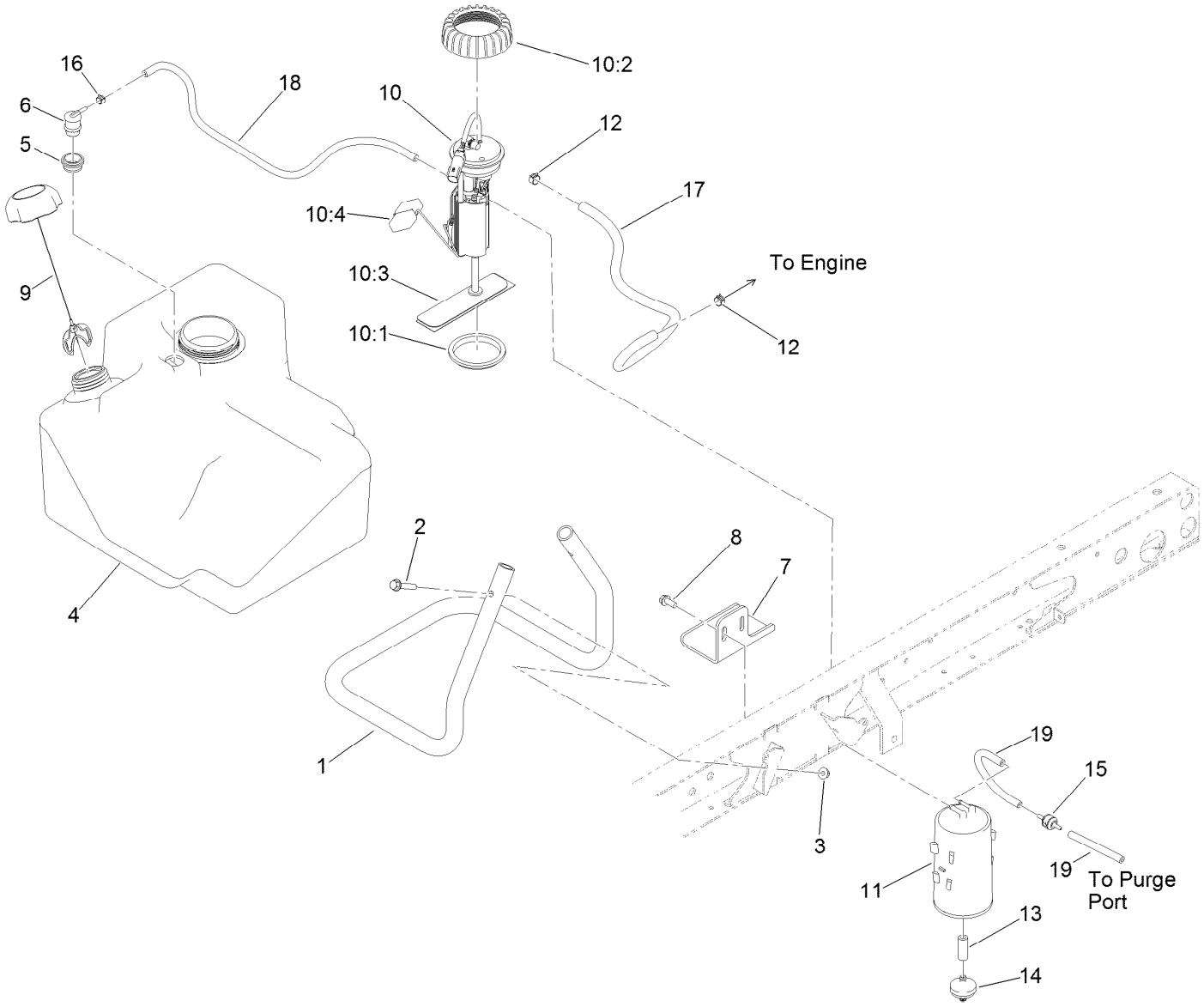


# Fuel System Assembly

| Ref. | Part Number | Qty. | Description |
|---|---|---|---|
| 1 | 115-7767-03 | 1 | Tube-Support |
| 2 | 94-5780 | 2 | Screw-HWH |
| 3 | 104-8300 | 2 | Nut-HF, NI |
| 4 | 115-7700 | 1 | Tank-Fuel |
| 5 | 114-0284 | 1 | Grommet |
| 6 | 114-0285 | 1 | Valve-Rollover |
| 7 | 114-8404 | 1 | Plate-Retainer |
| 8 | 32144-11 | 2 | Screw-HWHTF |
| 9 | 115-7788 | 1 | Cap-Fuel |
| 10 | 127-8801 | 1 | Fuel Pump ASM |
| 10:1 | 115-2163 | 1 | Gasket-Pump, Fuel |
| 10:2 | 115-2162 | 1 | Cap-Pump, Fuel |

| Ref. | Part Number | Qty. | Description |
|---|---|---|---|
| 10:3 | 115-7818 | 1 | Fuel Filter ASM |
| 10:4 | 120-4812 | 1 | Float |
| 11 | 115-2251 | 1 | Canister-Carbon |
| 12 | 92-2379 | 2 | Clamp-Hose |
| 13 | 106-5317 | 1 | Hose-Fuel |
| 14 | 115-7854 | 1 | Filter-Fuel, Inline |
| 15 | 115-7868 | 1 | Valve-Check, Vacuum |
| 16 | 2412-146 | 1 | Clamp-Hose |
| 17 | 109-0279 | 1 | Hose-Fuel |
| 18 | 121-0780 | 1 | Hose-Fuel |
| 19 | 115-7871 | 2 | Hose-Fuel |

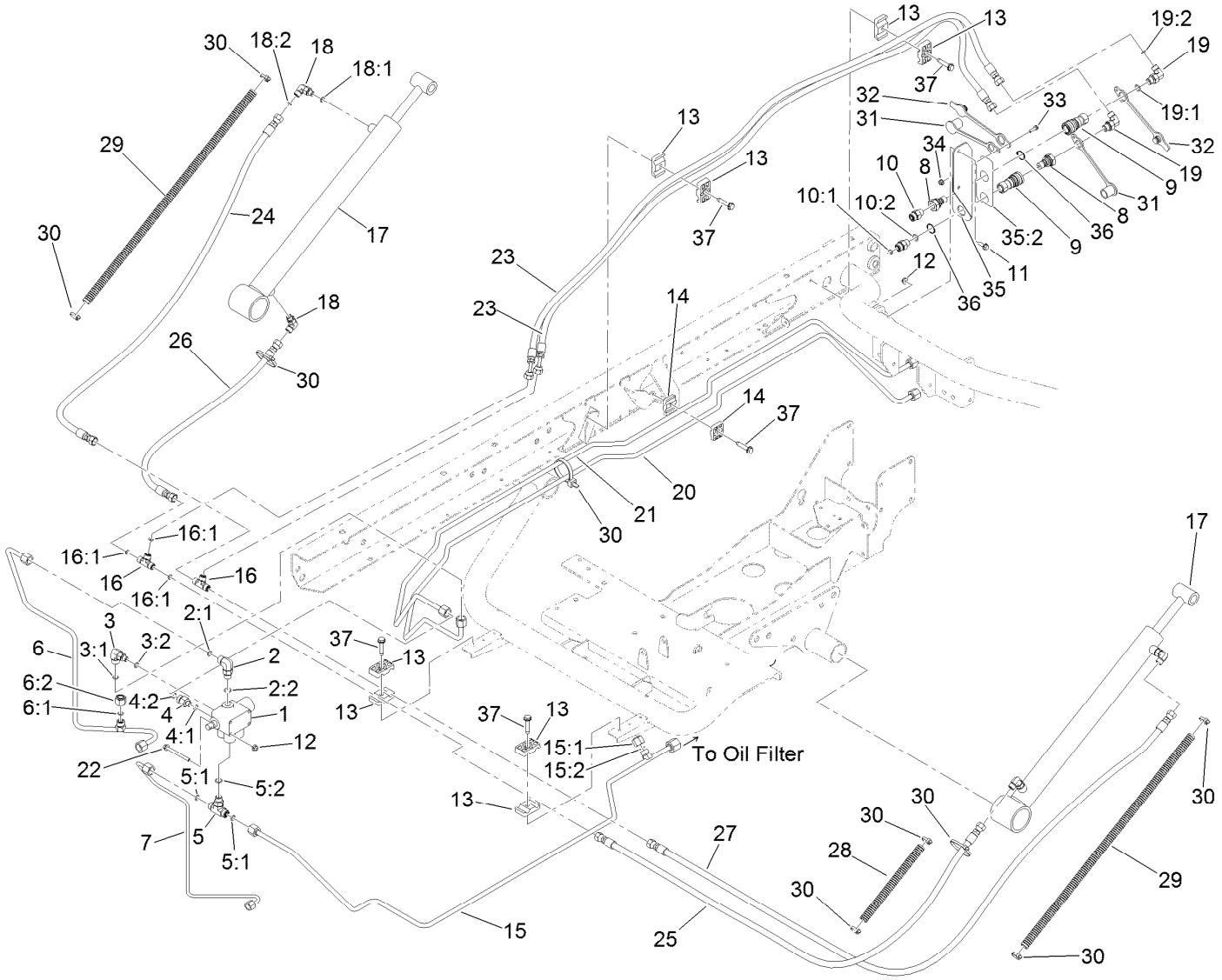


# Hydraulic Lift Valve Assembly

| Ref. | Part Number | Qty. | Description |
|---|---|---|---|
| 1 | 43-1950 | 1 | HYD Control Valve ASM |
| 2 | 340-77 | 1 | Fitting-Elbow, 90 DEG |
| 2:1 | 237-22 | 1 | O-Ring |
| 2:2 | 237-42 | 1 | O-Ring |
| 3 | 340-97 | 1 | Fitting-Elbow, 90 DEG |
| 3:1 | 237-22 | 1 | O-Ring |
| 3:2 | 237-78 | 1 | O-Ring |
| 4 | 340-88 | 1 | Fitting-Straight |
| 4:1 | 237-22 | 1 | O-Ring |
| 4:2 | 237-78 | 1 | O-Ring |
| 5 | 340-94 | 1 | Adapter |
| 5:1 | 237-22 | 2 | O-Ring |
| 5:2 | 237-42 | 1 | O-Ring |
| 6 | 127-8604 | 1 | Tube-HYD |
| 6:1 | 237-22 | 1 | O-Ring |
| 6:2 | 340-117 | 1 | Cap |
| 7 | 127-8605 | 1 | Tube-HYD |
| 8 | 106-7969 | 2 | Coupler-Quick, Male |
| 9 | 106-7968 | 2 | Coupler-Quick, Female |
| 10 | 340-2 | 2 | Fitting-Straight |
| 10:1 | 237-22 | 1 | O-Ring |

| Ref. | Part Number | Qty. | Description |
|---|---|---|---|
| 10:2 | 237-42 | 1 | O-Ring |
| 11 | 3234-4 | 2 | Screw-HHF |
| 12 | 104-7201 | 2 | Nut-HF |
| 13 | 56-7976 | 8 | Clamp-Tube |
| 14 | 56-7973 | 2 | Clamp-Tube |
| 15 | 121-9859 | 1 | Tube-HYD |
| 15:1 | 237-22 | 1 | O-Ring |
| 15:2 | 340-117 | 1 | Cap |
| 16 | 340-21 | 2 | Fitting |
| 16:1 | 237-21 | 3 | O-Ring |
| 17 | 106-7939 | 2 | HYD Cylinder ASM |
| 18 | 340-132 | 4 | Fitting-Elbow, 90 |
| 18:1 | 237-78 | 1 | O-Ring |
| 18:2 | 237-21 | 1 | O-Ring |
| 19 | 340-82 | 2 | Fitting-Elbow, 90 |
| 19:1 | 237-42 | 1 | O-Ring |
| 19:2 | 237-21 | 1 | O-Ring |
| 20 | 121-9862 | 1 | Tube-HYD |
| 21 | 121-9863 | 1 | Tube-HYD |
| 22 | 114-8410 | 2 | Screw-HHF |
| 23 | 121-9875 | 2 | Hose ASM-HYD HP |

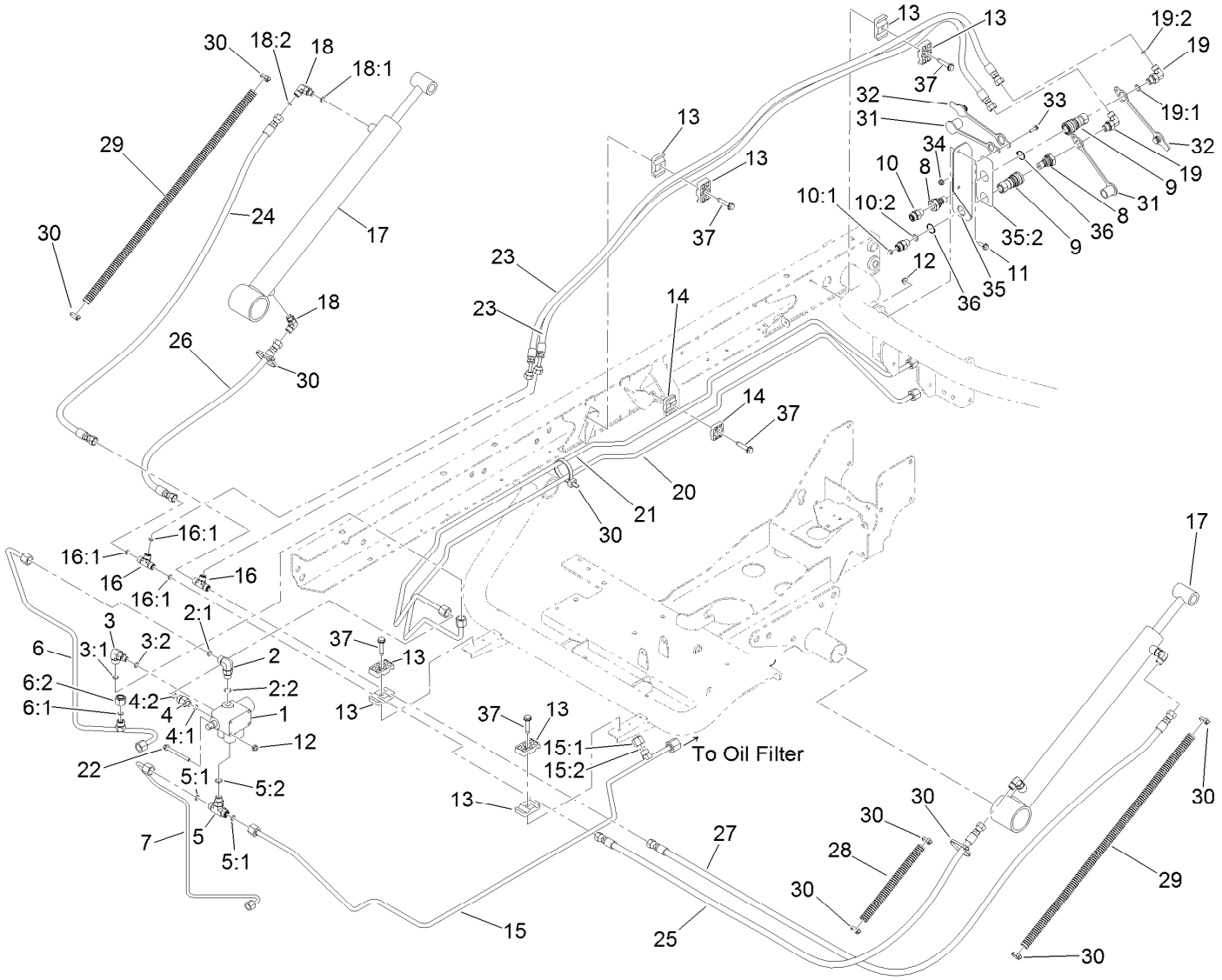


# Hydraulic Lift Valve Assembly (continued)

| Ref. | Part Number | Qty. | Description |
|---|---|---|---|
| 24 | 115-7711 | 1 | Hose-HYD |
| 25 | 104-3751 | 1 | Hose ASM-CYL, Lift |
| 26 | 108-6505 | 1 | Hose-HYD |
| 27 | 98-4587 | 1 | HYD Hose ASM |
| 28 | 24-7922 | 1 | Conduit-Convoluted, Split |
| 29 | 24-7923 | 2 | Conduit-Convoluted, Split |
| 30 | 3290-379 | 9 | Tie-Cable |
| 31 | 106-7881 | 2 | Cap-Dust, HYD |

| Ref. | Part Number | Qty. | Description |
|---|---|---|---|
| 32 | 106-7882 | 2 | Plug-Dust, HYD |
| 33 | 32105-13 | 1 | Screw-HWH |
| 34 | 3290-148 | 1 | Nut-HF |
| 35 | 115-7715 | 1 | Coupler Bracket ASM |
| 35:2 | 115-7723 | 1 | Decal-Disconnect, Quick |
| 36 | 32151-83 | 2 | Ring-Snap |
| 37 | 32144-57 | 5 | Screw |

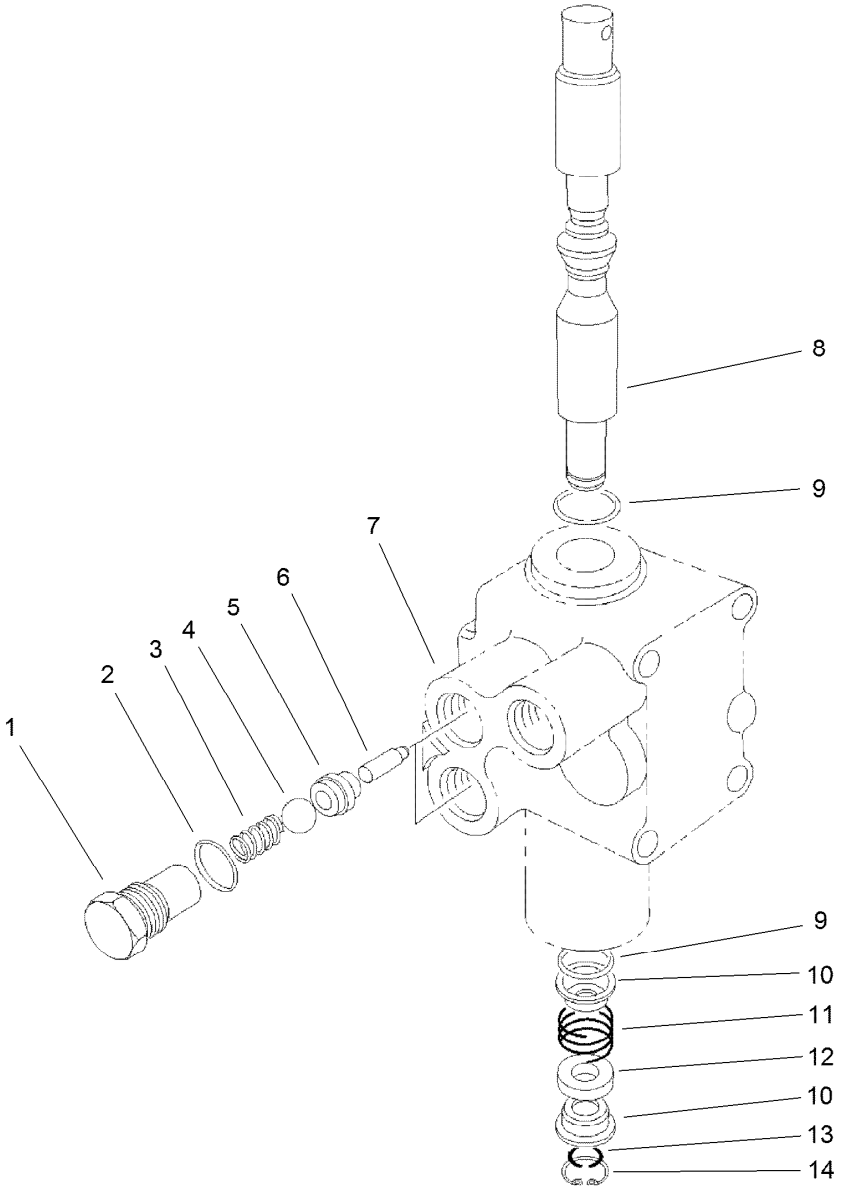


# Control Valve Assembly No. 43-1950

| Ref. | Part Number | Qty. | Description |
|---|---|---|---|
| 1 | 22-8330 | 2 | Plug |
| 2 | 237-42 | 2 | O-Ring |
| 3 | 22-8340 | 2 | Spring |
| 4 | 22-8350 | 2 | Ball |
| 5 | 22-8370 | 2 | Seat-Valve |
| 6 | 22-8360 | 2 | Pin |
| 7 | | 1 | Body ● |
| 8 | 22-8420 | 1 | Spool |
| 9 | 22-8500 | 2 | O-Ring |
| 10 | 22-8380 | 2 | Retainer |
| 11 | 22-8410 | 1 | Spring |
| 12 | 23-3030 | 1 | Spacer |
| 13 | 22-8480 | 1 | Ring-Snap |
| 14 | 22-8490 | 1 | Ring-Snap |

● Not serviced separately

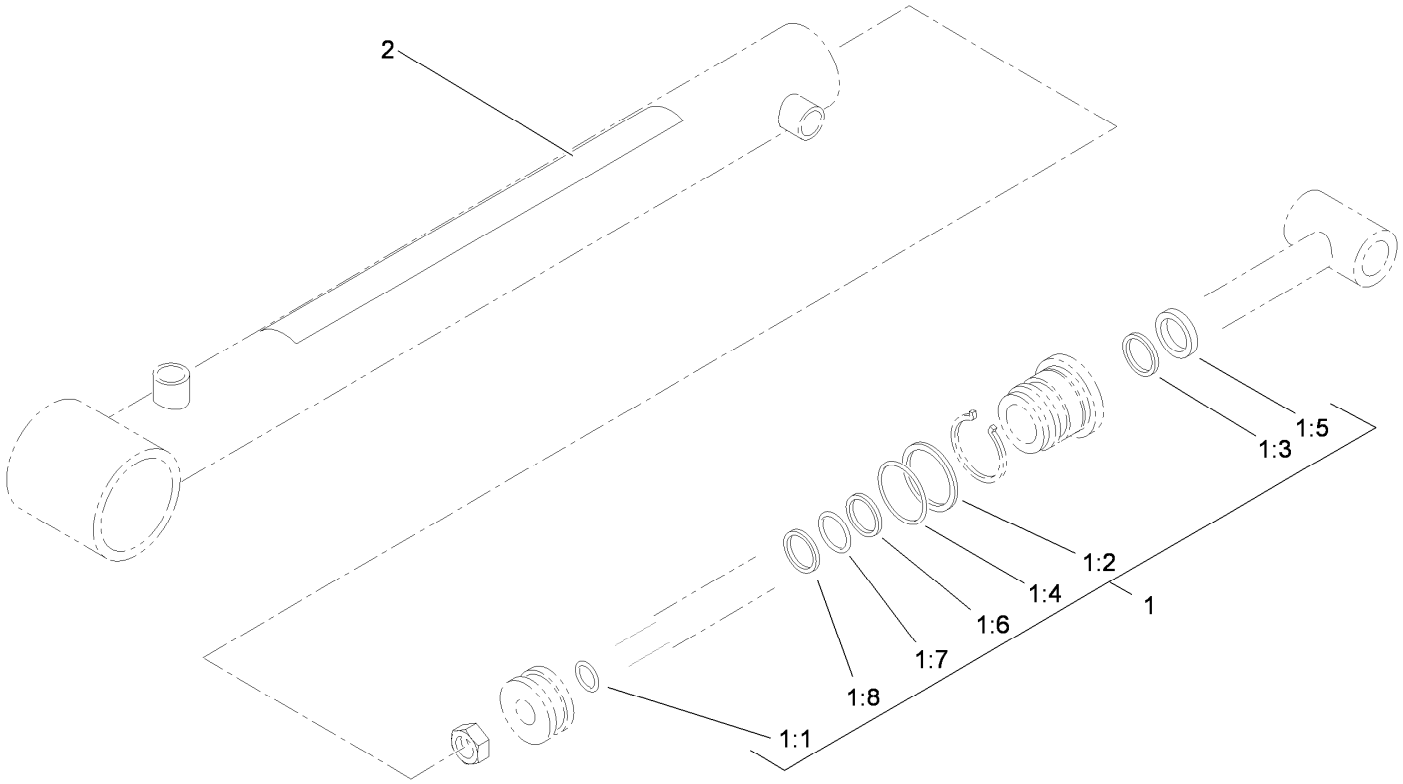


# Hydraulic Cylinder Assembly No. 106-7939

| *Ref.* | *Part Number* | *Qty.* | *Description* |
|---|---|---|---|
| 1 | 106-7941 | 1 | Seal Kit |
| 1:1 | | 1 | O-Ring ● |
| 1:2 | | 1 | O-Ring ● |
| 1:3 | | 1 | Seal ● |
| 1:4 | | 1 | Back-Up ● |
| 1:5 | | 1 | Wiper ● |
| 1:6 | | 1 | Seal ● |
| 1:7 | | 1 | O-Ring ● |
| 1:8 | | 1 | Ring-Wear ● |
| 2 | 93-9852 | 1 | Decal-Warning |

● Not serviced separately

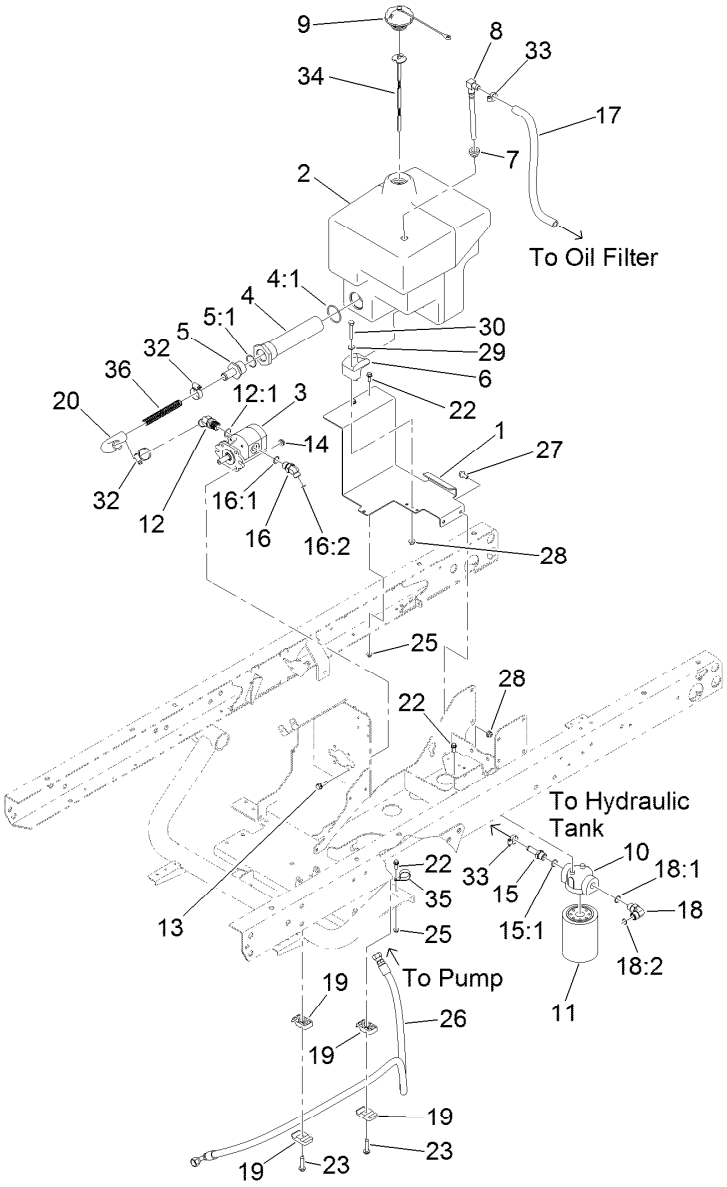


# Hydraulic Pump, Tank and Filter Assembly

| Ref. | Part Number | Qty. | Description |
|---|---|---|---|
| 1 | 121-9814-03 | 1 | Mount-Tank, Hydraulic |
| 2 | 121-9813 | 1 | Tank-HYD |
| 3 | 114-8302 | 1 | HYD Pump ASM |
| 4 | 115-2230 | 1 | Strainer-In Tank |
| 4:1 | 340-136 | 1 | O-Ring |
| 5 | 99-6932 | 1 | Fitting-STR |
| 5:1 | 237-117 | 1 | O-Ring |
| 6 | 107-4543 | 1 | Clamp |
| 7 | 104-0790 | 1 | Bushing |
| 8 | 104-0791 | 1 | Pipe-Stand |
| 9 | 115-7877 | 1 | Cap-Oil, HYD |
| 10 | 87-8780 | 1 | Head-Filter |
| 11 | 54-0110 | 1 | Filter-Oil, Transmission |
| 12 | 99-6929 | 1 | Fitting-Elbow45 |
| 12:1 | 237-80 | 1 | O-Ring |
| 13 | 3234-17 | 4 | Screw-HHF |
| 14 | 32128-20 | 4 | Nut-HF |
| 15 | 354-121 | 1 | Fitting-STR |
| 15:1 | 237-79 | 1 | O-Ring |
| 16 | 340-138 | 1 | Fitting-HYD, 45 DEG |
| 16:1 | 237-79 | 1 | O-Ring |
| 16:2 | 237-22 | 1 | O-Ring |
| 17 | 114-8438 | 1 | Hose-HYD |
| 18 | 340-98 | 1 | Fitting-Elbow, 90 DEG |
| 18:1 | 237-79 | 1 | O-Ring |
| 18:2 | 237-30 | 1 | O-Ring |
| 19 | 56-7970 | 4 | Clamp-Tube |
| 20 | 98-2713 | 1 | Hose-Suction, HYD |
| 22 | 115-5103 | 5 | Screw-HHF |
| 23 | 32144-57 | 2 | Screw |
| 25 | 104-7201 | 5 | Nut-HF |
| 26 | 121-9874 | 1 | HYD Hose ASM |
| 27 | 3234-47 | 2 | Screw-HHF |
| 28 | 104-8300 | 3 | Nut-HF, NI |
| 29 | 3256-23 | 1 | Washer-Plain |
| 30 | 322-10 | 1 | Screw-HH |
| 32 | 2412-129 | 2 | Clamp-Hose |
| 33 | 2412-36 | 2 | Clamp-Hose |
| 34 | 121-9885 | 1 | Dipstick |
| 35 | 2412-106 | 1 | Clamp-R |
| 36 | 99-5349 | 1 | Spring-Compression |

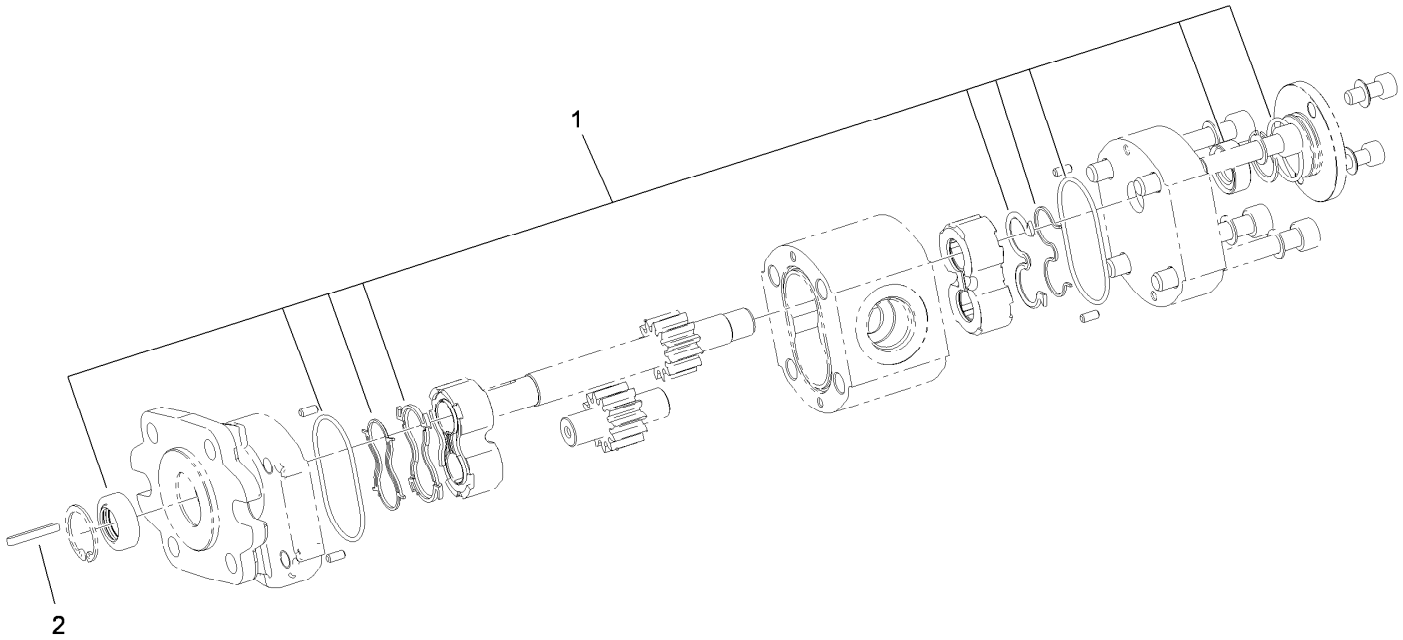


# Hydraulic Gear Pump Assembly No. 114-8302

| *Ref.* | *Part Number* | *Qty.* | *Description* |
|---|---|---|---|
| 1 | 115-8696 | 1 | Seal Kit |
| 2 | 115-7855 | 1 | Key-Square |

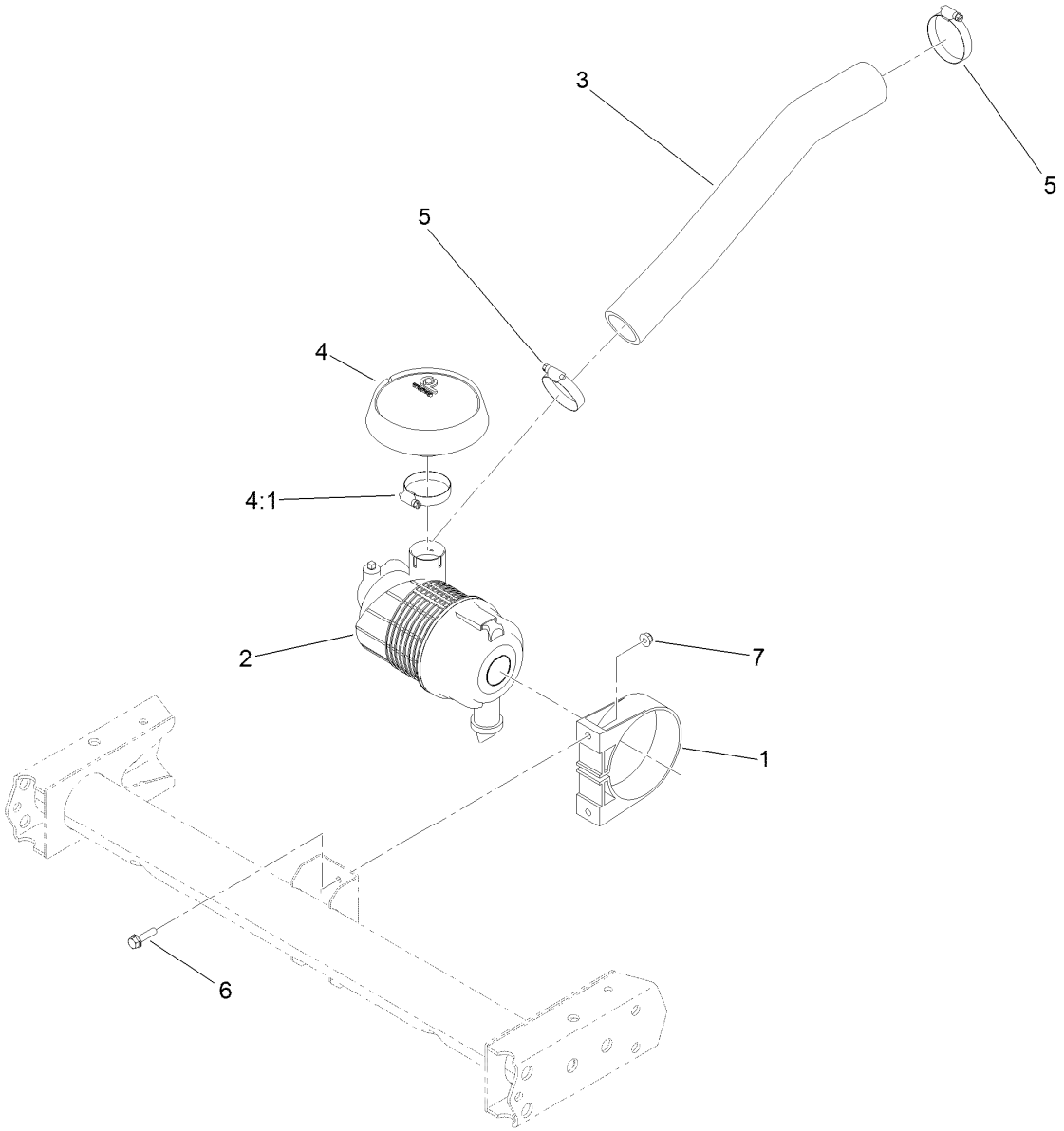


# Air Cleaner Assembly

| Ref. | Part Number | Qty. | Description |
|---|---|---|---|
| 1 | 95-5806 | 1 | Bracket-Mounting |
| 2 | 119-9714 | 1 | Air Cleaner ASM |
| 3 | 121-9852 | 1 | Hose-Intake, Engine |
| 4 | 120-4848 | 1 | Hood-Inlet, Air |
| 4:1 | 2412-130 | 1 | Clamp-Hose |
| 5 | 2412-130 | 2 | Clamp-Hose |
| 6 | 3234-36 | 2 | Screw-HHF |
| 7 | 104-8300 | 2 | Nut-HF, NI |

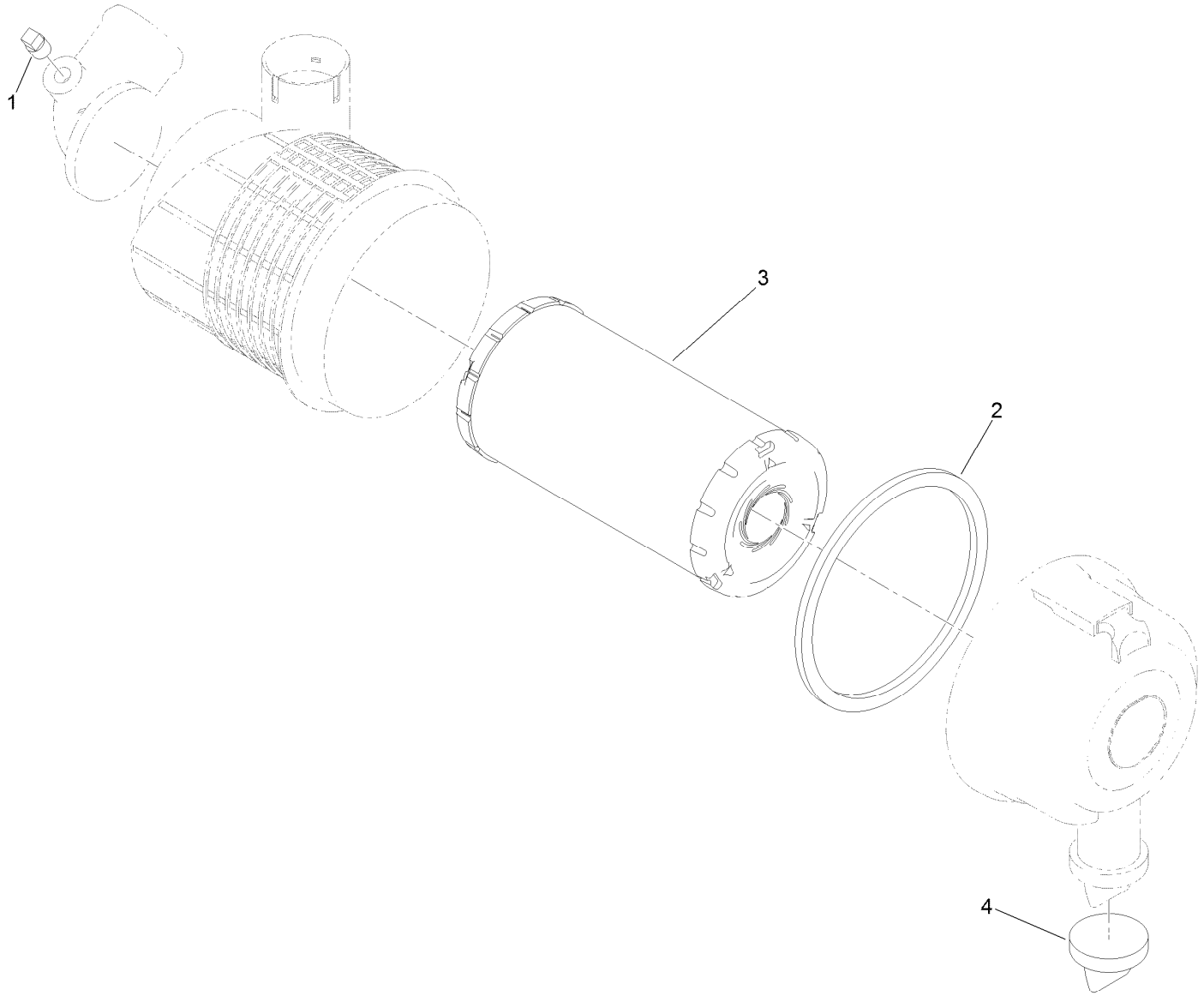


# Air Cleaner Assembly No. 119-9714

| *Ref.* | *Part Number* | *Qty.* | *Description* |
|---|---|---|---|
| 1 | 285-17 | 1 | Plug-Pipe |
| 2 | 106-6748 | 1 | Gasket |
| 3 | 108-3811 | 1 | Filter-Air |
| 4 | 104-0498 | 1 | Valve-Vacuator |

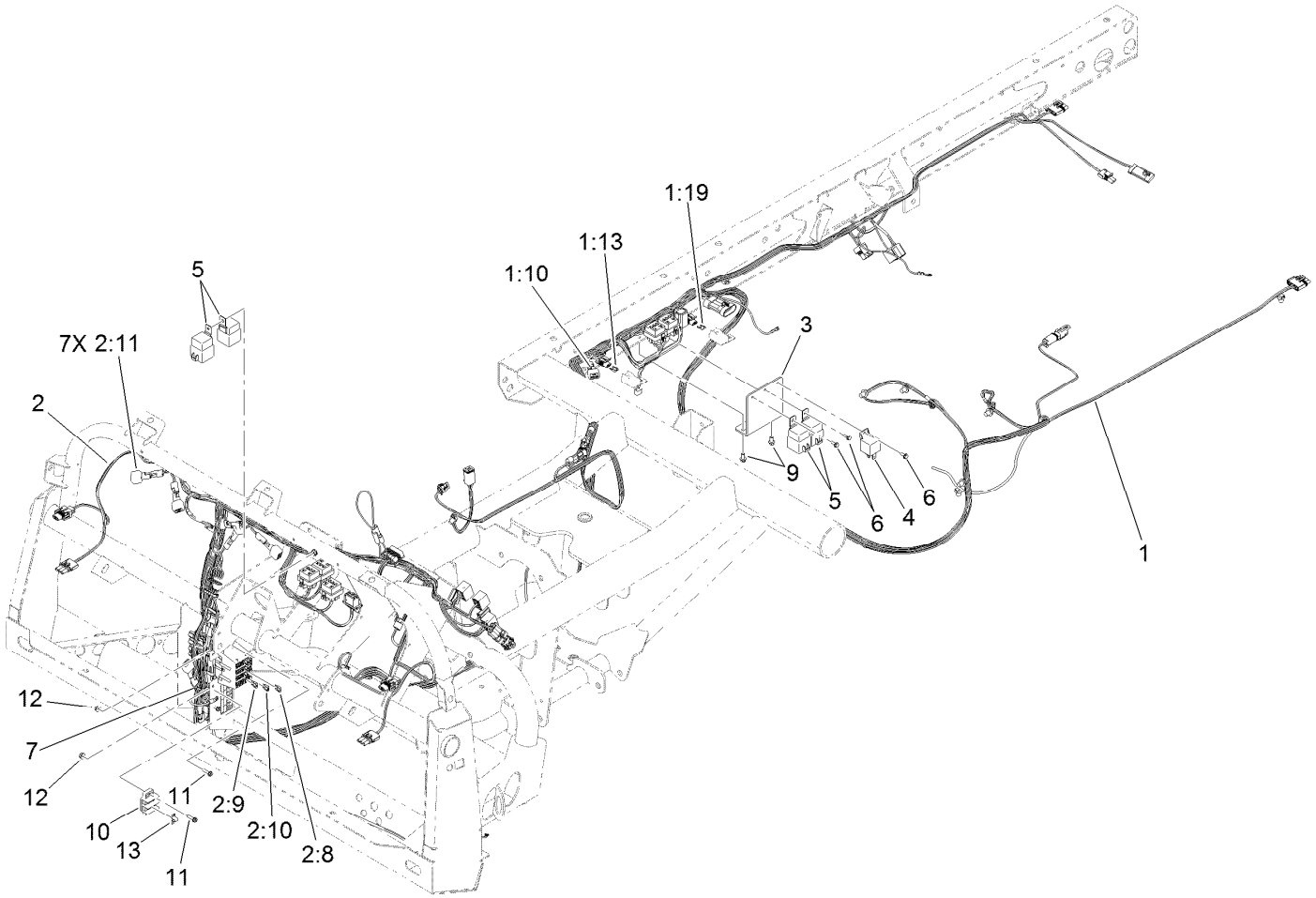


# Electrical Assembly

| Ref. | Part Number | Qty. | Description |
|---|---|---|---|
| 1 | 122-0089 | 1 | Harness-Wire, Rear |
| 1:10 | 100-4918 | 1 | Diode |
| 1:13 | 121-8870 | 1 | Fuse-Mini Blade, 30 Amp |
| 1:19 | 121-8867 | 1 | Fuse-Mini Blade, 15 Amp |
| 2 | 122-0088 | 1 | Harness-Wire, Front |
| 2:8 | 121-8866 | 4 | Fuse-Mini Blade, 10 Amp |
| 2:9 | 121-8867 | 3 | Fuse-Mini Blade, 15 Amp |
| 2:10 | 121-8870 | 1 | Fuse-Mini Blade, 30 Amp |
| 2:11 | 100-4918 | 7 | Diode |
| 3 | 121-9893 | 1 | Bracket-Relay |

| Ref. | Part Number | Qty. | Description |
|---|---|---|---|
| 4 | 99-7435 | 1 | Relay-Power |
| 5 | 99-7430 | 4 | Relay |
| 6 | 32144-112 | 3 | Screw-HWH |
| 7 | 3290-379 | 1 | Tie-Cable |
| 9 | 32144-4 | 2 | Screw-HWH |
| 10 | 42862 | 1 | Block-Terminal, Ground |
| 11 | 32105-13 | 4 | Screw-HWH |
| 12 | 3290-148 | 4 | Nut-HF |
| 13 | 42863 | 1 | Strip-Jumper |

# Attachments and Accessories

## For 07390 Workman HDX-Auto Utility Vehicle

| Product Name | Model/Part |
|---|---|
| Full Area Flatbed | 07301 |
| Full Area Flatbed Side Kit | 07302 |
| Fold Down Side Kit | 07303 |
| 2/3 Area Flatbed | 07321 |
| 2/3 Area Flatbed Side Kit | 07322 |
| Bed Liner | 07331 |
| Cab | 07339 |
| 1/3 Area Flatbed | 07341 |
| 1/3 Area Platform Lift | 07347 |
| Canopy | 07372 |
| Windshield | 07373 |
| Cab Door Kit | 07375 |
| Solid Window Cab Door Kit | 07376 |
| 4 Post Roll-Over Protection System | 07378 |
| 4-Wheel Drive Kit | 07391 |
| High-Flow Hydraulics Kit | 07395 |
| Hand Throttle Kit | 07420 |
| Premium All Season Hydraulic Fluid (55 Gallon Drum) | 108-1177 |
| Premium All Season Hydraulic Fluid (5 Gallon Pail) | 108-1178 |
| Premium Transmission/Hydraulic Tractor Fluid (55 Gallon Drum) | 108-1183 |
| Premium Transmission/Hydraulic Tractor Fluid (5 Gallon Pail) | 108-1184 |
| Premium All Purpose Grease (Tube) | 108-1190 |
| Premium All Season Gear Lube (Quart) | 108-1590 |
| Filter-Oil | 108-3847 |
| Remote Hydraulics Manifold Kit | 110-2626 |
| Tire-Rear, 24x13-12 | 110-5132 |
| Wheel-12in x 8.0in | 114-8260 |
| Side Mirror Kit | 115-7849 |
| Roll-Over Protection System Signal Kit | 117-4825 |
| Worklight Kit | 117-4827 |
| Remote Hydraulic Float Kit | 117-4828 |
| Cab Mirror Kit | 117-4830 |
| Receiver Hitch Kit | 117-4831 |
| Trailer Signal Kit | 117-4836 |
| 24x13-12 Tire and Wheel ASM | 117-4838 |
| Manual 4-Wheel Drive Control Kit | 119-0817 |
| Canopy for Four-Post Roll-Over Protection System Kit | 119-9457 |
| Road Light and Homologation Kit | 120-5030 |
| Brake and Signal Light Kit | 120-5045 |
| Premium Engine Oil 10w30 (55 Gal) | 121-6392 |
| Premium Engine Oil 10w30 (5 Gallon Pail) | 121-6393 |
| Trailer Brake Kit | 125-0123 |
| Backup Alarm Kit | 127-8729 |
| 1/3 Area Cover Kit | 127-8739 |
| High Air Intake Kit | 127-8740 |
| MVP Kit 400 Hour Filter Kit | 131-8276 |

# Attachments and Accessories (continued)

| | |
|---|---|
| Multi Pro WM Turf Sprayer | 41240 |
| Spreader Base Unit | 41253 |
| Vicon Spreader | 41256 |
| Topdresser 1800 | 44225 |
| Core Harvester Adapter Kit | 44242 |
| Pro Force Debris Blower | 44538 |
| Road-Ready Pro Force Debris Blower | 44539 |
| ProPass 200 Top Dresser with Twin Spinner and Wireless Control | 44700 |
| ProPass 200 Top Dresser with Twin Spinner | 44701 |
| Automatic Tailgate Release Kit | 92-1220 |
| Fuse Block | 92-2641 |
| Topdresser 1800 Lift Kit | 92-4452 |
| Spark Arrestor Screen | 94-8157 |
| Tire-Rear, 23x8.50-12 | 98-2993 |
| Tire-Rear, Industrial | 99-1091 |

## For 07390H Workman HDX-Auto Utility Vehicle

| Product Name | Model/Part |
|---|---|
| Full Area Flatbed | 07301 |
| Full Area Flatbed Side Kit | 07302 |
| Fold Down Side Kit | 07303 |
| 2/3 Area Flatbed | 07321 |
| 2/3 Area Flatbed Side Kit | 07322 |
| Bed Liner | 07331 |
| Cab | 07339 |
| 1/3 Area Flatbed | 07341 |
| 1/3 Area Platform Lift | 07347 |
| Heater Kit | 07349 |
| Canopy | 07372 |
| Windshield | 07373 |
| Cab Door Kit | 07375 |
| Solid Window Cab Door Kit | 07376 |
| 4 Post Roll-Over Protection System | 07378 |
| 4-Wheel Drive Kit | 07391 |
| High-Flow Hydraulics Kit | 07395 |
| Hand Throttle Kit | 07420 |
| Premium All Season Hydraulic Fluid (55 Gallon Drum) | 108-1177 |
| Premium All Season Hydraulic Fluid (5 Gallon Pail) | 108-1178 |
| Premium Transmission/Hydraulic Tractor Fluid (55 Gallon Drum) | 108-1183 |
| Premium Transmission/Hydraulic Tractor Fluid (5 Gallon Pail) | 108-1184 |
| Premium All Purpose Grease (Tube) | 108-1190 |
| Premium All Season Gear Lube (Quart) | 108-1590 |
| Filter-Oil | 108-3847 |
| Remote Hydraulics Manifold Kit | 110-2626 |
| Tire-Rear, 24x13-12 | 110-5132 |
| Wheel-12in x 8.0in | 114-8260 |
| Side Mirror Kit | 115-7849 |

# Attachments and Accessories (continued)


Roll-Over Protection System Signal Kit....117-4825
Worklight Kit....117-4827
Remote Hydraulic Float Kit....117-4828
Cab Mirror Kit....117-4830
Receiver Hitch Kit....117-4831
Trailer Signal Kit....117-4836
24x13-12 Tire and Wheel ASM....117-4838
Manual 4-Wheel Drive Control Kit....119-0817
Canopy for Four-Post Roll-Over Protection System Kit....119-9457
Road Light and Homologation Kit....120-5030
Brake and Signal Light Kit....120-5045
Premium Engine Oil 10w30 (55 Gal)....121-6392
Premium Engine Oil 10w30 (5 Gallon Pail)....121-6393
Trailer Brake Kit....125-0123
Backup Alarm Kit....127-8729
1/3 Area Cover Kit....127-8739
High Air Intake Kit....127-8740
MVP Kit 400 Hour Filter Kit....131-8276
Multi Pro WM Turf Sprayer....41240
Spreader Base Unit....41253
Vicon Spreader....41256
Topdresser 1800....44225
Core Harvester Adapter Kit....44242
Pro Force Debris Blower....44538
Road-Ready Pro Force Debris Blower....44539
ProPass 200 Top Dresser with Twin Spinner and Wireless Control....44700
ProPass 200 Top Dresser with Twin Spinner....44701
Automatic Tailgate Release Kit....92-1220
Fuse Block....92-2641
Topdresser 1800 Lift Kit....92-4452
Spark Arrestor Screen....94-8157
Tire-Rear, 23x8.50-12....98-2993
Tire-Rear, Industrial....99-1091

**Notes:**

**Notes:**

**Notes:**

TORO®

Count on it.