Form No. 3396-987 Rev E

TORO®

Count on it.

Parts Catalog

Workman® HDX-Auto

Utility Vehicle

Model No. 07390—Serial No. 315001001 and Up

Model No. 07390H—Serial No. 315001001 and Up

Register at www.Toro.com.
Original Instructions (EN)

3396-987 E

Ordering Replacement Parts

To order replacement parts, please supply the part number, the quantity, and the description of each part desired.

Understanding Reference Numbers

Each identified part in an illustration has a reference number. The reference number for a part also appears in the parts list, along with other information about the part.

This catalog uses two special reference number formats, one to indicate parts in a service assembly and another to indicate the quantity of a given part in an illustration.

Service Assembly Reference Numbers

Parts in service assemblies have reference numbers in the form a:b. The a represents the reference number of the entire service assembly and the b represents a sequential number unique to each part within the service assembly.

For example, a wheel assembly might be identified by reference number 6, the tire by 6:1, the valve by 6:2, and the wheel by 6:3. When you order the assembly identified by reference number 6, you receive all parts identified by reference numbers 6:1,6:2, and 6:3. However, you may also order any part individually. Reference numbers of this type appear in illustration and in parts lists.

Reference Numbers Indicating Quantity

In an illustration, if a reference number indicates more than one part, the reference number has the form nX y. The n represents the quantity of the part, the X is the multiplication symbol, and the y represents the reference number.

For example, in an illustration, the reference number 2X 37 means that two of the parts identified by reference number 37 are indicated.

Contents

Front Frame Assembly . . . 4
Rear Frame and Suspension Assembly . . . 5
Rear Axle and Tire Assembly . . . 6
Brake Caliper Assembly No. 127-7424 . . . 7
Front and Rear Brake Line Assembly . . . 8
Front Suspension Assembly . . . 9
Steering and Front Wheel Assembly . . . 10
Steering Linkage Assembly . . . 11
Hydraulic Cylinder Assembly No. 112-3217 . . . 12
Front Control Arm Assembly . . . 13
Master Cylinder and Brake Pedal Assembly . . . 14
Master Cylinder Assembly No. 104-6782 . . . 15
Accelerator Pedal Assembly . . . 16
Center Console Assembly . . . 17
Bumper, Hood and Seat Base Assembly . . . 19
Dash Assembly . . . 20
Steering Hydraulic Assembly . . . 21
Steering Valve Assembly No. 120-4813 . . . 22
Seat Assembly . . . 23
Roll-Over Protection System Assembly . . . 24
Full Bed and Side Panel Assembly . . . 25
Engine and Transmission Support Assembly . . . 26
Engine and Exhaust Assembly . . . 27
Cooling System Assembly . . . 29
Radiator and Fan Assembly . . . 30
Clutch Assembly . . . 31
Primary Clutch Assembly No. 121-9739 . . . 33
Secondary Clutch Assembly No. 121-9740 . . . 34
Speed Limiter Cover Assembly . . . 35
Transmission Assembly . . . 36
Transmission Assembly No. 121-9603 . . . 37
Rear Drive Assembly . . . 39
Differential Assembly No. 121-9604 . . . 40
Driveshaft Assembly No. 121-9832 . . . 41
Battery Installation Assembly . . . 42
Rear Tail Light and Fender Assembly . . . 43
Fuel System Assembly . . . 44
Hydraulic Lift Valve Assembly . . . 45
Control Valve Assembly No. 43-1950 . . . 47
Hydraulic Cylinder Assembly No. 106-7939 . . . 48
Hydraulic Pump, Tank and Filter Assembly . . . 49
Hydraulic Gear Pump Assembly No. 114-8302 . . . 50
Air Cleaner Assembly . . . 51
Air Cleaner Assembly No. 119-9714 . . . 52
Electrical Assembly . . . 53
Attachments and Accessories . . . 54

© 2018—The Toro® Company

8111 Lyndale Avenue South
Bloomington, MN 55420

Contact us at www.Toro.com.
Printed in the USA.

All Rights Reserved

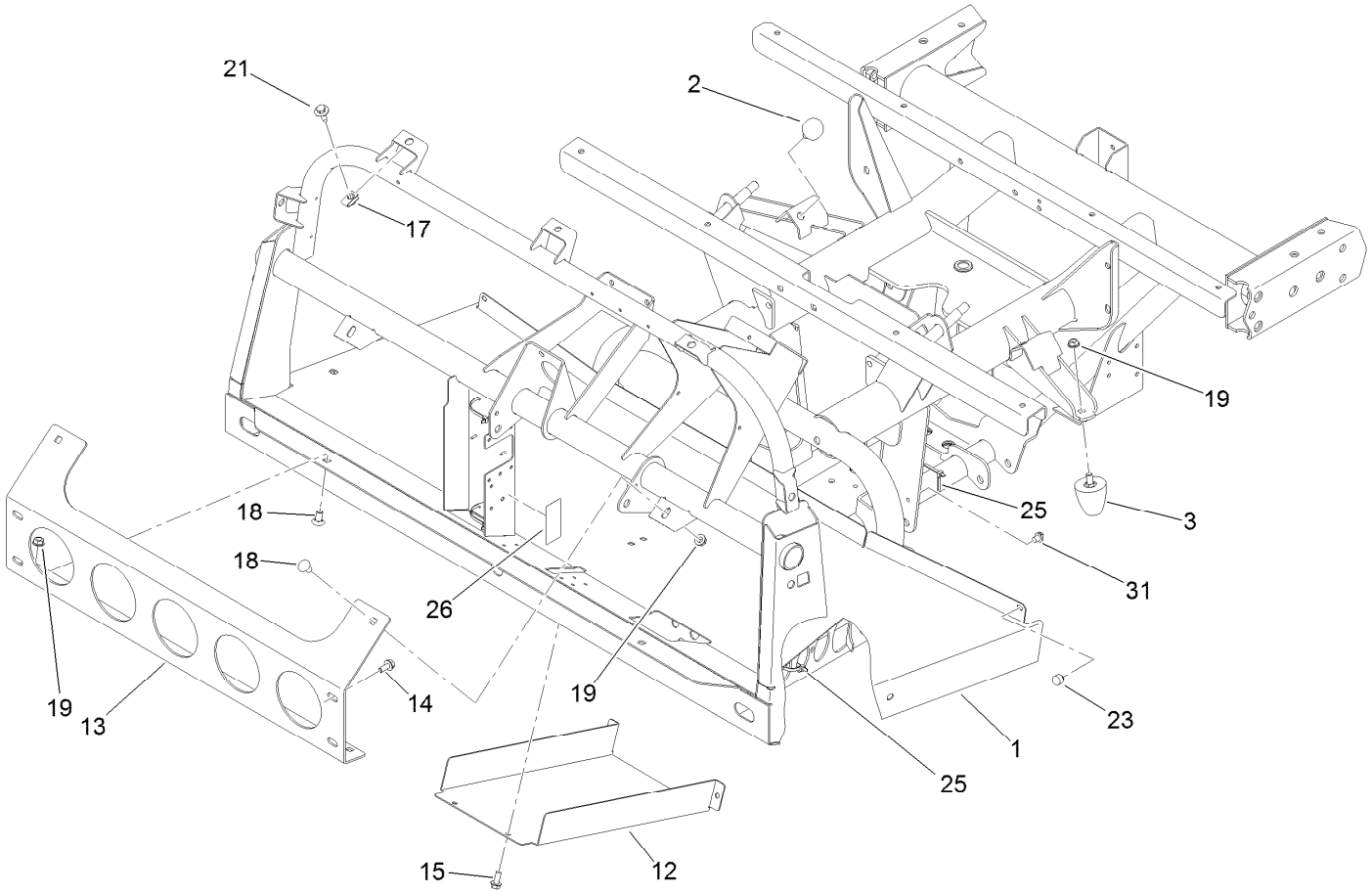

Front Frame Assembly

Ref.	*Part Number*	*Qty.*	*Description*
1	121-9745-03	1	Frame-Front
2	87-2440	2	Bumper-Rubber
3	26-0071	2	Snubber-Rubber
12	106-2427-03	1	Cover
13	114-8272-03	1	Bracket-Bumper
14	3234-5	4	Screw-HHF
15	32144-11	4	Screw-HWHTF
17	94-2413	7	Nut-U
18	3231-21	4	Screw-CARR
19	3290-357	6	Nut-HHF, Whiz
21	114-8418	7	Screw-HWH, Sems
23	107-8042	2	Bumper-Rubber
25	3290-379	7	Tie-Cable
26	127-8626	1	Decal-Electrical
31	32180-030	2	Clip-Tie

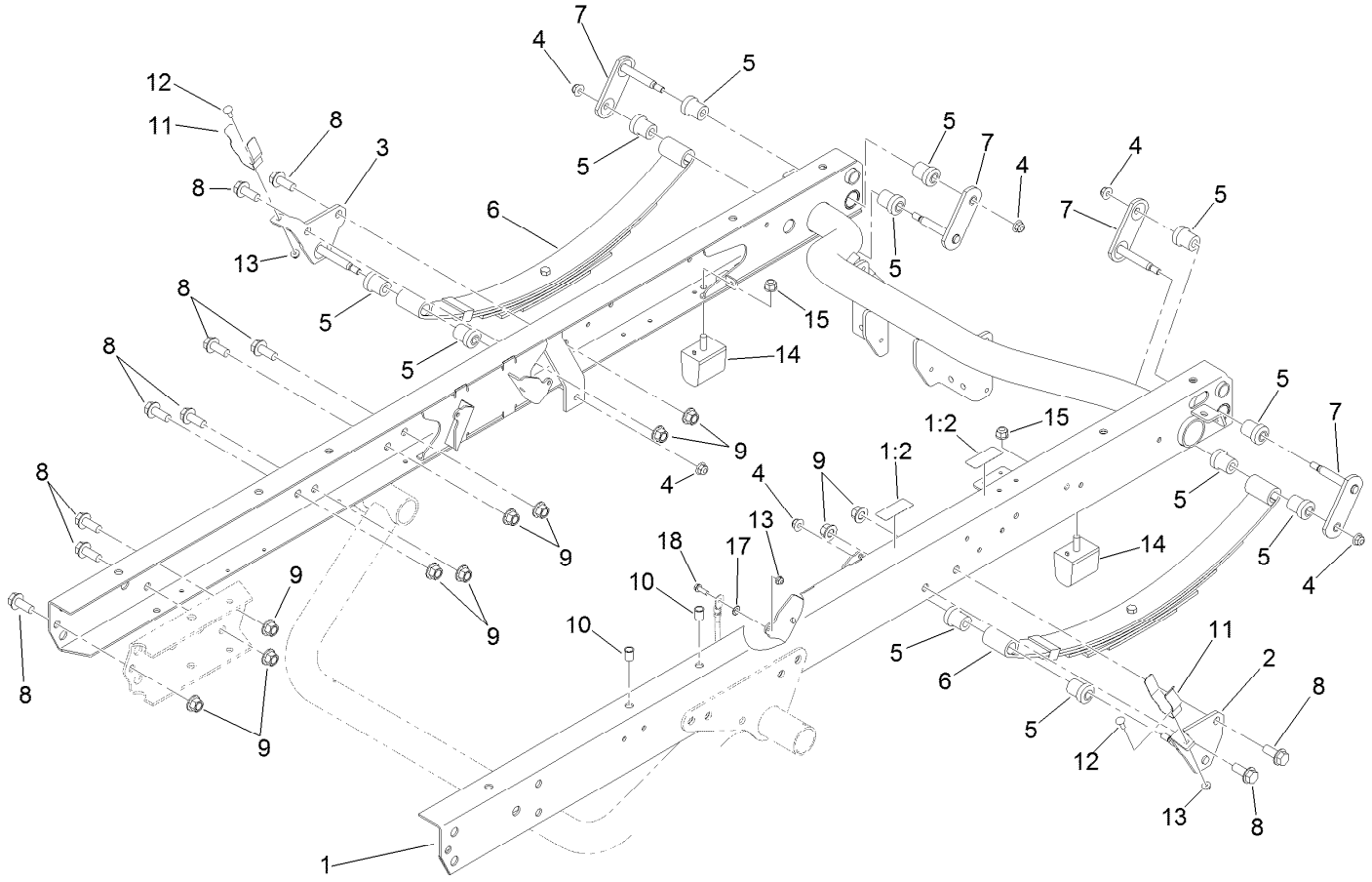

Rear Frame and Suspension Assembly

Ref.	Part Number	Qty.	Description
1	115-7911	1	Rear Frame ASM
1:2	115-2047	2	Decal-Surface, Hot
2	131-3474	1	Mount-Spring, LH
3	131-3472	1	Mount-Spring, RH
4	104-8301	6	Nut-HF, NI
5	87-4760	12	Bushing-Rubber
6	87-1490	2	Spring-Leaf, Rear
7	131-3476	4	Shackle
8	3234-38	18	Screw-HHF

Ref.	Part Number	Qty.	Description
9	99-5107	18	Nut-Lock
10	32148-9	4	Insert-Nut
11	108-3109	2	Retainer-Cylinder
12	3229-1	2	Bolt-CARR
13	104-7201	3	Nut-HF
14	87-3470	2	Bumper
15	103-9511	2	Nut-Lock, NI
17	3255-8	1	Washer-Lock
18	32105-15	1	Screw-HWH

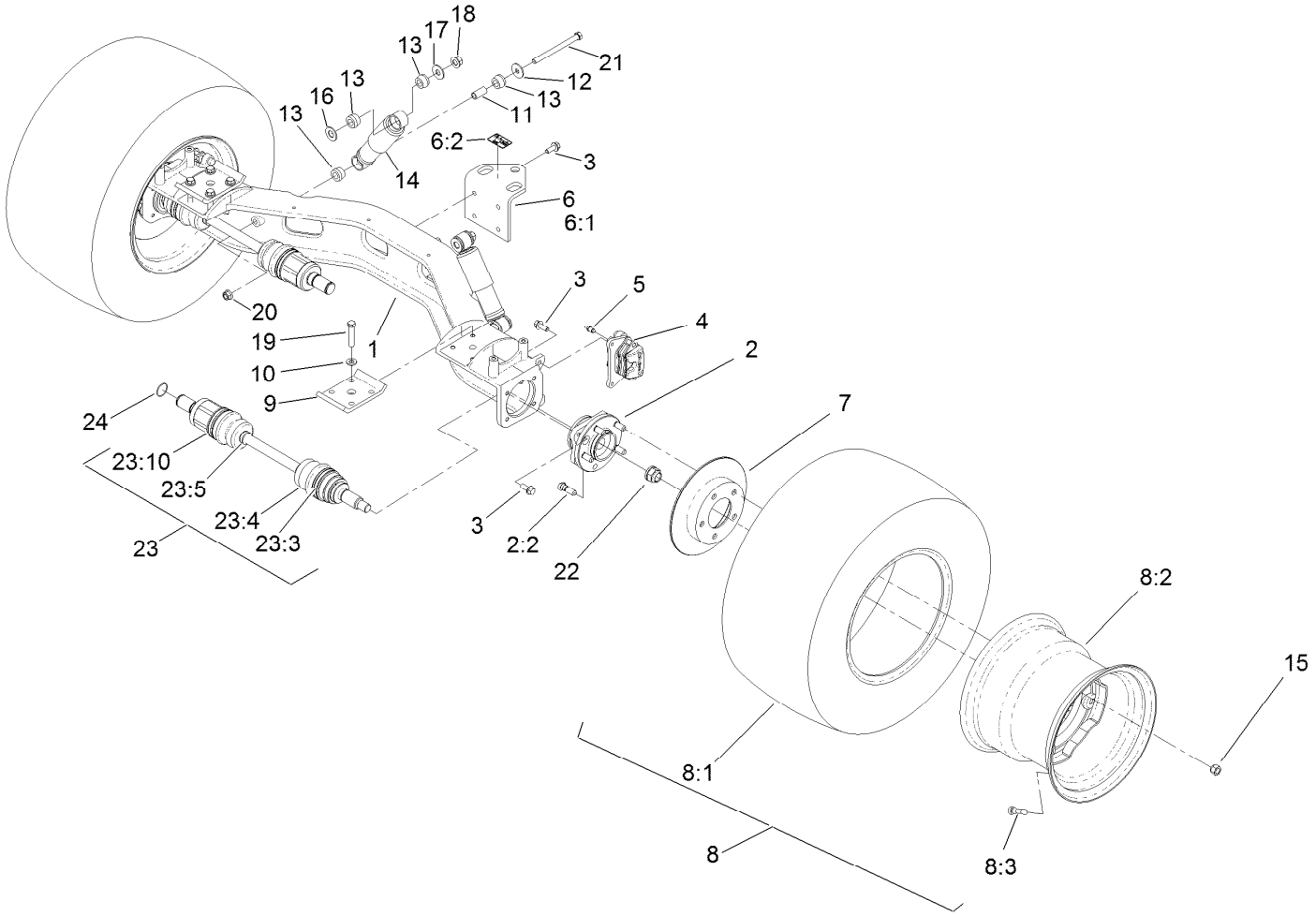

Rear Axle and Tire Assembly

Ref.	Part Number	Qty.	Description
1	119-9515	1	Axle-Rear
2	121-9751	2	Hub-Bearing, Wheel
2:2	121-9752	5	Stud-Wheel
3	3234-11	16	Screw-HHF
4	127-7424	2	Brake Caliper ASM
5	119-9509	2	Screw-Bleed
6	115-7742	1	Hitch ASM
6:1	92-5951-03	1	Angle-Hitch
6:2	115-7740	1	Decal-Load, Towing
7	114-8351	2	Rotor-Brake
8	131-6674	2	Tire And Wheel ASM
8:1	131-6673	1	Tire-Rear
8:2	131-6672	1	Wheel
8:3	232-27	1	Stem-Valve
9	87-7470-03	2	Plate-Spring, Clamp
10	87-7480	8	Washer
11	87-3600	2	Spacer-Absorber, Shock

Ref.	Part Number	Qty.	Description
12	87-5330	2	Washer
13	87-3920	8	Bushing
14	87-3110	2	Absorber-Shock
15	242-50	10	Nut-Lug
16	3256-27	2	Washer-Flat
17	3256-6	2	Washer-Flat
18	99-5107	2	Nut-Lock
19	115-2398	8	Bolt-HH
20	114-8417	2	Nut-HF, NI
21	114-8424	2	Screw-HH
22	115-2164	2	Nut-Spindle
23	121-9744	2	Axle ASM
23:3	107-2894	1	Clamp-Boot
23:4	107-2896	2	Boot
23:5	107-2895	2	Clamp-Boot
23:10	107-2893	1	Clamp-Boot
24	340-64	2	O-Ring

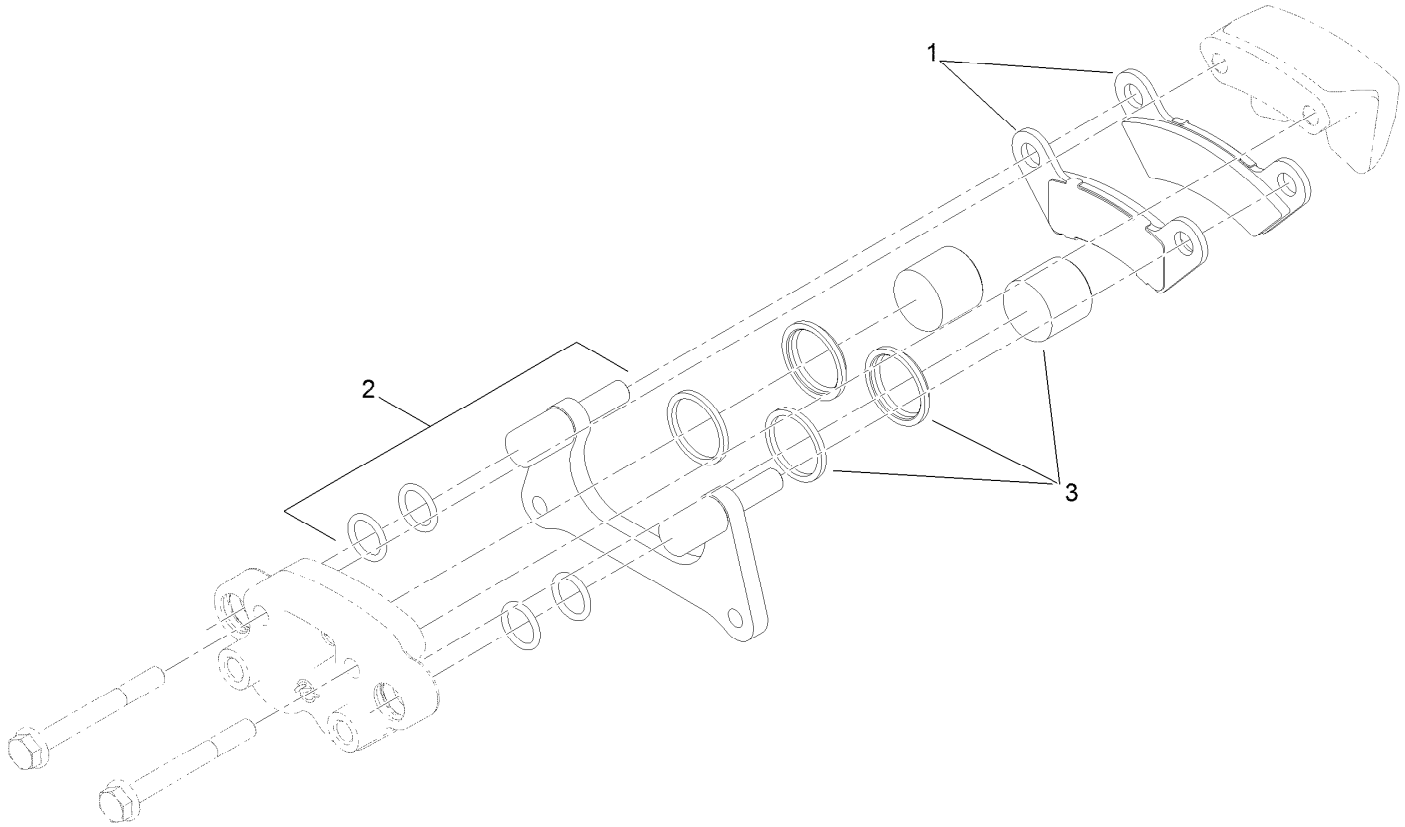

Brake Caliper Assembly No. 127-7424

Ref.	*Part Number*	*Qty.*	*Description*
1	119-9510	1	Pads-Brake
2	119-9511	1	Bracket Kit
3	119-9512	1	Piston Kit

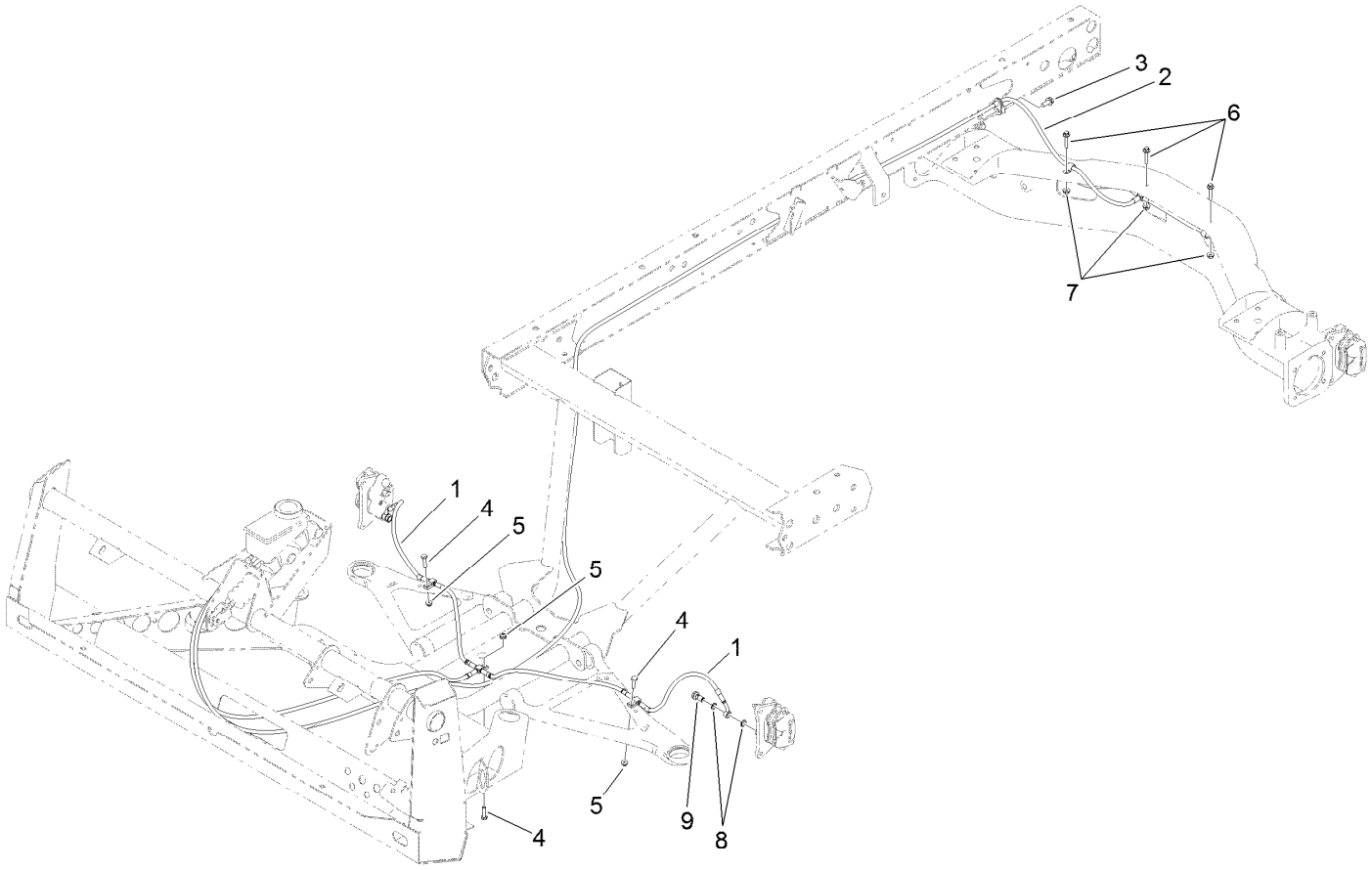

Front and Rear Brake Line Assembly

Ref.	*Part Number*	*Qty.*	*Description*
1	119-9682	1	Front Brake Line ASM
2	119-9681	1	Rear Brake Line ASM
3	32144-11	1	Screw-HWHTF
4	321-6	3	Screw-HH
5	104-7201	3	Nut-HF
6	3234-21	3	Screw-HHF
7	32128-33	3	Nut-HF
8	115-2341	8	Washer-Banjo
9	120-4875	4	Bolt-Flange, Banjo

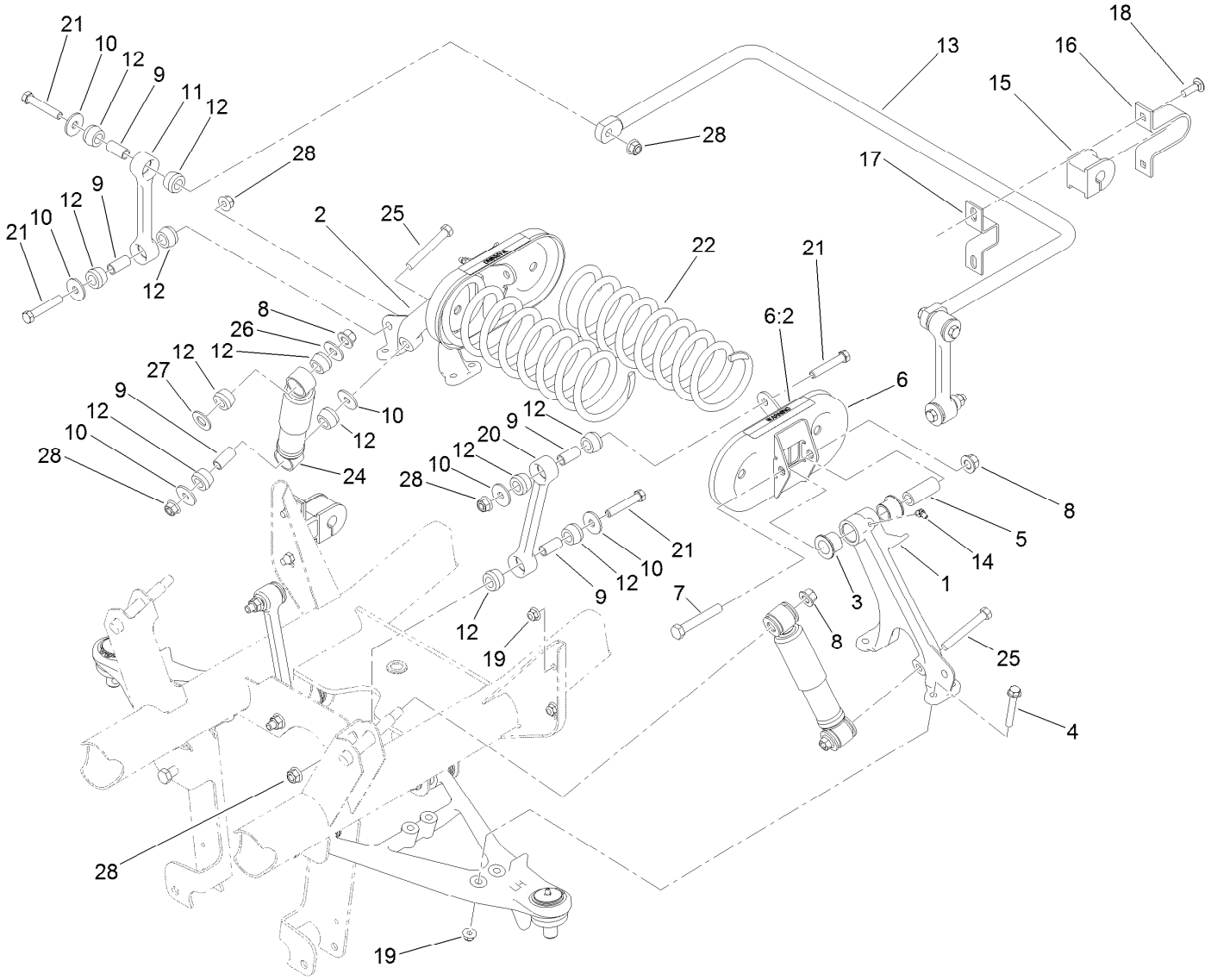

Front Suspension Assembly

Ref.	Part Number	Qty.	Description
1	87-0160	1	Tower-Control Arm, LH
2	87-0150	1	Tower-Control Arm, RH
3	33-3090	4	Bushing
4	3234-39	8	Screw-HHF
5	87-2500	2	Sleeve-Spring, Pivot
6	105-7958	2	Spring Cradle ASM
6:2	93-9879	1	Decal-Warning
7	325-13	2	Screw-HH
8	99-5107	4	Nut-Lock
9	87-3600	10	Spacer-Absorber, Shock
10	87-5330	12	Washer
11	119-6725	2	Link, Anti-Sway Bar
12	87-3920	24	Bushing
13	87-3850-03	1	Bar-Sway, Anti

Ref.	Part Number	Qty.	Description
14	302-11	2	Fitting-Lube, 45 DEG
15	87-3910	2	Bushing-Rubber
16	87-4010-03	2	Clamp-Bar, Sway
17	87-3890-03	2	Bracket-Bar, Sway
18	3231-25	4	Bolt-CARR
19	104-8301	12	Nut-HF, NI
20	119-6724	2	Link-Stabilizer
21	324-10	8	Screw-HH
22	105-4183-01	2	Spring-Compression
24	87-3110	2	Absorber-Shock
25	324-13	2	Screw-HH
26	3256-6	2	Washer-Flat
27	3256-27	2	Washer-Flat
28	114-8417	10	Nut-HF, NI

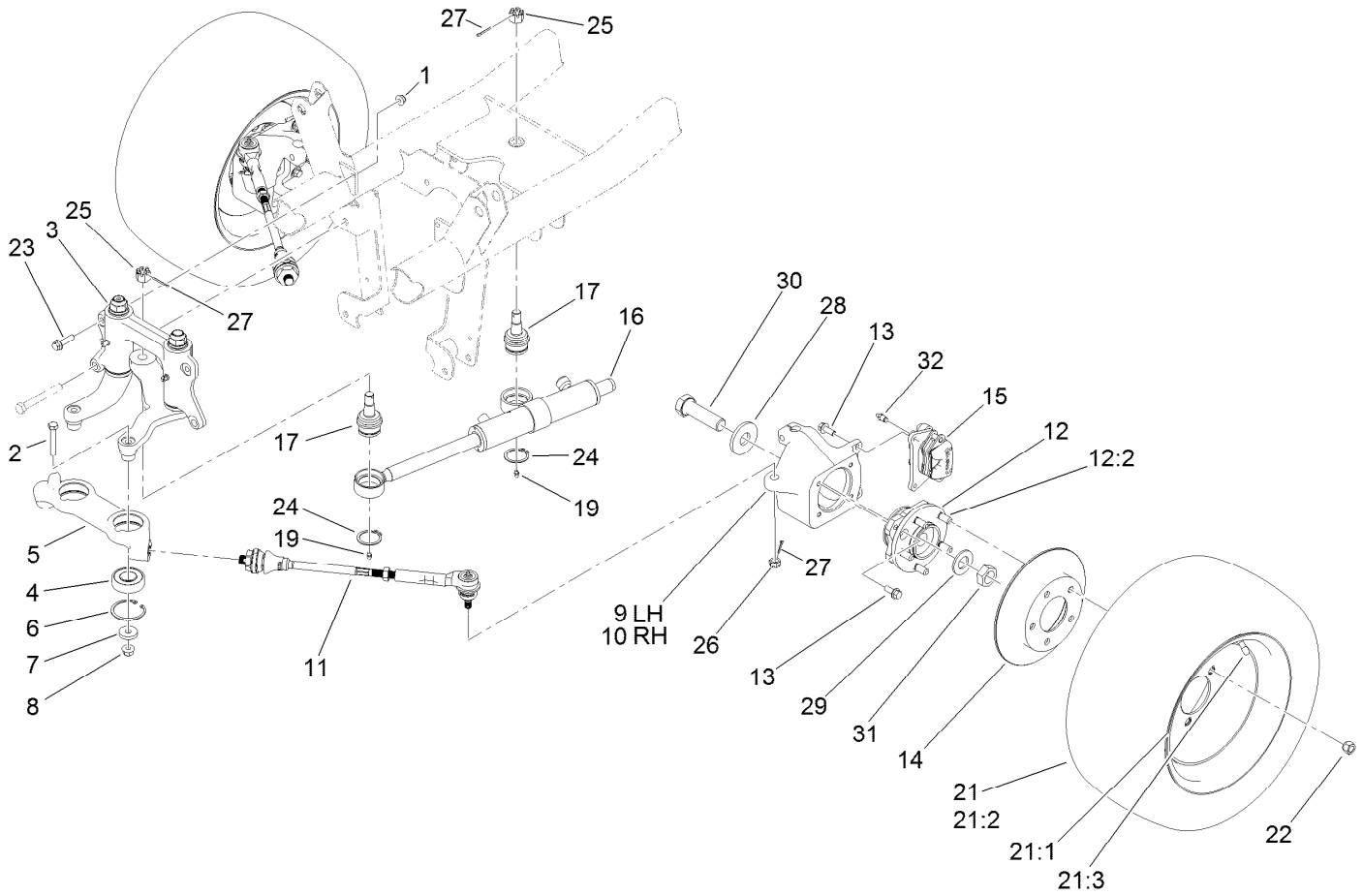

Steering and Front Wheel Assembly

Ref.	Part Number	Qty.	Description
1	104-8301	2	Nut-HF, NI
2	324-10	2	Screw-HH
3		1	Steering Linkage ASM ●
4	119-9548	2	Bearing-Ball
5	114-8296	1	Link-Center
6	32120-22	2	Ring-Snap, Internal
7	112843	2	Washer
8	114-8417	2	Nut-HF, NI
9	119-9513	1	Knuckle-LH
10	119-9514	1	Knuckle-RH
11	114-8356	2	Tie Rod ASM
12	121-9751	2	Hub-Bearing, Wheel
12:2	121-9752	5	Stud-Wheel
13	3234-11	12	Screw-HHF
14	114-8351	2	Rotor-Brake
15	127-7424	2	Brake Caliper ASM
16	112-3217	1	HYD Cylinder ASM

Ref.	Part Number	Qty.	Description
17	106-6774	2	Joint-Ball
19	302-5	2	Fitting-Grease
21	131-6671	2	Tire And Wheel ASM
21:1	131-6669	1	Wheel
21:2	131-6670	1	Tire
21:3	232-27	1	Stem-Valve
22	242-50	10	Nut-Lug
23	114-4681	2	Screw-HHF
24	32151-104	2	Ring-Retaining, External
25	32136-14	2	Nut-Hst
26	32136-3	2	Nut-SHH
27	3272-12	4	Pin-Cotter
28	104-0719	2	Washer-Hardened
29	3256-62	2	Washer-Flat
30	115-2173	2	Screw-HH
31	3296-49	2	Nut-Lock, NI
32	119-9509	2	Screw-Bleed

● Not serviced separately

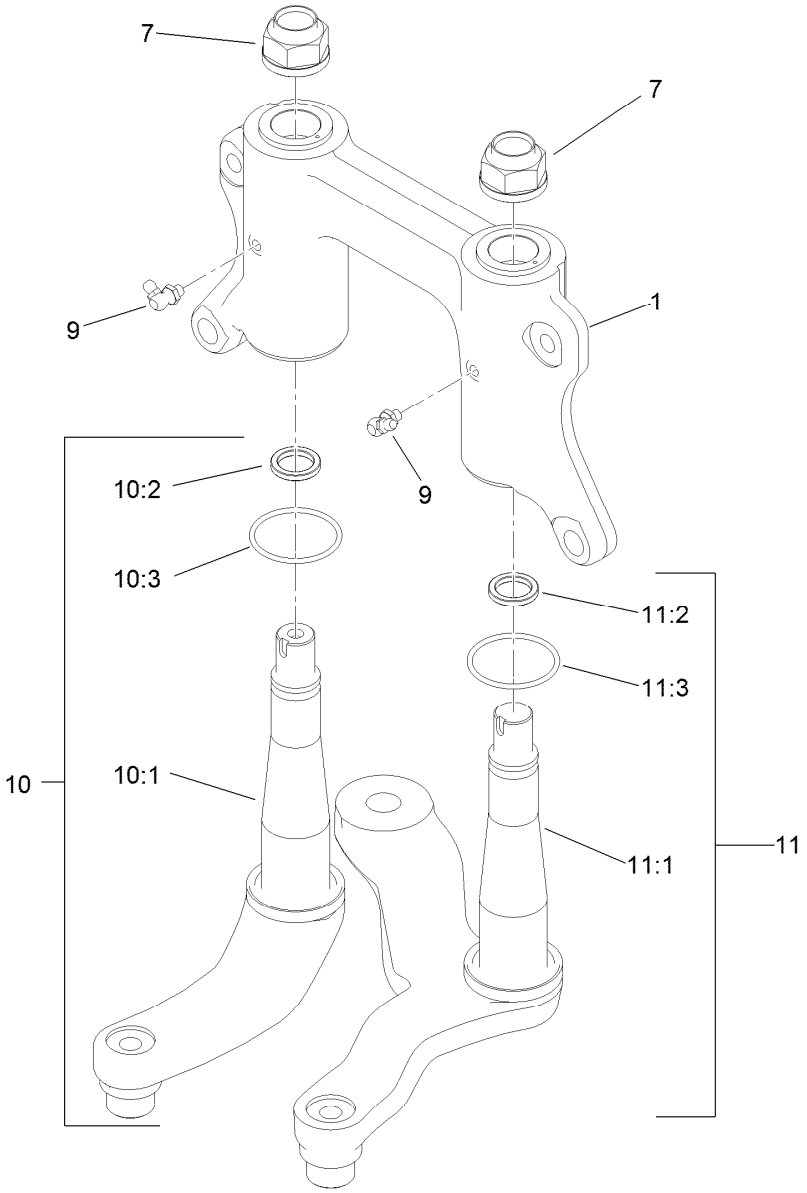

Steering Linkage Assembly

Ref.	*Part Number*	*Qty.*	*Description*
1	132-6767	1	Mount-Pivot, W/Bushings
7	115-2164	2	Nut-Spindle
9	302-60	2	Fitting-Grease
10	132-0794	1	Idler Arm ASM
10:1	132-0792	1	Idler Arm And Thrust Washer ASM
10:2	93-7510	1	Ring-Quad
10:3	131-3499	1	O-Ring
11	132-0795	1	Pitman Arm ASM
11:1	132-0793	1	Pitman Arm And Thrust Washer ASM
11:2	93-7510	1	Ring-Quad
11:3	131-3499	1	O-Ring

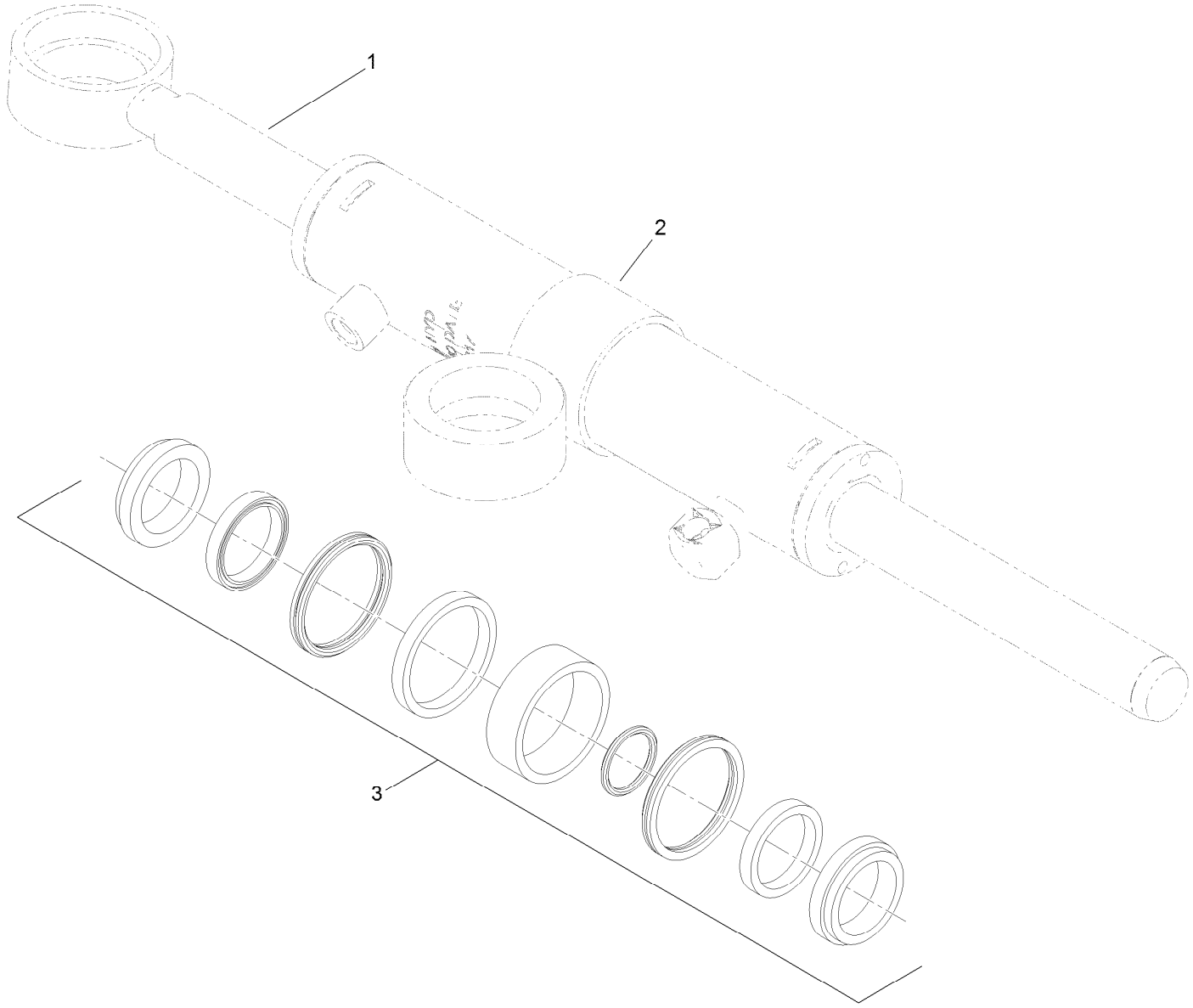

Hydraulic Cylinder Assembly No. 112-3217

Ref.	Part Number	Qty.	Description
1		1	Rod-Cylinder ●
2		1	Body-Cylinder ●
3	115-2160	1	Cylinder Repair Kit

● Not serviced separately

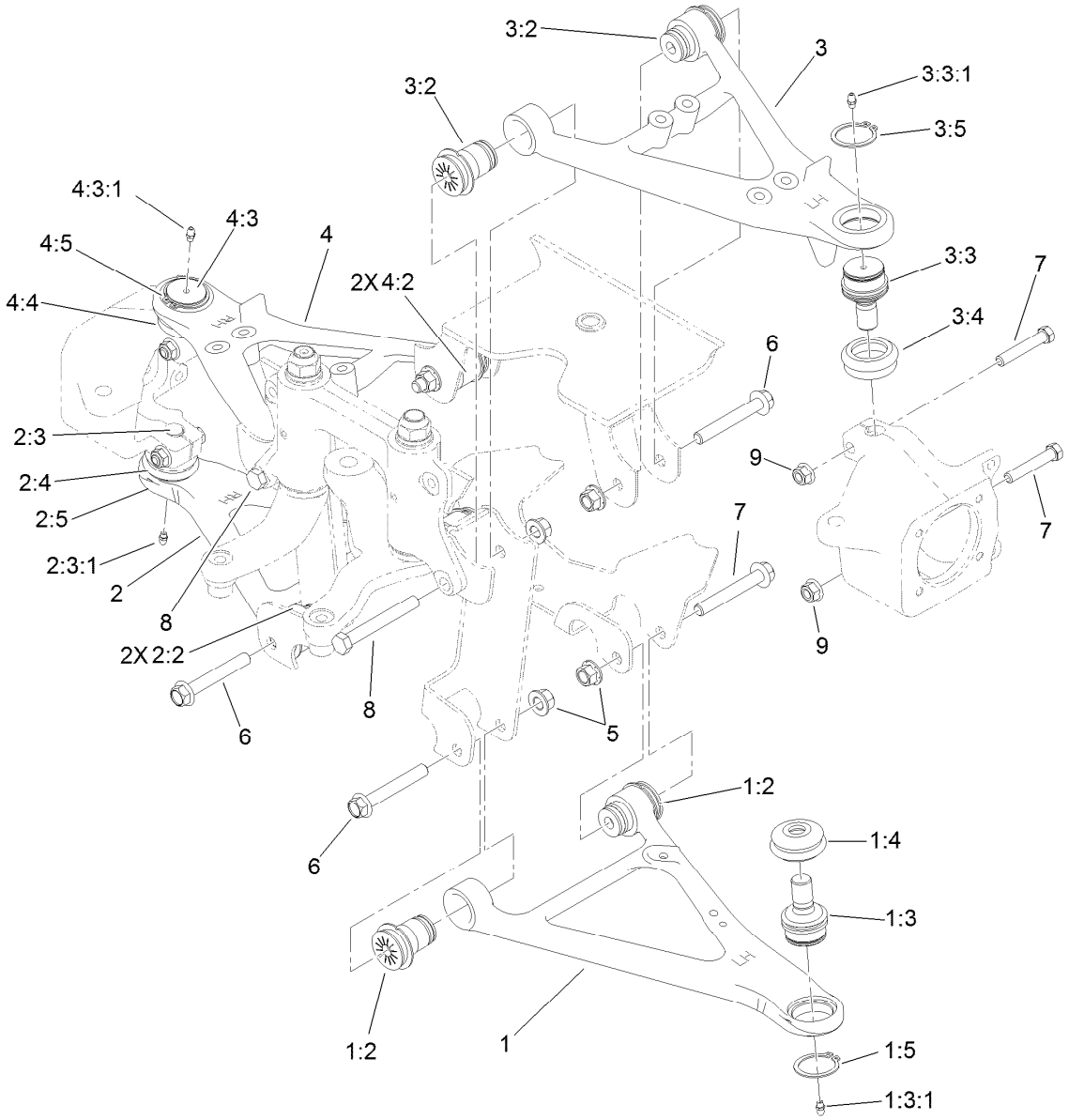

Front Control Arm Assembly

Ref.	Part Number	Qty.	Description
1	115-2405	1	Lower LH Control Arm ASM
1:2	87-1450	2	Bushing-Flange
1:3	115-2165	1	Ball Joint
1:3:1	302-5	1	Fitting-Grease
1:4	87-2420	1	Seal-Joint, Ball
1:5	32151-104	1	Ring-Retaining, External
2	115-2407	1	Lower RH Control Arm ASM
2:2	87-1450	2	Bushing-Flange
2:3	115-2165	1	Ball Joint
2:3:1	302-5	1	Fitting-Grease
2:4	87-2420	1	Seal-Joint, Ball
2:5	32151-104	1	Ring-Retaining, External
3	115-2404	1	Upper LH Control Arm ASM
3:2	87-1450	2	Bushing-Flange
3:3	115-2165	1	Ball Joint

Ref.	Part Number	Qty.	Description
3:3:1	302-5	1	Fitting-Grease
3:4	87-2420	1	Seal-Joint, Ball
3:5	32151-104	1	Ring-Retaining, External
4	115-2406	1	Upper RH Control Arm ASM
4:2	87-1450	2	Bushing-Flange
4:3	115-2165	1	Ball Joint
4:3:1	302-5	1	Fitting-Grease
4:4	87-2420	1	Seal-Joint, Ball
4:5	32151-104	1	Ring-Retaining, External
5	99-5107	8	Nut-Lock
6	114-8419	6	Screw-HHF
7	324-10	4	Screw-HH
8	325-17	2	Screw-HH
9	114-8417	4	Nut-HF, NI

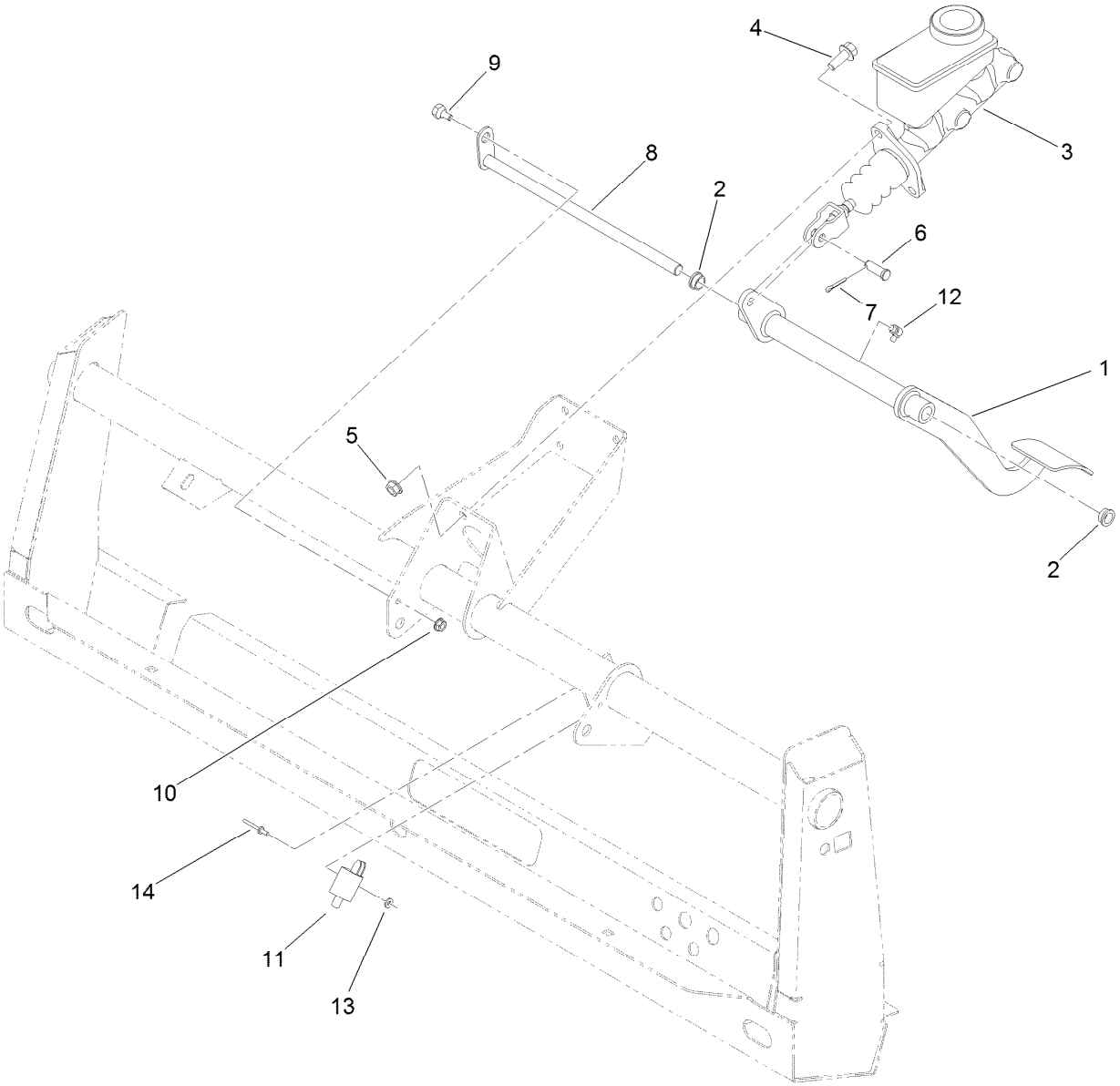

Master Cylinder and Brake Pedal Assembly

Ref.	*Part Number*	*Qty.*	*Description*
1	120-5023-03	1	Pedal-Brake
2	256-156	2	Bushing-Flange
3	104-6782	1	Master Cylinder ASM
4	3234-11	2	Screw-HHF
5	3290-357	2	Nut-HHF, Whiz
6	283-2	1	Pin-Clevis
7	3272-10	1	Pin-Cotter
8	106-2475	1	Shaft-Brake
9	63-3410	1	Screw-Shoulder
10	32128-33	1	Nut-HF
11	95-1653	1	Switch-Pole, Single
12	302-60	1	Fitting-Grease
13	3256-21	2	Washer-Flat
14	3269-25	2	Rivet-Pop

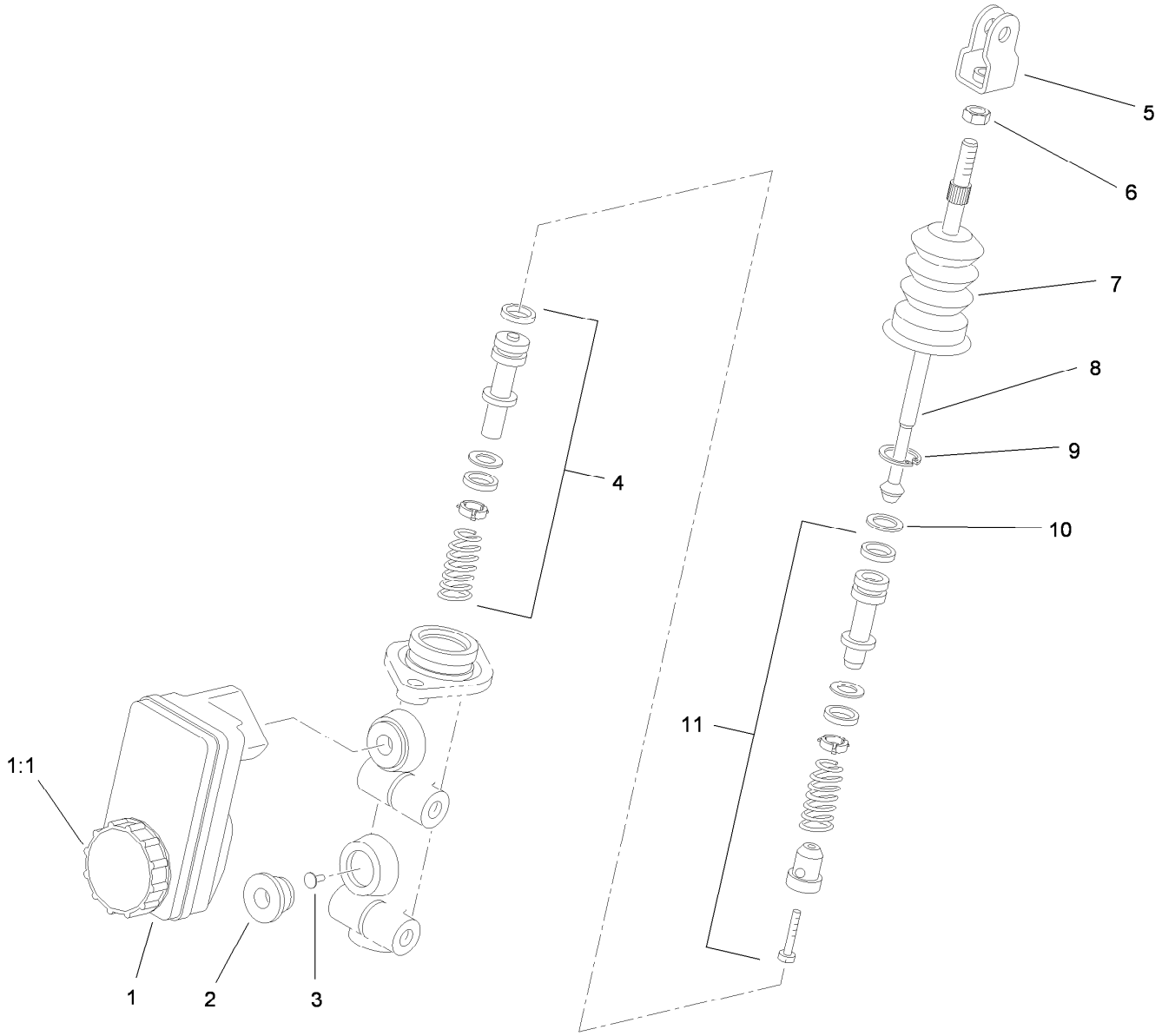

Master Cylinder Assembly No. 104-6782

Ref.	*Part Number*	*Qty.*	*Description*
1	104-6845	1	Reservoir ASM
1:1	92-4112	1	Cap ASM
2	93-8971	2	Seal-Port, Flange
3	92-4103	1	Pin-Stop
4	92-4102	1	Secondary Piston ASM
5	92-4110	1	Clevis
6	21-0360	1	Nut-Hex
7	94-5209	1	Cover-Dust
8	94-5210	1	Rod-Push
9	92-4109	1	Ring-Snap
10	92-4108	1	Retainer-Washer
11	92-4101	1	Primary Piston ASM

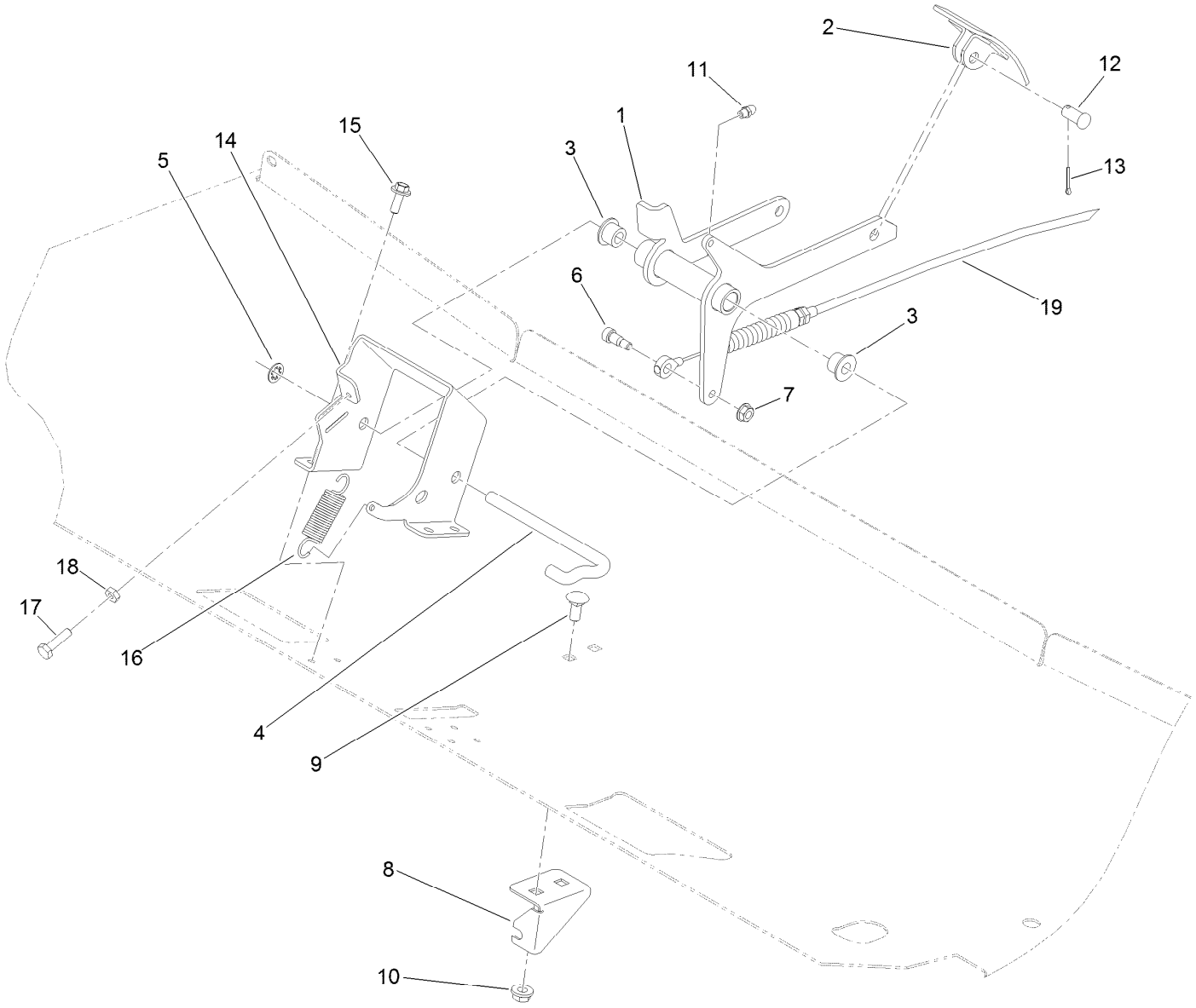

Accelerator Pedal Assembly

Ref.	Part Number	Qty.	Description
1	120-4983-03	1	Pedal-Accelerator
2	93-8969-03	1	Pedal
3	256-259	2	Bushing-Flange
4	87-2880	1	Shaft-Pedal, Accelerator
5	32151-56	1	Ring-Retaining, External
6	119-4881	1	Bolt-Shoulder
7	32128-33	1	Nut-HF
8	120-4982	1	Bracket-Mount, Cable
9	3230-1	2	Bolt-CARR
10	32128-20	2	Nut-HF

Ref.	Part Number	Qty.	Description
11	302-5	1	Fitting-Grease
12	283-85	1	Pin-Clevis
13	3272-6	1	Pin-Cotter
14	127-8625-03	1	Bracket-Mount, Pedal
15	46-6811	4	Screw-HWH
16	67-1450	1	Spring-Idler
17	321-6	1	Screw-HH
18	3218-1	1	Nut-Jam
19	121-9876	1	Cable-Accelerator

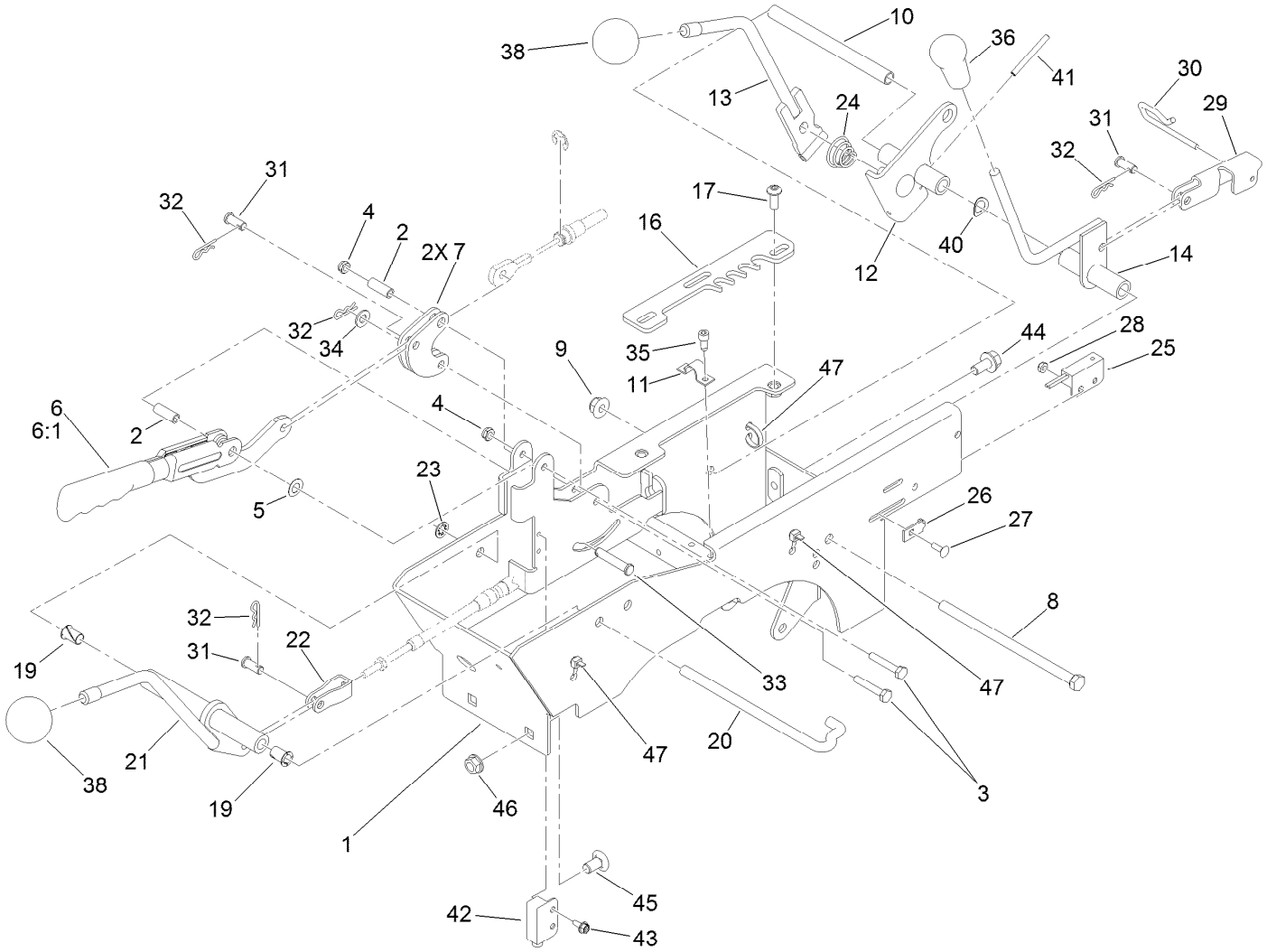

Center Console Assembly

Ref.	Part Number	Qty.	Description
1	121-9870-03	1	Support-Lever
2	114402	2	Spacer
3	321-9	2	Screw-HH
4	3296-56	2	Nut-Lock, NI
5	3290-477	1	Washer-Curved
6	127-8863	1	Lever-Brake, Park
6:1	127-8864	1	Grip-Handle
7	127-8603	2	Bellcrank-Brake, Park
8	323-36	1	Screw-HH
9	104-8301	1	Nut-HF, NI
10	106-7833	1	Spacer
11	116-1545	1	Clamp
12	121-9872	1	Lever-Pivot
13	121-9873	1	Lever-Control, Speed
14	121-9895	1	Lever-HYD
16	121-9851	1	Lever-Control, Speed (Detent)
17	3274-55	2	Screw-HSBH
19	52-2890	2	Bushing-Nylon
20	121-9869	1	Shaft-Lever, Shift
21	121-9868	1	Lever-Shift
22	87-2310	1	Clevis-Cable
23	32151-56	1	Ring-Retaining, External
24	87-2900	1	Spring-Compression
25	100-1270	1	Switch-Proximity
26	100-4872	1	Plate-Switch, Neutral
27	3229-34	1	Screw-CARR
28	3296-12	1	Nut-Lock, NI
29	115-2250	1	Link
30	115-2350	1	Pin-Retainer
31	283-62	3	Pin-Clevis
32	3290-307	4	Pin-Cotter
33	94-3829	1	Pin-Clevis
34	3256-23	1	Washer-Plain
35	65-5220	2	Screw-HSH, Thread Forming
36	106-7903	1	Knob-Control
38	233-48	2	Knob
40	3290-221	1	Washer-Spring
41	32121-48	1	Pin-Spring
42	104-1414	1	Sensor-Proximity, Ferrous (NC)

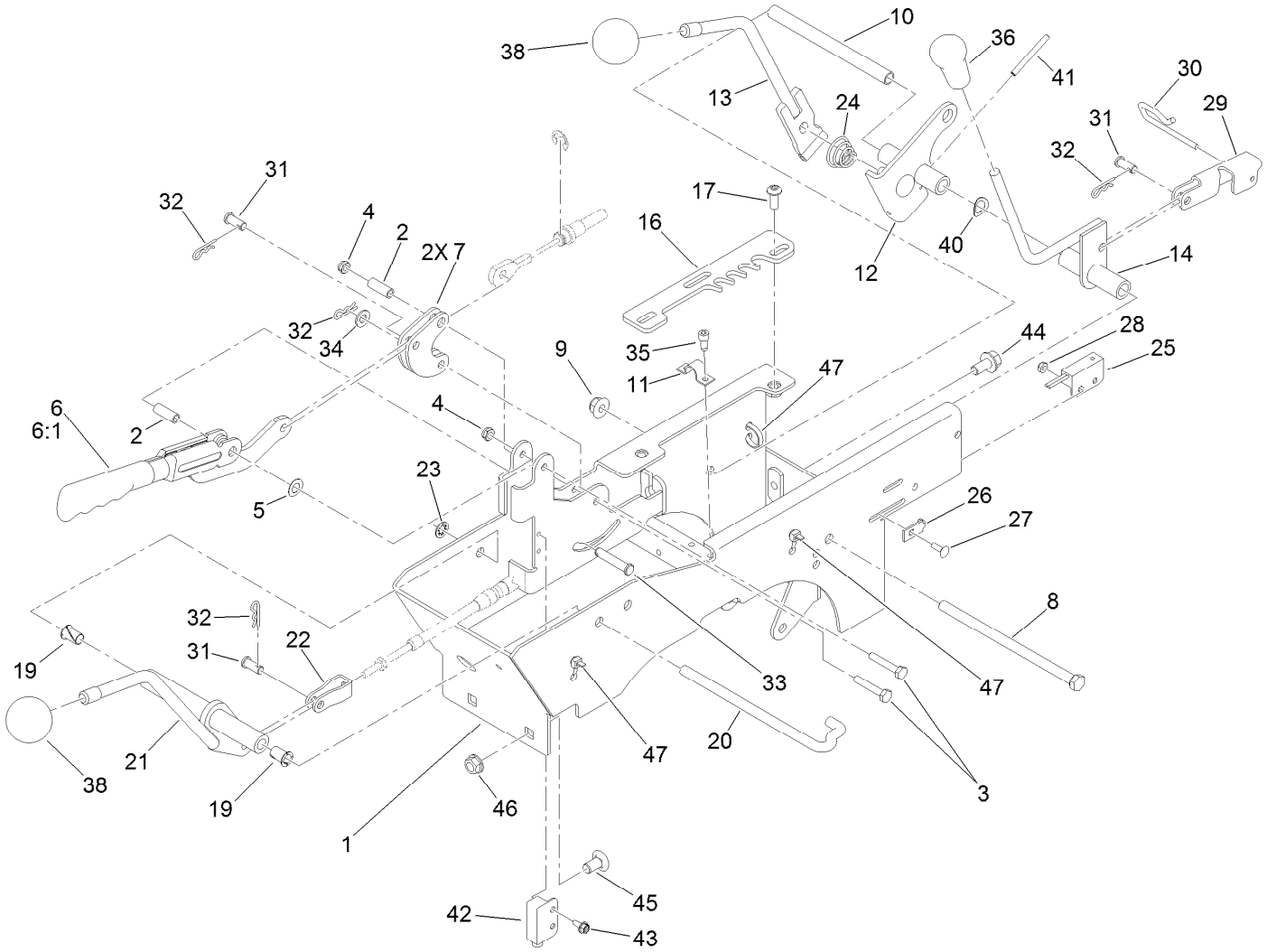

Center Console Assembly (continued)

Ref.	Part Number	Qty.	Description
43	32104-60	2	Screw-HWH
44	3234-12	2	Screw-HHF
45	3231-21	2	Screw-CARR
46	3290-357	2	Nut-HHF, Whiz
47	3290-379	3	Tie-Cable

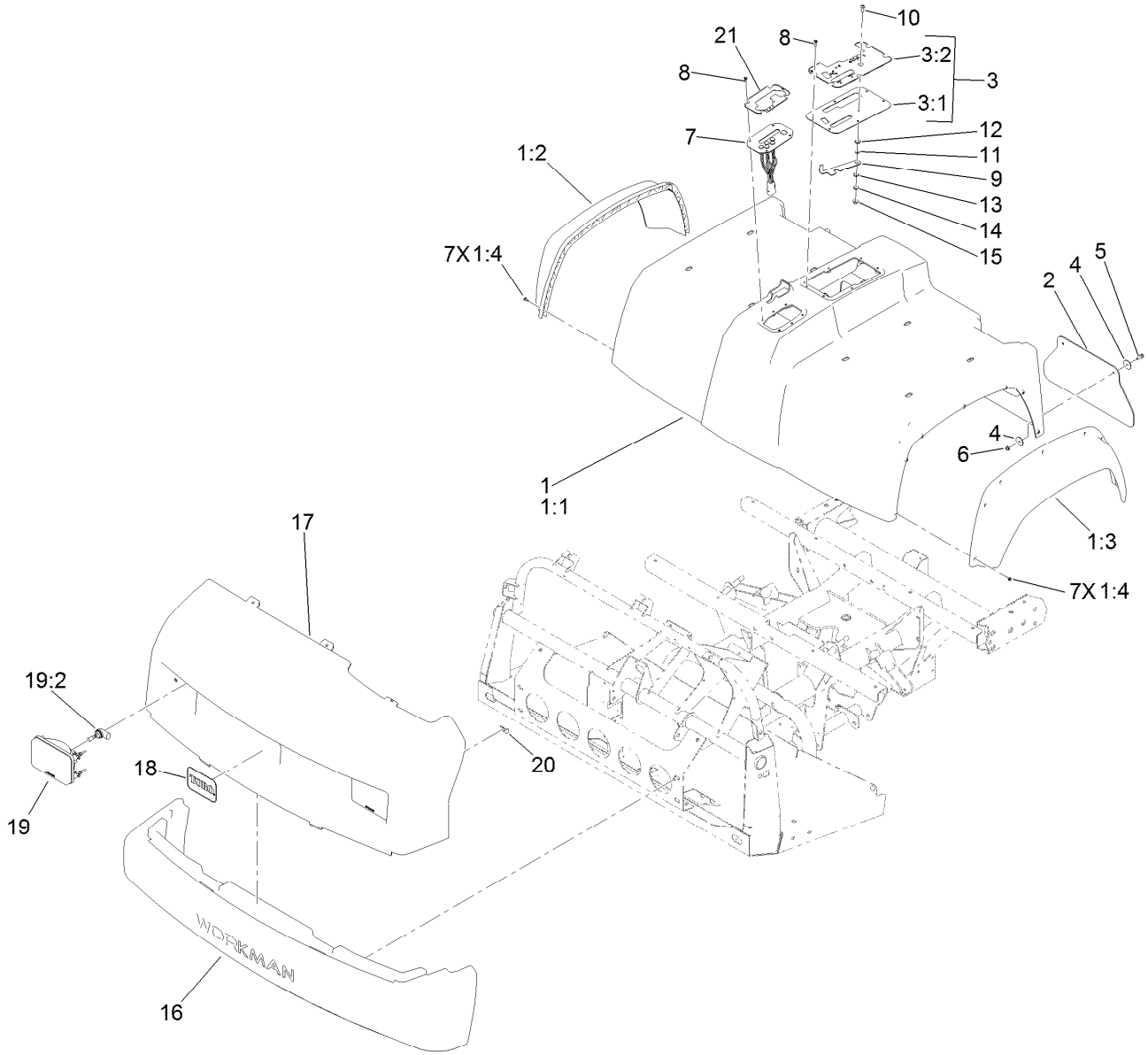

Bumper, Hood and Seat Base Assembly

Ref.	Part Number	Qty.	Description
1	115-7815	1	Seat Base ASM
1:1		1	Base-Seat ●
1:2	114-8407	1	Fender-Front, RH
1:3	114-8408	1	Fender-Front, LH
1:4	117-5036	14	Screw-HWH
2	106-2378	2	Mudflap
3		1	Control Plate ASM ●
3:1	121-9737-03	1	Plate-Control
3:2	121-9890	1	Decal-Console
4	3256-55	8	Washer-Flat
5	3234-4	4	Screw-HHF
6	104-7201	4	Nut-HF
7	127-8865	1	Shift Indicator ASM
8	98-1375	10	Screw-HWH

Ref.	Part Number	Qty.	Description
9	106-7984	1	Lever-Detent
10	3274-55	1	Screw-HSBH
11	82-4240	1	Spacer-Bearing
12	94-8196	1	Washer-Nylon
13	3290-221	1	Washer-Spring
14	3256-23	1	Washer-Plain
15	104-8300	1	Nut-HF, NI
16	112-3185	1	Bumper
17	112-3183	1	Hood
18	117-4950	1	Decal
19	114-8322	2	Headlight ASM
19:2	115-2395	1	Bulb-Light
20	114-8341	6	Clip-Speed
21	127-8760	1	Decal-Indicator, Shift

● Not serviced separately

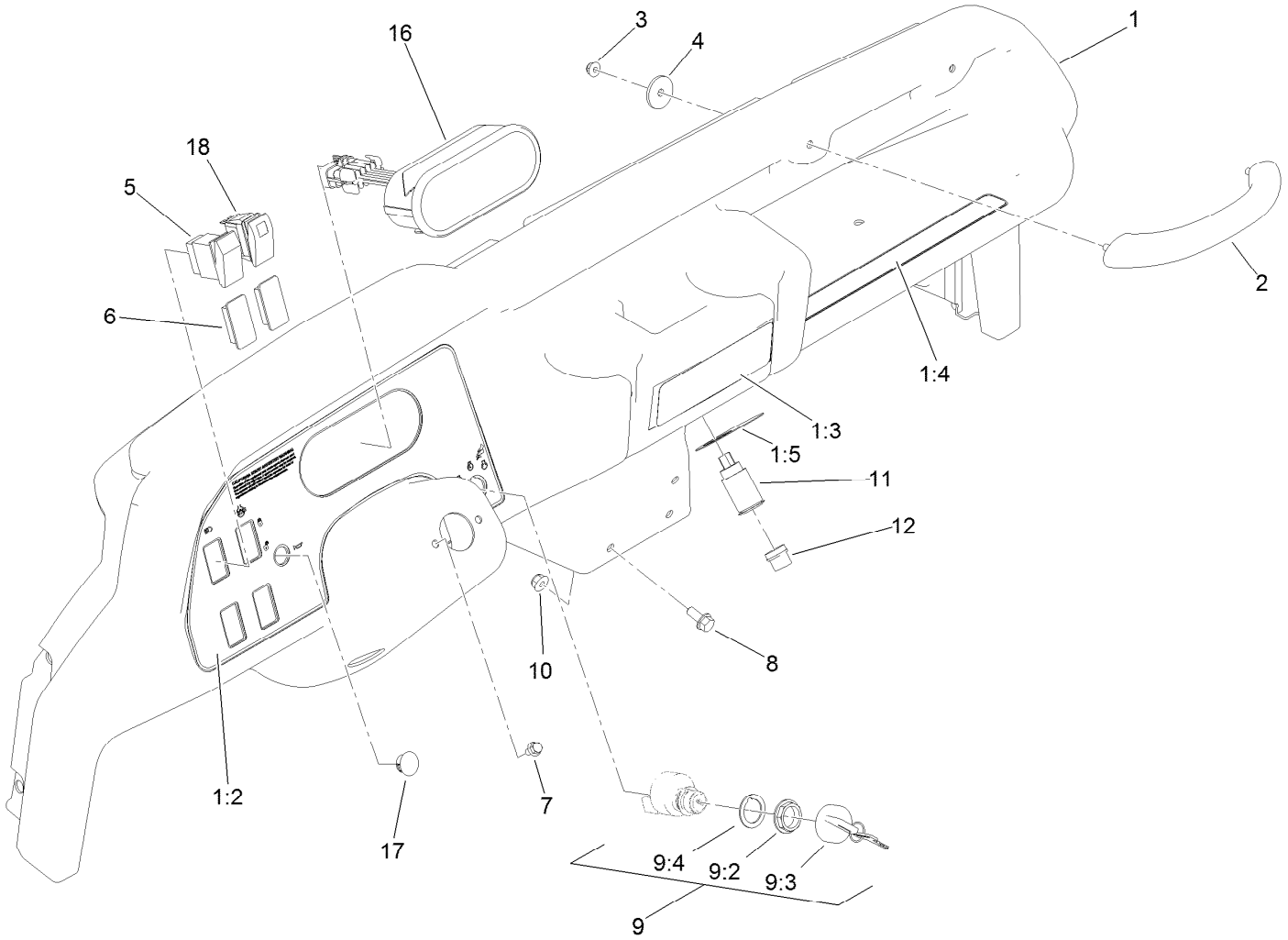

Dash Assembly

Ref.	Part Number	Qty.	Description
1	127-8621	1	Dash ASM
1:2	127-8620	1	Decal-Dash
1:3	115-7746	1	Decal-Danger
1:4	115-2282	1	Decal-Warning, Dash
1:5	106-2353	1	Decal-Powerpoint
2	117-4948	1	Handle-Grab
3	104-7201	2	Nut-HF
4	103995	2	Washer
5	95-8999	1	Switch
6	99-7420	2	Plug-Hole
7	33103-012	2	Screw-HHF

Ref.	Part Number	Qty.	Description
8	3234-5	3	Screw-HHF
9	106-5269	1	Ignition Switch ASM
9:2	108-8660	1	Nut-Mounting
9:3	106-5270	1	Ignition Key Set
9:4	108-8659	1	Washer-Backup
10	104-8300	3	Nut-HF, NI
11	99-7411	1	Point-Power
12	99-7416	1	Cap
16	121-9849	1	Cluster-Instrument (Auto)
17	94-5627	1	Plug
18	105-4232	1	Switch

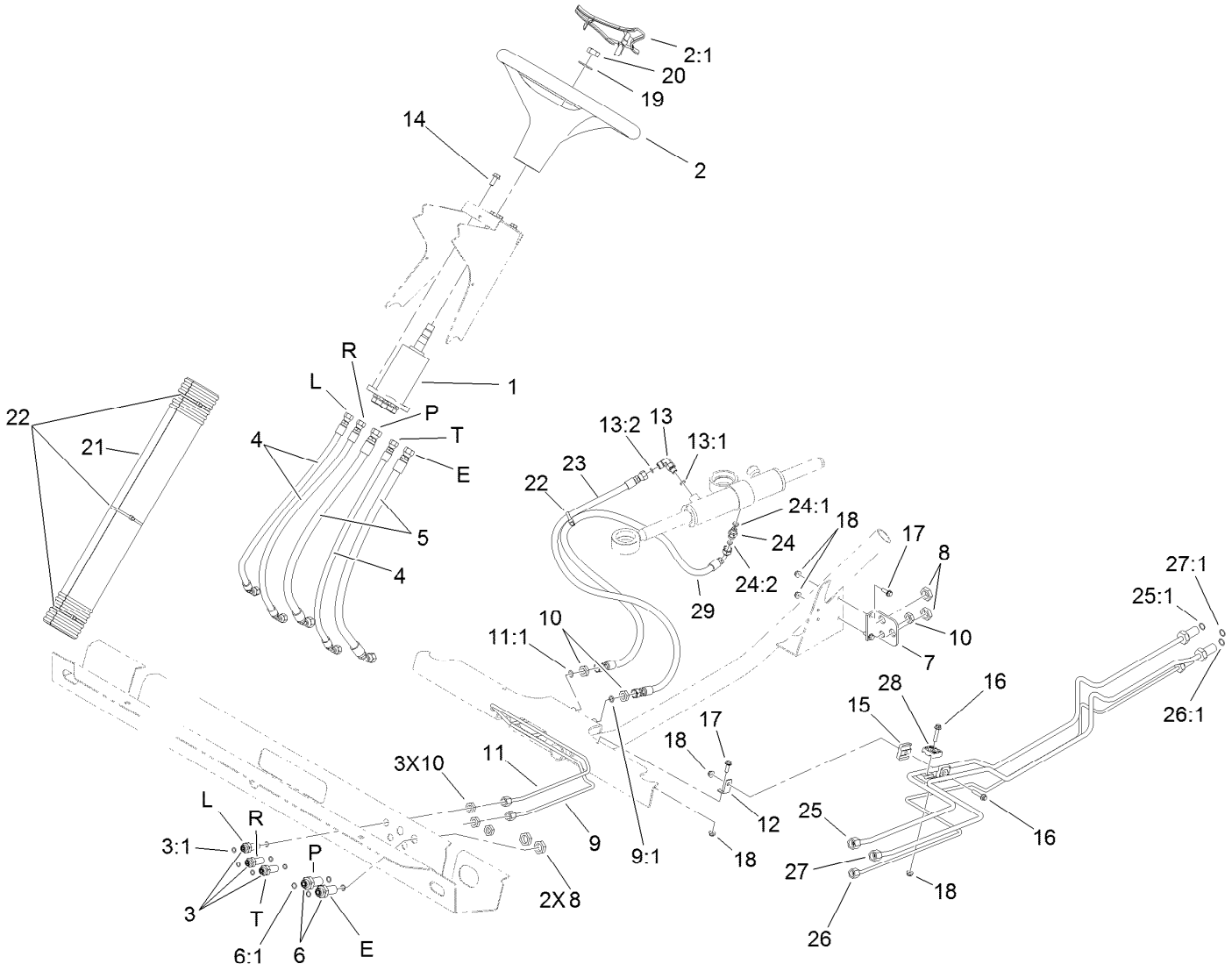

Steering Hydraulic Assembly

Ref.	Part Number	Qty.	Description
1	120-4813	1	Pump-Steering
2	98-1471	1	Wheel-Steering
2:1	98-1468	1	Cover-Wheel, Steering
3	94-1444	3	Union-Bulkhead
3:1	237-21	2	O-Ring
4	106-7974	3	Hose-HYD
5	106-7975	2	Hose-HYD
6	340-71	2	Fitting-Straight, Bulkhead
6:1	237-22	2	O-Ring
7	106-7801-03	1	Bracket-Line, Steering
8	340-70	4	Nut-Lock
9	106-7804	1	Tube-HYD
9:1	237-21	1	O-Ring
10	3219-10	6	Nut-Hex
11	106-7806	1	Tube-HYD
11:1	237-21	1	O-Ring
12	106-7807	1	Bracket-Line, Steering
13	340-132	1	Fitting-Elbow, 90
13:1	237-78	1	O-Ring
13:2	237-21	1	O-Ring
14	98-7977	4	Screw-HHF

Ref.	Part Number	Qty.	Description
15	106-7839	2	Clamp-Tube
16	3234-21	2	Screw-HHF
17	3234-4	3	Screw-HHF
18	104-7201	5	Nut-HF
19	3256-27	1	Washer-Flat
20	3296-33	1	Nut-Lock, NI
21	106-6713	1	Cover-Lines, Steering
22	3290-379	4	Tie-Cable
23	108-6505	1	Hose-HYD
24	340-92	1	Fitting-Straight
24:1	237-78	1	O-Ring
24:2	237-21	1	O-Ring
25	115-7701	1	Tube-HYD
25:1	237-22	1	O-Ring
26	115-7702	1	Tube-HYD
26:1	237-22	1	O-Ring
27	115-7703	1	Tube-HYD
27:1	237-21	1	O-Ring
28	56-7973	2	Clamp-Tube
29	117-4861	1	Hose-HYD

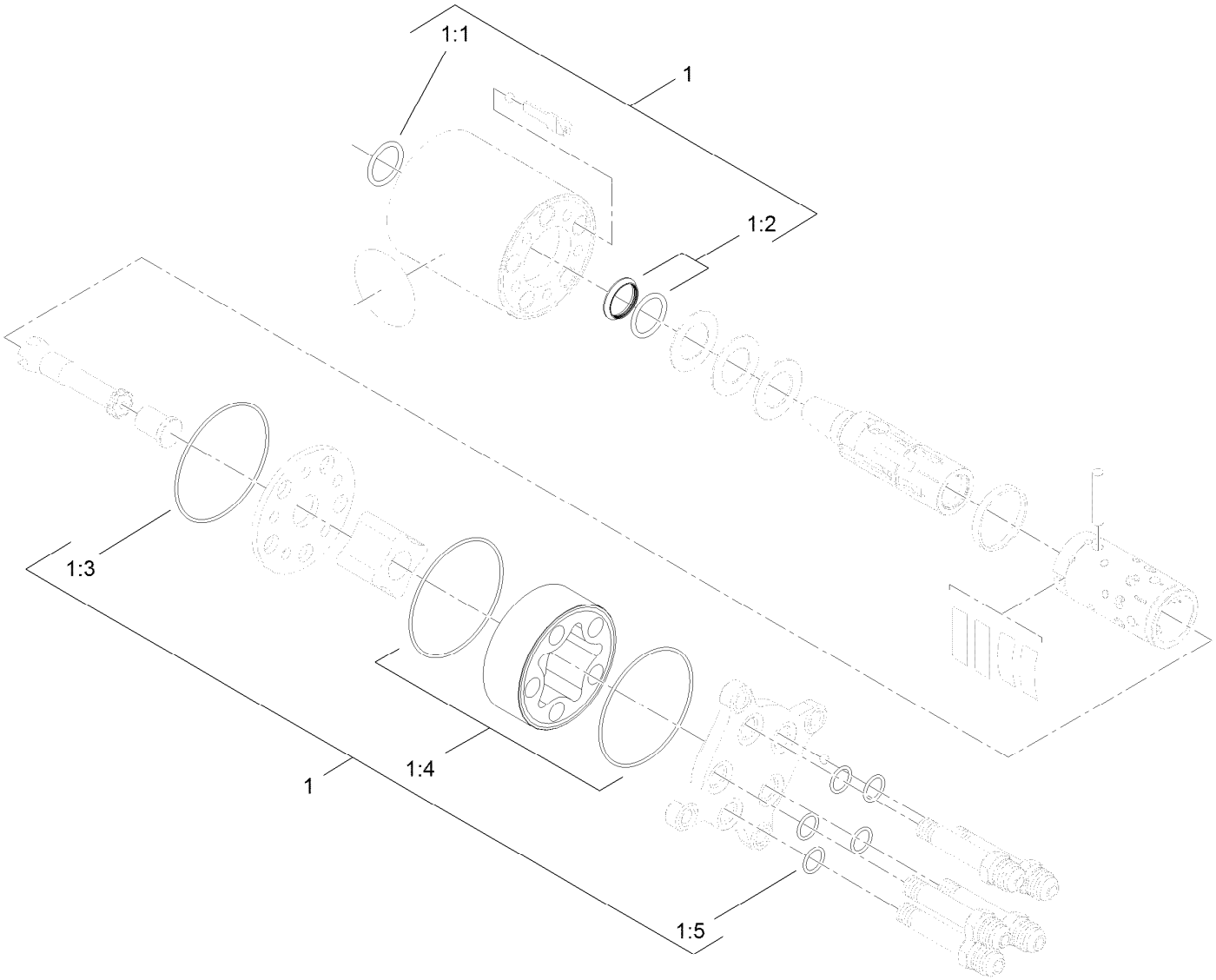

Steering Valve Assembly No. 120-4813

Ref.	*Part Number*	*Qty.*	*Description*
1	106-6716	1	Seal Kit
1:1		1	Ring-Seal, Dust ●
1:2		1	Seal-Shaft ●
1:3		1	O-Ring ●
1:4		2	O-Ring ●
1:5		5	O-Ring ●

● Not serviced separately

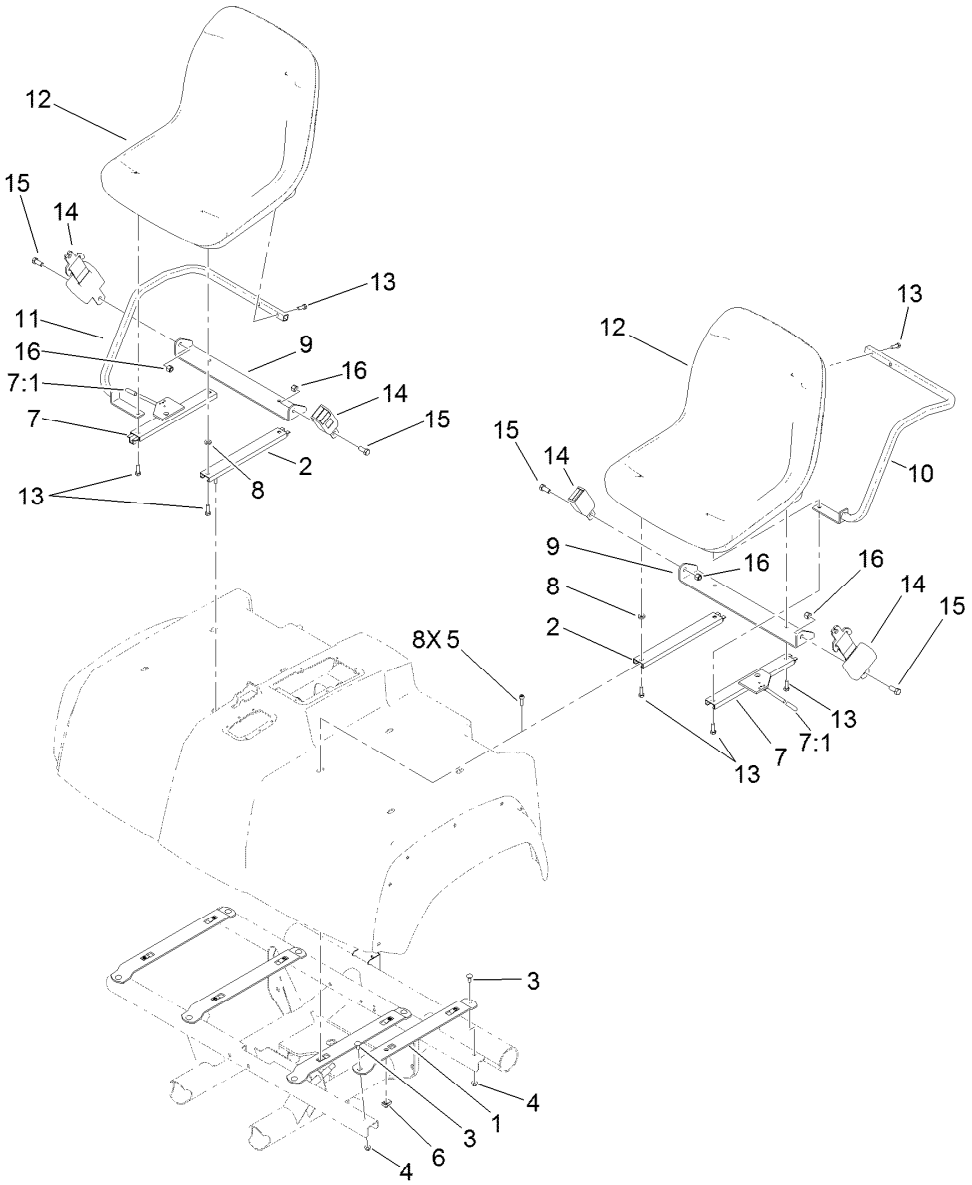

Seat Assembly

Ref.	Part Number	Qty.	Description
1	115-2435-03	4	Bracket-Seat
2	119-0655	2	Adjuster-Seat, Non Locking
3	3230-1	8	Bolt-CARR
4	104-8300	8	Nut-HF, NI
5	3274-22	8	Screw-HSH
6	115-7721	8	Nut-Clip, U
7	121-9763	2	Adjuster-Seat, Locking
7:1	2410-49	1	Cap-Vinyl
8	104-7658	2	Spacer

Ref.	Part Number	Qty.	Description
9	119-0727-03	2	Bracket-Belt, Seat
10	119-0731-03	1	Armrest-LH
11	119-0732-03	1	Armrest-RH
12	112-2923	2	Seat ASM
13	33114-030	12	Screw-HH
14	110-0413	2	Seatbelt-Retractable
15	3212-4	4	Screw-HH
16	3296-7	4	Nut-Lock

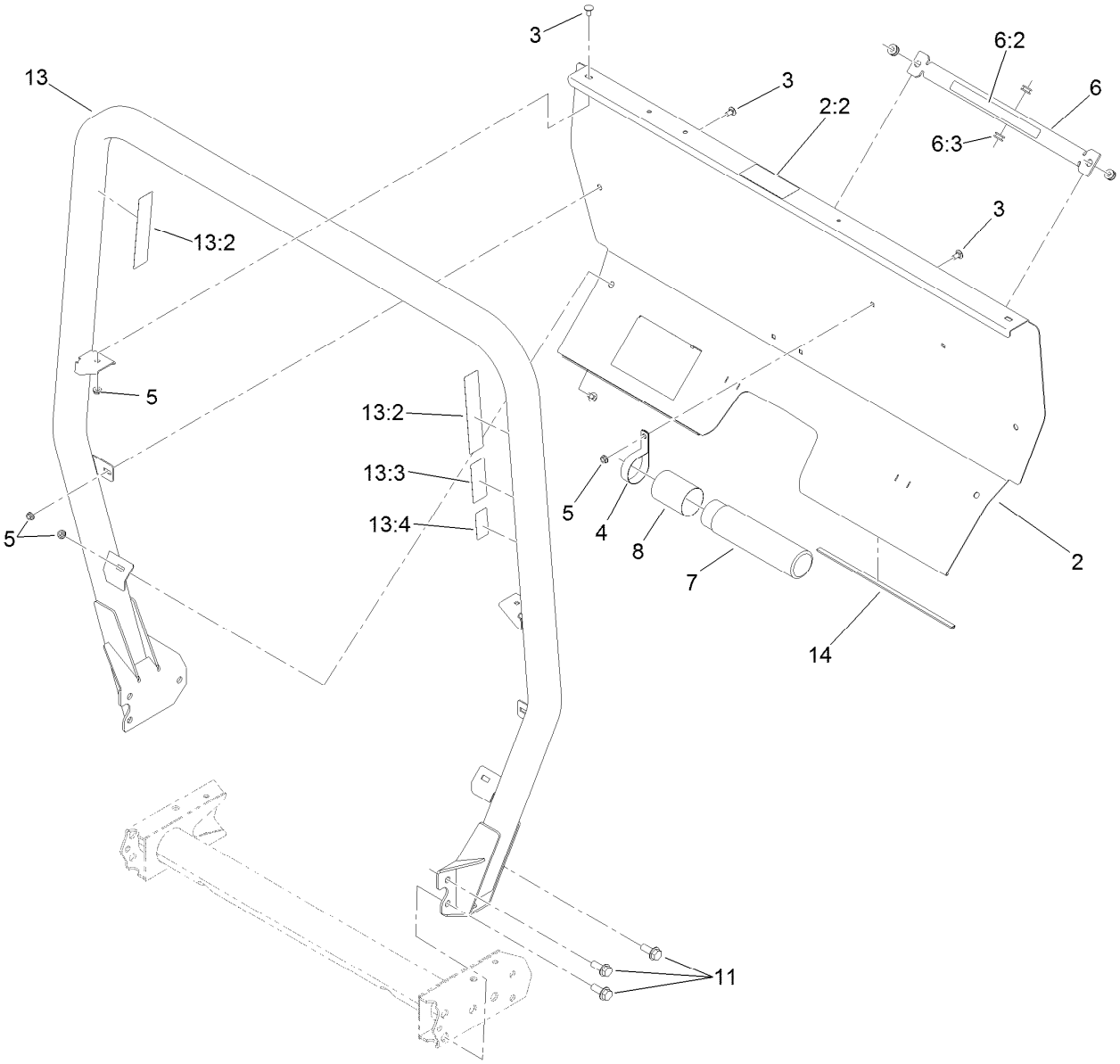

Roll-Over Protection System Assembly

Ref.	Part Number	Qty.	Description
2	121-9857	1	ROPS Cover ASM (W/Decal)
2:2	105-4215	1	Decal-Caution
3	3230-18	8	Screw-CARR
4	2412-133	2	Clamp-R
5	32128-20	8	Nut-HF
6	105-7960	1	Bed Support ASM
6:2	93-9852	1	Decal-Warning
6:3	92-5972	4	Grommet-Rubber

Ref.	Part Number	Qty.	Description
7	104-7050	1	Tube-Manual
8	104-7048	1	Cap-Housing
11	3234-38	6	Screw-HHF
13	115-7910	1	ROPS ASM
13:2	106-7767	2	Decal-ROPS
13:3	93-9850	1	Decal-ROPS, CE
13:4	117-4969	1	Decal-ROPS, ISO
14	127-7382	2	Seal-ROPS

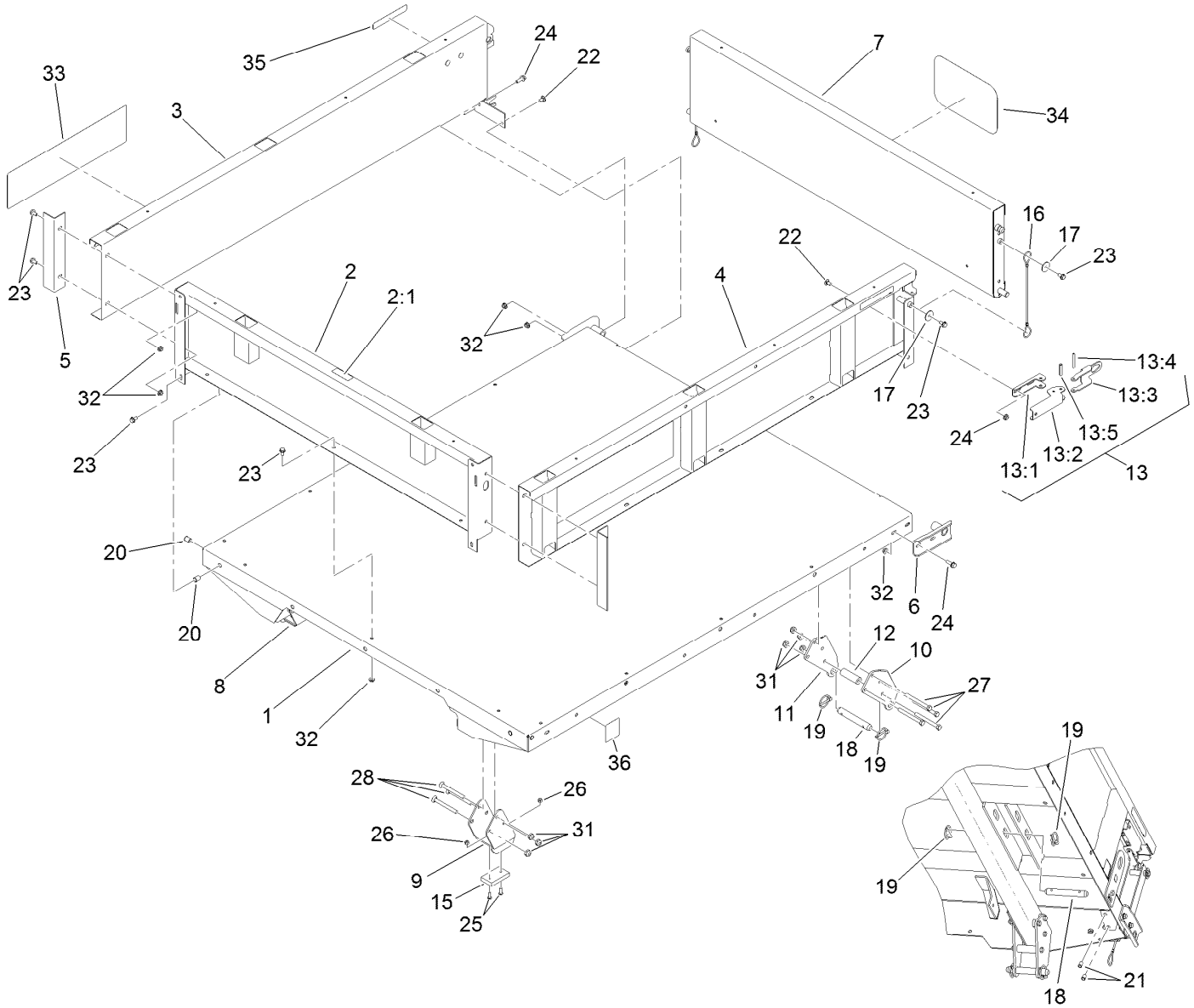

Full Bed and Side Panel Assembly

Ref.	Part Number	Qty.	Description
1	93-9724-03	1	Flatbed-Full
2	92-5982	1	Front Panel ASM
2:1	115-7739	1	Decal-No Riders
3	92-1255-03	1	Panel-Side, RH
4	92-1248-03	1	Panel-Side, LH
5	92-1320-03	2	Angle-Side
6	92-1265-03	2	Bracket-Pivot
7	92-1259-03	1	Tailgate-Rear
8	106-2423-03	1	Bracket-Spacer, RH
9	106-2422-03	1	Bracket-Spacer, LH
10	93-9720-03	2	Bracket-Pivot, Long (LH)
11	93-9721-03	2	Bracket-Pivot, Long (RH)
12	93-9575	2	Tube-Pivot, Flatbed
13	99-1123	2	Latch ASM
13:1	92-1271	1	Pivot-Latch
13:2	99-1113	1	Handle-Latch
13:3	99-1112	1	Plate-Retainer
13:4	32121-78	1	Pin-Roll
13:5	32121-25	1	Pin-Roll
15	93-9719	2	Block-Wear

Ref.	Part Number	Qty.	Description
16	93-9595	2	Lanyard
17	3256-57	4	Washer-Flat
18	92-1233	4	Pin-Clevis
19	92-1298	8	Pin-Lynch
20	32148-7	4	Nut-Insert
21	32148-6	4	Insert-Nut
22	3230-18	6	Screw-CARR
23	3234-7	21	Screw-HHF
24	3234-29	6	Screw-HHF
25	3250-45	4	Screw-SPH
26	3296-42	4	Nut-Lock, NI
27	323-42	8	Screw-HH
28	3231-24	6	Screw-CARR
31	3296-44	14	Nut-Lock, NI
32	32128-20	27	Nut-HF
33	127-8624	2	Decal-Workman, HD (Auto)
34	105-4222	1	Decal
35	93-9868	2	Decal-Caution
36	93-9899	2	Decal-Warning

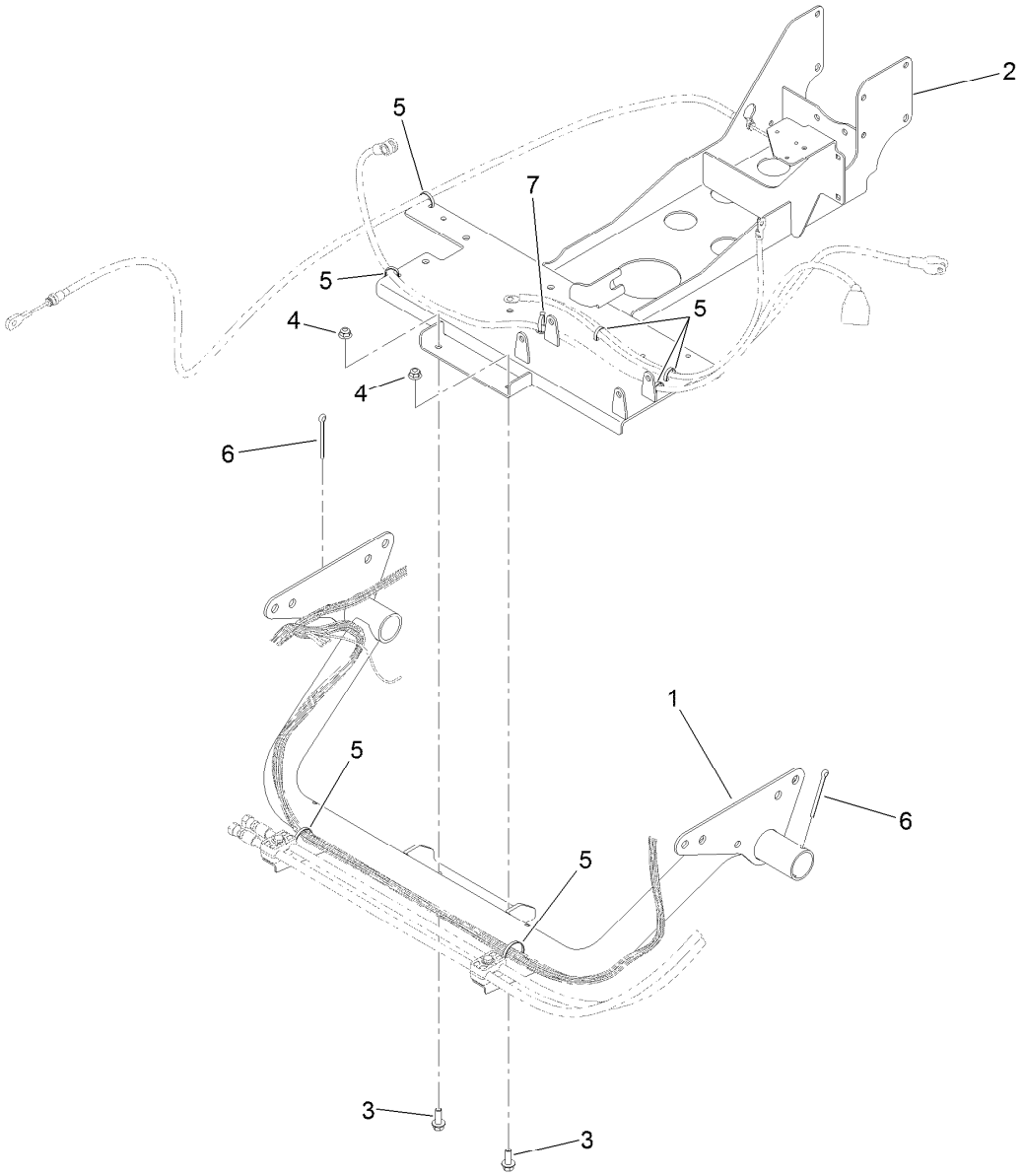

Engine and Transmission Support Assembly

Ref.	*Part Number*	*Qty.*	*Description*
1	121-9750-03	1	Support-Engine
2	121-9801-03	1	Mount-Engine/Transmission
3	3234-11	2	Screw-HHF
4	104-8301	2	Nut-HF, NI
5	3290-379	7	Tie-Cable
6	3272-37	2	Pin-Cotter
7	32180-030	1	Clip-Tie

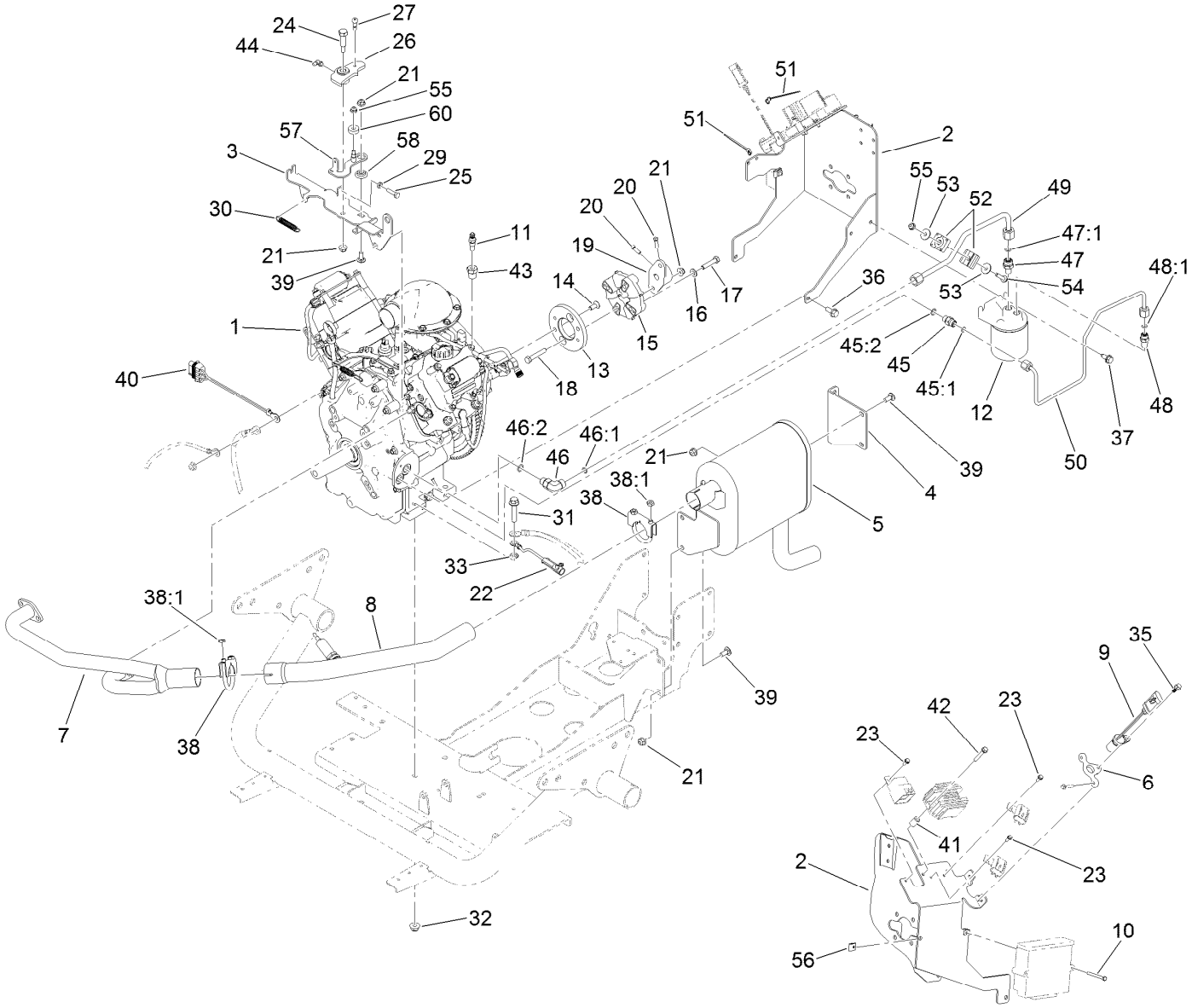

Engine and Exhaust Assembly

Ref.	Part Number	Qty.	Description
1	121-9743	1	Engine-Kohler, LH775 ■
1:1	108-3847	1	Filter-Oil ●
2	127-8809-03	1	Mount-Pump
3	131-6680	1	Bracket-Throttle
4	121-9831-03	1	Bracket-Muffler
5	121-9830	1	Muffler ASM
6	121-9850	1	Mount-Sensor, Tach
7	121-9829	1	Manifold-Exhaust
8	121-9828	1	Pipe-Exhaust, Intermediate
9	120-4800	1	Sensor-Geartooth
10	32105-20	2	Screw-HH
11	94-7621	1	Sender-Temperature
12	127-8714	1	Adapter-Filter, Remote
13	121-9714	1	Adapter-Coupler, Pump
14	100-8159	2	Screw-HSFH
15	119-0652	1	Coupler-Rubber
16	3256-23	2	Washer-Plain
17	322-7	2	Screw-HH
18	322-21	2	Screw-HH
19	115-2169	1	Hub-Pump
20	3241-6	2	Screw-SQH
21	104-8300	8	Nut-HF, NI
22	117-5612	1	Harness-Wire, Ground
23	32144-112	3	Screw-HWH
24	7-0030	1	Screw-Shoulder, HH
25	329-6	1	Screw-HH
26	131-6678	1	Bellcrank ASM
27	119-4881	1	Bolt-Shoulder
29	3220-1	1	Nut-Jam
30	112-1542	1	Spring-Extension
31	3234-19	4	Screw-HHF
32	104-8301	4	Nut-HF, NI
33	3255-9	1	Washer-Lock
35	99-6810	1	Screw-HHF
36	33104-020	2	Screw-HHF
37	32144-70	2	Screw-HWHTF

● Not illustrated

■ Obtain parts from www.kohlerplus.com

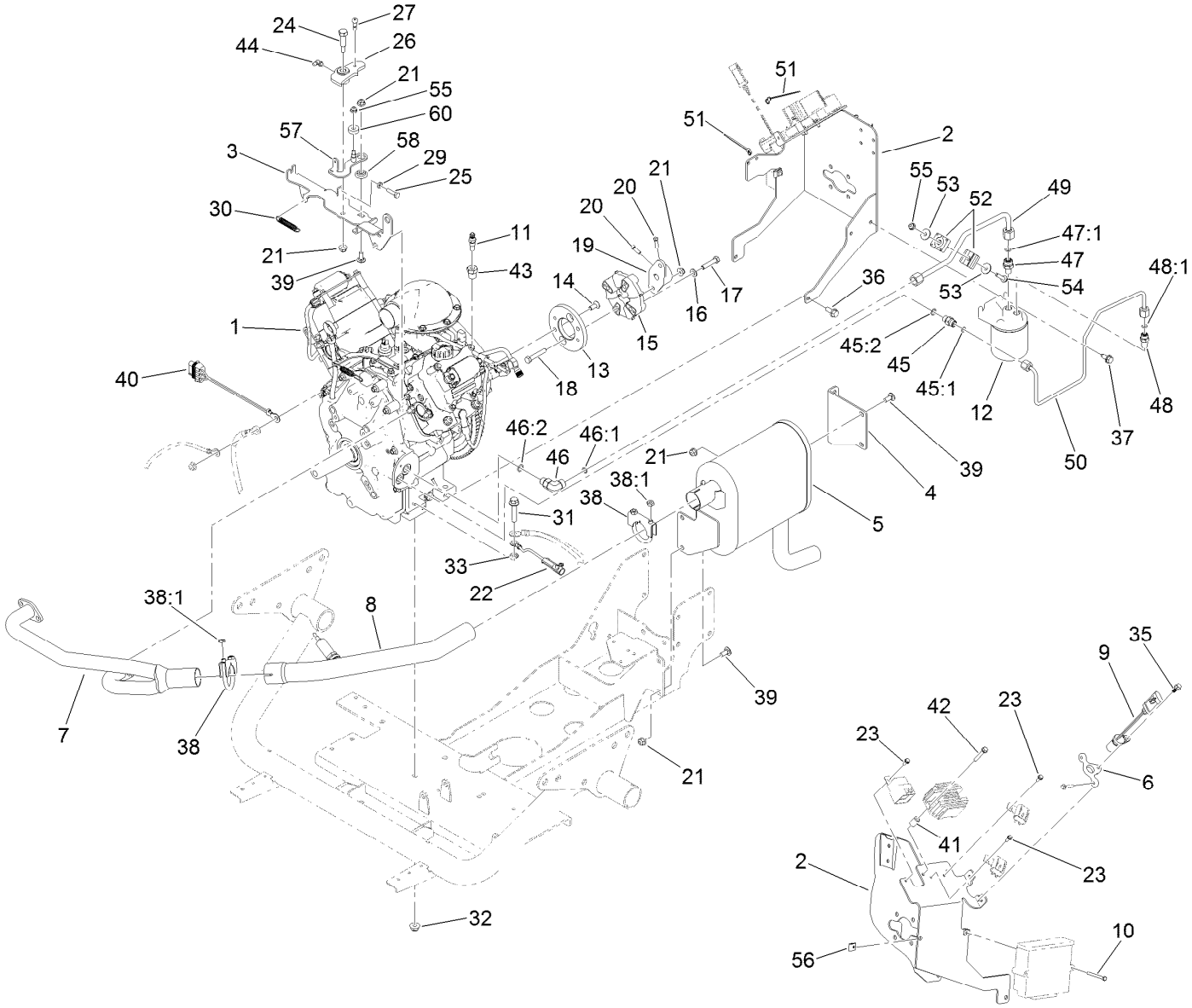

Engine and Exhaust Assembly (continued)

Ref.	Part Number	Qty.	Description
38	2112-9	2	Clamp
38:1	32128-20	2	Nut-HF
39	3230-23	5	Screw-CARR
40	99-3441	1	Harness-Wire, Fusible Link
41	120-9636	2	Spacer
42	94-2691	2	Screw-HWH
43	121-9894	1	Fitting-Straight
44	302-40	1	Fitting-Grease, 90 DEG
45	127-8706	1	Fitting-STR
45:1	127-8710	1	O-Ring
45:2	127-8711	1	O-Ring
46	127-8709	1	Fitting-90
46:1	127-8712	1	O-Ring
46:2	127-8713	1	O-Ring
47	127-8707	1	Fitting-STR

Ref.	Part Number	Qty.	Description
47:1	127-8712	1	O-Ring
48	127-8708	1	Fitting-STR
48:1	127-8710	1	O-Ring
49	127-8619	1	Tube-HYD
50	127-8618	1	Tube-HYD
51	3290-381	3	Tie-Cable
52	106-7839	2	Clamp-Tube
53	87-6630	2	Washer-Plain
54	3234-21	1	Screw-HHF
55	104-7201	2	Nut-HF
56	120-6686	2	Nut-Clip, U
57	131-6679	1	Lever-Throttle
58	75-8700	1	Bushing-Idler
60	251-259	1	Bearing-Ball

● Not illustrated

■ Obtain parts from www.kohlerplus.com

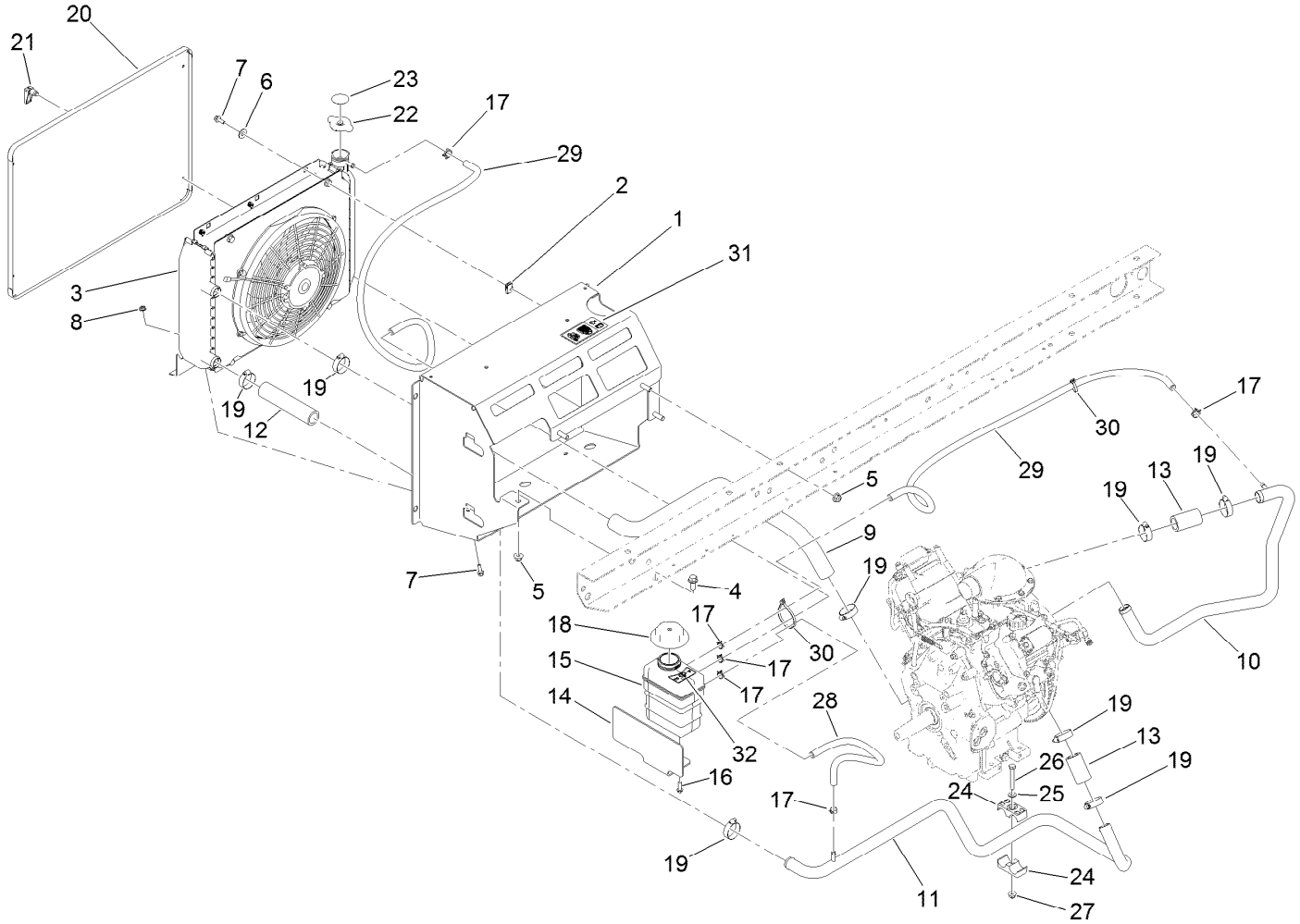

Cooling System Assembly

Ref.	Part Number	Qty.	Description
1	115-2434	1	Mount-Radiator
2	107069	2	Clip
3		1	Radiator And Fan ASM ●
4	3234-11	1	Screw-HHF
5	104-8301	4	Nut-HF, NI
6	3256-3	2	Washer-Flat
7	3234-4	4	Screw-HHF
8	32128-33	2	Nut-HF
9	121-9818	1	Hose-Coolant, Upper
10	121-9819	1	Hot Coolant Pipe ASM
11	121-9820	1	Cold Coolant Pipe ASM
12	127-8634	1	Hose-Straight
13	119-9711	2	Hose-Straight
14	121-9854-03	1	Plate Mount-Tank
15	120-4856	1	Tank-Surge
16	46-8091	2	Screw-HWH
17	92-2379	6	Clamp-Hose
18	120-4867	1	Cap-Coolant, Threaded (15 PSI)
19	2412-34	8	Clamp-Hose
20	115-2428-03	1	Screen-Radiator
21	74-5950	4	Latch-Swell
22	120-4866	1	Cap-System, Cooling
23	106-6755	1	Decal-Cap, Radiator
24	56-7974	2	Clamp-Tube
25	3256-23	1	Washer-Plain
26	322-11	1	Screw-HH
27	104-8300	1	Nut-HF, NI
28	127-8608	1	Hose-Coolant
29	120-5021	2	Hose-Coolant
30	3290-379	2	Tie-Cable
31	121-6286	1	Decal-Fill, Radiator
32	121-6287	1	Decal-Tank, Overflow

● Not serviced separately

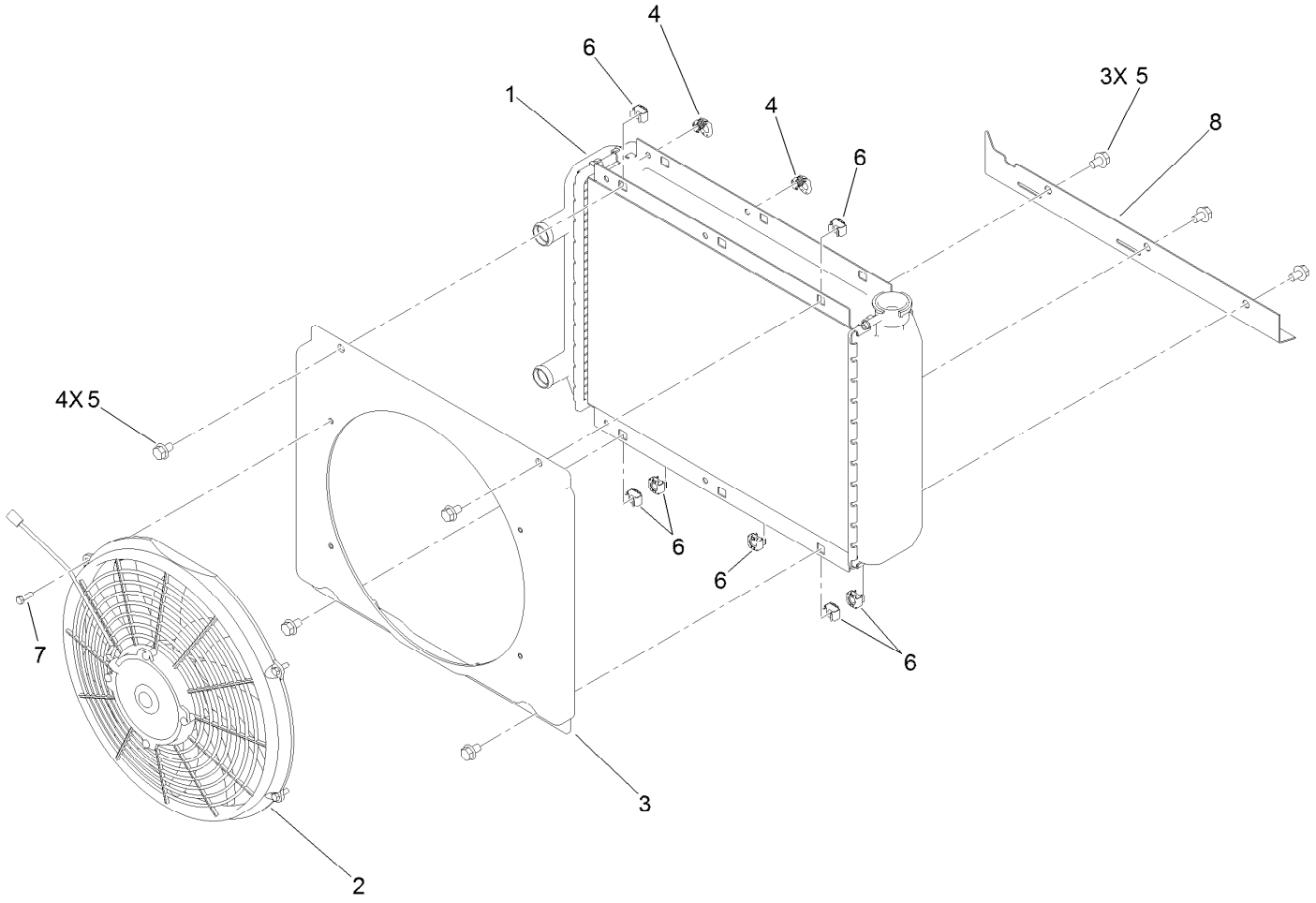

Radiator and Fan Assembly

Ref.	Part Number	Qty.	Description
1	114-8384	1	Radiator
2	121-9812	1	Fan-Electric
3	114-8386	1	Shroud
4	114-8387	2	Latch-Spring
5	3234-30	7	Screw-HHF
6	703856	7	Nut-Sq, Caged
7	60-6910	4	Screw-HH
8	115-7765	1	Plate-Mount, Lower

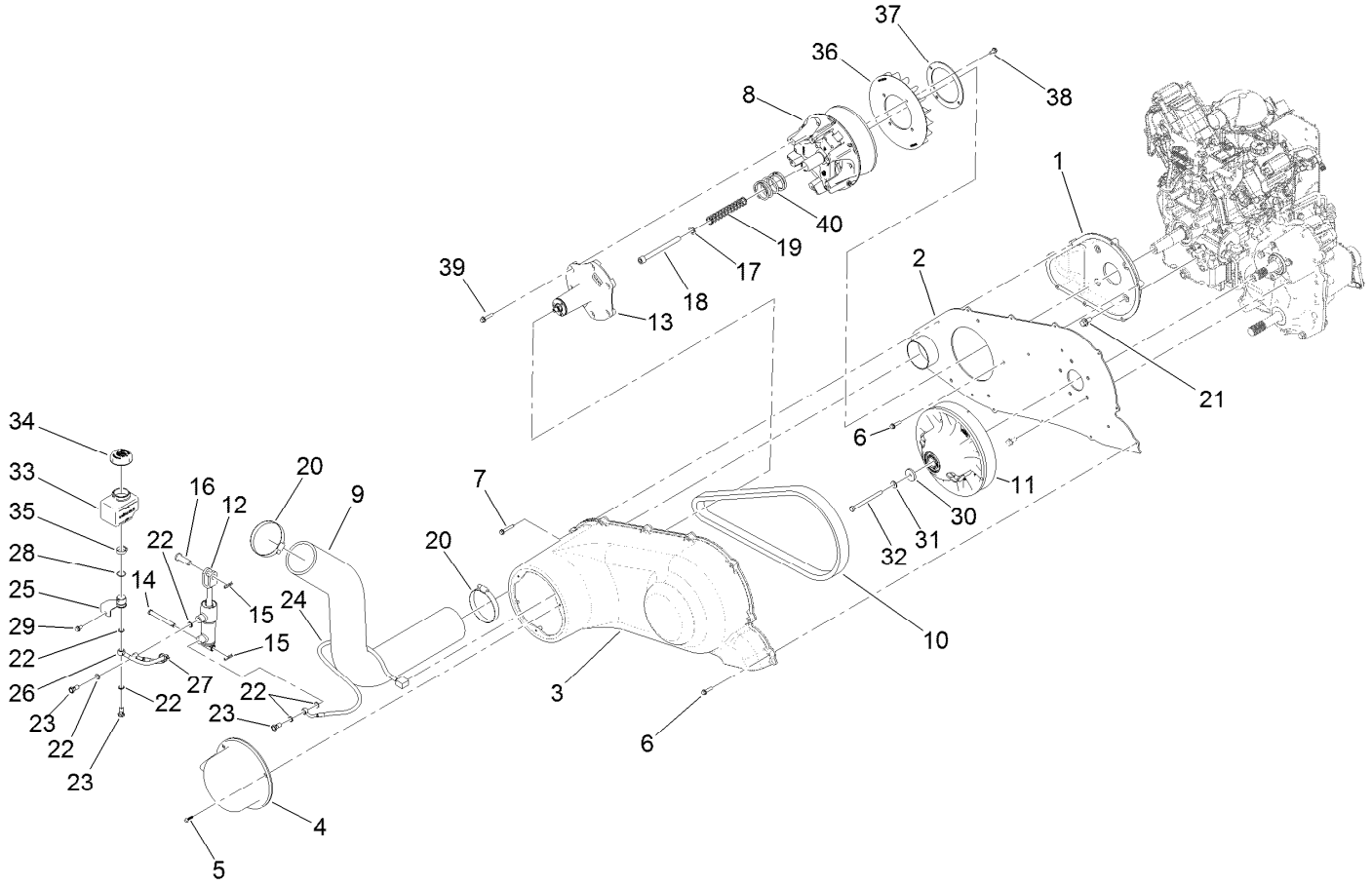

Clutch Assembly

Ref.	Part Number	Qty.	Description
1	121-9838	1	Housing-Inlet, Air
2	121-9815-03	1	Spanner Plate ASM
3	121-9836	1	Cover-Enclosure
4	121-9837	1	Cover-Limiter, Speed
5	121-9102	3	Screw-HWH
6	32144-86	14	Screw-HWHTF
7	94-2691	2	Screw-HWH
8	121-9739	1	Clutch-Primary
9	121-9853	1	Hose-Intake
10	121-9612	1	Belt
11	121-9740	1	Clutch-Secondary
12	121-9844	1	Cylinder-Master
13		1	Speed Limiter Cover ASM ●
14	80-2570	1	Pin-Clevis
15	3290-307	2	Pin-Cotter
16	117-5094	1	Pin-Clevis
17	41-8440	1	Washer
18	121-9848	1	Screw-HSH
19	121-9847	1	Spring-Compression
20	2412-125	2	Clamp-Hose
21	3234-1	4	Screw-HHF
22	115-2341	6	Washer-Banjo
23	115-2340	3	Bolt-Banjo
24	121-9846	1	Speed Control Hose ASM
25	121-9899	1	Reservoir Fitting ASM
26	121-9897	1	Hose-Reservoir
27	3290-379	1	Tie-Cable
28	237-58	1	O-Ring
29	32144-4	1	Screw-HWH
30	104-6550	1	Washer-Clutch
31	87-8640	1	Washer-Flat
32	127-8716	1	Screw-HH, Lock
33	127-8622	1	Reservoir-Fluid
34	127-8623	1	Cap-Reservoir
35	2412-141	1	Clamp-Drive, Worm
36	121-9840	1	Fan

● Not serviced separately

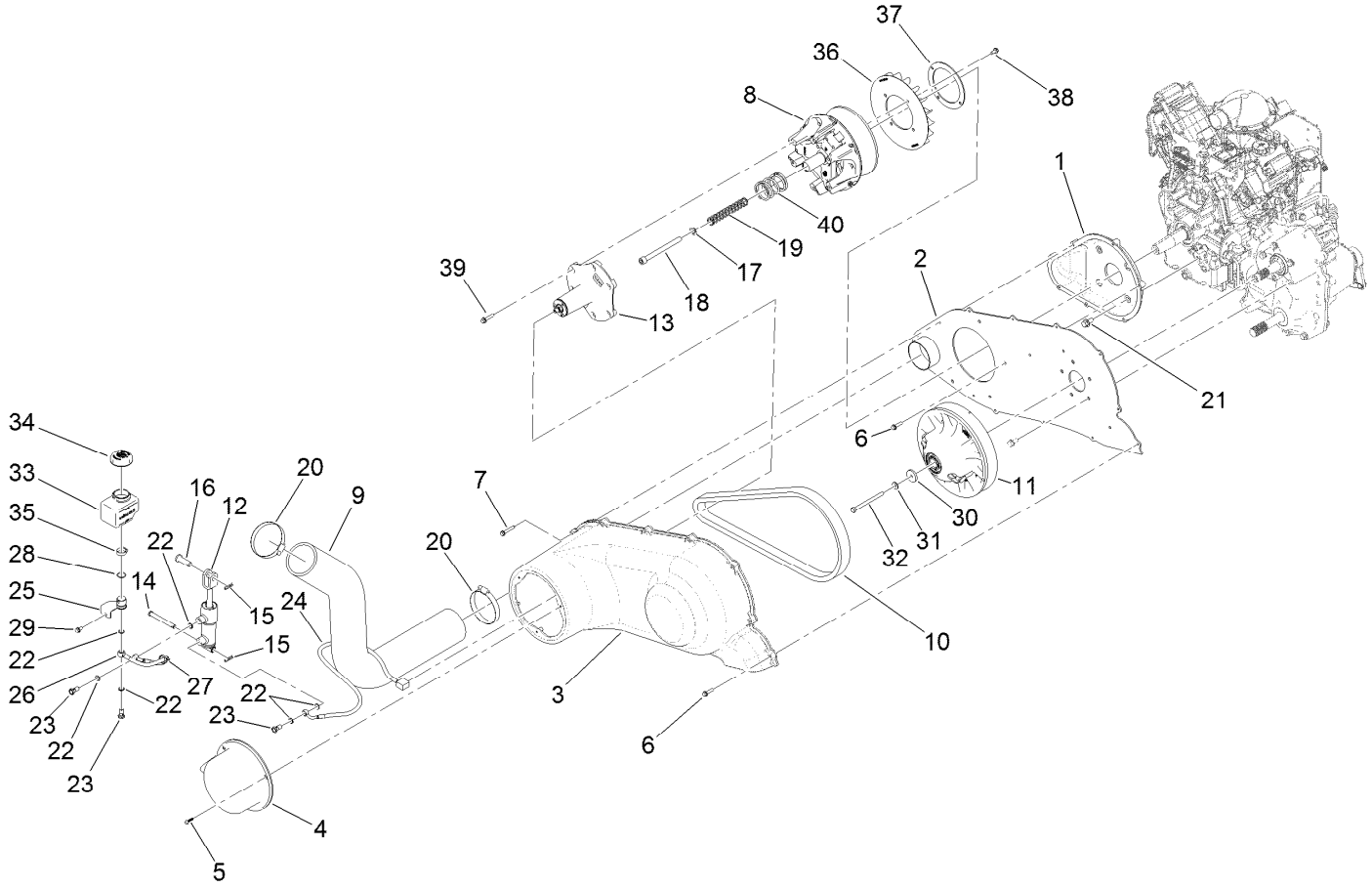

Clutch Assembly (continued)

Ref.	Part Number	Qty.	Description
37	127-8640	1	Stiffener-Fan
38	32144-10	4	Screw-HWH
39	127-8639	6	Screw-HHF
40	127-8636	1	Spring-Clutch, Primary

● Not serviced separately

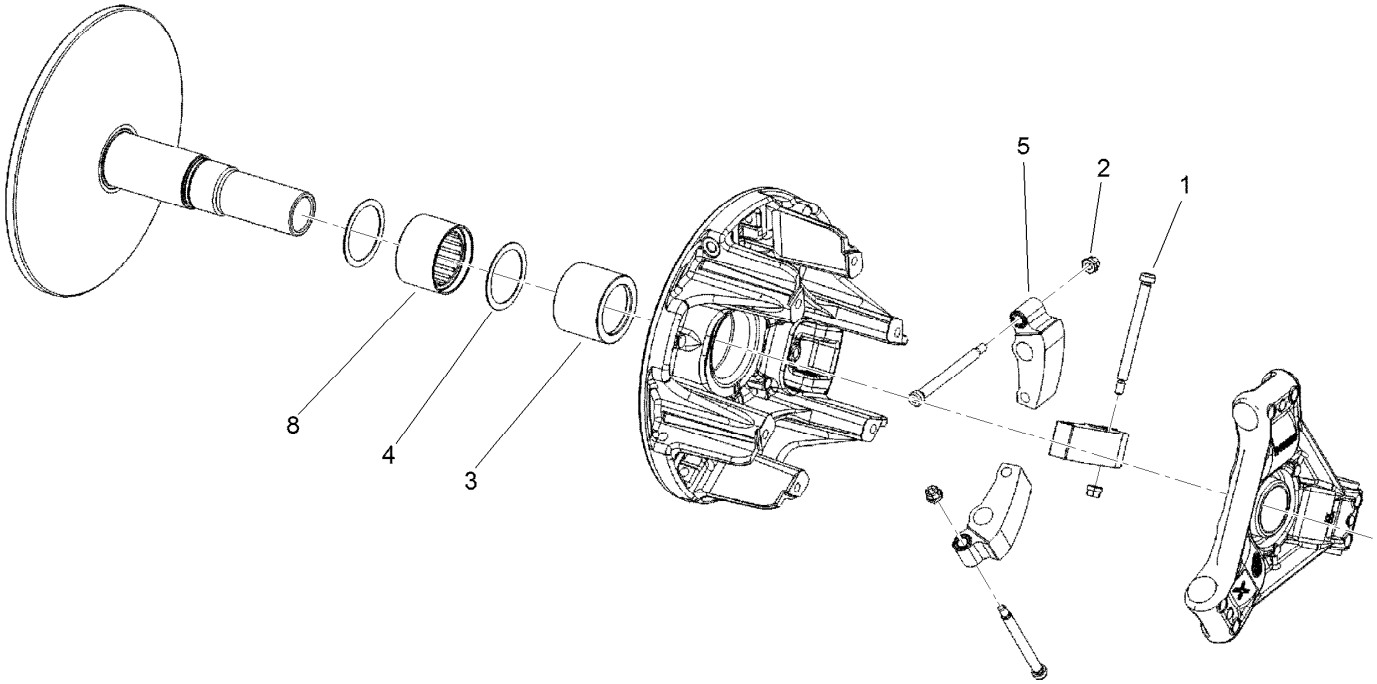

Primary Clutch Assembly No. 121-9739

Ref.	Part Number	Qty.	Description
1	119-6016	3	Screw-Shoulder
2	119-6015	3	Nut-Hex, Lock
3	130-4068	1	Cap-Sleeve, Idler
4	130-4069	2	Washer-Thrust
5	119-6019	3	Weight-Clutch
8	130-4067	1	Sleeve-Idler, Primary

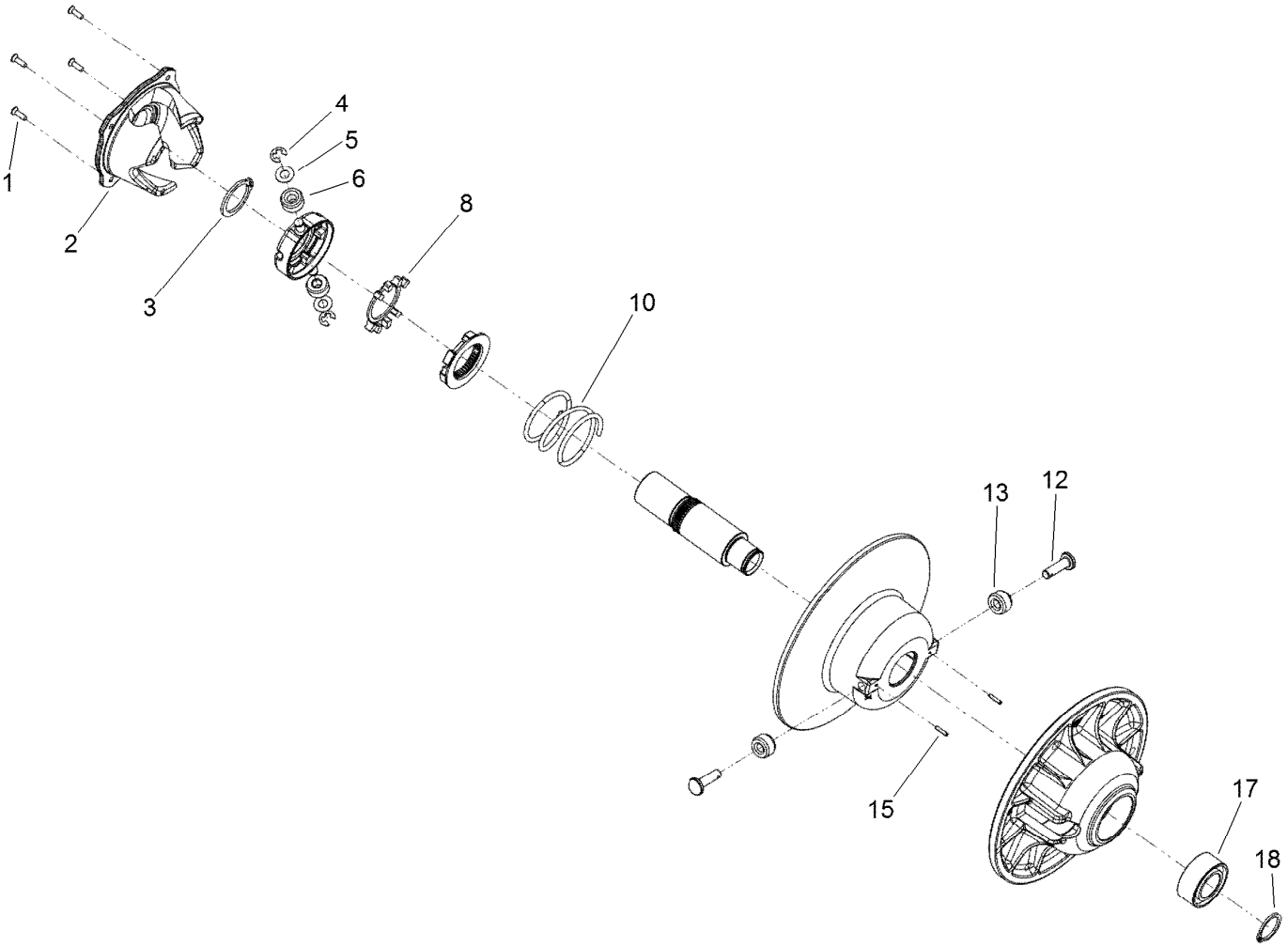

Secondary Clutch Assembly No. 121-9740

Ref.	*Part Number*	*Qty.*	*Description*
1	130-4055	4	Screw
2	130-4056	1	Cam Assembly
3	130-4057	1	Ring-Retaining, EXT
4	130-4058	2	E-Ring
5	130-4059	2	Washer-Thrust
6	130-4060	2	Roller-Clutch, Torlon
8	130-4061	1	Dampener-Spider
10	130-4062	1	Spring-Compression, Red
12	130-4063	2	Pin-Roller
13	130-4064	2	Roller-Clutch, Stanyl
15	130-4065	2	Pin-Spring, Slotted
17	130-4066	1	Bearing-Ball
18	130-4612	1	Ring-Retaining

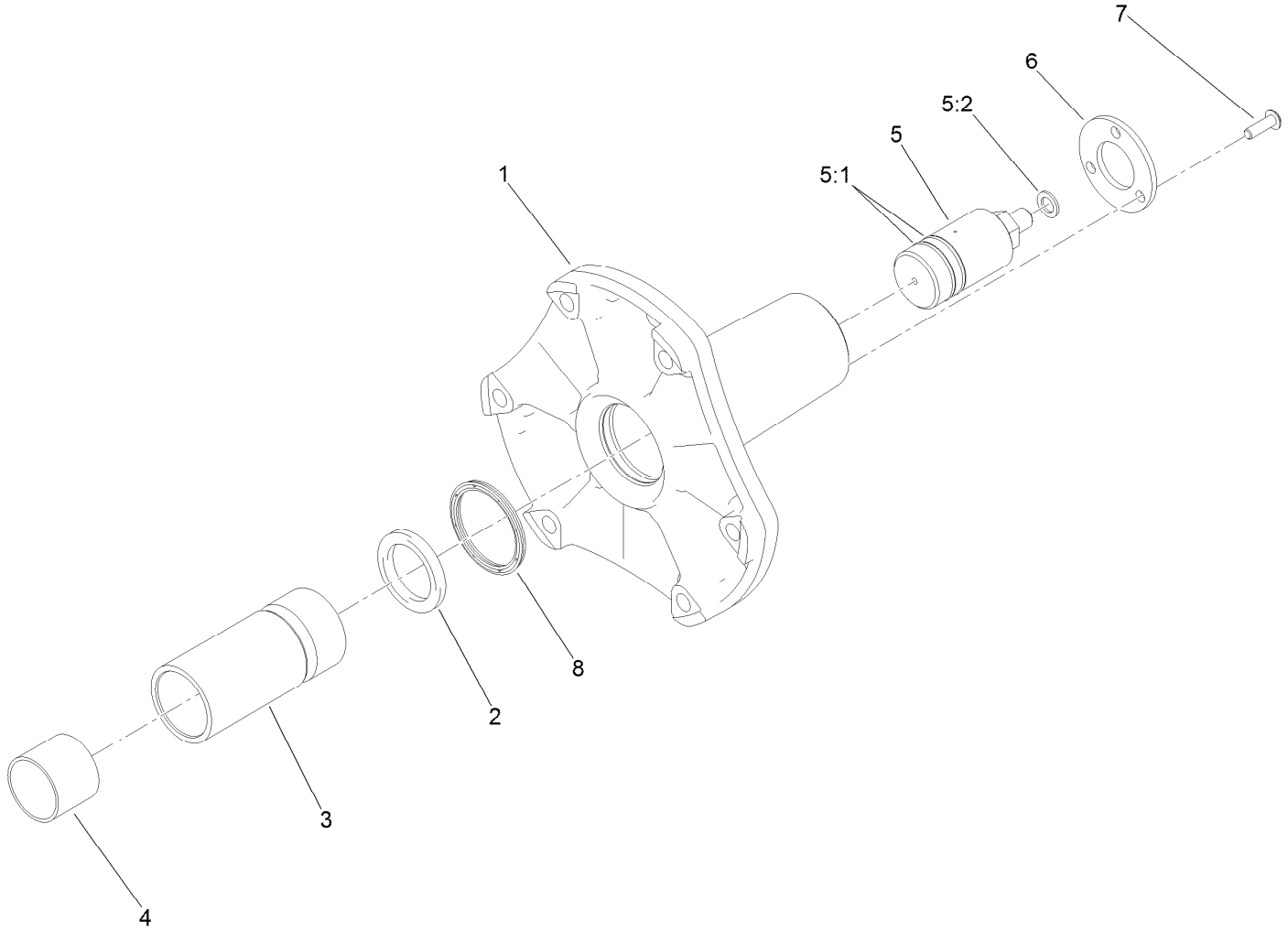

Speed Limiter Cover Assembly

Ref.	*Part Number*	*Qty.*	*Description*
1	127-8743	1	Cover-Control, Speed
2	127-8748	1	Ring-Quad
3	127-8736	1	Piston-HYD
4	121-9730	1	Bushing-Sleeve
5	121-9845	1	Union-Rotary
5:1	127-8861	2	O-Ring
5:2	115-2341	1	Washer-Banjo
6	121-9731	1	Retainer
7	3274-39	3	Screw-HSBH
8	127-8747	1	U-Cup

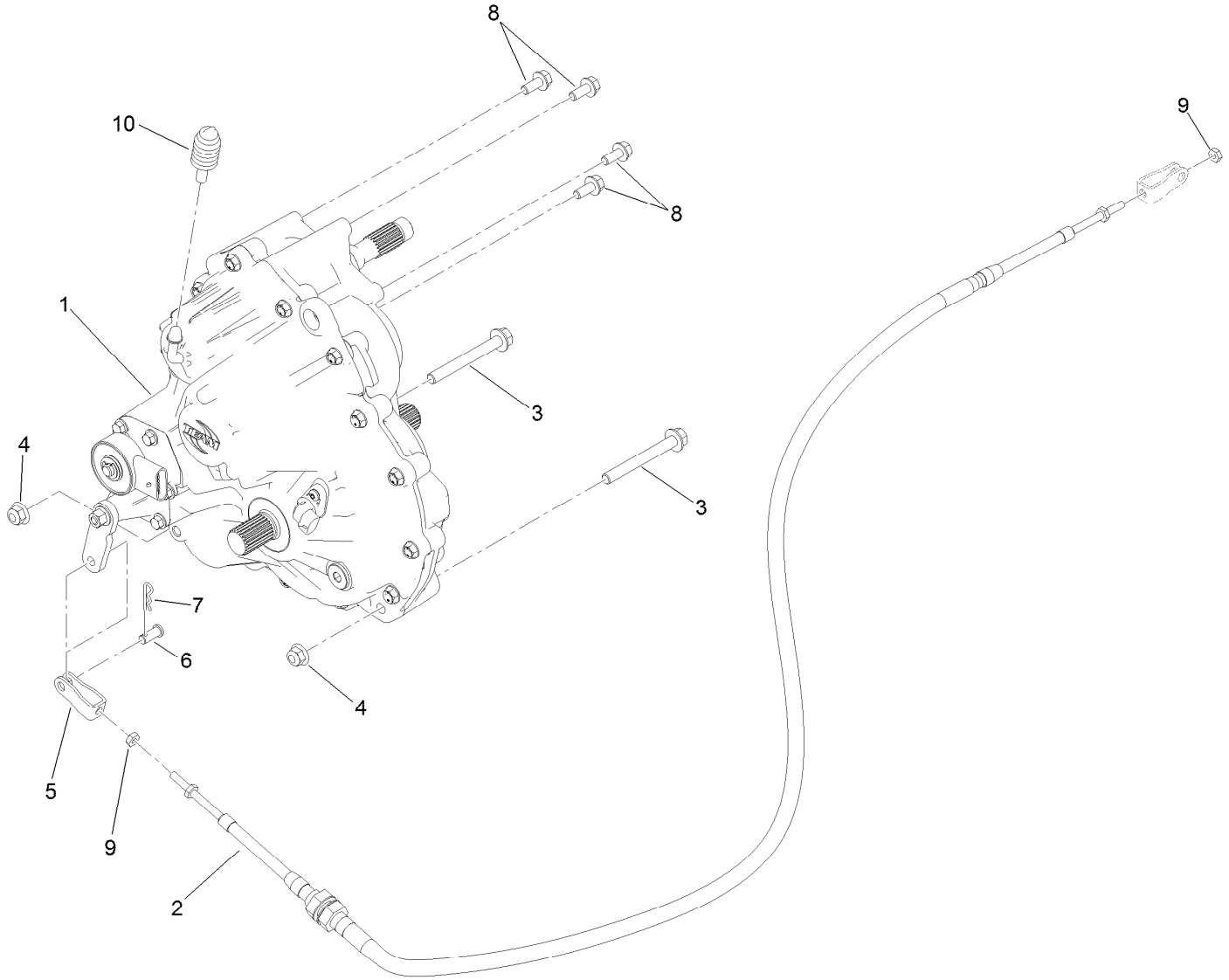

Transmission Assembly

Ref.	*Part Number*	*Qty.*	*Description*
1	121-9603	1	Transmission
2	121-9843	1	Cable-Shift
3	3234-41	2	Screw-HHF
4	104-8301	2	Nut-HF, NI
5	87-2310	1	Clevis-Cable
6	283-62	1	Pin-Clevis
7	3290-307	1	Pin-Cotter
8	3234-5	5	Screw-HHF
9	3220-1	2	Nut-Jam
10	127-8859	1	Bellows-Breather

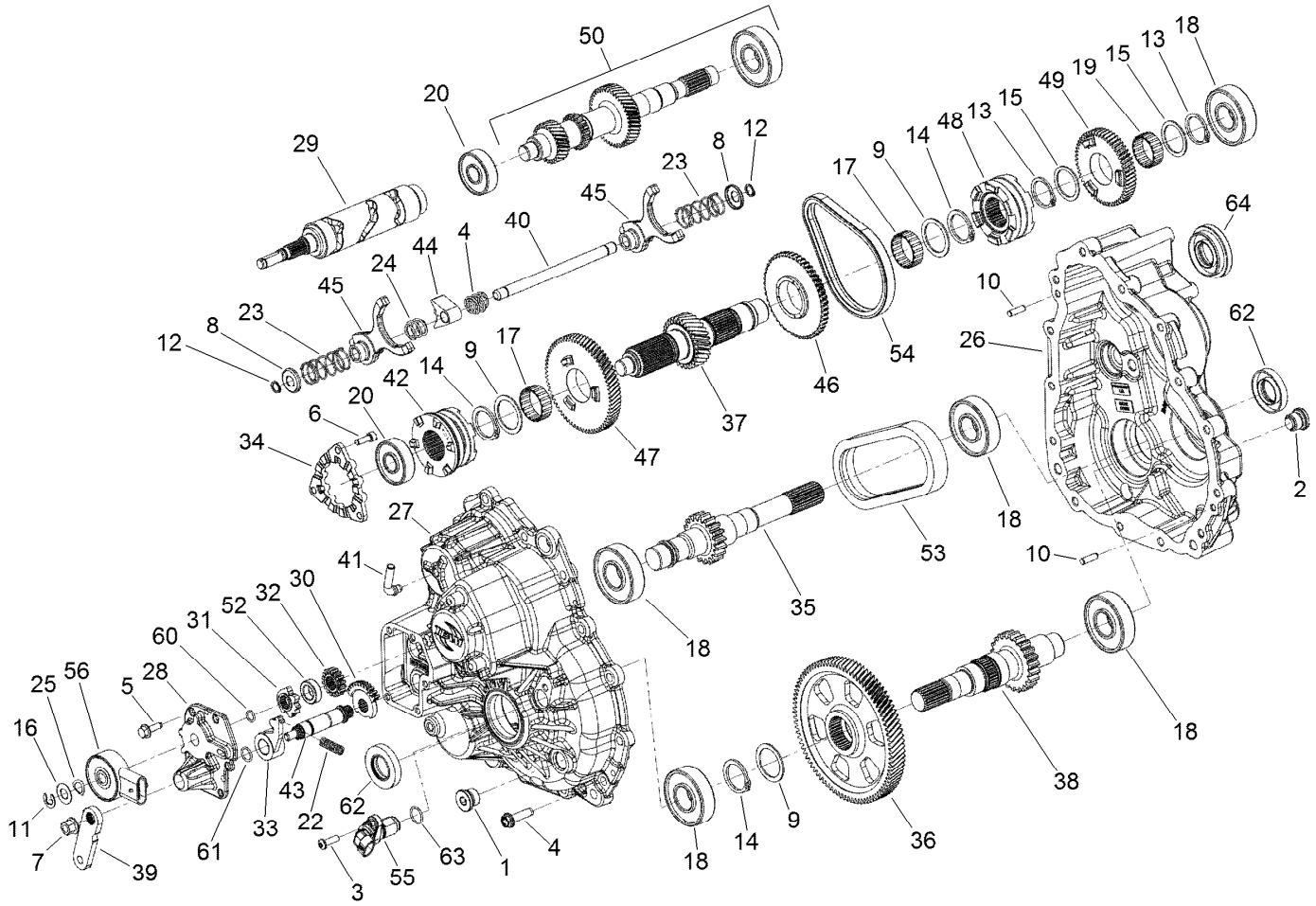

Transmission Assembly No. 121-9603

Ref.	Part Number	Qty.	Description
1	130-4600	1	Plug
2	130-4601	1	Plug-Magnetic
3	130-4602	1	Screw
4	130-4603	14	Screw
5	130-4604	5	Screw
6	130-4605	3	Screw
7	130-4606	1	Nut
8	130-4607	2	Washer-Cup
9	130-4608	3	Washer
10	130-4609	2	Pin-Dowel
11	130-4610	1	Ring-Snap
12	130-4611	2	Ring-Retaining
13	130-4612	2	Ring-Retaining
14	130-4613	3	Ring-Snap, EXT
15	130-4614	2	Washer-Thrust
16	130-4615	1	Washer-Thrust
17	130-4616	2	Bearing-Needle
18	130-4617	5	Bearing-Ball
19	130-4618	1	Bearing-Needle
20	130-4619	2	Bearing-Ball
22	130-4623	1	Spring-Compression

Ref.	Part Number	Qty.	Description
23	130-4620	2	Spring-Compression
24	130-4621	2	Spring-Compression
25	130-4622	1	Spring-Washer
26	130-4624	1	Gearcase-Front
27	130-4625	1	Gearcase-Rear
28	130-4626	1	Cover-Gear, Sector
29	130-4627	1	Drum-Shift
30	130-4628	1	Gear-Sector, 31T
31	130-4629	1	Star-Detent
32	130-4630	1	Gear-Sector, 16T
33	130-4631	1	Pawl-Detent
34	130-4632	1	Plate-Park, 12-Face
35	130-4636	1	Shaft-Output, Front (22T)
36	130-4633	1	Gear-Helical, 88T
37	130-4634	1	Shaft-Reverse, 29T
38	130-4635	1	Shaft-Output, Rear (22T)
39	130-4637	1	Bellcrank-180 Degree
40	130-4638	1	Shaft
41	130-4639	1	Tube-Vent
42	130-4647	1	Dog-Shift, Park
43	130-4640	1	Shaft-Shift

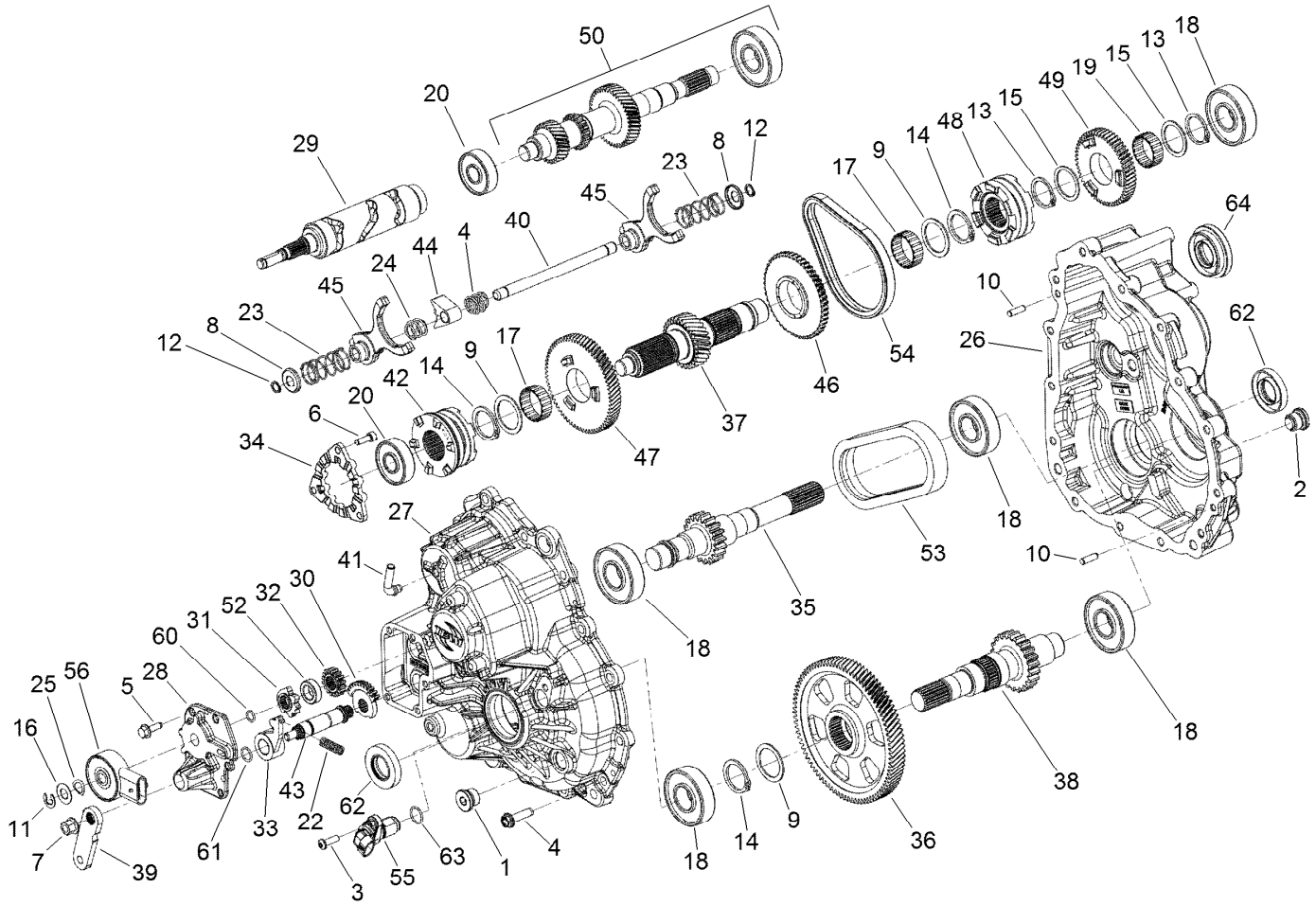

Transmission Assembly No. 121-9603 (continued)

Ref.	Part Number	Qty.	Description
44	130-4641	1	Collar-Shift
45	130-4642	2	Fork-Shift
46	130-4643	1	Sprocket-48T, 6-Face
47	130-4644	1	Gear-Low, 67T
48	130-4646	1	Dog-Engagement, 6-Face
49	130-4645	1	Gear-53T
50	130-4648	1	Subassembly-Input
52	130-4649	1	Spacer
53	130-4650	1	Chain-Silent, 11W40P

Ref.	Part Number	Qty.	Description
54	130-4651	1	Chain-Silent, Type 101
55	130-4652	1	Sensor-Speed
56	130-4653	1	Switch-Rotary, 6-Pin
60	130-4654	1	O-Ring
61	130-4655	1	O-Ring
62	130-4656	1	Seal-Lip, Triple
63	130-4657	1	O-Ring
64	130-4658	1	Seal-Lip, Triple

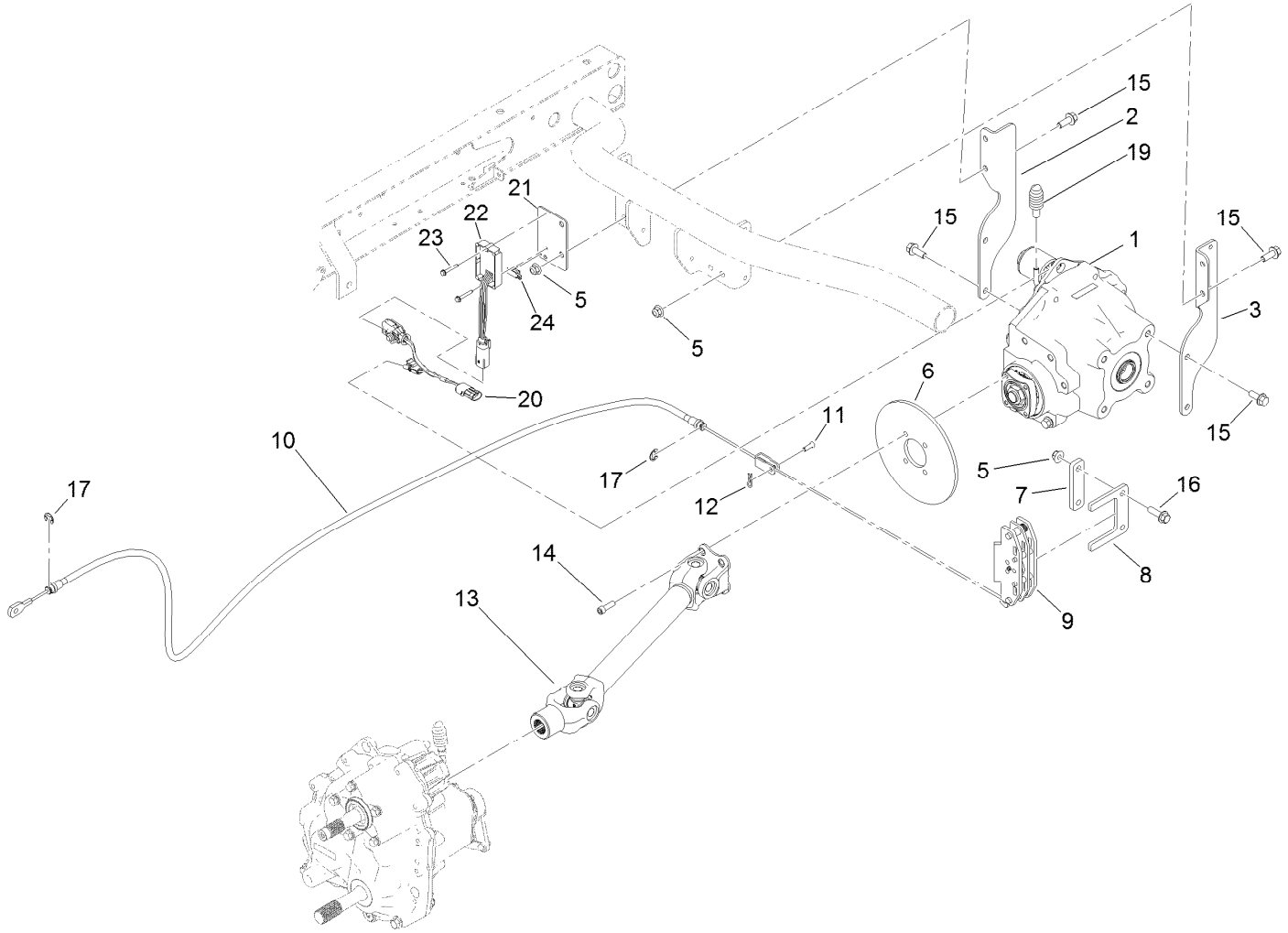

Rear Drive Assembly

Ref.	Part Number	Qty.	Description
1	121-9604	1	Differential ASM
2	121-9616-03	1	Mount-Rear, RH
3	121-9617-03	1	Mount-Rear, LH
5	104-8301	6	Nut-HF, NI
6	121-9823	1	Rotor-Brake, Park
7	121-9841	1	Spacer-Brake, Park
8	109-0958	1	Plate-Mount, Brake
9	109-2889	1	Caliper-Brake
10	121-9842	1	Cable-Brake, Park
11	1-808265	1	Pin-Clevis
12	3290-307	1	Pin-Cotter

Ref.	Part Number	Qty.	Description
13	121-9832	1	Rear Driveshaft ASM
14	127-8633	4	Screw-HSH, Lock
15	3234-11	14	Screw-HHF
16	119-4061	2	Screw-HHF
17	32120-47	2	Ring-Retaining, External
19	127-8859	1	Bellows-Breather
20	122-0589	1	Harness-Wire
21	127-8894	1	Bracket
22	131-8309	1	Controller-Solenoid
23	100-4352	2	Screw-HWH
24	32180-039	1	Clip-Connector, Molex

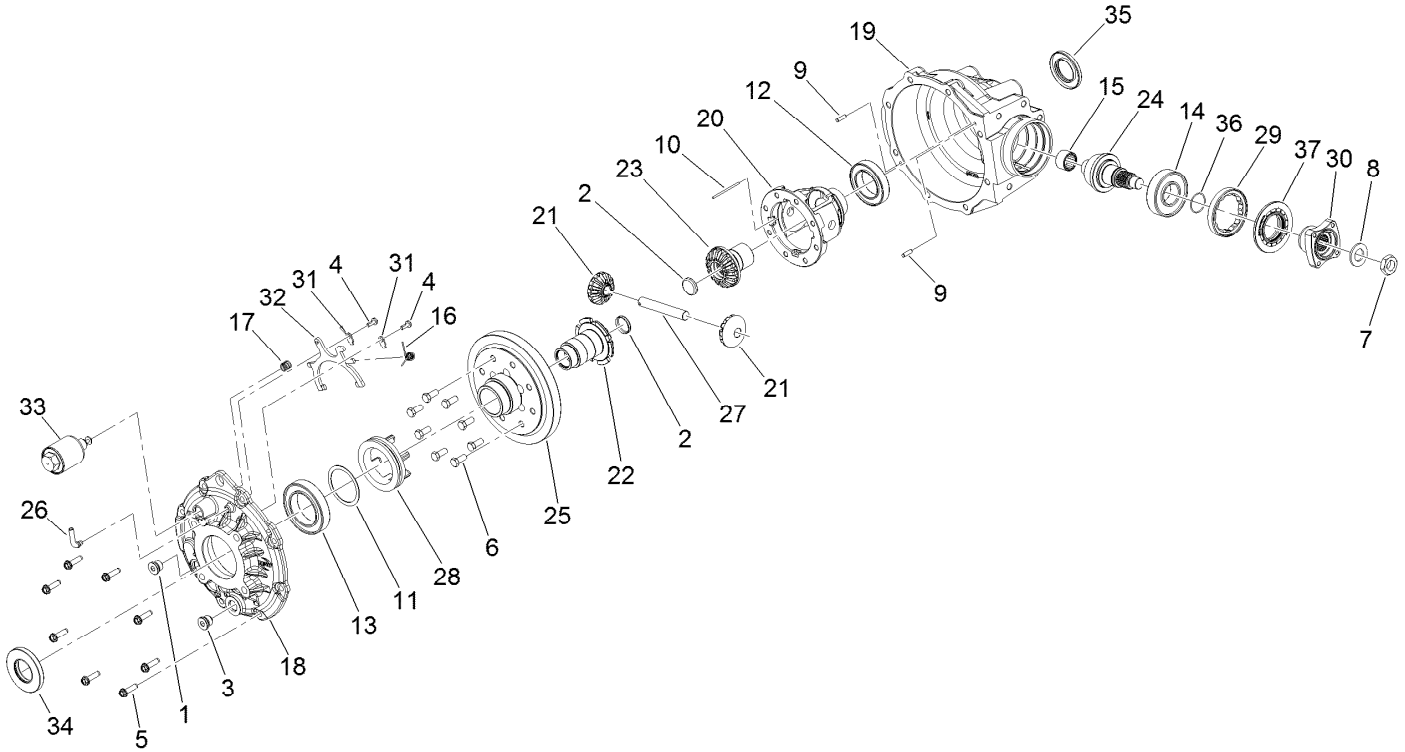

Differential Assembly No. 121-9604

Ref.	Part Number	Qty.	Description
1	130-4600	1	Plug
2	130-4691	2	Plug-Expansion
3	130-4601	1	Plug-Magnetic
4	130-4660	2	Screw
5	130-4603	8	Screw
6	130-4661	8	Screw-Cap, HH
7	130-4662	1	Nut-Hex
8	130-4663	1	Washer-Locking
9	130-4609	2	Pin-Dowel
10	130-4664	1	Pin-Dowel
11	130-4665	1	Shim
12	130-4666	1	Bearing-Ball
13	130-4667	1	Bearing-Ball
14	130-4668	1	Bearing-Ball
15	130-4669	1	Bearing-Needle
16	130-4671	1	Spring-Torsion, Return
17	130-4670	1	Spring-Compression
18	130-4672	1	Cover-Output
19	130-4673	1	Gearcase
20	130-4674	1	Housing-Differential
21	130-4677	2	Pinion-Differential, 12T
22	130-4678	1	Gear-Output, 16T
23	130-4679	1	Gear-Output, 16T
24	130-4675	1	Pinion-Spiral, 10T
25	130-4676	1	Gear-Spiral, 37T
26	130-4639	1	Tube-Vent
27	130-4680	1	Pin-Pinion, Differential
28	130-4681	1	Dog-Engagement, 6 Pin
29	130-4683	1	Collar-Lock
30	130-4682	1	Coupler
31	130-4684	2	Retainer-Fork
32	130-4685	1	Fork-Pivot, Shift
33	130-4686	1	Solenoid
34	130-4687	1	Seal-Lip, Triple
35	130-4688	1	Seal-Lip, Triple
36	130-4689	1	O-Ring
37	130-4690	1	Seal-Lip, Triple

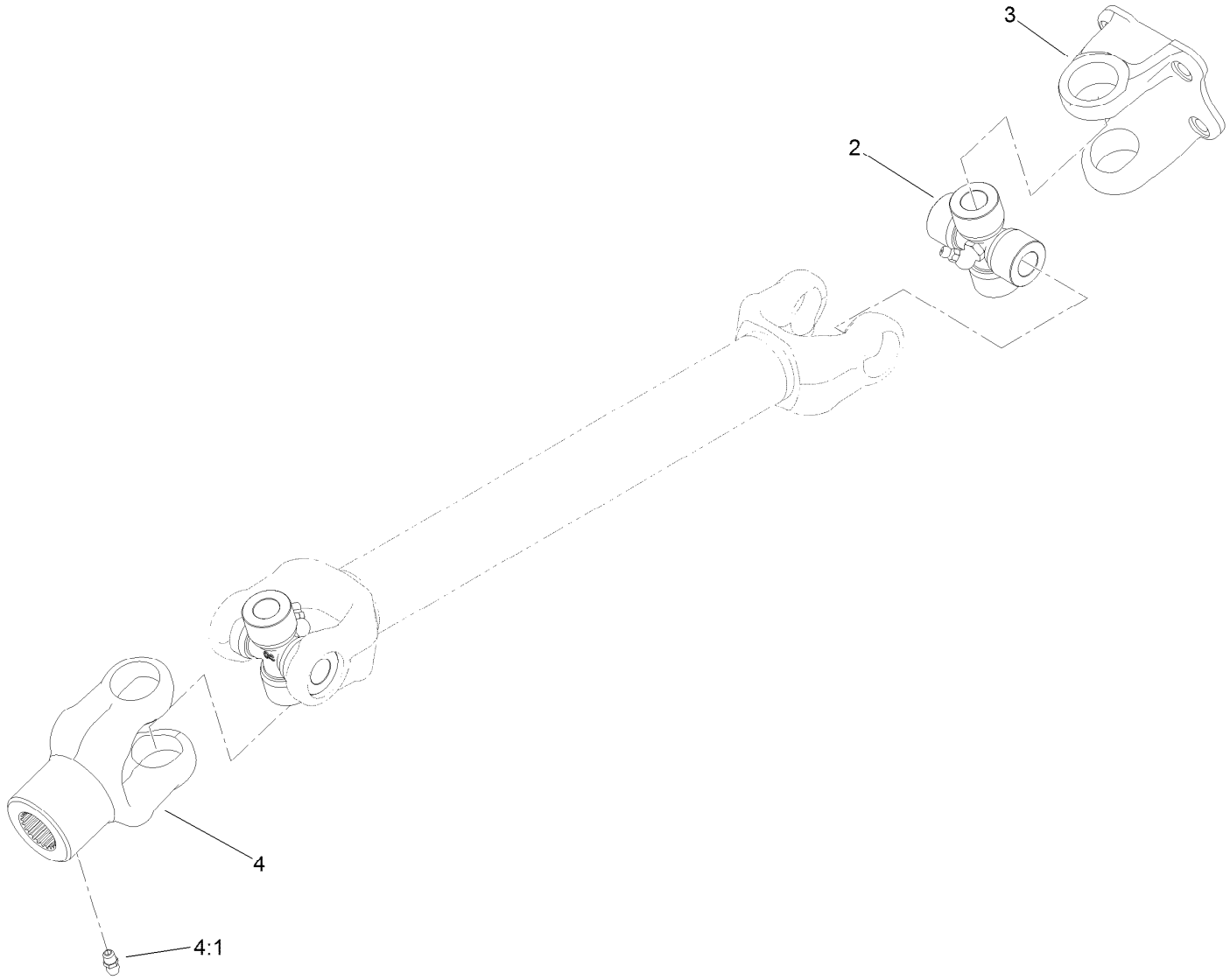

Driveshaft Assembly No. 121-9832

Ref.	*Part Number*	*Qty.*	*Description*
2	121-9880	2	U-Joint
3	121-9822	1	Yoke-Flange
4	121-9879	1	Yoke-Slip
4:1	106-1104	1	Fitting-Grease

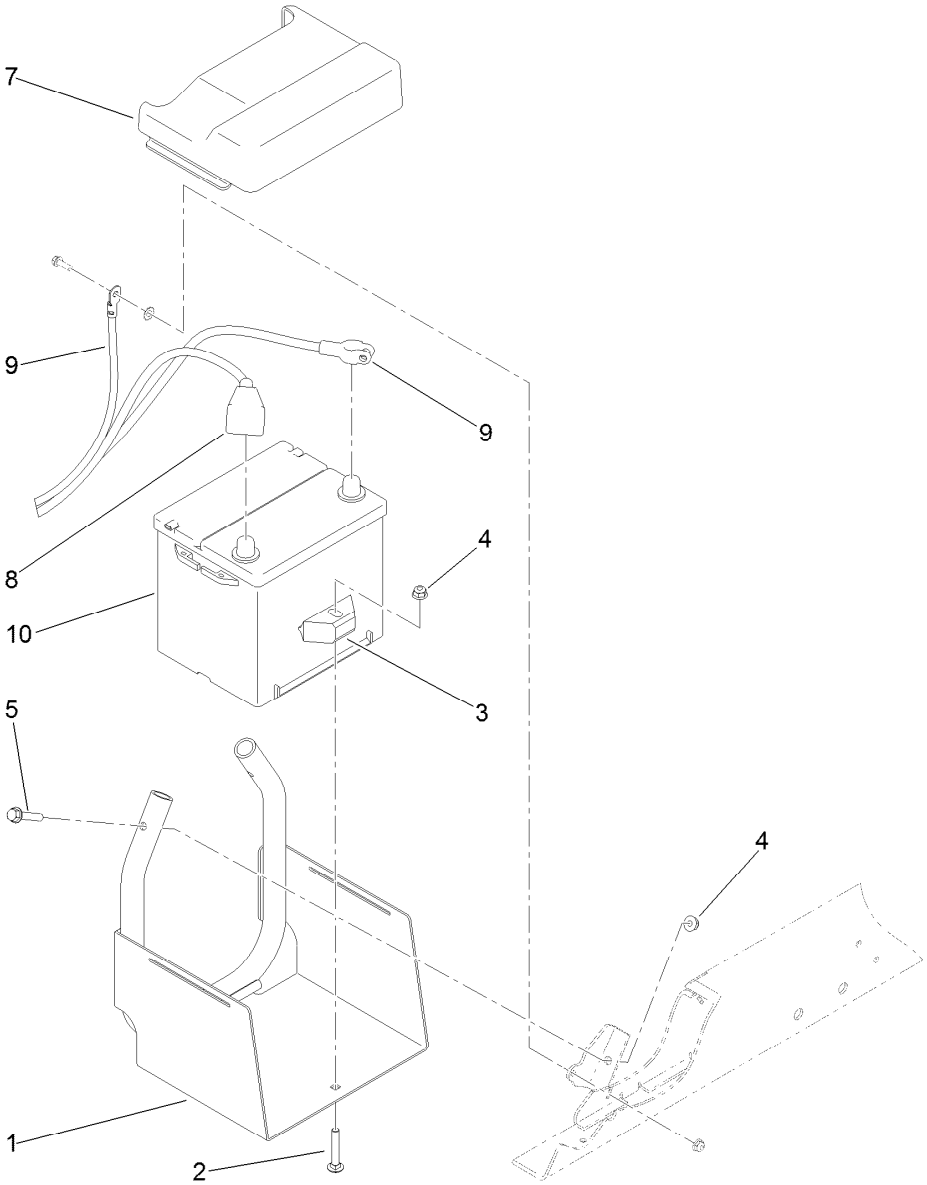

Battery Installation Assembly

Ref.	Part Number	Qty.	Description
1	115-2237-03	1	Tray-Battery
2	3230-6	1	Screw-CARR
3	66-2490	1	Retainer-Battery
4	104-8300	3	Nut-HF, NI
5	94-5780	2	Screw-HWH
7	119-9496	1	Cover-Battery
8	122-0122	1	Cable-Battery, Positive
9	122-0121	1	Cable-Battery, Negative
10	106-5187	1	Battery-Dry

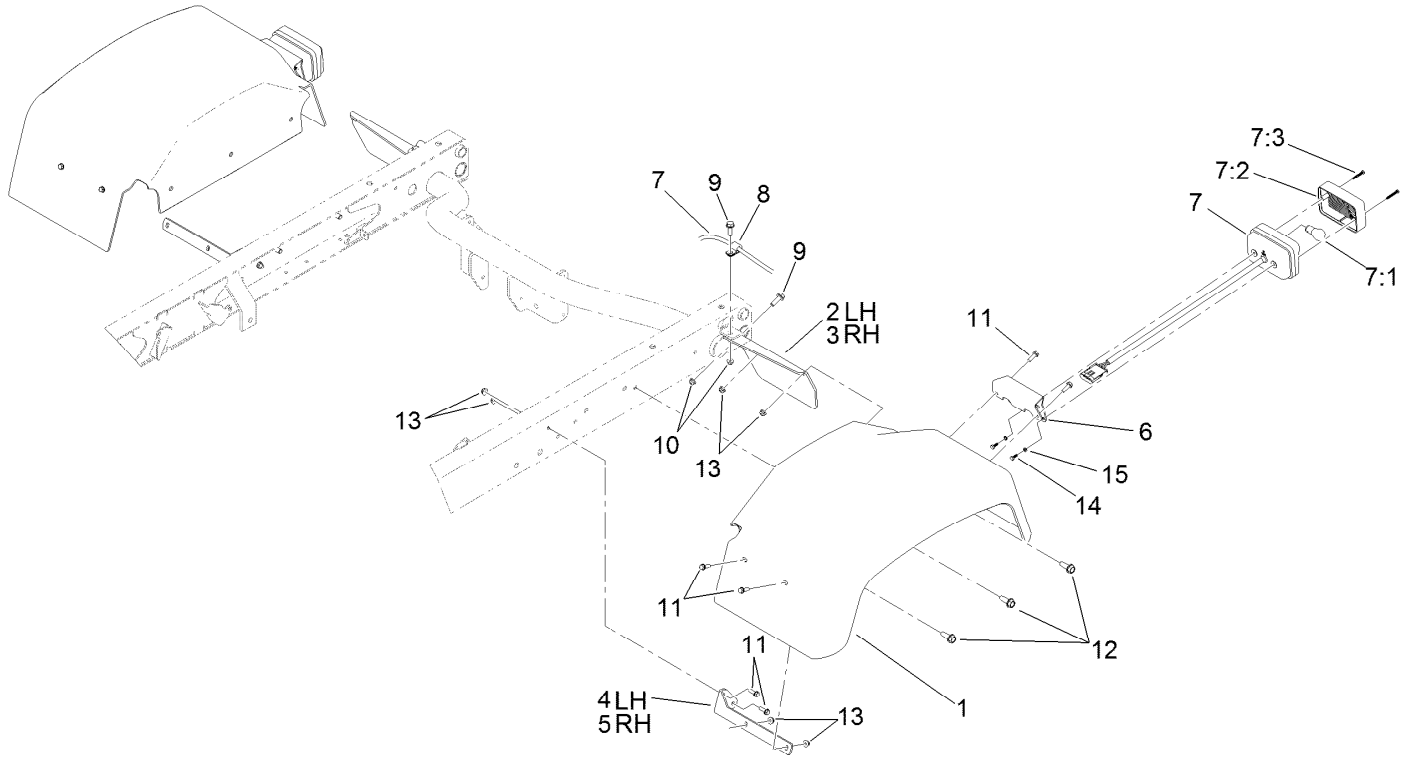

Rear Tail Light and Fender Assembly

Ref.	Part Number	Qty.	Description
1	87-6660	2	Fender-Rear
2	93-8943-03	1	Bracket-Fender, Rear (LH)
3	93-8944-03	1	Bracket-Fender, Rear (RH)
4	93-8941-03	1	Bracket-Fender, Front (LH)
5	93-8942-03	1	Bracket-Fender, Front (RH)
6	121-6269-03	2	Bracket-Light, Tail
7	120-4820	2	Light-Tail, Brake
7:1	115-7858	1	Bulb-7528
7:2	121-6271	1	Lens-Light, Tail

Ref.	Part Number	Qty.	Description
7:3	121-6272	2	Screw-PPH
8	2412-93	2	Clamp-R
9	3234-17	4	Screw-HHF
10	104-8300	4	Nut-HF, NI
11	32105-15	12	Screw-HWH
12	105-6245	6	Screw-Tapping
13	104-7201	12	Nut-HF
14	121-6320	4	Screw-HH
15	43-5920	4	Washer-Lock, Spring

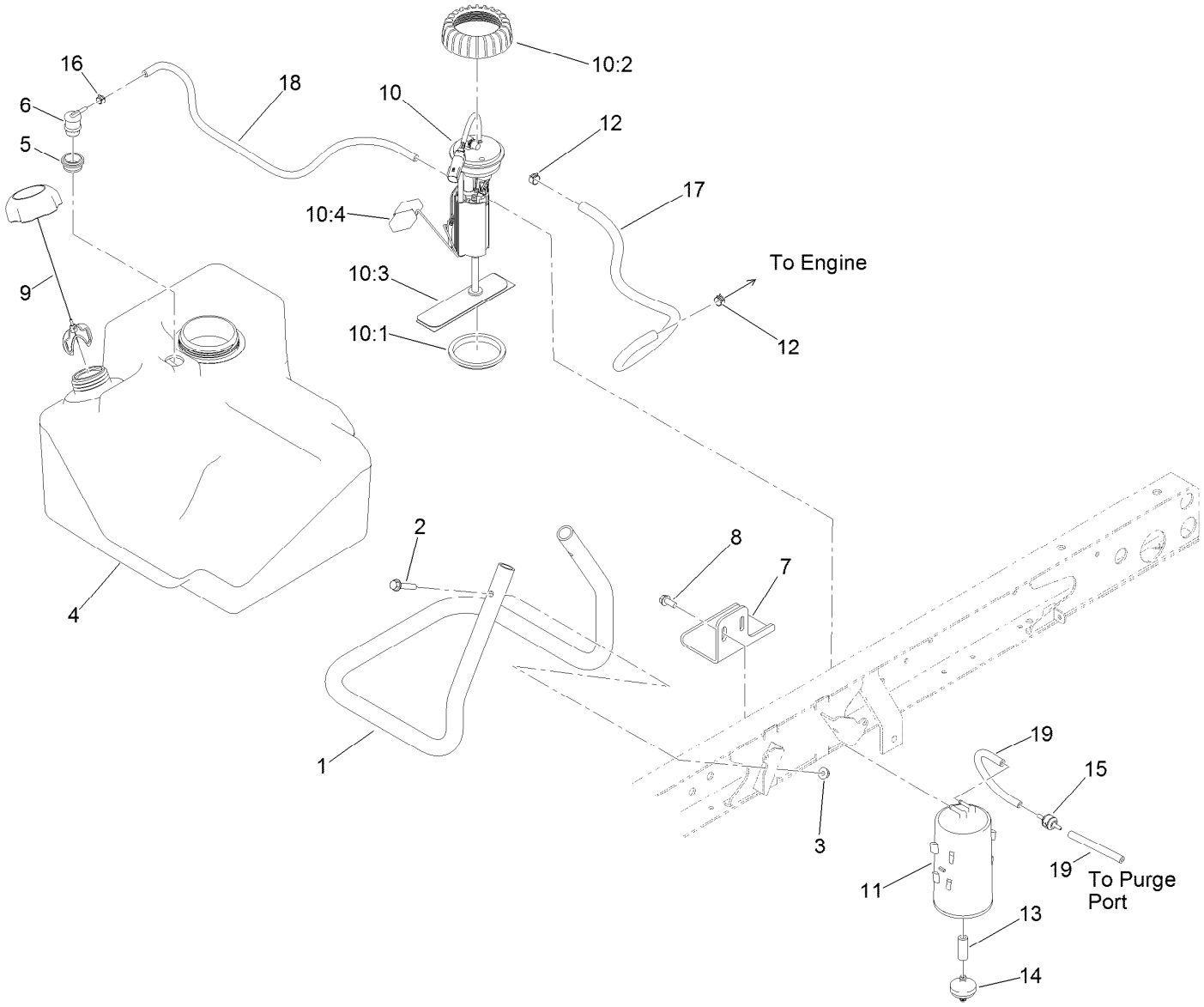

Fuel System Assembly

Ref.	Part Number	Qty.	Description
1	115-7767-03	1	Tube-Support
2	94-5780	2	Screw-HWH
3	104-8300	2	Nut-HF, NI
4	115-7700	1	Tank-Fuel
5	114-0284	1	Grommet
6	114-0285	1	Valve-Rollover
7	114-8404	1	Plate-Retainer
8	32144-11	2	Screw-HWHTF
9	115-7788	1	Cap-Fuel
10	127-8801	1	Fuel Pump ASM
10:1	115-2163	1	Gasket-Pump, Fuel
10:2	115-2162	1	Cap-Pump, Fuel

Ref.	Part Number	Qty.	Description
10:3	115-7818	1	Fuel Filter ASM
10:4	120-4812	1	Float
11	127-8685	1	Canister-Carbon
12	92-2379	2	Clamp-Hose
13	106-5317	1	Hose-Fuel
14	115-7854	1	Filter-Fuel, Inline
15	115-7868	1	Valve-Check, Vacuum
16	2412-146	1	Clamp-Hose
17	109-0279	1	Hose-Fuel
18	121-0780	1	Hose-Fuel
19	115-7871	2	Hose-Fuel

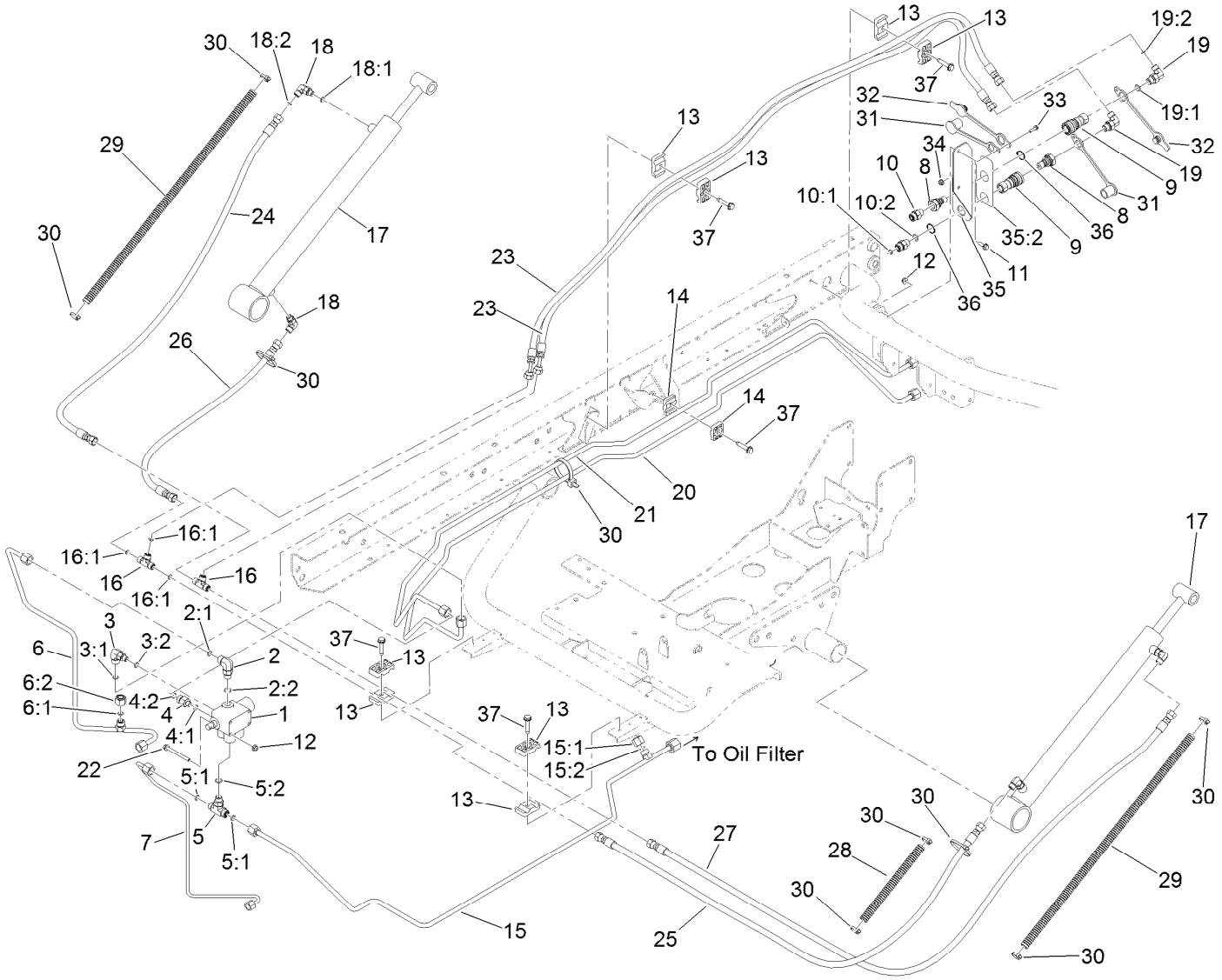

Hydraulic Lift Valve Assembly

Ref.	Part Number	Qty.	Description
1	43-1950	1	HYD Control Valve ASM
2	340-77	1	Fitting-Elbow, 90 DEG
2:1	237-22	1	O-Ring
2:2	237-42	1	O-Ring
3	340-97	1	Fitting-Elbow, 90 DEG
3:1	237-22	1	O-Ring
3:2	237-78	1	O-Ring
4	340-88	1	Fitting-Straight
4:1	237-22	1	O-Ring
4:2	237-78	1	O-Ring
5	340-94	1	Adapter
5:1	237-22	2	O-Ring
5:2	237-42	1	O-Ring
6	127-8604	1	Tube-HYD
6:1	237-22	1	O-Ring
6:2	340-117	1	Cap
7	127-8605	1	Tube-HYD
8	106-7969	2	Coupler-Quick, Male
9	106-7968	2	Coupler-Quick, Female
10	340-2	2	Fitting-Straight
10:1	237-22	1	O-Ring

Ref.	Part Number	Qty.	Description
10:2	237-42	1	O-Ring
11	3234-4	2	Screw-HHF
12	104-7201	2	Nut-HF
13	56-7976	8	Clamp-Tube
14	56-7973	2	Clamp-Tube
15	121-9859	1	Tube-HYD
15:1	237-22	1	O-Ring
15:2	340-117	1	Cap
16	340-21	2	Fitting
16:1	237-21	3	O-Ring
17	106-7939	2	HYD Cylinder ASM
18	340-132	4	Fitting-Elbow, 90
18:1	237-78	1	O-Ring
18:2	237-21	1	O-Ring
19	340-82	2	Fitting-Elbow, 90
19:1	237-42	1	O-Ring
19:2	237-21	1	O-Ring
20	121-9862	1	Tube-HYD
21	121-9863	1	Tube-HYD
22	114-8410	2	Screw-HHF
23	121-9875	2	Hose ASM-HYD HP

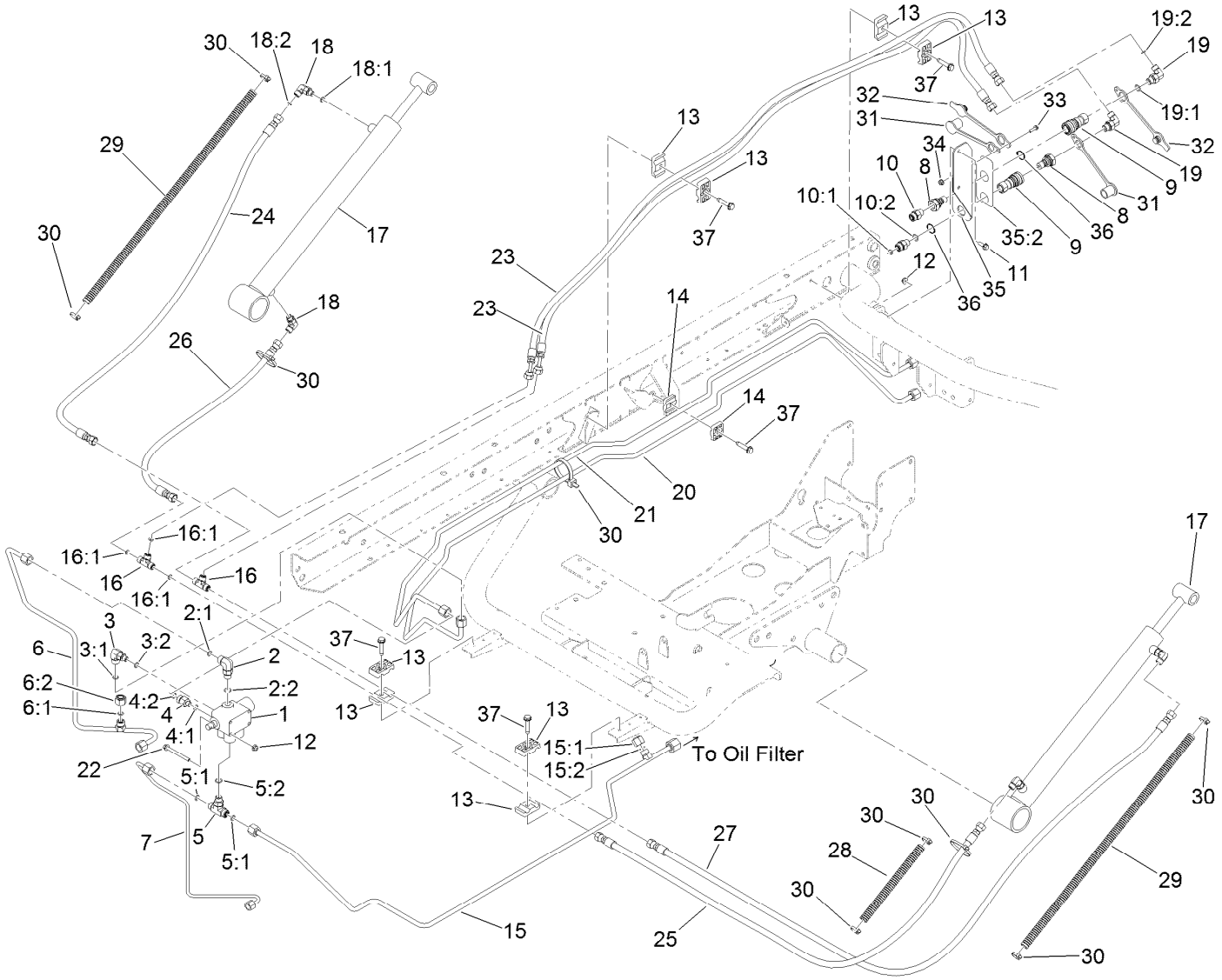

Hydraulic Lift Valve Assembly (continued)

Ref.	Part Number	Qty.	Description
24	115-7711	1	Hose-HYD
25	104-3751	1	Hose ASM-CYL, Lift
26	108-6505	1	Hose-HYD
27	98-4587	1	HYD Hose ASM
28	24-7922	1	Conduit-Convoluted, Split
29	24-7923	2	Conduit-Convoluted, Split
30	3290-379	9	Tie-Cable
31	106-7881	2	Cap-Dust, HYD

Ref.	Part Number	Qty.	Description
32	106-7882	2	Plug-Dust, HYD
33	32105-13	1	Screw-HWH
34	3290-148	1	Nut-HF
35	115-7715	1	Coupler Bracket ASM
35:2	115-7723	1	Decal-Disconnect, Quick
36	32151-83	2	Ring-Snap
37	32144-57	5	Screw

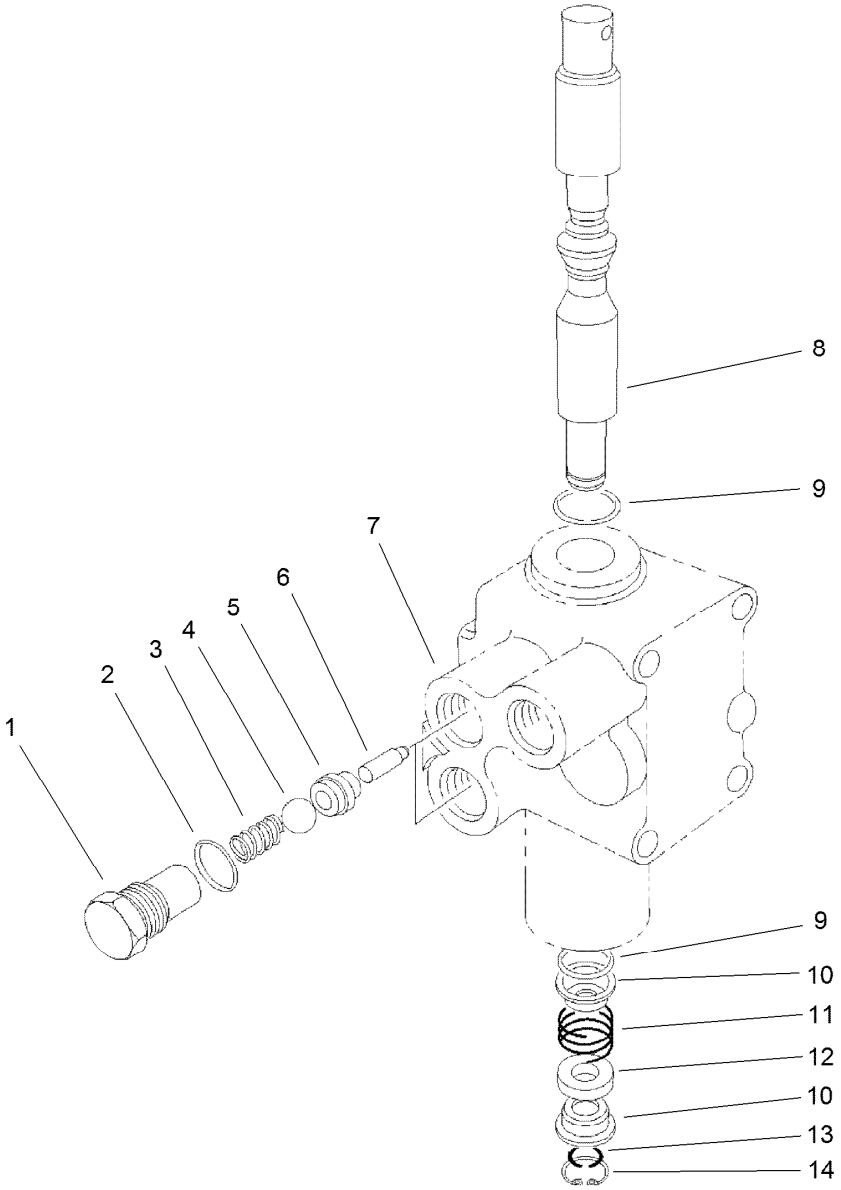

Control Valve Assembly No. 43-1950

Ref.	Part Number	Qty.	Description
1	22-8330	2	Plug
2	237-42	2	O-Ring
3	22-8340	2	Spring
4	22-8350	2	Ball
5	22-8370	2	Seat-Valve
6	22-8360	2	Pin
7		1	Body ●
8	22-8420	1	Spool
9	22-8500	2	O-Ring
10	22-8380	2	Retainer
11	22-8410	1	Spring
12	23-3030	1	Spacer
13	22-8480	1	Ring-Snap
14	22-8490	1	Ring-Snap

● Not serviced separately

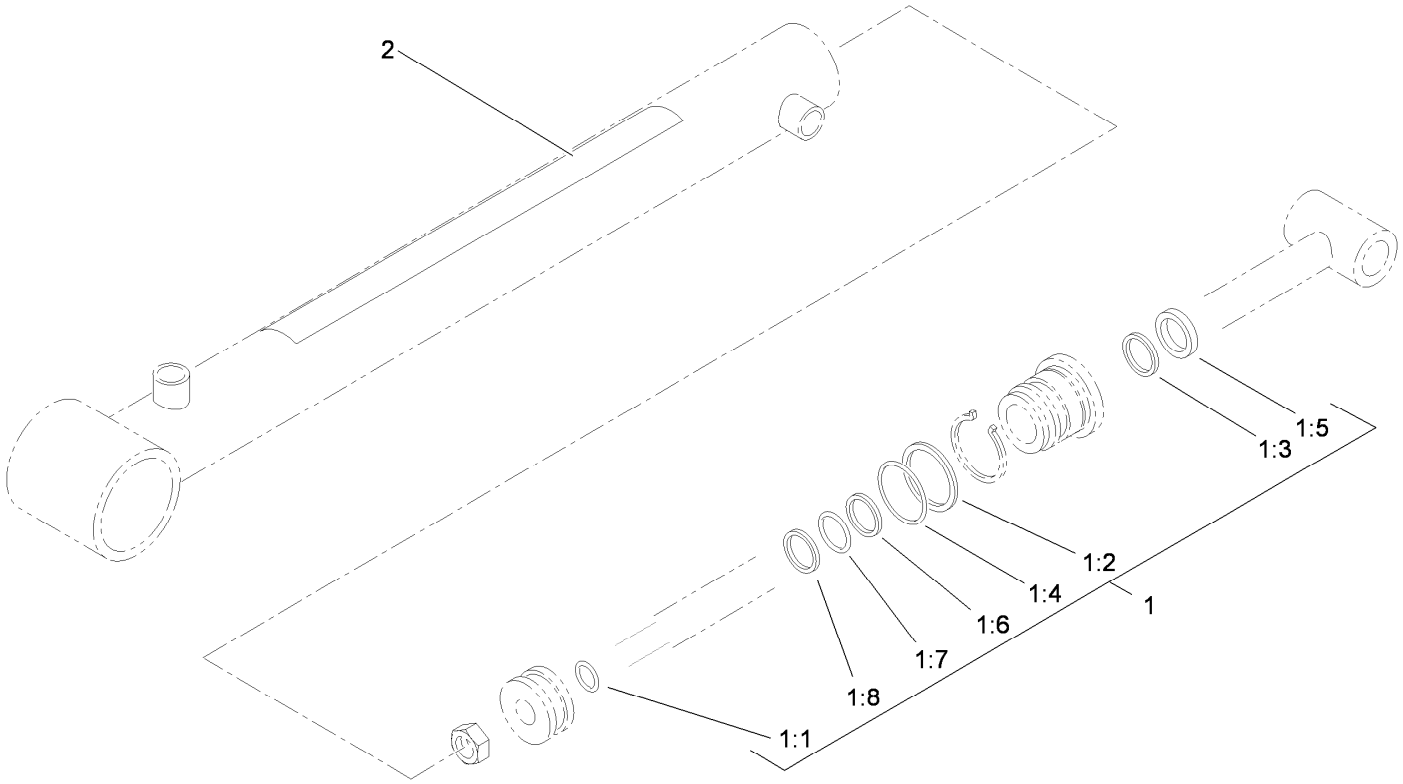

Hydraulic Cylinder Assembly No. 106-7939

Ref.	*Part Number*	*Qty.*	*Description*
1	106-7941	1	Seal Kit
1:1		1	O-Ring ●
1:2		1	O-Ring ●
1:3		1	Seal ●
1:4		1	Back-Up ●
1:5		1	Wiper ●
1:6		1	Seal ●
1:7		1	O-Ring ●
1:8		1	Ring-Wear ●
2	93-9852	1	Decal-Warning

● Not serviced separately

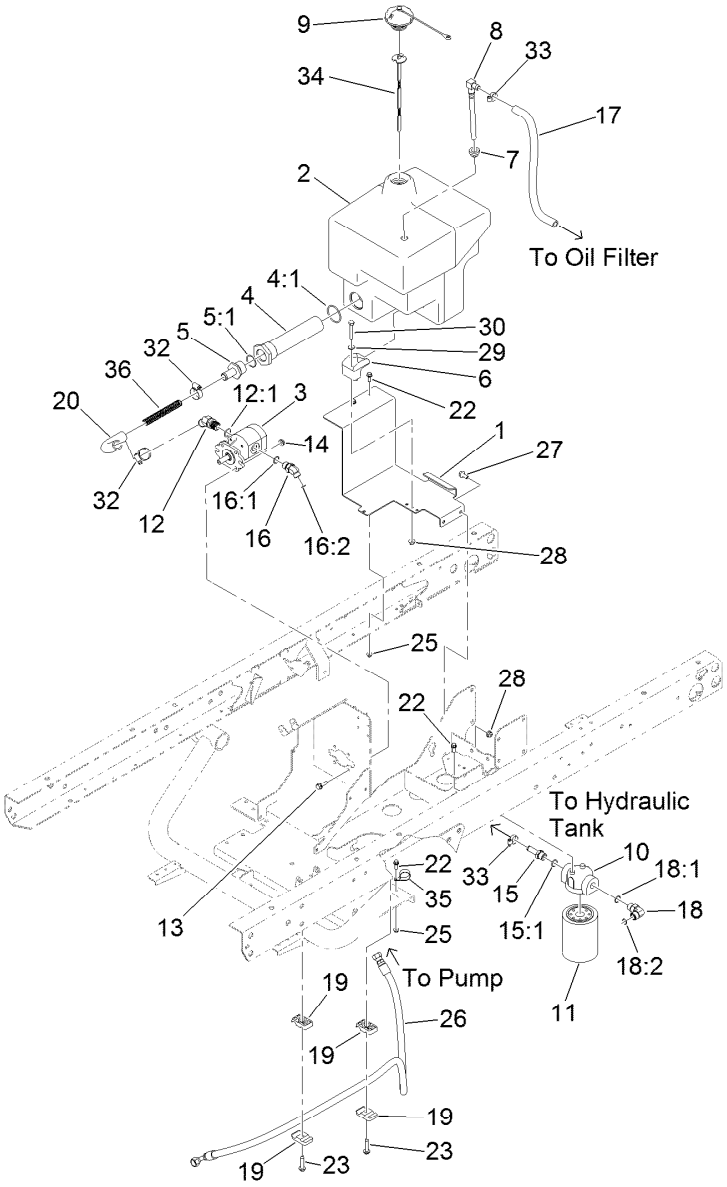

Hydraulic Pump, Tank and Filter Assembly

Ref.	Part Number	Qty.	Description
1	121-9814-03	1	Mount-Tank, Hydraulic
2	121-9813	1	Tank-HYD
3	114-8302	1	HYD Pump ASM
4	115-2230	1	Strainer-In Tank
4:1	340-136	1	O-Ring
5	99-6932	1	Fitting-STR
5:1	237-117	1	O-Ring
6	107-4543	1	Clamp
7	104-0790	1	Bushing
8	104-0791	1	Pipe-Stand
9	115-7877	1	Cap-Oil, HYD
10	87-8780	1	Head-Filter
11	54-0110	1	Filter-Oil, Transmission
12	99-6929	1	Fitting-Elbow45
12:1	237-80	1	O-Ring
13	3234-17	4	Screw-HHF
14	32128-20	4	Nut-HF
15	354-121	1	Fitting-STR
15:1	237-79	1	O-Ring
16	340-138	1	Fitting-HYD, 45 DEG
16:1	237-79	1	O-Ring

Ref.	Part Number	Qty.	Description
16:2	237-22	1	O-Ring
17	114-8438	1	Hose-HYD
18	340-98	1	Fitting-Elbow, 90 DEG
18:1	237-79	1	O-Ring
18:2	237-30	1	O-Ring
19	56-7970	4	Clamp-Tube
20	98-2713	1	Hose-Suction, HYD
22	115-5103	5	Screw-HHF
23	32144-57	2	Screw
25	104-7201	5	Nut-HF
26	121-9874	1	HYD Hose ASM
27	3234-47	2	Screw-HHF
28	104-8300	3	Nut-HF, NI
29	3256-23	1	Washer-Plain
30	322-10	1	Screw-HH
32	2412-129	2	Clamp-Hose
33	2412-36	2	Clamp-Hose
34	121-9885	1	Dipstick
35	2412-106	1	Clamp-R
36	99-5349	1	Spring-Compression

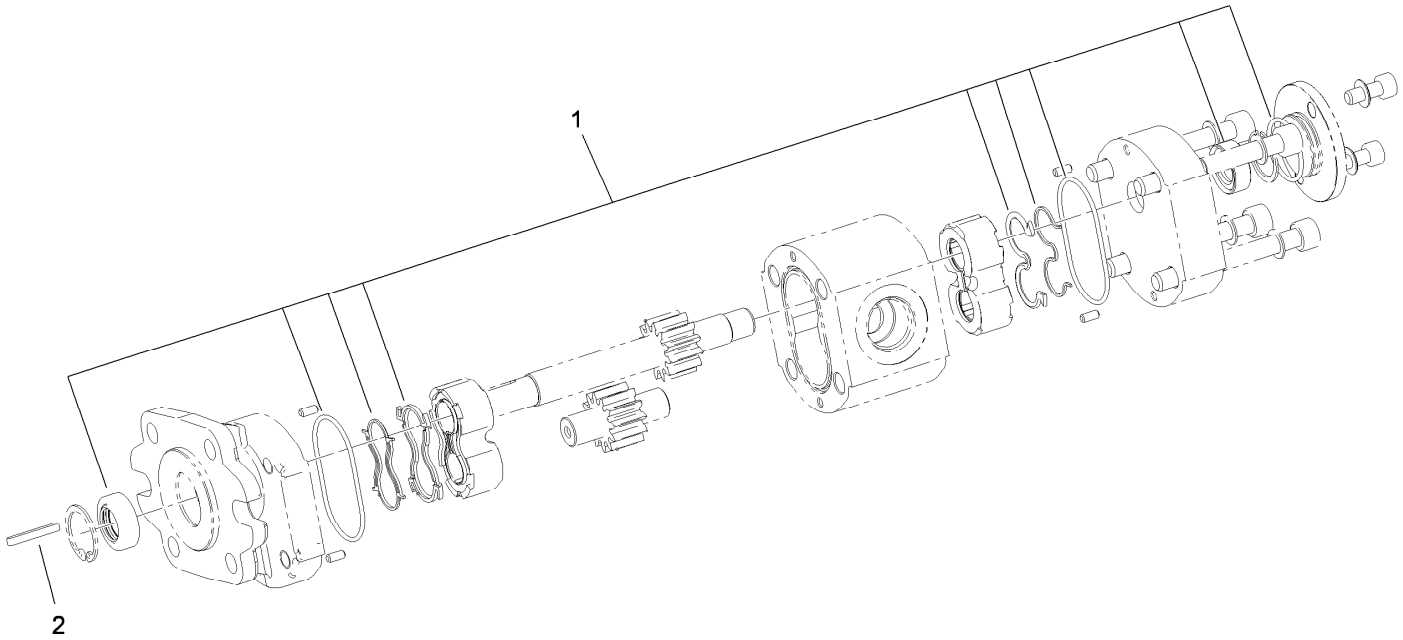

Hydraulic Gear Pump Assembly No. 114-8302

Ref.	*Part Number*	*Qty.*	*Description*
1	115-8696	1	Seal Kit
2	115-7855	1	Key-Square

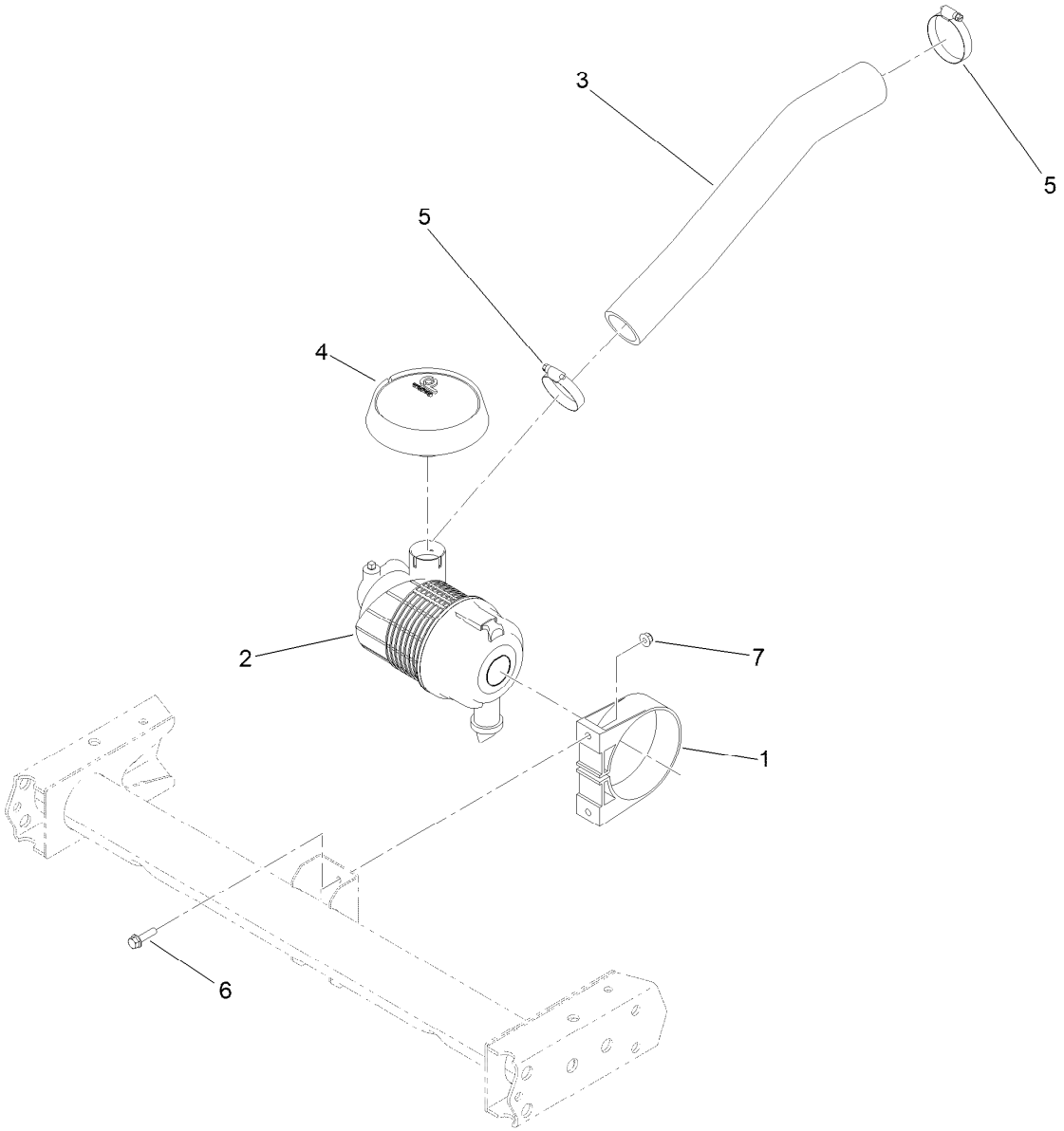

Air Cleaner Assembly

Ref.	Part Number	Qty.	Description
1	95-5806	1	Bracket-Mounting
2	119-9714	1	Air Cleaner ASM
3	121-9852	1	Hose-Intake, Engine
4	120-4848	1	Hood-Inlet, Air
5	2412-130	2	Clamp-Hose
6	3234-36	2	Screw-HHF
7	104-8300	2	Nut-HF, NI

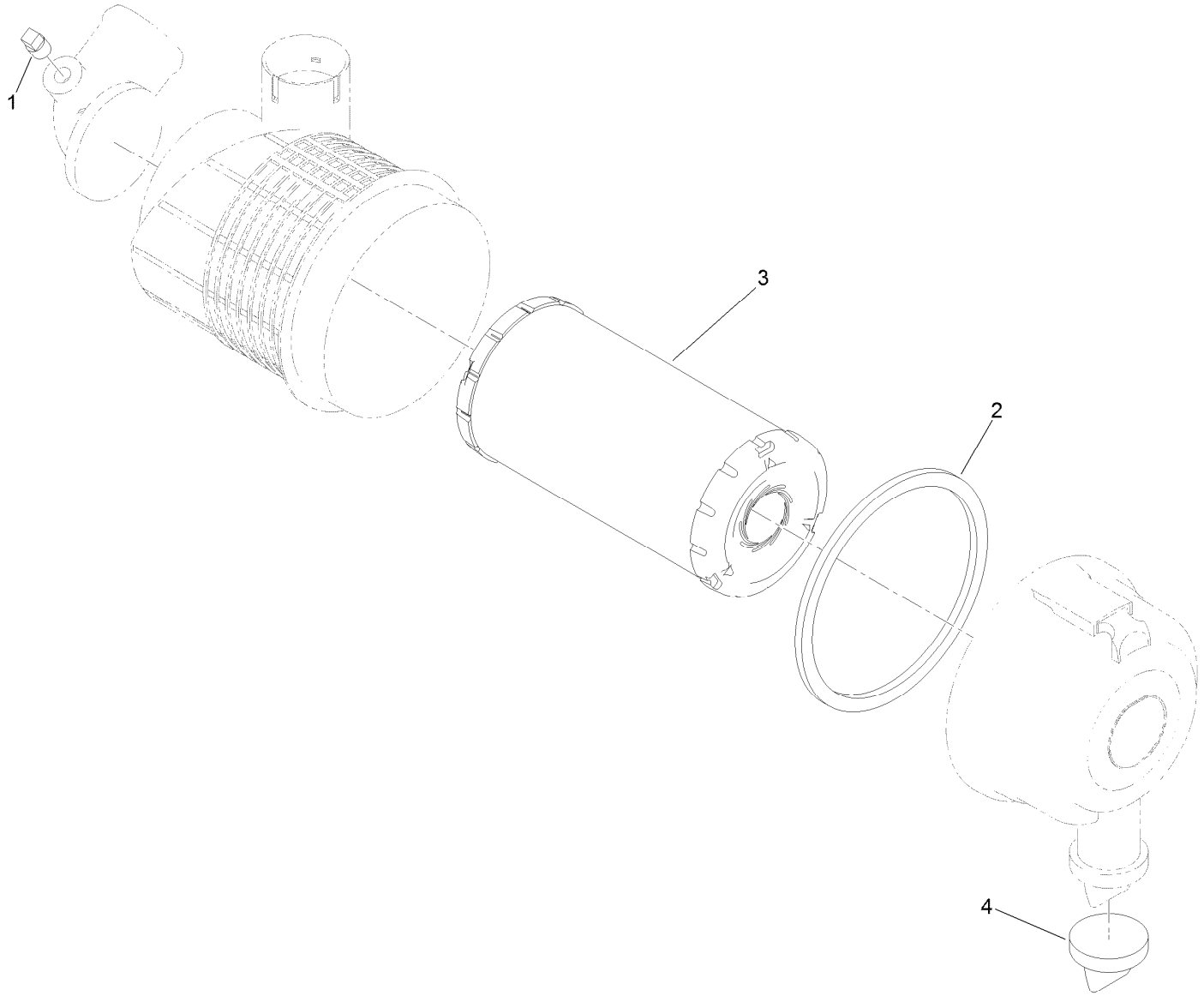

Air Cleaner Assembly No. 119-9714

Ref.	*Part Number*	*Qty.*	*Description*
1	285-17	1	Plug-Pipe
2	106-6748	1	Gasket
3	108-3811	1	Filter-Air
4	104-0498	1	Valve-Vacuator

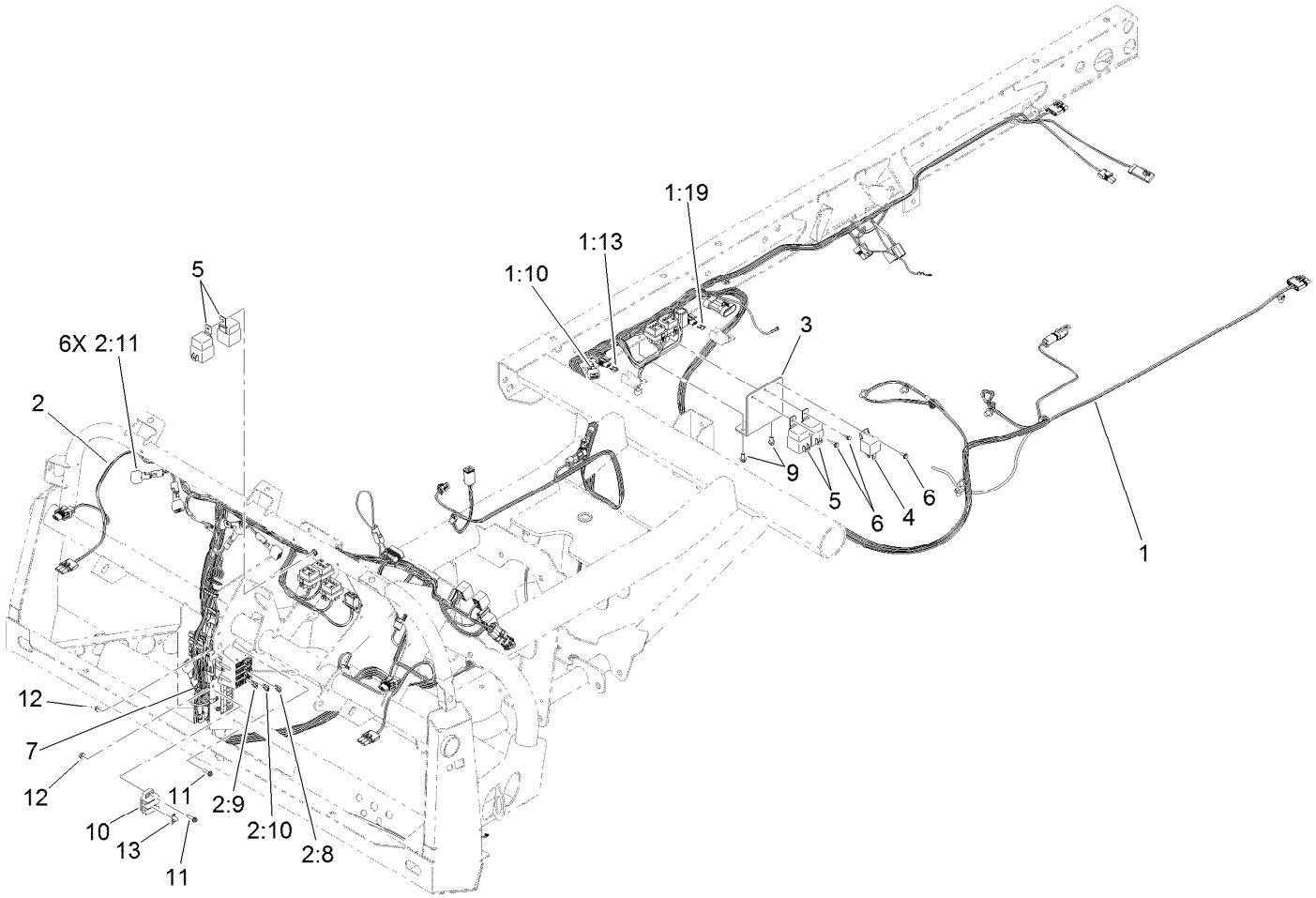

Electrical Assembly

Ref.	Part Number	Qty.	Description
1	122-0089	1	Harness-Wire, Rear
1:10	100-4918	1	Diode
1:13	121-8870	1	Fuse-Mini Blade, 30 Amp
1:19	121-8867	1	Fuse-Mini Blade, 15 Amp
2	122-0088	1	Harness-Wire, Front
2:8	121-8866	4	Fuse-Mini Blade, 10 Amp
2:9	121-8867	3	Fuse-Mini Blade, 15 Amp
2:10	121-8870	1	Fuse-Mini Blade, 30 Amp
2:11	100-4918	6	Diode
3	121-9893	1	Bracket-Relay

Ref.	Part Number	Qty.	Description
4	99-7435	1	Relay-Power
5	99-7430	4	Relay
6	32144-112	3	Screw-HWH
7	3290-379	1	Tie-Cable
9	32144-4	2	Screw-HWH
10	42862	1	Block-Terminal, Ground
11	32105-13	4	Screw-HWH
12	3290-148	4	Nut-HF
13	42863	1	Strip-Jumper

Attachments and Accessories

For 07390 Workman HDX-Auto Utility Vehicle

Product Name	Model/Part
Full Area Flatbed	07301
Full Area Flatbed Side Kit	07302
Fold Down Side Kit	07303
2/3 Area Flatbed	07321
2/3 Area Flatbed Side Kit	07322
Bed Liner	07331
Cab	07339
1/3 Area Flatbed	07341
1/3 Area Platform Lift	07347
Heater Kit	07349
Canopy	07372
Windshield	07373
Cab Door Kit	07375
Solid Window Cab Door Kit	07376
4 Post Roll-Over Protection System	07378
4-Wheel Drive Kit	07391
High Range Lockout Kit, 2015 and after Workman HDX-Auto Utility Vehicle	07394
High-Flow Hydraulics Kit	07395
Hand Throttle Kit	07420
Premium All Season Hydraulic Fluid (55 Gallon Drum)	108-1177
Premium All Season Hydraulic Fluid (5 Gallon Pail)	108-1178
Premium Transmission/Hydraulic Tractor Fluid (55 Gallon Drum)	108-1183
Premium Transmission/Hydraulic Tractor Fluid (5 Gallon Pail)	108-1184
Premium All Purpose Grease (Tube)	108-1190
Premium All Season Gear Lube (Quart)	108-1590
Filter-Oil	108-3847
Remote Hydraulics Manifold Kit	110-2626
Tire-Rear, 24x13-12	110-5132
Wheel-12in x 8.0in	114-8260
Side Mirror Kit	115-7849
Roll-Over Protection System Signal Kit	117-4825
Worklight Kit	117-4827
Remote Hydraulic Float Kit	117-4828
Cab Mirror Kit	117-4830
Receiver Hitch Kit	117-4831
Trailer Signal Kit	117-4836
24x13-12 Tire and Wheel ASM	117-4838
Manual 4-Wheel Drive Control Kit	119-0817
Canopy for Four-Post Roll-Over Protection System Kit	119-9457
Road Light and Homologation Kit	120-5030
Brake and Signal Light Kit	120-5045
Premium Engine Oil 10w30 (55 Gal)	121-6392
Premium Engine Oil 10w30 (5 Gallon Pail)	121-6393
Trailer Brake Kit	125-0123
Backup Alarm Kit	127-8729
1/3 Area Cover Kit	127-8739

Attachments and Accessories (continued)

High Air Intake Kit	127-8740
MVP Kit 400 Hour Filter Kit	131-8276
Multi Pro WM Turf Sprayer	41240
Spreader Base Unit	41253
Vicon Spreader	41256
Topdresser 1800	44225
Core Harvester Adapter Kit	44242
Pro Force Debris Blower	44538
Road-Ready Pro Force Debris Blower	44539
ProPass 200 Top Dresser with Twin Spinner and Wireless Control	44700
ProPass 200 Top Dresser with Twin Spinner	44701
Automatic Tailgate Release Kit	92-1220
Fuse Block	92-2641
Topdresser 1800 Lift Kit	92-4452
Spark Arrestor Screen	94-8157
Tire-Rear, 23x8.50-12	98-2993
Tire-Rear, Industrial	99-1091

For 07390H Workman HDX-Auto Utility Vehicle

Product Name	Model/Part
Full Area Flatbed	07301
Full Area Flatbed Side Kit	07302
Fold Down Side Kit	07303
2/3 Area Flatbed	07321
2/3 Area Flatbed Side Kit	07322
Bed Liner	07331
Cab	07339
1/3 Area Flatbed	07341
1/3 Area Platform Lift	07347
Heater Kit	07349
Canopy	07372
Windshield	07373
Cab Door Kit	07375
Solid Window Cab Door Kit	07376
4 Post Roll-Over Protection System	07378
4-Wheel Drive Kit	07391
High Range Lockout Kit, 2015 and after Workman HDX-Auto Utility Vehicle	07394
High-Flow Hydraulics Kit	07395
Hand Throttle Kit	07420
Premium All Season Hydraulic Fluid (55 Gallon Drum)	108-1177
Premium All Season Hydraulic Fluid (5 Gallon Pail)	108-1178
Premium Transmission/Hydraulic Tractor Fluid (55 Gallon Drum)	108-1183
Premium Transmission/Hydraulic Tractor Fluid (5 Gallon Pail)	108-1184
Premium All Purpose Grease (Tube)	108-1190
Premium All Season Gear Lube (Quart)	108-1590
Filter-Oil	108-3847
Remote Hydraulics Manifold Kit	110-2626

Attachments and Accessories (continued)

Tire-Rear, 24x13-12	110-5132
Wheel-12in x 8.0in	114-8260
Side Mirror Kit	115-7849
Roll-Over Protection System Signal Kit	117-4825
Worklight Kit	117-4827
Remote Hydraulic Float Kit	117-4828
Cab Mirror Kit	117-4830
Receiver Hitch Kit	117-4831
Trailer Signal Kit	117-4836
24x13-12 Tire and Wheel ASM	117-4838
Manual 4-Wheel Drive Control Kit	119-0817
Canopy for Four-Post Roll-Over Protection System Kit	119-9457
Road Light and Homologation Kit	120-5030
Brake and Signal Light Kit	120-5045
Premium Engine Oil 10w30 (55 Gal)	121-6392
Premium Engine Oil 10w30 (5 Gallon Pail)	121-6393
Trailer Brake Kit	125-0123
Backup Alarm Kit	127-8729
1/3 Area Cover Kit	127-8739
High Air Intake Kit	127-8740
MVP Kit 400 Hour Filter Kit	131-8276
Multi Pro WM Turf Sprayer	41240
Spreader Base Unit	41253
Vicon Spreader	41256
Topdresser 1800	44225
Core Harvester Adapter Kit	44242
Pro Force Debris Blower	44538
Road-Ready Pro Force Debris Blower	44539
ProPass 200 Top Dresser with Twin Spinner and Wireless Control	44700
ProPass 200 Top Dresser with Twin Spinner	44701
Automatic Tailgate Release Kit	92-1220
Fuse Block	92-2641
Topdresser 1800 Lift Kit	92-4452
Spark Arrestor Screen	94-8157
Tire-Rear, 23x8.50-12	98-2993
Tire-Rear, Industrial	99-1091

Notes:

Notes:

Notes:

TORO®

Count on it.