Form No. 3381-971 Rev C

TORO®

Count on it.

Parts Catalog

Groundsmaster® 4100 Rotary Mower

Model No. 30604—Serial No. 314000001 and Up

Register at www.Toro.com.
Original Instructions (EN)

CE

3381-971 C

Ordering Replacement Parts

To order replacement parts, please supply the part number, the quantity, and the description of each part desired.

Understanding Reference Numbers

Each identified part in an illustration has a reference number. The reference number for a part also appears in the parts list, along with other information about the part.

This catalog uses two special reference number formats, one to indicate parts in a service assembly and another to indicate the quantity of a given part in an illustration.

Service Assembly Reference Numbers

Parts in service assemblies have reference numbers in the form a:b. The a represents the reference number of the entire service assembly and the b represents a sequential number unique to each part within the service assembly.

For example, a wheel assembly might be identified by reference number 6, the tire by 6:1, the valve by 6:2, and the wheel by 6:3. When you order the assembly identified by reference number 6, you receive all parts identified by reference numbers 6:1,6:2, and 6:3. However, you may also order any part individually. Reference numbers of this type appear in illustration and in parts lists.

Reference Numbers Indicating Quantity

In an illustration, if a reference number indicates more than one part, the reference number has the form nX y. The n represents the quantity of the part, the X is the multiplication symbol, and the y represents the reference number.

For example, in an illustration, the reference number 2X 37 means that two of the parts identified by reference number 37 are indicated.

Contents

Front Frame and Steering Assembly . . . 5
Planetary Assembly No. 105-4500 . . . 7
LH Brake Assembly No. 100-3070-03 . . . 8
RH Brake Assembly No. 100-3069-03 . . . 9
Roll-Over Protection System, Rear Cover and Battery Assembly . . . 10
Frame and Bumper Assembly . . . 11
Radiator Assembly . . . 12
Flywheel, Motor Mount and Compressor Assembly . . . 14
Fan Mounting and Hardlines Assembly . . . 15
Hydraulic Motor Assembly No. 117-4769 . . . 16
Engine, Intake and Exhaust Assembly . . . 17
Piston Pump and Gear Pump Assembly . . . 18
Piston Pump Assembly No. 120-9059 . . . 20
Four-Section Gear Pump Assembly No. 120-8906 . . . 22
Combination Manifold Assembly . . . 23
Combination Manifold Assembly No. 120-8842 . . . 24
Manifold Block Assembly . . . 26
Left Power-Take-Off Manifold Assembly No. 121-1536 . . . 28
Rear Traction Manifold Assembly No. 121-1530 . . . 29
Center and Right Power-Take-Off Manifold Assembly No. 121-1537 . . . 30
Drive Motor, Steer Valve and Filter Head Assembly . . . 31
Hydraulic Motor Assembly No. 120-8913 . . . 32
Steering Valve Assembly No. 130-7949 . . . 33
Lift, Steer and Fan Hydraulic Assembly . . . 34
Oil Cooler Hydraulic Assembly . . . 36
Hydraulic Reservoir Assembly . . . 38
Traction Hydraulic Assembly . . . 39
Rear Axle and Steering Cylinder Assembly . . . 40
Bevel Pinion Shaft Assembly Rear Axle Assembly No. 110-4750 . . . 42
Differential Assembly Rear Axle Assembly No. 110-4750 . . . 43
Axle Support Assembly Rear Axle Assembly No. 110-4750 . . . 44
Bevel Gear Case Assembly Rear Axle Assembly No. 110-4750 . . . 45
Bevel Gear Shaft Assembly Rear Axle Assembly No. 110-4750 . . . 46
Axle Case Assembly Rear Axle Assembly No. 110-4750 . . . 47
Axle Assembly Rear Axle Assembly No. 110-4750 . . . 48
Hydraulic Motor Assembly No. 120-8814 . . . 49
Steering Cylinder Assembly No. 121-1534 . . . 50
Hydraulic Fitting Assembly . . . 51
Hose and Tube Routing Assembly . . . 52
Fuel Tank and Air Cleaner Assembly . . . 53
Air Cleaner Assembly No. 99-5410 . . . 54
Hood and Screen Assembly . . . 55
Fuel / Water Seperator Assembly . . . 56
Traction Pedal Assembly . . . 57
Brake Pedal Assembly . . . 59
Seat Base and Seat Assembly . . . 60
Air Ride Seat Suspension Assembly No. 108-1488 . . . 62
Vinyl Premium Seat Assembly No. 117-5676 . . . 64
Parking Brake, Steering Tower and Power Center Assembly . . . 65
Fender, Tool Box and Cover Assembly . . . 66
Fender and Step Support Assembly . . . 67
Front Deck Lift-Arm Assembly . . . 68
Hydraulic Motor Assembly No. 127-3694 . . . 70
Hydraulic Cylinder Assembly No. 120-8822 . . . 71

© 2018—The Toro® Company

8111 Lyndale Avenue South
Bloomington, MN 55420

Contact us at www.Toro.com.
Printed in the USA.

All Rights Reserved

Contents (continued)

Front Deck Hose Routing Assembly . . . 72
Front Deck Hydraulic Fitting Assembly . . . 74
Platform Harness and Fuse Assembly . . . 75
Rear Wire Harness Assembly . . . 76
Battery Cable and Grounds Assembly . . . 77
Engine Harness Assembly . . . 78
Arm-Rest Control Panel Assembly . . . 79
Arm-Rest Plug Assembly . . . 80
Center Deck Assembly . . . 81
Low Driven Spindle Assembly No. 119-4776 . . . 83
Wing Lift Cylinder Assembly No. 107-0190 . . . 84
High Driven Spindle Assembly No. 119-4549 . . . 85
Right Hand and Left Hand Deck Installation Assembly . . . 86
Caster Wheel Assembly . . . 88
Spindle and Blade Assembly . . . 90
Driving Spindle Assembly No. 119-4547 . . . 91
Double Driven Spindle Assembly No. 119-5298 . . . 92
Deck Cover Assembly . . . 93
Rear Discharge Baffle Assembly . . . 94
Cylinder Block Assembly . . . 95
Gear Housing Assembly . . . 96
Flywheel Housing and Oil Sump Assembly . . . 97
Cylinder Head and Bonnet Assembly . . . 98
Suction Manifold Assembly . . . 100
Exhaust Manifold and Silencer Assembly . . . 101
Camshaft and Driving Gear Assembly . . . 102
Turbine Assembly . . . 103
Crankshaft and Piston Assembly . . . 104
Lubrication and Oil System Assembly . . . 105
Lubrication Oil Line Assembly . . . 106
Cooling Water System Assembly . . . 107
Fuel Injection Pump Assembly . . . 108
Governor Assembly . . . 110
Fuel Injection Valve Assembly . . . 111
Starting Motor Assembly . . . 112
Generator Assembly . . . 113
Electronic Control Unit Assembly . . . 114
Gasket Set . . . 115
Attachments and Accessories . . . 116

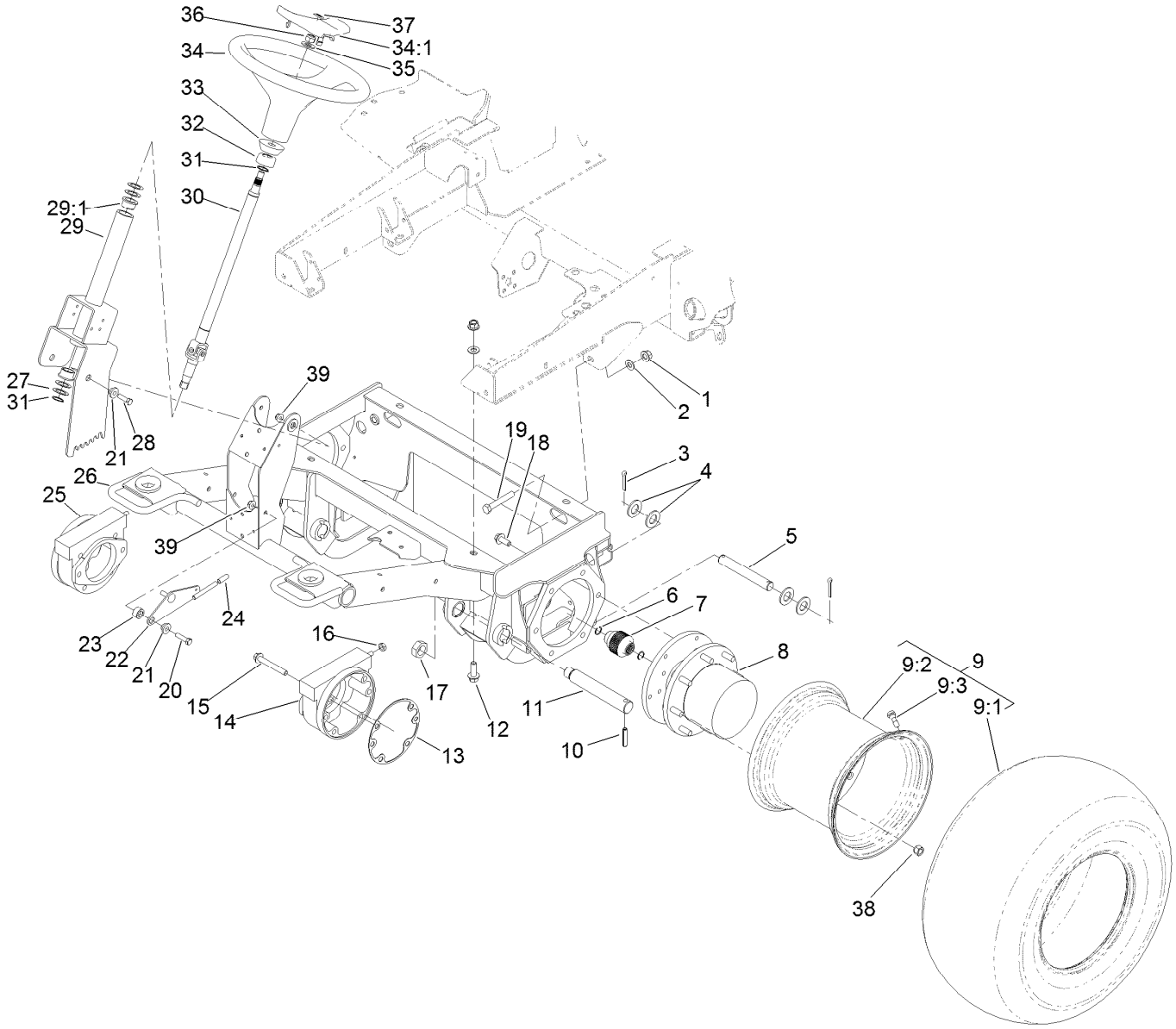

Front Frame and Steering Assembly

Ref.	Part Number	Qty.	Description
1	99-5107	6	Nut-Lock
2	3256-26	6	Washer-Flat
3	3272-30	4	Pin-Cotter
4	3256-29	8	Washer-Flat
5	110-6006	2	Pin-Clevis
6	93-7972	4	Ring-Retaining, Internal
7	100-3046	2	Shaft-Brake, Splined
8	105-4500	2	Planetary ASM
9		2	Wheel And Tire ASM ●
9:1	119-8313	1	Tire
9:2	120-4175	1	Rim
9:3	232-27	1	Stem-Valve
10	32121-110	2	Pin-Roll, Slotted
11	100-3017	2	Pin-Arm, Lift
12	100-6116	4	Screw-HHF
13	93-7984	2	Gasket
14	100-3070-03	1	Brake ASM
15	33106-090	8	Screw-HHF
16	3218-4	2	Nut-Jam
17	3296-49	2	Nut-Lock, NI
18	33106-030	12	Screw-HHF
19	325-13	2	Screw-HH
20	323-8	1	Screw-HH
21	93-5988	3	Hub-Pivot
22	114-5907-03	1	Lever-Tilt
23	114-4854	1	Spacer-Cup
24	93-5446	1	Cap-Vinyl
25	100-3069-03	1	Brake ASM
26	120-4085-03	1	Frame-Front
27	9547	4	Washer-Thrust
28	323-7	2	Screw-HH
29	114-0167	1	Steering Column ASM
29:1	256-132	2	Bushing-Flange
30	93-5428	1	Shaft-Steering
31	32151-29	2	Ring-Retaining
32	93-5439	1	Seal-Steering

● Not serviced separately

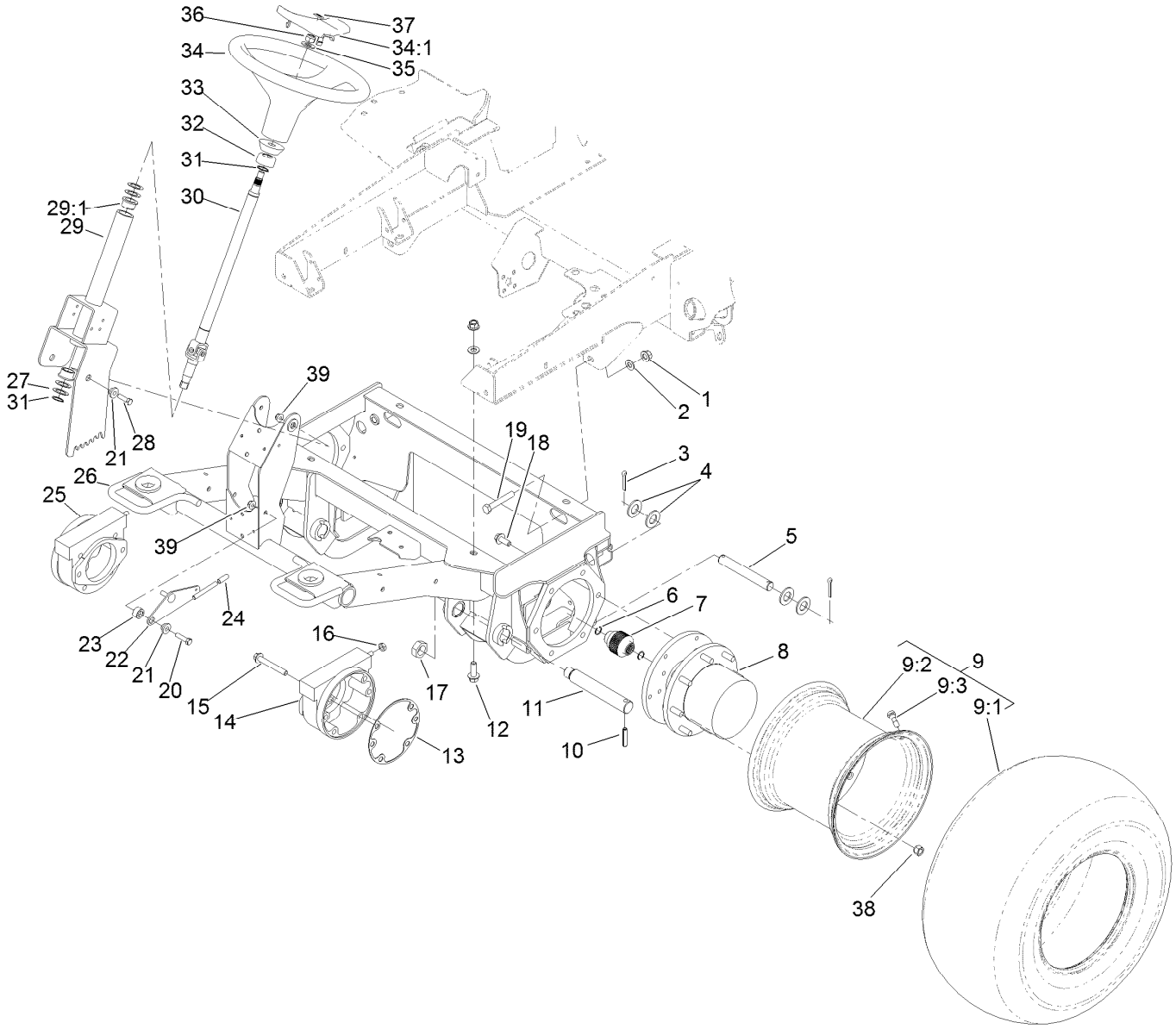

Front Frame and Steering Assembly (continued)

Ref.	Part Number	Qty.	Description
33	93-5429	1	Collar-Foam
34	98-1471	1	Wheel-Steering
34:1	98-1468	1	Cover-Wheel, Steering
35	3256-27	1	Washer-Flat

Ref.	Part Number	Qty.	Description
36	108-9342	1	Nut-Hex
37	98-1459	1	Decal
38	242-50	16	Nut-Lug
39	104-8301	3	Nut-HF, NI

● Not serviced separately

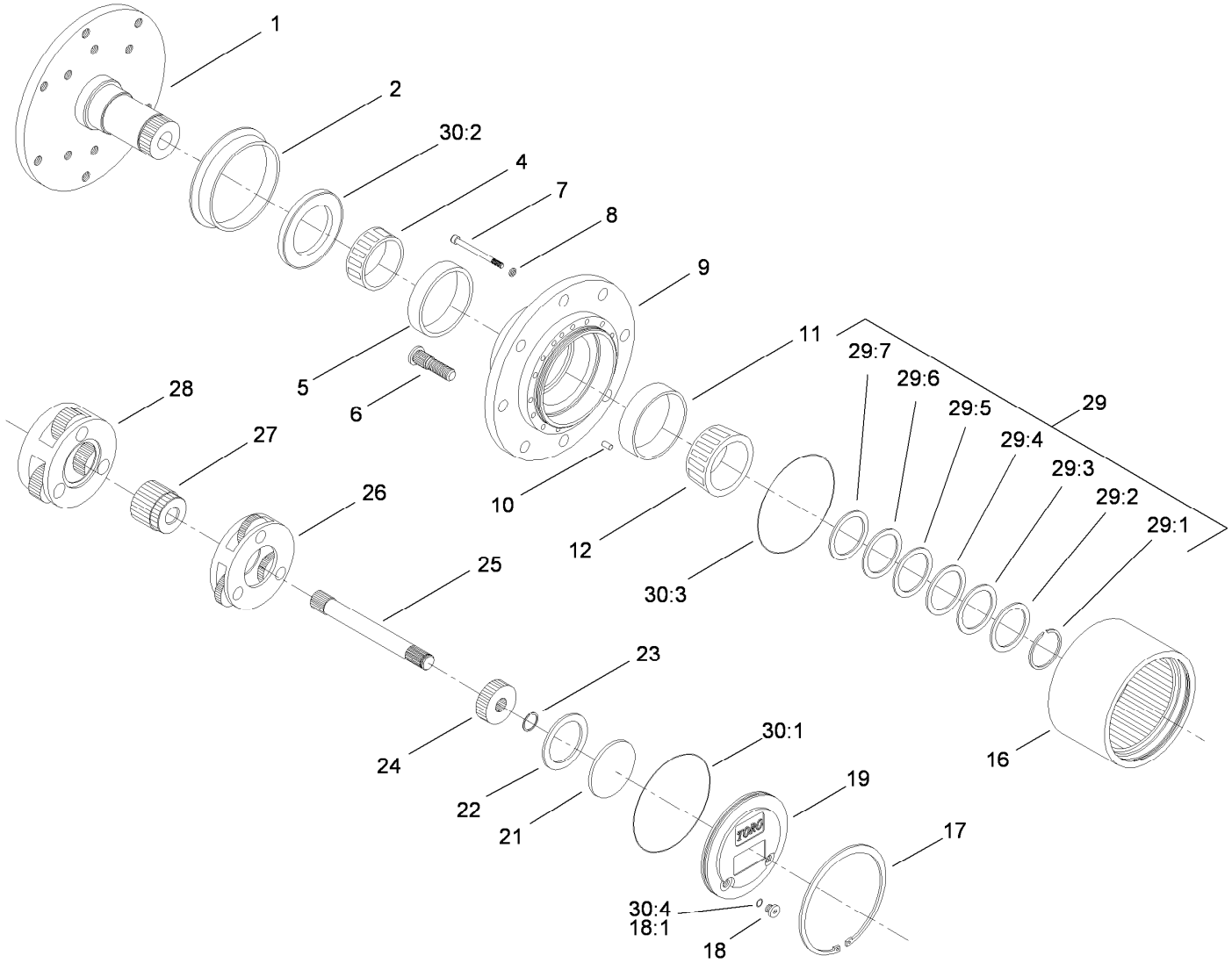

Planetary Assembly No. 105-4500

Ref.	Part Number	Qty.	Description
1		1	Spindle ■
2	105-8122	1	Seal-Boot
4	105-8120	1	Bearing-Cone
5	105-8119	1	Bearing-Cup
6	105-8124	8	Stud-Wheel
7	105-8125	16	Bolt-Head, Socket
8	3253-18	16	Washer-Lock
9		1	Housing ■
10	105-8121	1	Pin-Dowel
11	105-8117	1	Bearing-Cup
12	105-8118	1	Bearing-Cone
16	105-8113	1	Gear-Ring
17	105-8132	1	Ring-Retaining
18	353-990	2	Plug ASM
18:1	237-78	1	O-Ring
19	105-8138	1	Cap-End
21	105-8133	1	Plug-Thrust
22	105-8123	1	Washer-Thrust
23	105-8131	1	Ring-Retaining

● Not illustrated

Ref.	Part Number	Qty.	Description
24	105-8114	1	Gear-Primary
25	105-8115	1	Shaft-Drive
26	105-8129	1	Carrier-Primary
27	105-8139	1	Gear-Secondary
28	105-8130	1	Carrier-Secondary
29	105-8136	1	Shim Kit
29:1		1	Ring-Snap ■
29:2		1	Shim-Bearing, 2.9Mm ■
29:3		1	Shim-Bearing, 2.8Mm ■
29:4		1	Shim-Bearing, 2.7Mm ■
29:5		1	Shim-Bearing, 2.6Mm ■
29:6		1	Shim-Bearing, 2.5Mm ■
29:7		1	Shim-Bearing, 2.4Mm ■
30	105-8137	1	Seal Kit ●
30:1		1	O Ring-Flange Cap ■
30:2		1	Seal-Oil ■
30:3		2	O Ring-End Cap ■
30:4	237-78	2	O-Ring

■ Not serviced separately

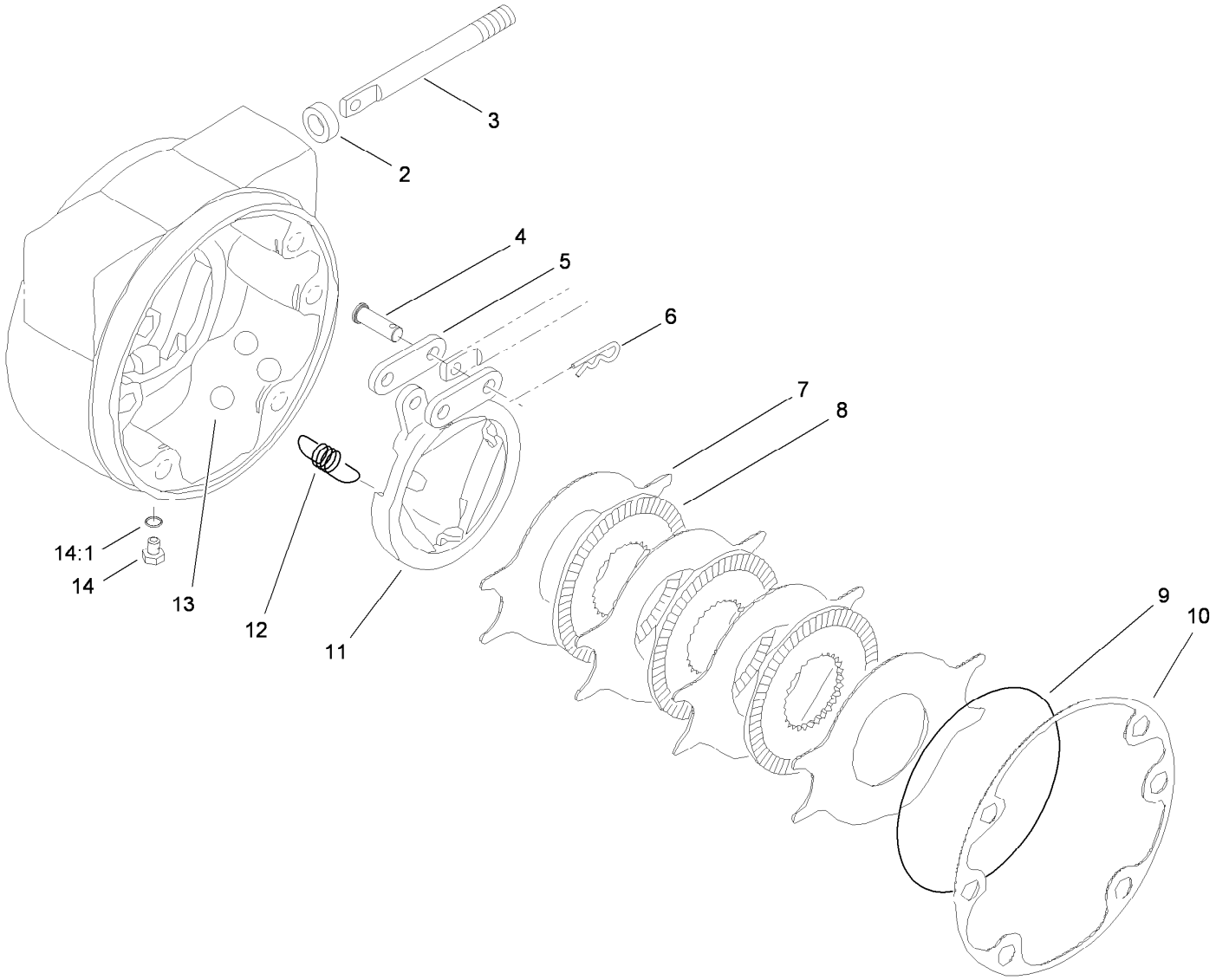

LH Brake Assembly No. 100-3070-03

Ref.	*Part Number*	*Qty.*	*Description*
2	93-7977	1	Seal
3	93-7978	1	Rod-Pull
4	93-7983	2	Pin-Clevis
5	93-7980	2	Link
6	93-7979	2	Pin-Hitch
7	93-7986	4	Disc-Stationary
8	104-4278	3	Disc-Rotating
9	93-7976	1	Ring-Retaining
10	93-7984	1	Gasket
11	104-4279	1	Actuator-Rotating
12	93-7987	3	Spring-Extension
13	93-7985	3	Ball
14	353-990	2	Plug ASM
14:1	237-78	1	O-Ring

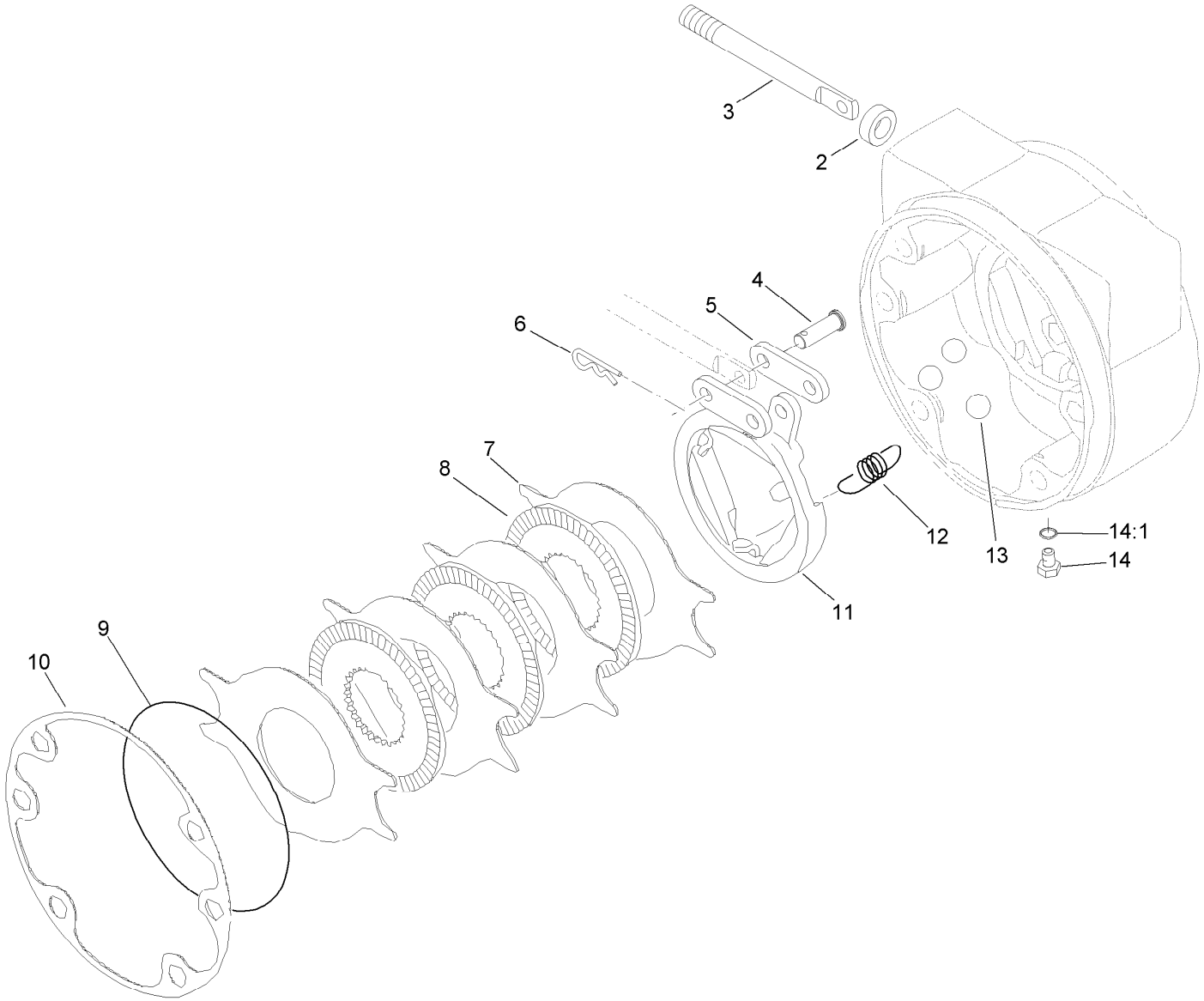

RH Brake Assembly No. 100-3069-03

Ref.	*Part Number*	*Qty.*	*Description*
2	93-7977	1	Seal
3	93-7978	1	Rod-Pull
4	93-7983	2	Pin-Clevis
5	93-7980	2	Link
6	93-7979	2	Pin-Hitch
7	93-7986	4	Disc-Stationary
8	104-4278	3	Disc-Rotating
9	93-7976	1	Ring-Retaining
10	93-7984	1	Gasket
11	104-4280	1	Actuator-Rotating
12	93-7987	3	Spring-Extension
13	93-7985	3	Ball
14	353-990	2	Plug ASM
14:1	237-78	1	O-Ring

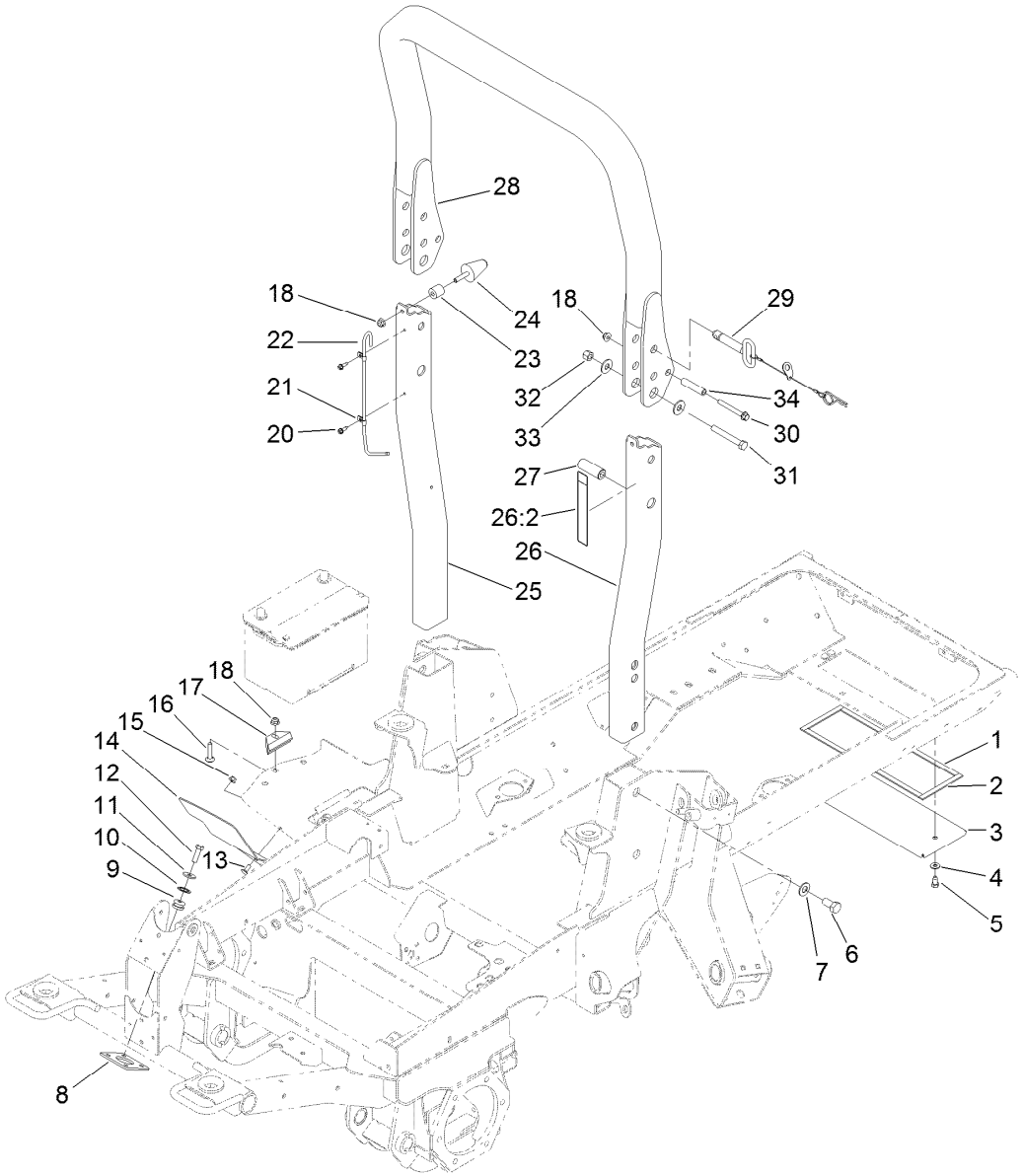

Roll-Over Protection System, Rear Cover and Battery Assembly

Ref.	Part Number	Qty.	Description
1	105-0777	2	Strip-Foam
2	105-0778	2	Strip-Foam
3	104-2287-03	1	Cover-Frame
4	3256-3	2	Washer-Flat
5	32104-6	2	Screw-HH, TAP
6	121-1658	4	Screw-HH
7	3256-27	4	Washer-Flat
8	120-4118-03	1	Plate-Mounting, Valve
9	63-9750	4	Mount
10	1-303352	4	Washer-Spindle
11	63-8410	4	Washer
12	33115-035	4	Screw-HH
13	3230-23	2	Screw-CARR
14	121-1512-03	1	Shield-Battery
15	104-8300	2	Nut-HF, NI
16	3231-5	1	Screw-CARR
17	66-2490	1	Retainer-Battery

Ref.	Part Number	Qty.	Description
18	104-8301	5	Nut-HF, NI
20	32104-95	2	Screw-HWH
21	2412-72	2	Clip-Closed, Insulated
22	121-1638	1	Tube-Vent
23	61-2220	2	Spacer
24	121-1604	2	Bumper-Rubber
25	121-1632-03	1	ROPS-Lower, RH
26	121-1744	1	Left ROPS ASM
26:2	120-8947	1	Decal-Danger, ROPS
27	121-1660	2	Spacer
28	121-1642	1	ROPS-Upper
29	121-1629	2	ROPS Fold Pin ASM
30	3234-41	2	Screw-HHF
31	325-35	2	Screw-HH
32	3296-23	2	Nut-Lock, NI
33	3256-6	4	Washer-Flat
34	106-0877	2	Spacer-Shield

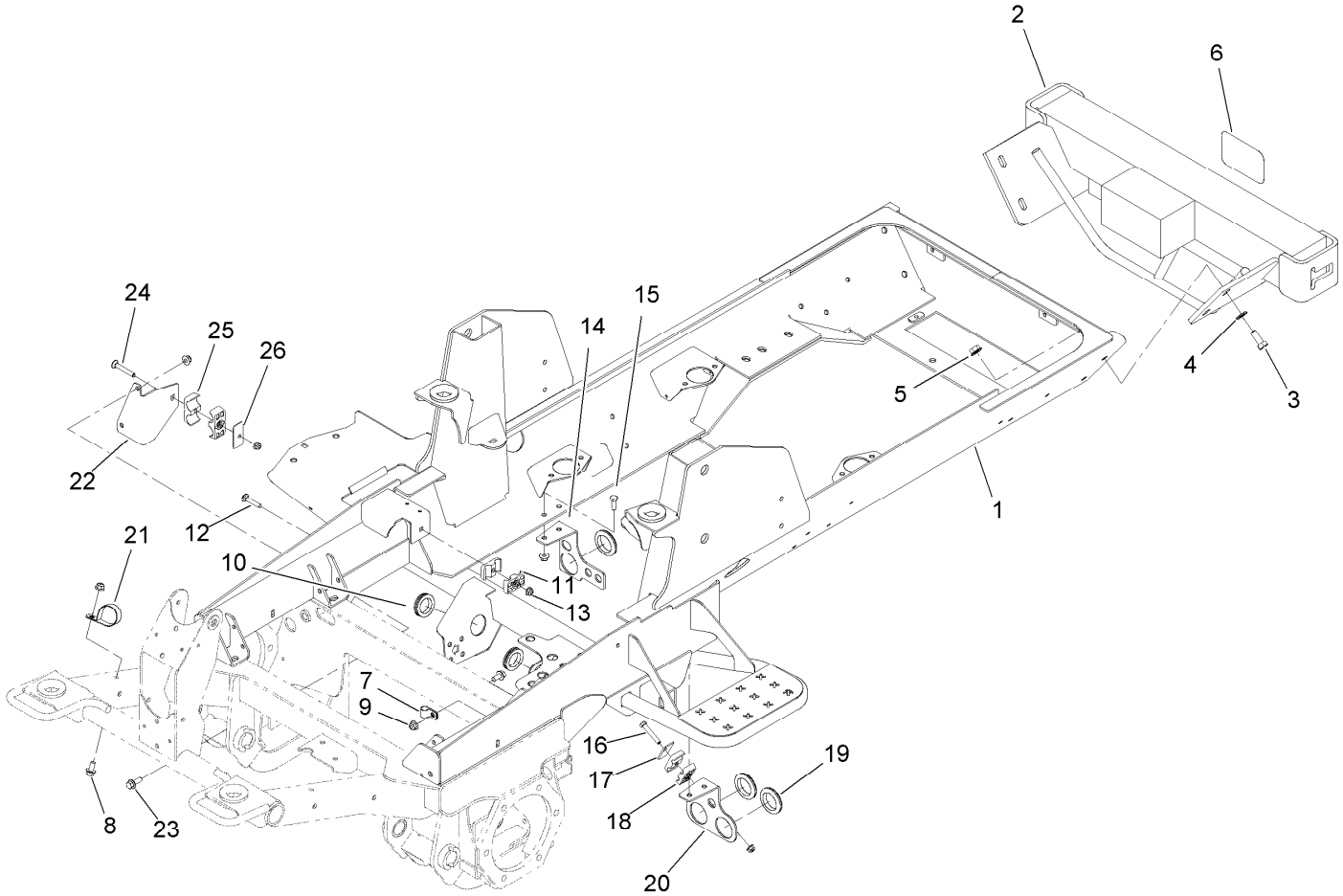

Frame and Bumper Assembly

Ref.	Part Number	Qty.	Description
1	120-4110-03	1	Frame
2	106-4278-03	1	Bumper
3	325-5	4	Screw-HH
4	3256-26	4	Washer-Flat
5	32128-23	4	Nut-HF
6	105-8278	1	Decal
7	2412-138	1	R-Clamp
8	3234-1	2	Screw-HHF
9	104-8301	8	Nut-HF, NI
10	240-7	2	Grommet-Rubber
11	56-7971	2	Clamp-Tube
12	3230-5	1	Screw-CARR
13	104-8300	3	Nut-HF, NI

Ref.	Part Number	Qty.	Description
14	121-1508-03	1	Bracket-Bulkhead
15	323-6	4	Screw-HH
16	322-10	1	Screw-HH
17	69-9760	1	Coverplate
18	56-7976	2	Clamp-Tube
19	240-2	3	Grommet-Rubber
20	121-1481-03	1	Plate-Mount, Bulkhead (LH)
21	2412-147	1	Clamp-R
22	120-9086-03	1	Plate-Mount, Tube
23	3234-11	2	Screw-HHF
24	3230-7	1	Bolt-CARR
25	56-7974	2	Clamp-Tube
26	69-9761	1	Plate-Cover

Radiator Assembly

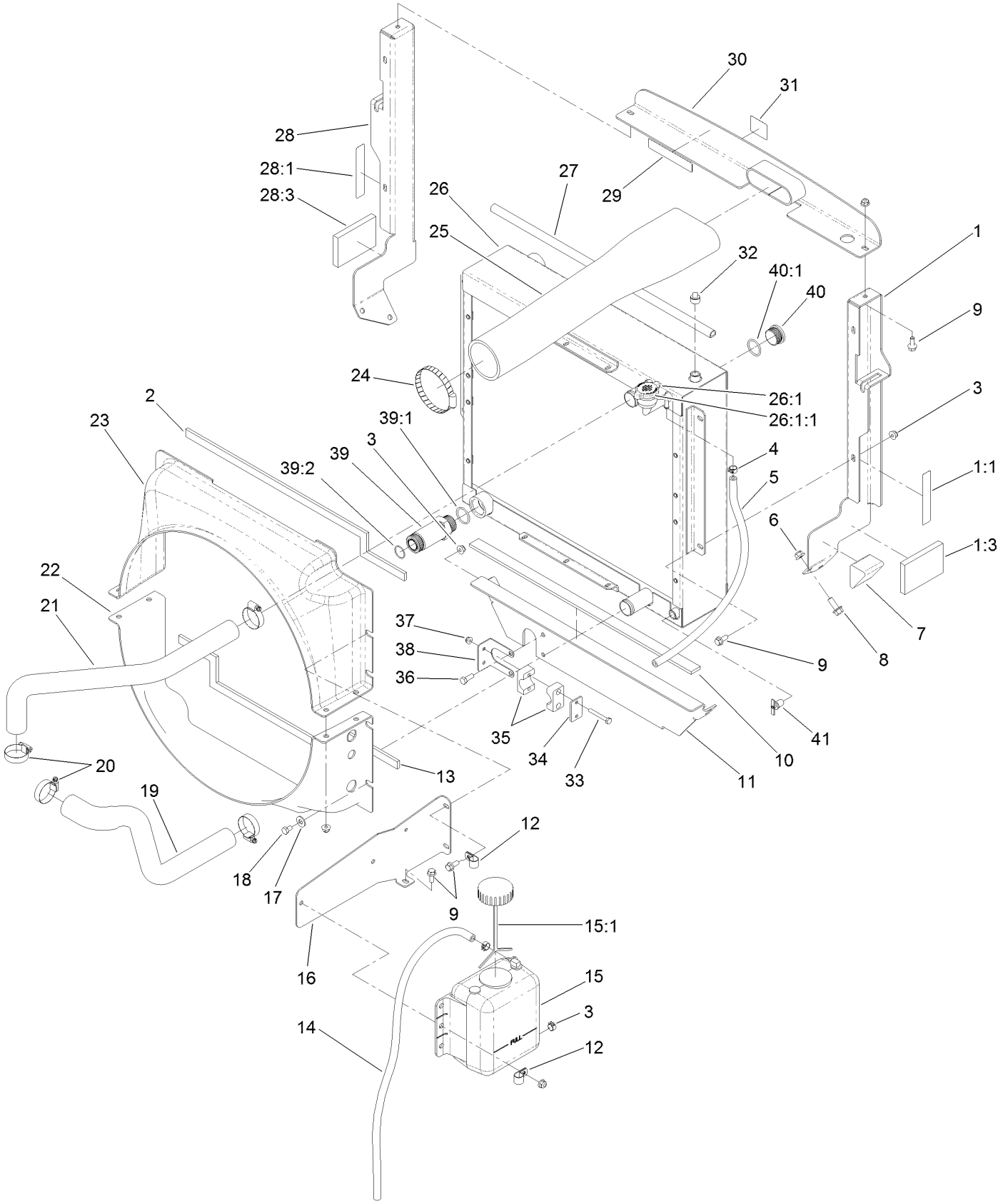

Radiator Assembly (continued)

Ref.	Part Number	Qty.	Description
1	121-1479	1	LH Radiator Support ASM
1:1	93-7272	1	Decal-Warning
1:3	100-2196	1	Pad-Foam
2	121-1684	1	Foam-Radiator
3	104-8300	12	Nut-HF, NI
4	92-2379	3	Clamp-Hose
5	110-4112	1	Hose-Fuel
6	104-8301	6	Nut-HF, NI
7	93-5954	2	Plug-Foam
8	3234-11	6	Screw-HHF
9	3234-47	13	Screw-HHF
10	104-2226	1	Strip-Foam
11	120-8968-03	1	Bracket-Hose
12	92-6064	2	Clamp-R
13	121-1685	1	Foam-Radiator, Lower
14	110-9662	1	Hose-Fuel
15	120-5571	1	Coolant Reservoir ASM
15:1	87-7050	1	Cap-Reservoir
16	120-8921-03	1	Mount-Tank
17	3256-3	7	Washer-Flat
18	322-1	6	Screw-HH
19	121-1746	1	Hose-Radiator, Lower
20	2412-111	4	Clamp
21	121-1747	1	Hose-Radiator, Upper
22	121-1517	1	Shroud-Radiator, Lower
23	121-1515	1	Shroud-Radiator, Upper

Ref.	Part Number	Qty.	Description
24	2412-110	1	Clamp-Band/Screw
25	121-1474	1	Hose-Inlet, Air Cleaner
26	121-3080	1	Radiator/Oil Cooler
26:1	115-7766	1	Cap-Radiator
26:1:1	106-6755	1	Decal-Cap, Radiator
27	114-3828	1	Seal-Bulb
28	121-1478	1	RH Radiator Support ASM
28:1	93-7272	1	Decal-Warning
28:3	100-2196	1	Pad-Foam
29	93-7272	1	Decal-Warning
30	120-9025-03	1	Bracket-Intake
31	93-7275	1	Decal-Fluid, Starting
32	281-13	1	Plug-Pipe
33	321-11	2	Screw-HH
34	114-4902	1	Plate-Cover
35	114-4901	1	Clamp
36	322-4	2	Screw-HH
37	104-7201	2	Nut-HF
38	120-8984	1	Bracket-Clamp
39	100-5565	1	Fitting-STR
39:1	237-146	1	O-Ring
39:2	340-65	1	O-Ring
40	106-2030	1	Plug-Hex, Hollow
40:1	237-146	1	O-Ring
41	304-46	1	Draincock

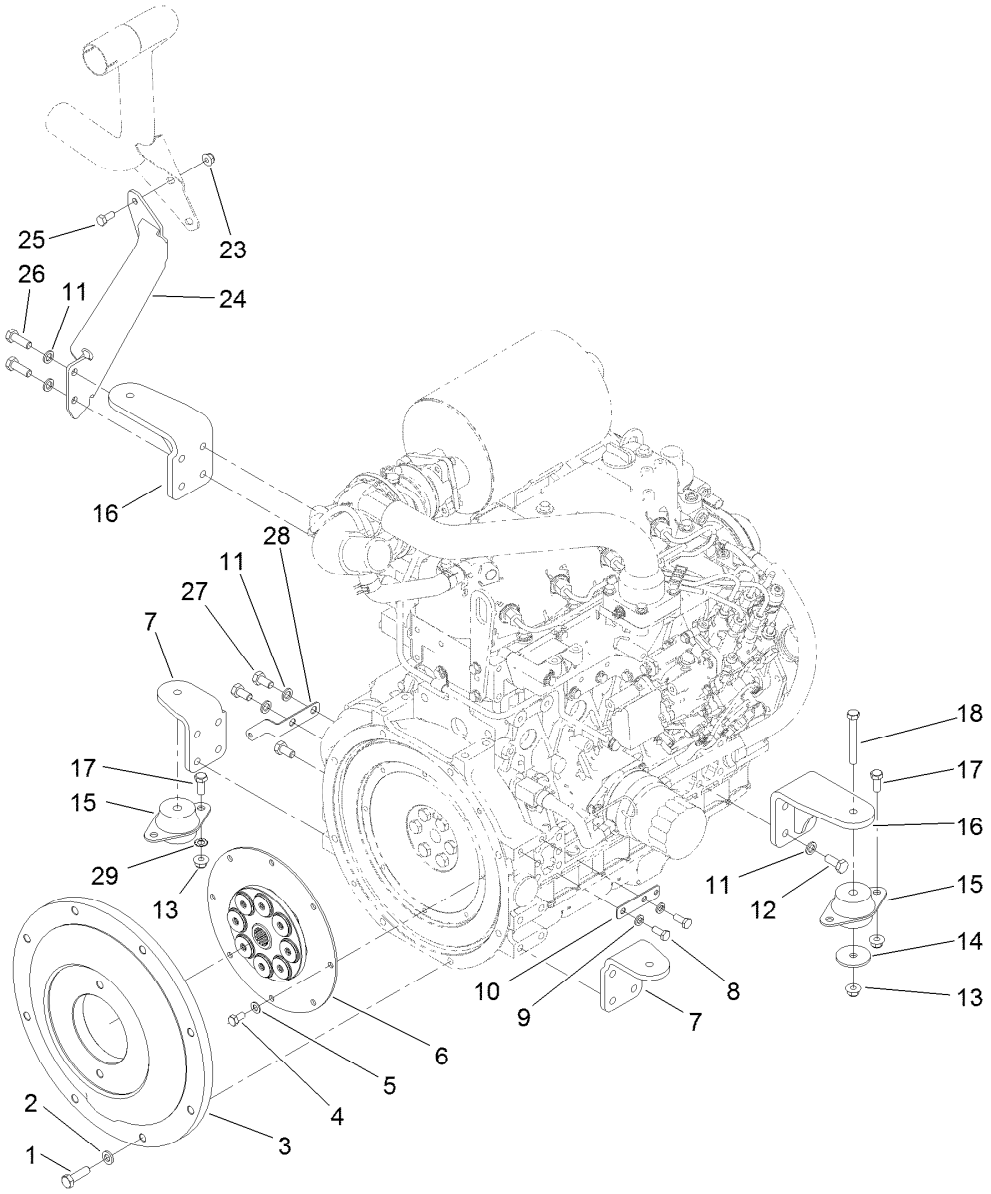

Flywheel, Motor Mount and Compressor Assembly

Ref.	Part Number	Qty.	Description
1	117-5663	8	Screw-HH
2	107-1413	8	Washer-Hardened
3	115-6657-03	1	Plate-Flywheel
4	99-5132	8	Bolt
5	87-7510	8	Washer-Flat
6	120-4176	1	Coupling-Spring, Flywheel
7	120-4066-03	2	Mount-Motor, Front
8	33114-020	2	Screw-HH
9	3253-4	2	Washer-Lock
10	121-5636	1	Tab-Harness
11	48-9590	18	Washer-Lock
12	33115-025	14	Screw-HH
13	104-8301	12	Nut-HF, NI

Ref.	Part Number	Qty.	Description
14	63-7400	4	Washer-Rebound
15	53-9682	4	Mount-Engine
16	120-4068-03	2	Mount-Motor
17	323-5	8	Screw-HH
18	323-14	4	Screw-HH
23	104-8300	2	Nut-HF, NI
24	121-1622-03	1	Bracket-Support
25	322-3	2	Screw-HH
26	33115-030	2	Screw-HH
27	33115-020	3	Screw-HH
28	121-6580	1	Bracket-Harness
29	3255-9	1	Washer-Lock

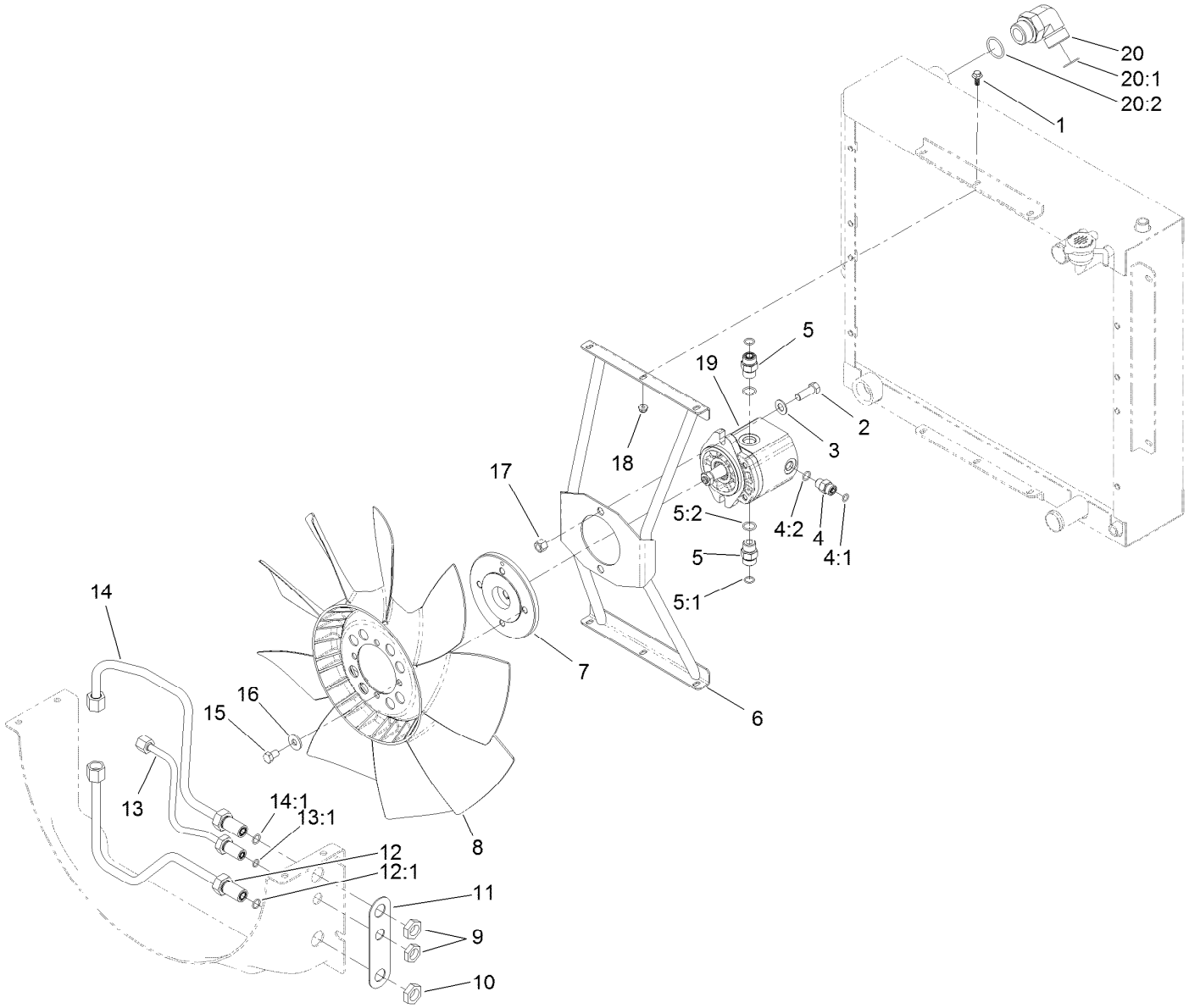

Fan Mounting and Hardlines Assembly

Ref.	Part Number	Qty.	Description
1	99-6810	6	Screw-HHF
2	324-5	2	Screw-HH
3	3256-25	2	Washer-Flat
4	340-2	1	Fitting-Straight
4:1	237-22	1	O-Ring
4:2	237-42	1	O-Ring
5	340-4	2	Fitting-STR
5:1	237-30	1	O-Ring
5:2	237-79	1	O-Ring
6	120-8935-03	1	Bracket-Fan
7	117-2364	1	Hub-Fan
8	114-3825	1	Fan
9	340-70	1	Nut-Lock
10	340-127	2	Nut-Bulkhead
11	121-1518	1	Shim-Support

Ref.	Part Number	Qty.	Description
12	121-1554	1	Tube-HYD
12:1	237-30	1	O-Ring
13	121-1555	1	Tube ASM
13:1	237-22	1	O-Ring
14	121-1553	1	Tube-HYD
14:1	237-30	1	O-Ring
15	115-8486	4	Screw-HH
16	80-6990	4	Washer-Hardened
17	3296-48	2	Nut-Lock, NI
18	104-7201	6	Nut-HF
19	117-4769	1	HYD Motor ASM
20	340-129	1	Fitting-Elbow, 90 DEG
20:1	237-146	1	O-Ring
20:2	340-65	1	O-Ring

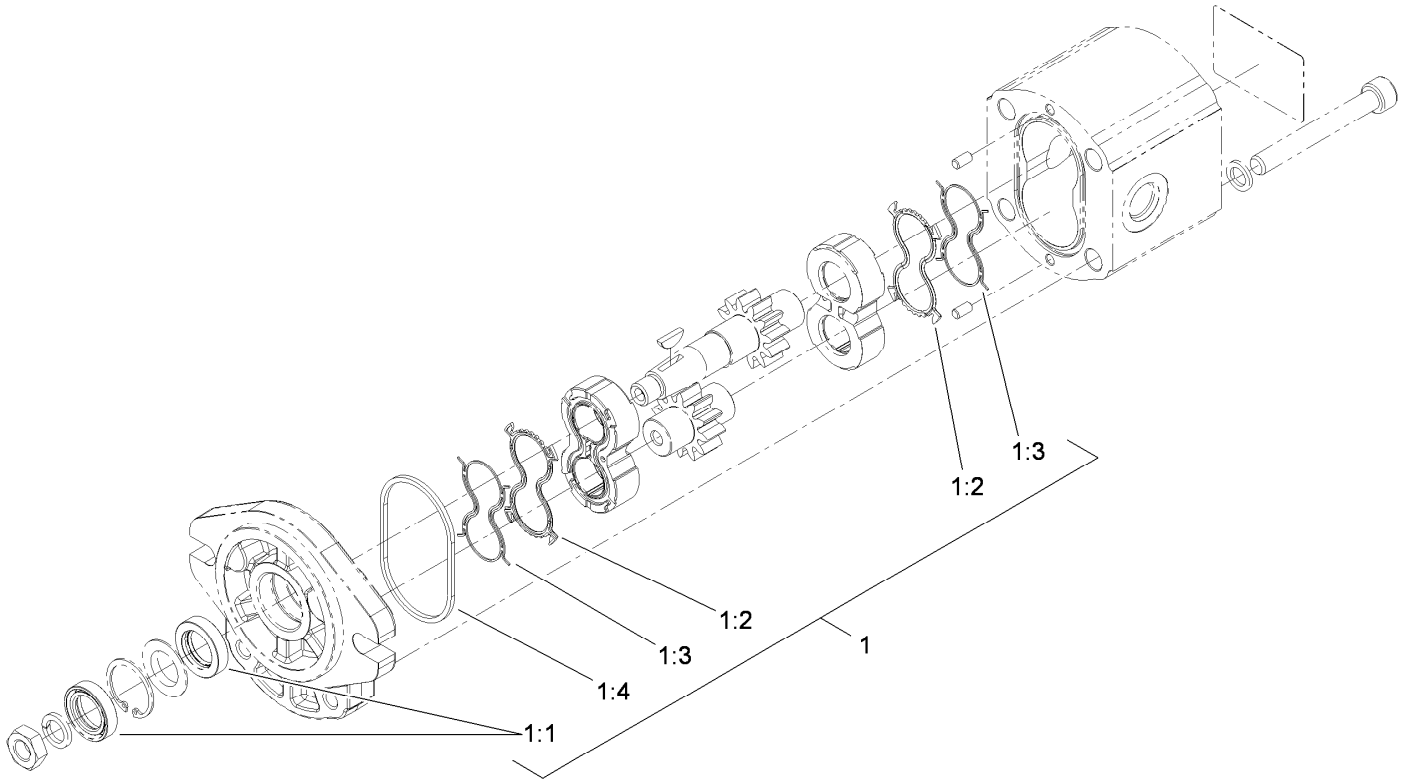

Hydraulic Motor Assembly No. 117-4769

Ref.	*Part Number*	*Qty.*	*Description*
1	115-4110	1	Seal Kit
1:1		2	Seal-Shaft ●
1:2		2	Seal-Plate, Balancing ●
1:3		2	Seal-Anti Extrusion ●
1:4		2	O-Ring (Housing) ●

● Not serviced separately

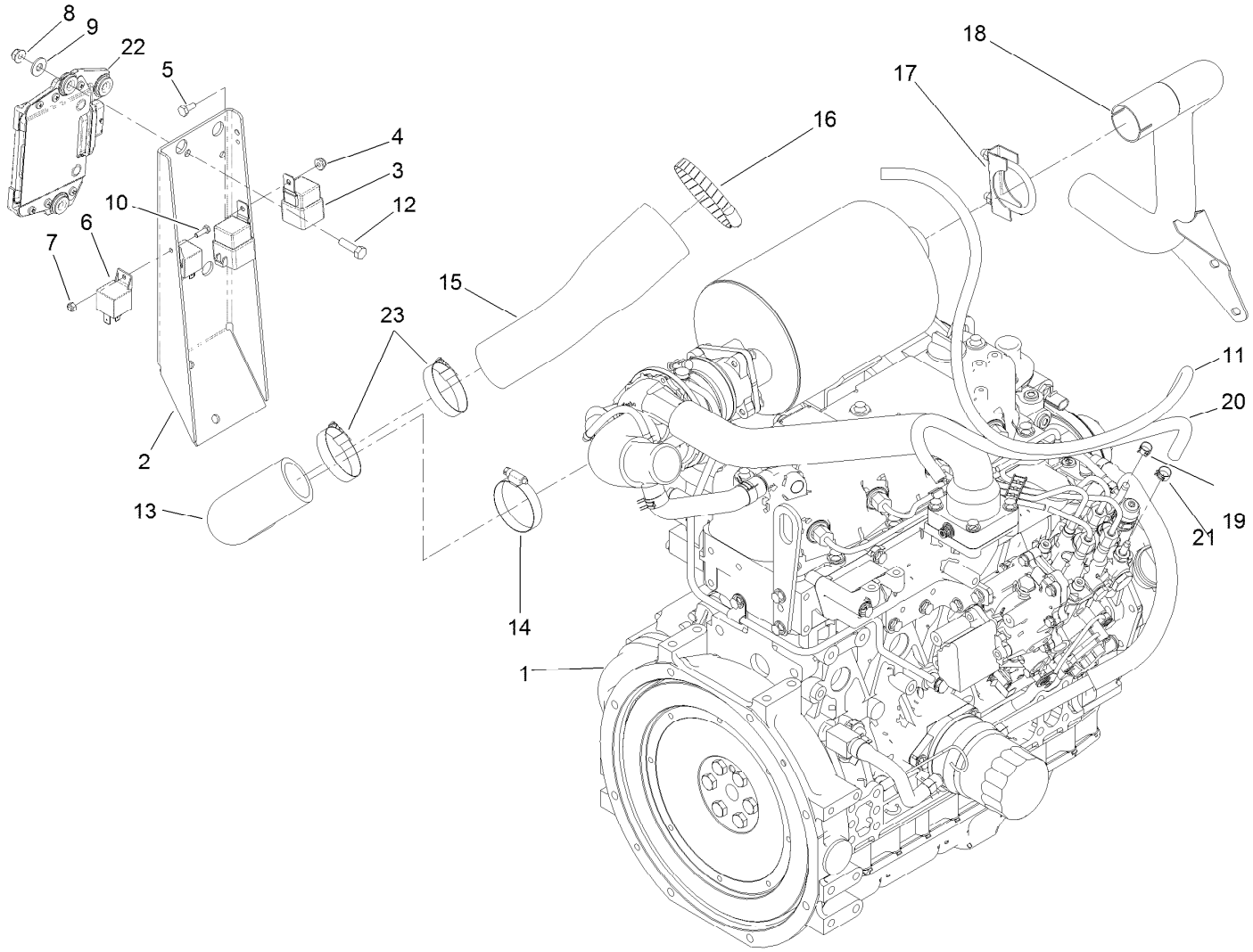

Engine, Intake and Exhaust Assembly

Ref.	Part Number	Qty.	Description
1	120-4112	1	Engine-Yanmar, T4I
2	120-8916-03	1	Mount-Controller
3	99-7430	2	Relay
4	104-7201	1	Nut-HF
5	321-3	1	Screw-HH
6	99-7435	2	Relay-Power
7	3296-2	1	Nut-Lock, NI
8	104-8300	3	Nut-HF, NI
9	3256-3	3	Washer-Flat
10	3290-134	1	Screw
11	110-5702	1	Hose-Fuel
12	322-16	3	Screw-HH

Ref.	Part Number	Qty.	Description
13	121-1589	1	Hose-Outlet, Air Cleaner
14	2412-130	1	Clamp-Hose
15	121-1590	1	Hose-Outlet, Air Cleaner
16	2412-110	1	Clamp-Band/Screw
17	18-2130	1	Clamp
18	121-1616	1	Pipe-Exhaust
19	2412-98	1	Clamp-Hose
20	108-3284	1	Hose-Fuel
21	92-2379	1	Clamp-Hose
22	121-1591	1	Controller-Engine
23	2412-130	2	Clamp-Hose

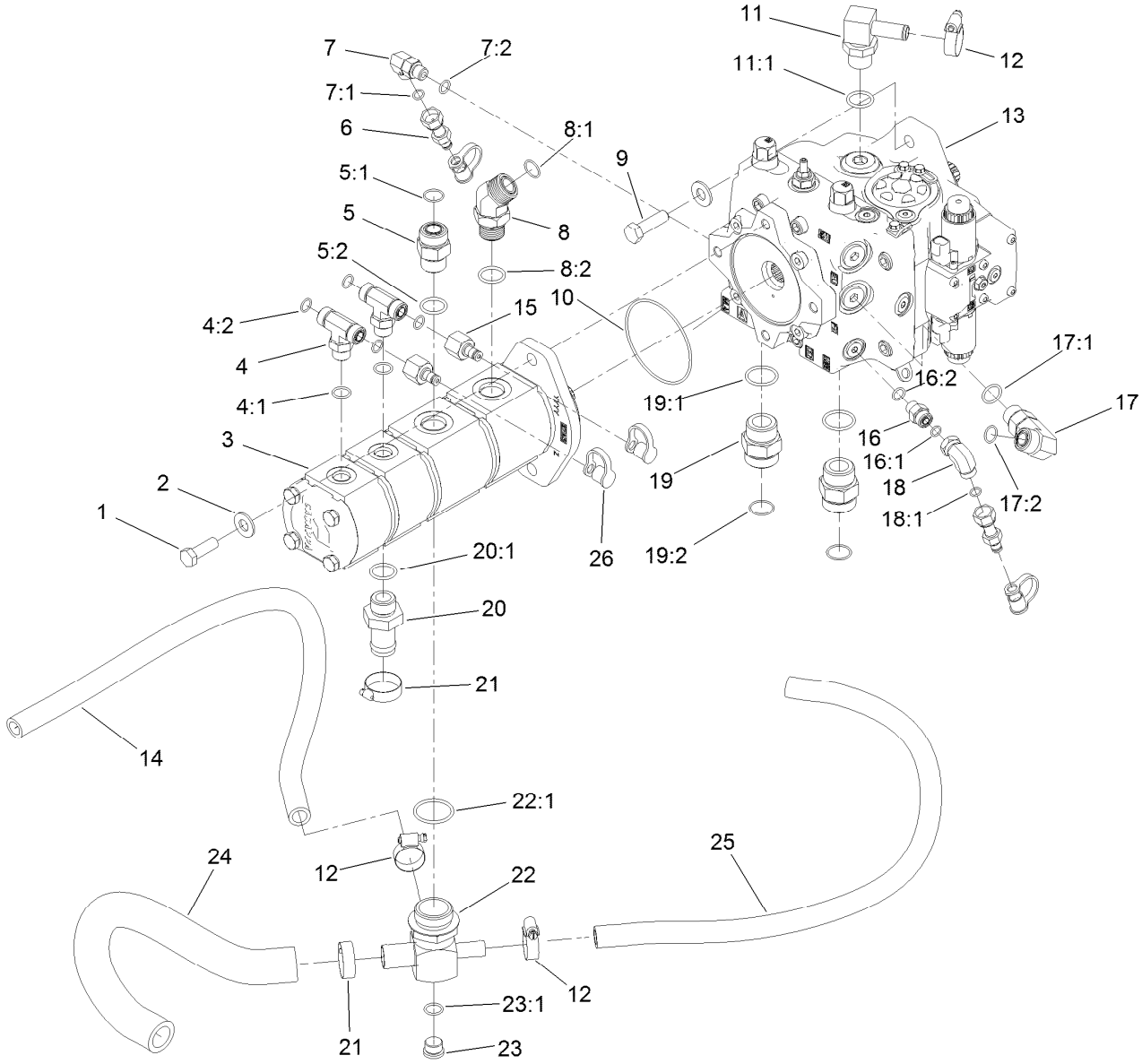

Piston Pump and Gear Pump Assembly

Ref.	Part Number	Qty.	Description
1	121-1525	2	Screw-HH
2	87-7270	4	Washer-Thrust
3	120-8906	1	Pump-Gear, 4-Section
4	340-157	2	Fitting-HYD, Tee
4:1	237-79	1	O-Ring
4:2	237-30	2	O-Ring
5	340-9	1	Fitting-STR
5:1	237-58	1	O-Ring
5:2	237-81	1	O-Ring
6	86-5480	2	Nipple-Test
7	340-77	1	Fitting-Elbow, 90 DEG
7:1	237-22	1	O-Ring
7:2	237-42	1	O-Ring
8	100-5530	1	Fitting-45 DEG
8:1	237-58	1	O-Ring
8:2	237-81	1	O-Ring
9	121-1524	2	Screw-HH
10	107-9447	1	O-Ring
11	117-3681	1	Fitting-HYD, 90 DEG
11:1	237-81	1	O-Ring
12	2412-129	3	Clamp-Hose

Ref.	Part Number	Qty.	Description
13	120-9059	1	Piston Pump ASM
14	121-1647	1	Hose-HYD
15	100-5616	2	Fitting
16	340-2	1	Fitting-Straight
16:1	237-22	1	O-Ring
16:2	237-42	1	O-Ring
17	121-1492	1	Fitting-90
17:1	237-80	1	O-Ring
17:2	237-65	1	O-Ring
18	340-159	1	Fitting-HYD, 90 DEG
18:1	237-22	2	O-Ring
19	104-3797	2	Fitting-Straight
19:1	237-146	1	O-Ring
19:2	340-65	1	O-Ring
20	99-3017	1	Fitting
20:1	237-81	1	O-Ring
21	2412-34	2	Clamp-Hose
22	121-1682	1	Fitting-Tee
22:1	237-101	1	O-Ring
23	353-988	1	Plug-Hex
23:1	237-79	1	O-Ring

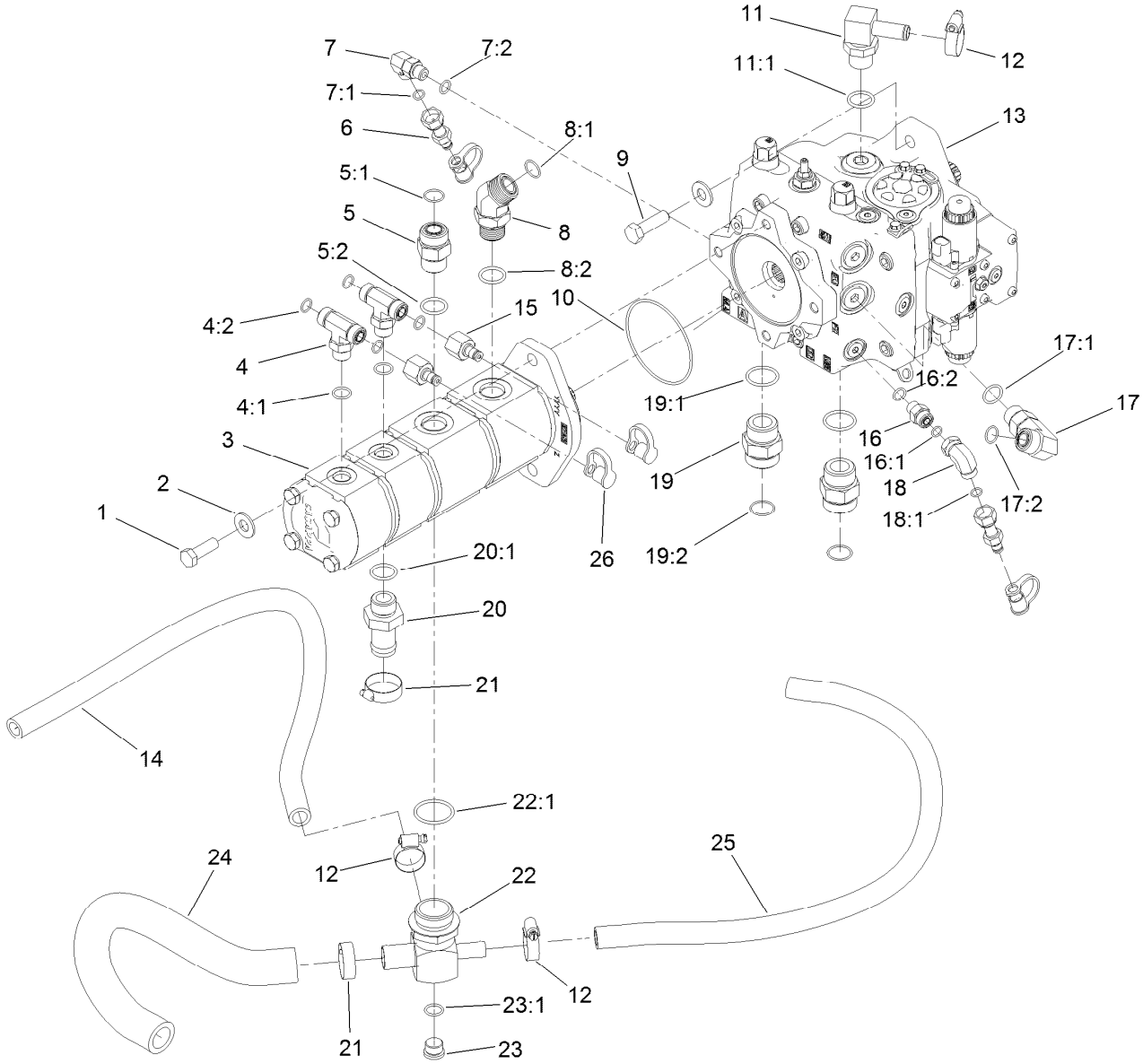

Piston Pump and Gear Pump Assembly (continued)

Ref.	Part Number	Qty.	Description
24	120-8815	1	Hose-Suction
25	120-9050	1	Hose-HYD
26	354-79	4	Cap-Dust

Piston Pump Assembly No. 120-9059

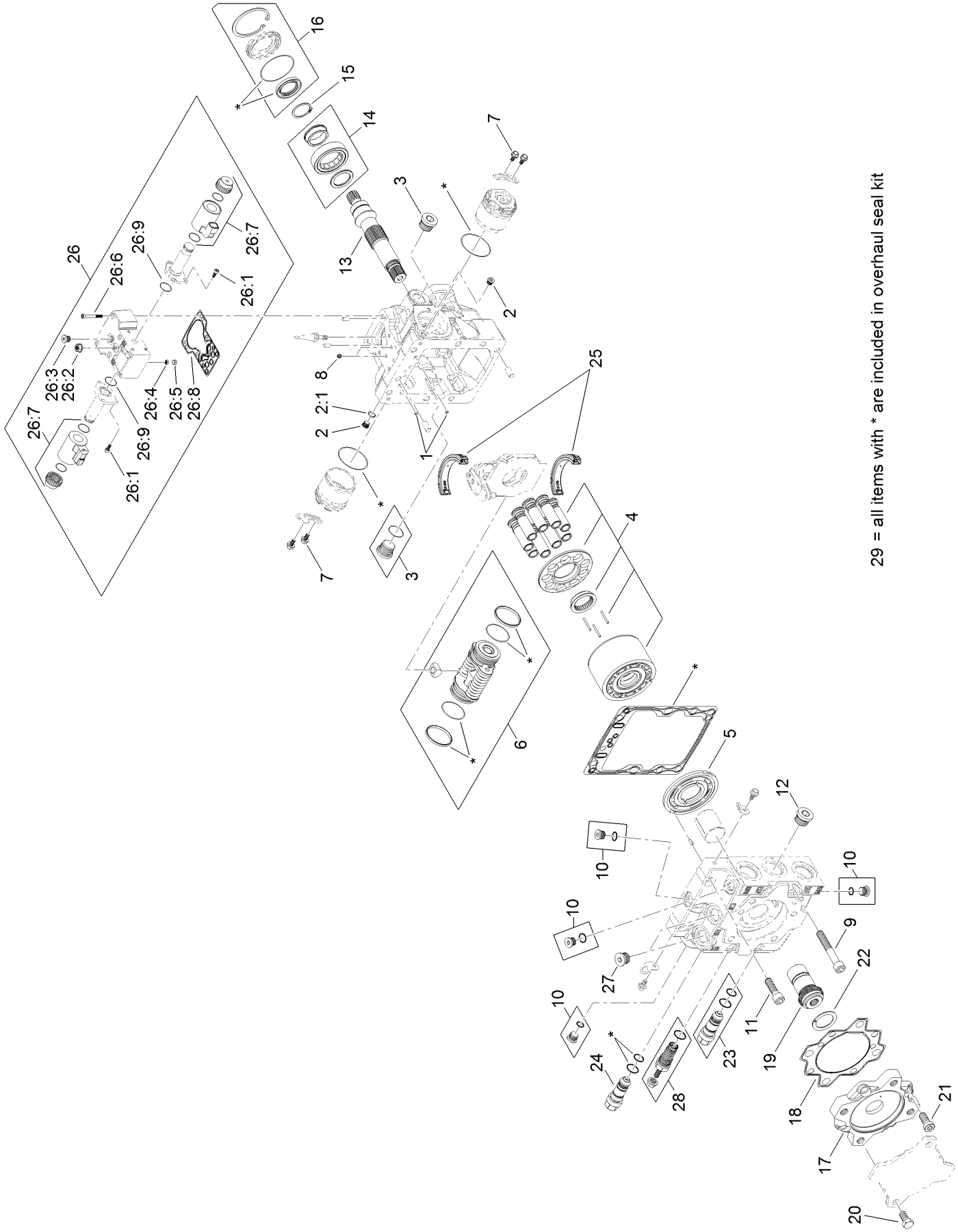

29 = all items with * are included in overhaul seal kit

Piston Pump Assembly No. 120-9059 (continued)

Ref.	Part Number	Qty.	Description
1	125-5266	2	Screen
2	75-0170	2	Plug-Thread, Straight
2:1	92-8777	1	O-Ring
3	107-4352	2	Plug
4	121-1723	1	Cylinder Block Kit
5	121-1724	1	Plate-Valve, CW
6	121-1725	1	Servo Piston ASM
7	125-5270	6	Screw
8	125-5276	2	Orifice (0.8)
9	121-1726	4	Screw
10	125-5300	4	Plug ASM
11	121-1727	2	Screw
12	125-5301	1	Plug
13	121-1728	1	Shaft
14	125-5279	1	Bearing-Roller
15	125-5280	1	Ring-Retaining
16	121-1729	1	Shaft Seal Kit
17	125-5284	1	Adapter
18	125-5285	1	Seal-Adapter
19	121-1730	1	Coupling
20	125-5281	4	Screw
21	125-5282	4	Screw
22	125-5287	1	Plate-Thrust
23	121-1731	1	Valve-Relief, High Pressure
24	125-5291	1	Valve-Relief, High Pressure
25	121-1732	1	Swash Plate Bearing Kit
26	125-5295	1	Control Kit (12 Volt)
26:1	125-5272	6	Screw
26:2	125-5273	1	Nut-Seal
26:3	125-5302	1	Plug
26:4	125-5266	1	Screen
26:5	125-5269	1	Ring-Locking
26:6	125-5274	6	Screw
26:7	125-5294	2	Coil Kit
26:8	125-5283	1	Gasket-Control
26:9	125-5288	2	O-Ring
27	125-5303	2	Plug ASM
28	125-5297	1	Charge Relief Kit
29	121-1733	1	Overhaul Seal Kit

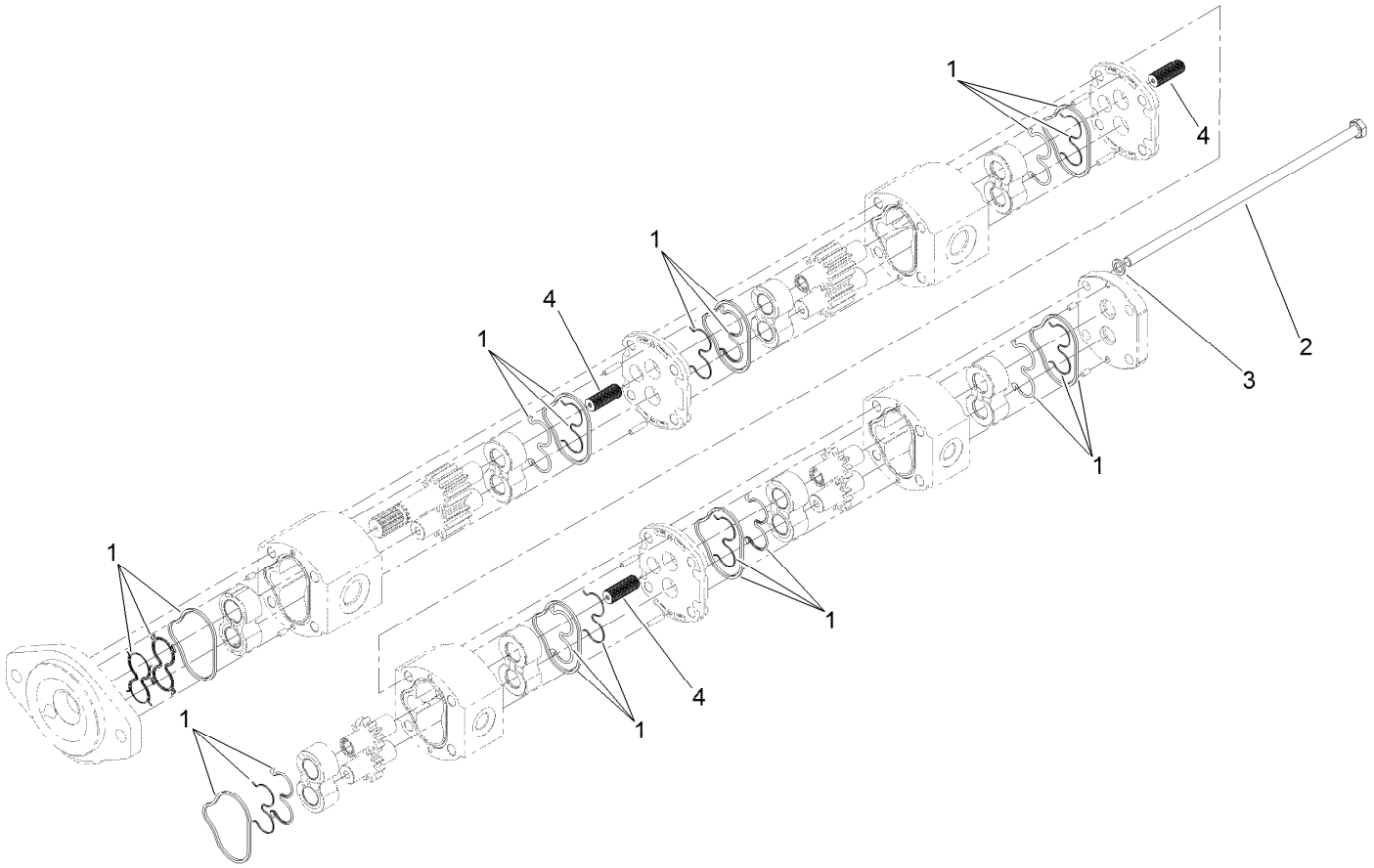

Four-Section Gear Pump Assembly No. 120-8906

Ref.	*Part Number*	*Qty.*	*Description*
1	115-3776	1	Seal Kit
2	115-3775	4	Bolt
3	121-1722	4	Washer
4	120-6284	3	Hub-Connecting

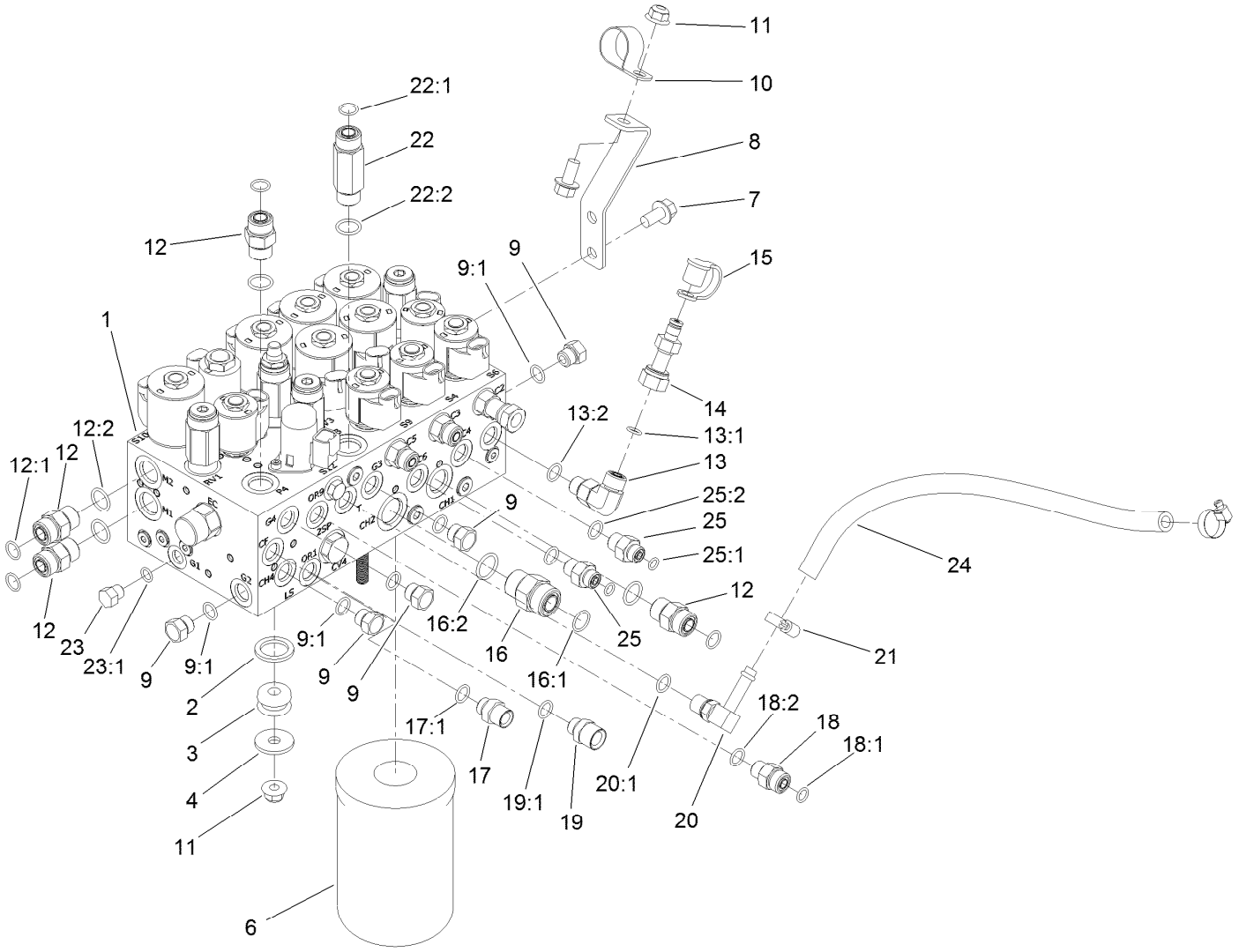

Combination Manifold Assembly

Ref.	Part Number	Qty.	Description
1	120-8842	1	HYD Combination Manifold ASM
2	92-2650	3	Spacer-Clutch
3	63-9750	3	Mount
4	63-8410	3	Washer
6	75-1310	1	Filter-HYD
7	3234-1	3	Screw-HHF
8	121-1542	1	Plate-Mount, Hose
9	353-508	5	Plug-HH
9:1	237-42	1	O-Ring
10	2412-126	1	R-Clamp
11	104-8301	4	Nut-HF, NI
12	340-4	4	Fitting-STR
12:1	237-30	1	O-Ring
12:2	237-79	1	O-Ring
13	340-77	1	Fitting-Elbow, 90 DEG
13:1	237-22	1	O-Ring
13:2	237-42	1	O-Ring
14	86-5480	1	Nipple-Test
15	354-79	1	Cap-Dust
16	340-7	1	Fitting-Straight

Ref.	Part Number	Qty.	Description
16:1	237-65	1	O-Ring
16:2	237-80	1	O-Ring
17	120-8975	1	Fitting-Straight
17:1	237-42	1	O-Ring
18	340-2	1	Fitting-Straight
18:1	237-22	1	O-Ring
18:2	237-42	1	O-Ring
19	120-8979	1	Fitting-Straight
19:1	237-42	1	O-Ring
20	100-4887	1	Fitting-Elbow, 90
20:1	237-42	1	O-Ring
21	2412-36	2	Clamp-Hose
22	119-4854	1	Fitting-STR
22:1	237-30	1	O-Ring
22:2	237-79	1	O-Ring
23	353-512	1	Plug
23:1	237-78	1	O-Ring
24	87-5730	1	Hose
25	340-1	2	Fitting-Straight
25:1	237-21	1	O-Ring
25:2	237-42	1	O-Ring

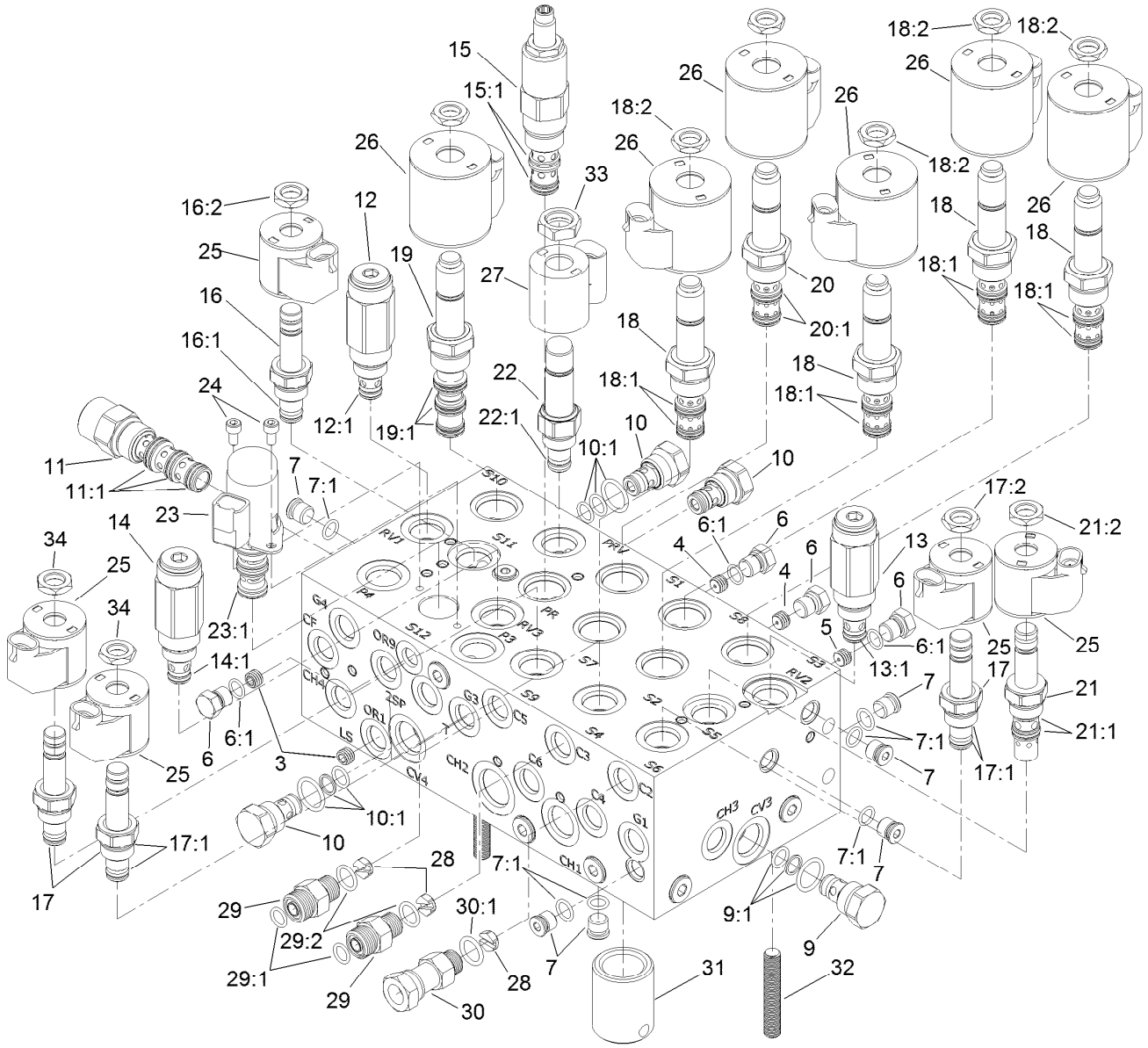

Combination Manifold Assembly No. 120-8842

Ref.	Part Number	Qty.	Description
3	110-5973	2	Orifice-0.030
4	112-6538	2	Orifice (.063 Inch)
5	110-8883	1	Plug-Orifice (0.040)
6	117-0115	4	Plug
6:1	237-78	1	O-Ring
7	353-990	14	Plug ASM
7:1	237-78	1	O-Ring
9	114-2873	1	Check Valve ASM
9:1	105-9156	1	Seal Kit
10	105-9321	3	Check Valve ASM
10:1	105-9156	1	Seal Kit
11	115-5409	1	Compensator ASM
11:1	110-8908	1	Spool Valve Seal Kit
12	125-7560	1	Relief Valve ASM
12:1	105-9156	1	Seal Kit
13	125-7559	1	Relief Valve ASM
13:1	105-9156	1	Seal Kit
14	125-7558	1	Relief Valve ASM
14:1	105-9156	1	Seal Kit
15	127-3663	1	Valve-Pressure Reducing
15:1	105-9154	1	Seal Kit

Ref.	Part Number	Qty.	Description
16	107-7516	1	Solenoid Valve ASM
16:1	105-9156	1	Seal Kit
16:2	110-2634	1	Nut-Coil
17	112-9206	3	Solenoid Valve ASM
17:1	105-9156	1	Seal Kit
17:2	110-2634	1	Nut-Coil
18	115-5400	4	Solenoid Valve ASM
18:1	107-7813	1	Seal Kit
18:2	110-2634	1	Nut-Coil
19	115-3023	1	Solenoid Valve ASM
19:1	110-8908	1	Spool Valve Seal Kit
20	125-7556	1	Solenoid Valve ASM
20:1	107-7813	1	Seal Kit
21	115-5405	1	Solenoid Valve ASM
21:1	115-5413	1	Seal Kit
21:2	110-2634	1	Nut-Coil
22	125-7555	1	Proportional Relief Valve ASM
22:1	110-6316	1	Seal Kit
23	125-7554	1	Valve-Solenoid
23:1	125-7561	1	Seal Kit

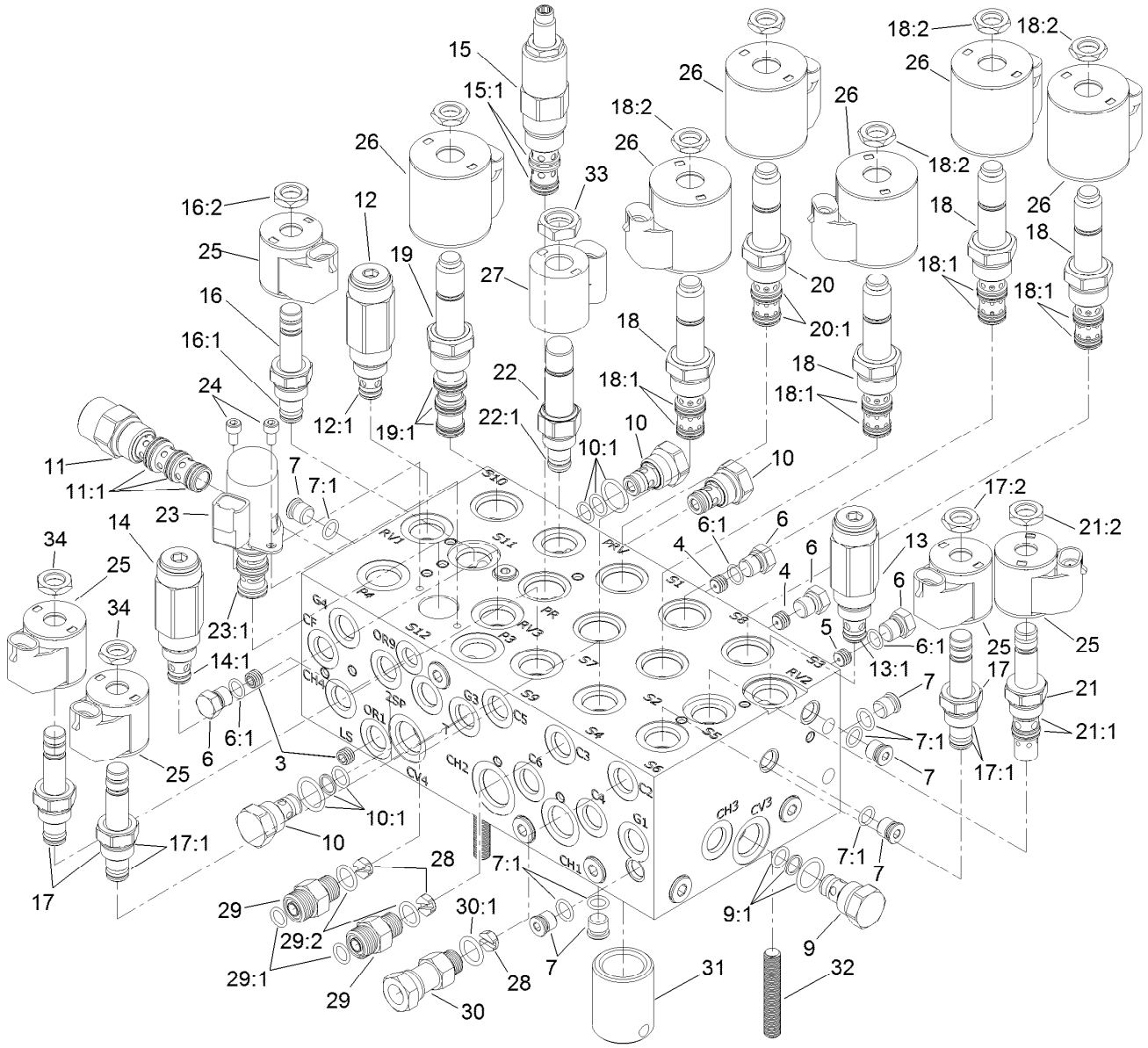

Combination Manifold Assembly No. 120-8842 (continued)

Ref.	Part Number	Qty.	Description
24	115-8733	2	Screw-HSH
25	110-0497	5	Coil-Solenoid
26	110-6344	6	Coil-12V, Dc
27	125-7553	1	E-Coil, 12Vdc
28	125-7552	3	Orifice-Check, .070 DIA
29	340-2	2	Fitting-Straight
29:1	237-22	1	O-Ring

Ref.	Part Number	Qty.	Description
29:2	237-42	1	O-Ring
30	104-3779	1	Connector-Swivel, Straight
30:1	237-42	1	O-Ring
31	125-7551	1	Nipple-Filter
32	130-2661	3	Stud-Manifold
33	125-7550	1	Nut-Coil
34	110-2634	11	Nut-Coil

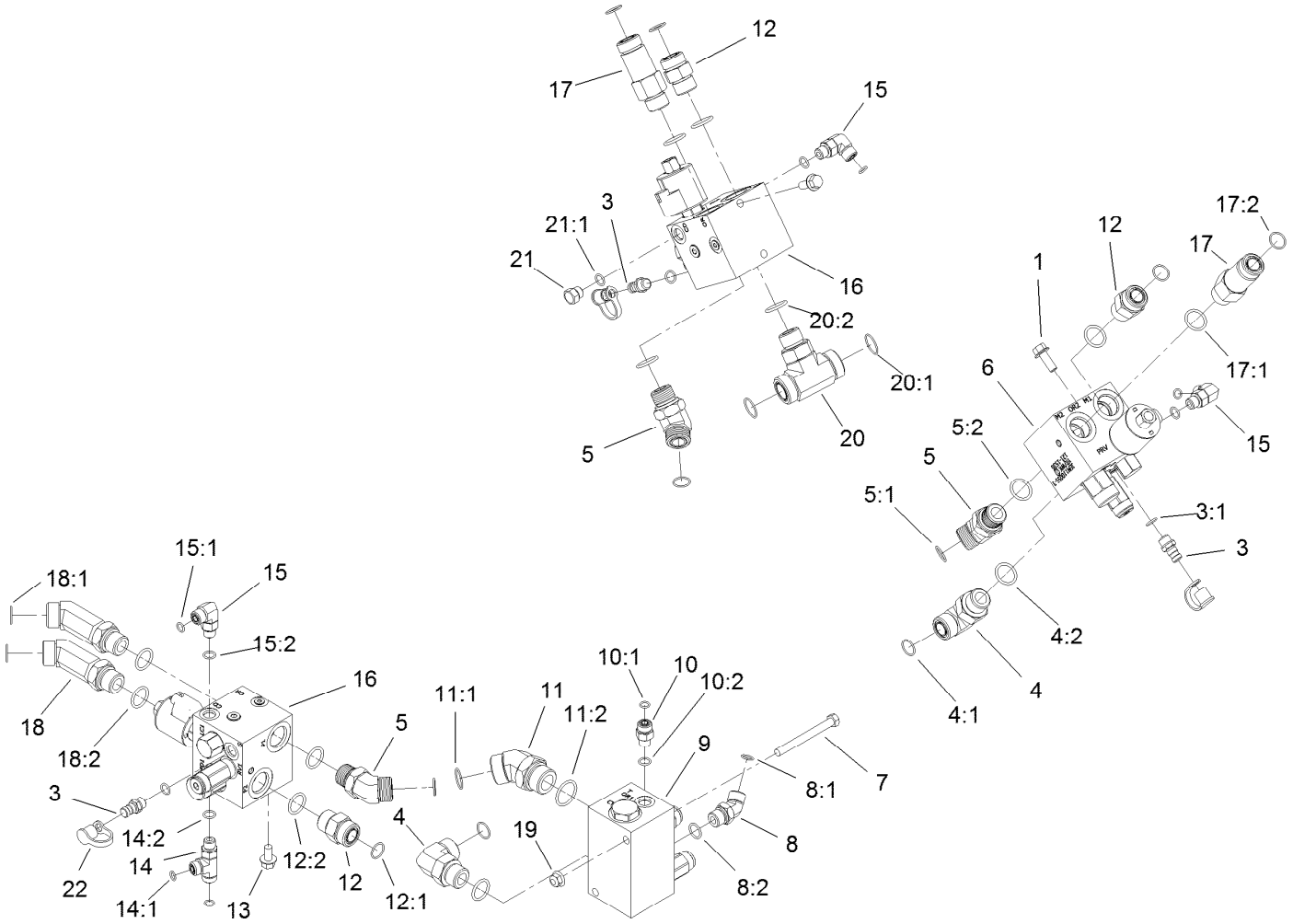

Manifold Block Assembly

Ref.	Part Number	Qty.	Description
1	3234-11	4	Screw-HHF
3	59-7410	3	Fitting-Diagnostic
3:1	237-42	1	O-Ring
4	340-142	2	Fitting-Elbow-90
4:1	237-58	1	O-Ring
4:2	237-81	1	O-Ring
5	100-5530	3	Fitting-45 DEG
5:1	237-58	1	O-Ring
5:2	237-81	1	O-Ring
6	121-1536	1	Manifold-PTO, Left
7	323-42	2	Screw-HH
8	340-101	1	Fitting-HYD, 45 DEG
8:1	237-30	1	O-Ring
8:2	237-79	1	O-Ring
9	121-1530	1	Manifold-Traction, Rear
10	340-2	1	Fitting-Straight
10:1	237-22	1	O-Ring
10:2	237-42	1	O-Ring
11	104-3509	1	Fitting-HYD, 45 DEG
11:1	237-146	1	O-Ring
11:2	340-65	1	O-Ring

Ref.	Part Number	Qty.	Description
12	340-9	3	Fitting-STR
12:1	237-58	1	O-Ring
12:2	237-81	1	O-Ring
13	3234-1	2	Screw-HHF
14	340-86	1	Fitting-Tee
14:1	237-22	2	O-Ring
14:2	237-42	1	O-Ring
15	340-77	3	Fitting-Elbow, 90 DEG
15:1	237-22	1	O-Ring
15:2	237-42	1	O-Ring
16	121-1537	2	Manifold-PTO, Center And Right
17	92-6058	2	Fitting-HYD
17:1	237-81	1	O-Ring
17:2	237-58	1	O-Ring
18	120-8982	2	Fitting-45 DEG
18:1	237-58	1	O-Ring
18:2	237-81	1	O-Ring
19	104-8301	2	Nut-HF, NI
20	120-8825	1	Fitting-Tee
20:1	340-65	2	O-Ring

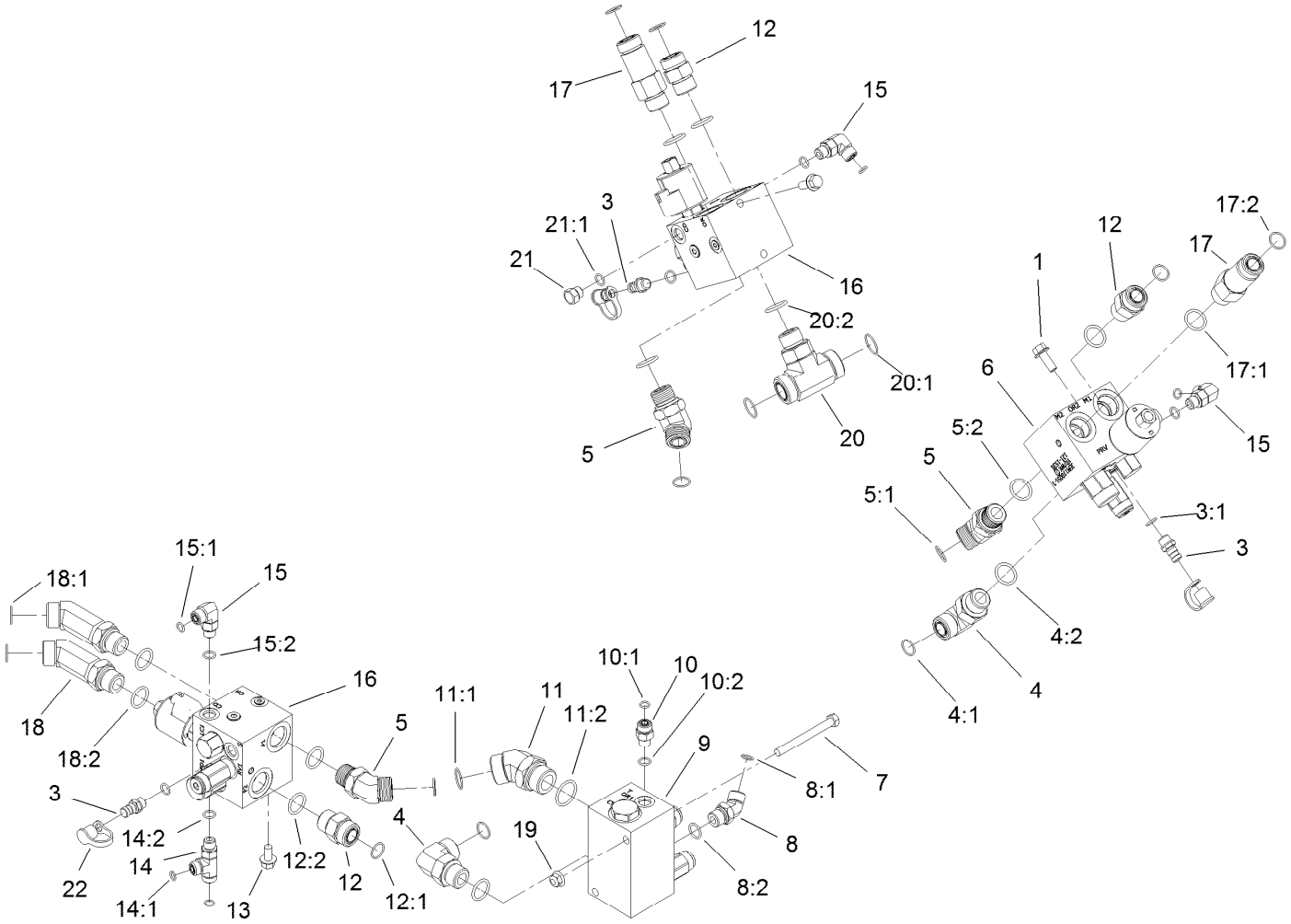

Manifold Block Assembly (continued)

Ref.	Part Number	Qty.	Description
20:2	237-81	1	O-Ring
21	353-508	1	Plug-HH

Ref.	Part Number	Qty.	Description
21:1	237-42	1	O-Ring
22	354-79	3	Cap-Dust

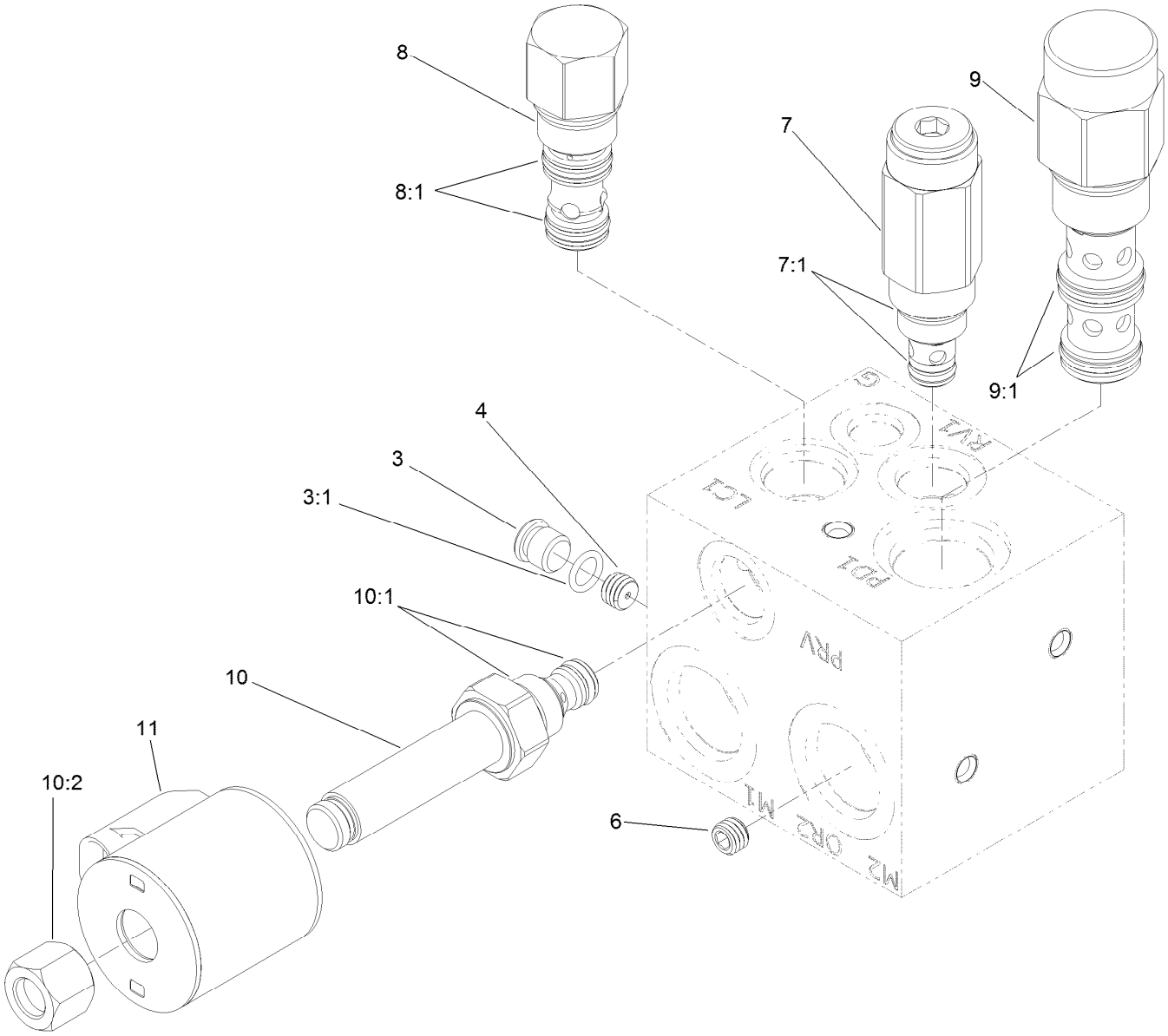

Left Power-Take-Off Manifold Assembly No. 121-1536

Ref.	*Part Number*	*Qty.*	*Description*
3	353-990	1	Plug ASM
3:1	237-78	1	O-Ring
4	117-8315	1	Orifice (.025 Inch)
6	112-6538	1	Orifice (.063 Inch)
7	114-5512	1	Valve-Relief, 600 PSI
7:1	105-9156	1	Seal Kit
8	105-9153	1	Element-Logic, Vented
8:1	119-2159	1	Seal Kit
9	125-4327	1	Valve-Directional, Pilot
9:1	114-5515	1	Seal Kit
10	117-0227	1	Valve-Relief, Proportional
10:1	105-9156	1	Seal Kit
10:2	119-2160	1	Nut-Coil
11	110-6344	1	Coil-12V, Dc

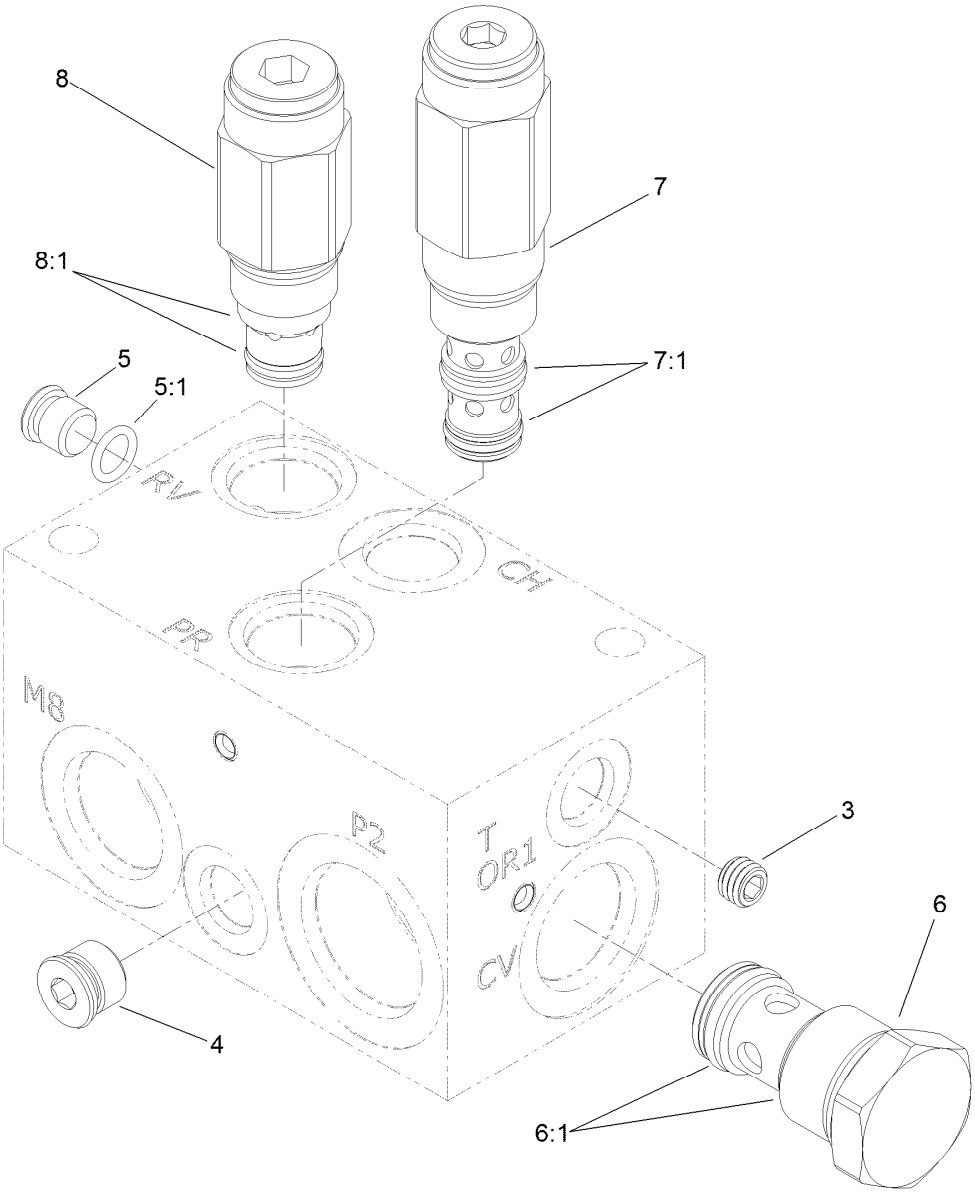

Rear Traction Manifold Assembly No. 121-1530

Ref.	*Part Number*	*Qty.*	*Description*
3	107-7525	1	Plug-Orifice (.050 Inch)
4		1	Plug ●
5	353-990	1	Plug ASM
5:1	237-78	1	O-Ring
6	125-4328	1	Valve-Check
6:1	125-4336	1	Seal Kit
7	125-4329	1	Valve-Reducing
7:1	125-4334	1	Seal Kit
8	125-4331	1	Valve-Relief
8:1	110-6316	1	Seal Kit

● Not serviced separately

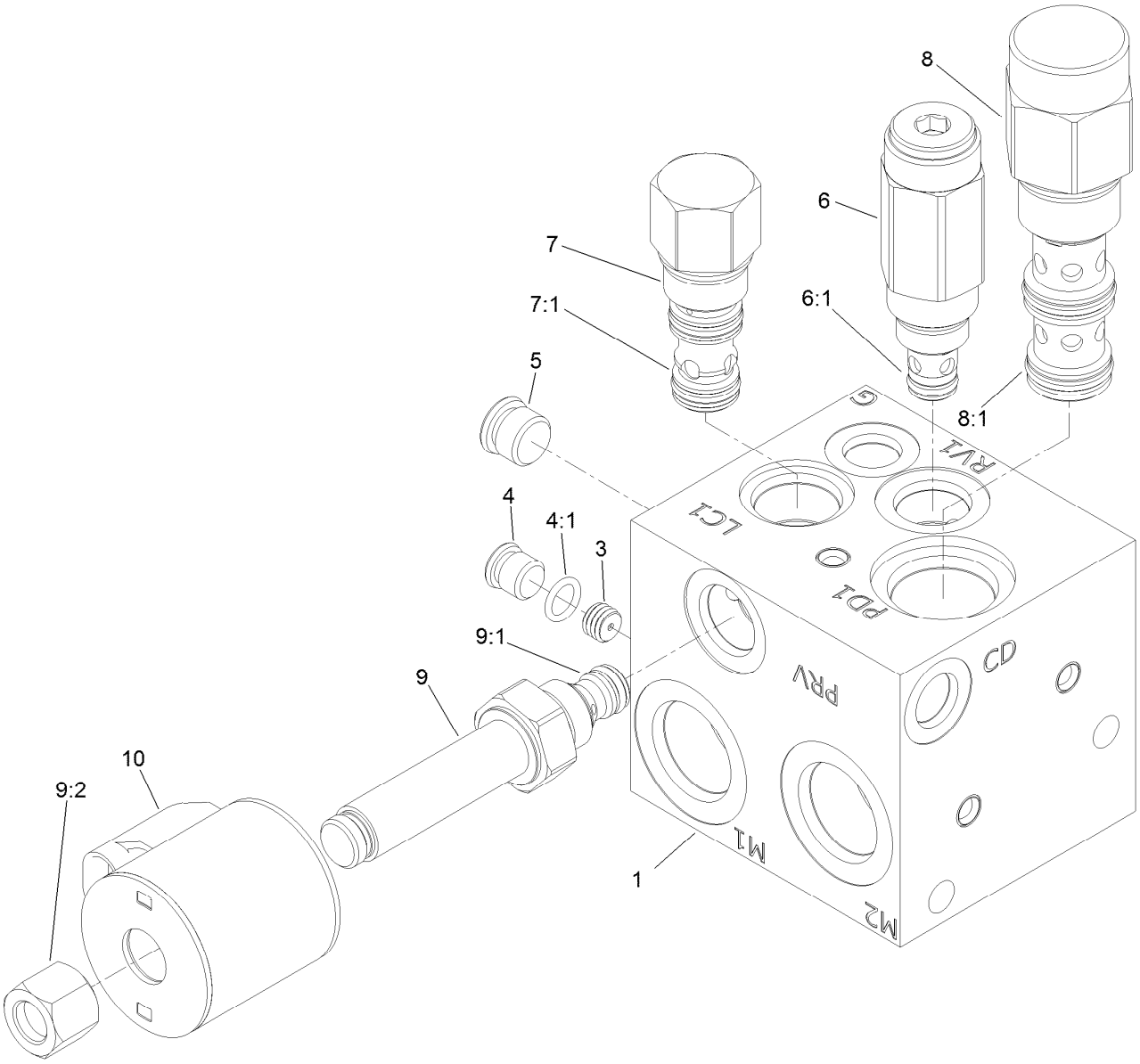

Center and Right Power-Take-Off Manifold Assembly No. 121-1537

Ref.	*Part Number*	*Qty.*	*Description*
1		1	Manifold Block ●
3	117-8315	1	Orifice (.025 Inch)
4	353-990	1	Plug ASM
4:1	237-78	1	O-Ring
5		1	Plug ●
6	114-5512	1	Valve-Relief, 600 PSI
6:1	105-9156	1	Seal Kit
7	105-9153	1	Element-Logic, Vented
7:1	119-2159	1	Seal Kit
8	125-4327	1	Valve-Directional, Pilot
8:1	114-5515	1	Seal Kit
9	117-0227	1	Valve-Relief, Proportional
9:1	105-9156	1	Seal Kit
9:2	119-2160	1	Nut-Coil
10	110-6344	1	Coil-12V, Dc

● Not serviced separately

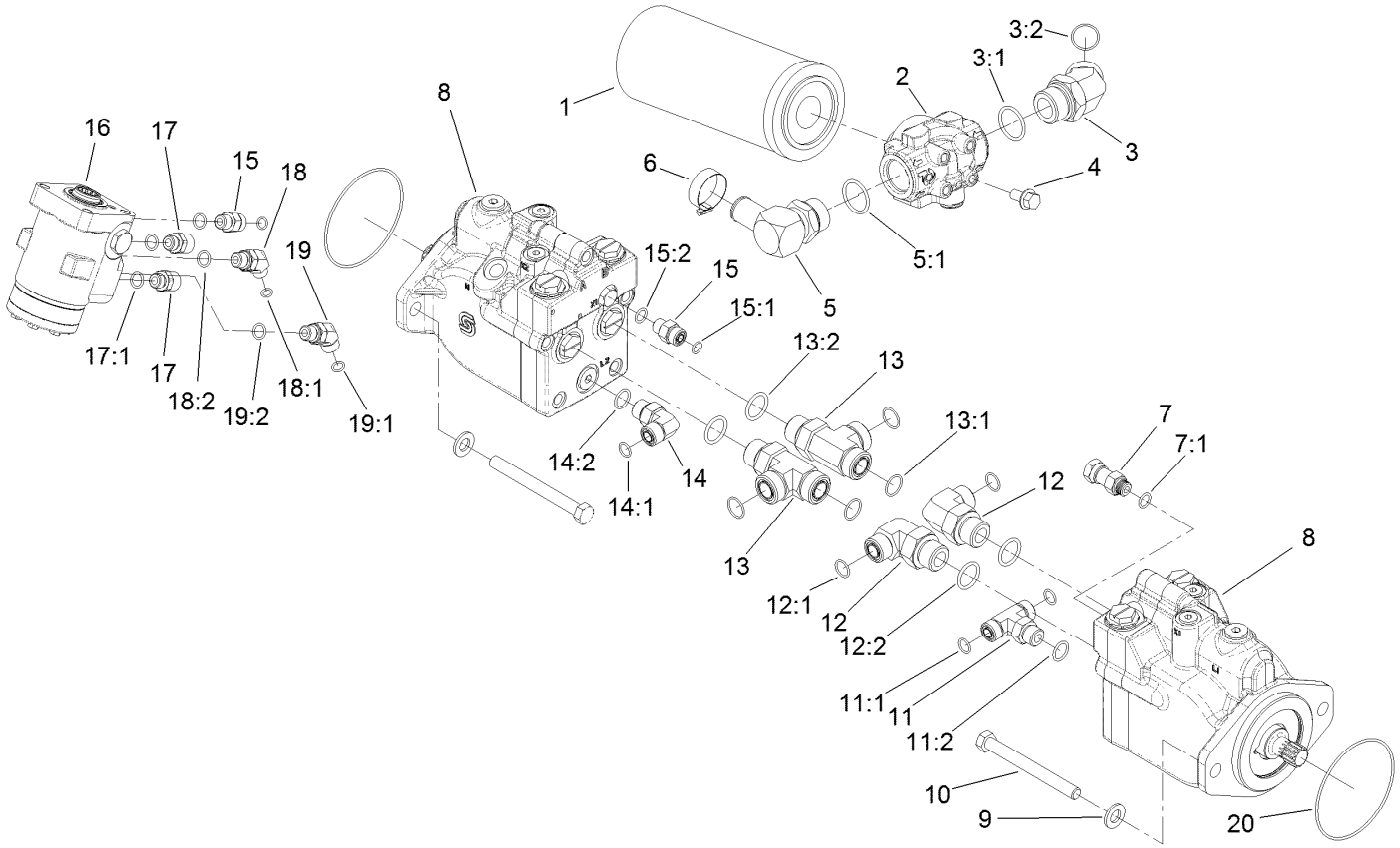

Drive Motor, Steer Valve and Filter Head Assembly

Ref.	Part Number	Qty.	Description
1	94-2621	1	Element-Filter
2	121-1577	1	Head-Filter
3	104-3509	1	Fitting-HYD, 45 DEG
3:1	237-146	1	O-Ring
3:2	340-65	1	O-Ring
4	3234-1	4	Screw-HHF
5	23-8910	1	Stem-Barb-90
5:1	237-146	1	O-Ring
6	2412-34	1	Clamp-Hose
7	104-3779	1	Connector-Swivel, Straight
7:1	237-42	1	O-Ring
8	120-8913	2	HYD Motor ASM
9	106-9888	4	Washer-Flat
10	33116-120	4	Screw-HH
11	340-157	1	Fitting-HYD, Tee
11:1	237-79	1	O-Ring
11:2	237-30	2	O-Ring
12	340-139	2	Fitting-Elbow 90
12:1	237-81	1	O-Ring
12:2	237-65	1	O-Ring

Ref.	Part Number	Qty.	Description
13	340-148	2	Fitting-Tee
13:1	237-81	1	O-Ring
13:2	237-58	2	O-Ring
14	340-98	1	Fitting-Elbow, 90 DEG
14:1	237-79	1	O-Ring
14:2	237-30	1	O-Ring
15	340-2	2	Fitting-Straight
15:1	237-22	1	O-Ring
15:2	237-42	1	O-Ring
16	130-7949	1	Steering Control Valve ASM
17	120-8979	2	Fitting-Straight
17:1	237-42	1	O-Ring
18	340-137	1	Fitting
18:1	237-21	1	O-Ring
18:2	237-42	1	O-Ring
19	340-87	1	Fitting-Elbow-45
19:1	237-22	1	O-Ring
19:2	237-42	1	O-Ring
20	237-166	2	O-Ring

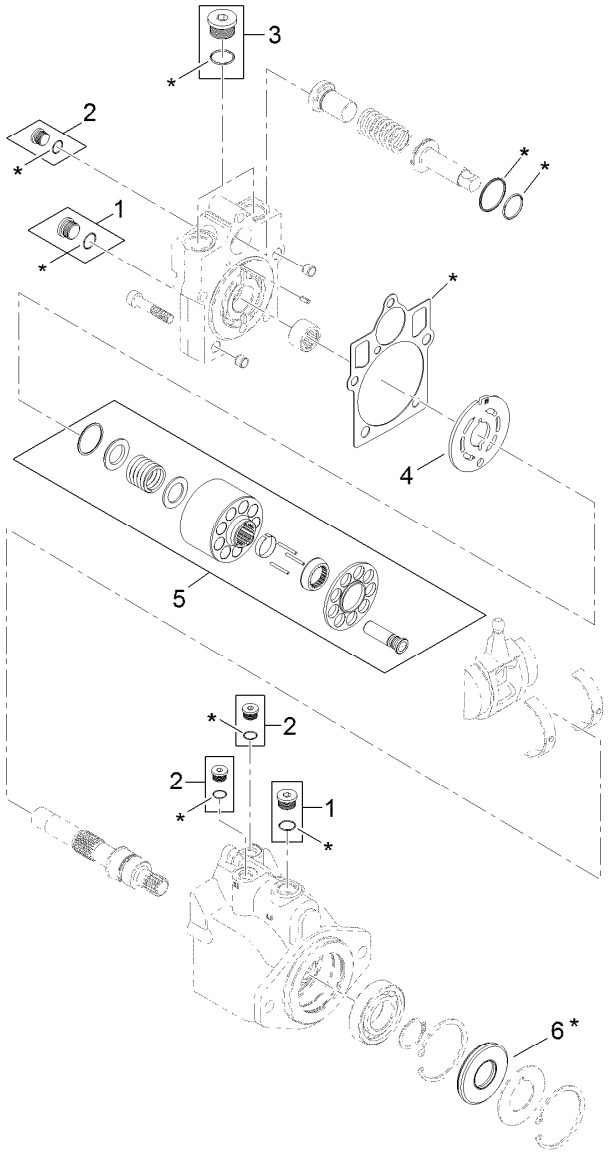

7 = all items with * are included in overhaul seal kit

Hydraulic Motor Assembly No. 120-8913

Ref.	*Part Number*	*Qty.*	*Description*
1	67-9090	2	Plug
2	75-0070	3	Plug
3	107-4352	1	Plug
4	121-1734	1	Plate-Valve
5	121-1735	1	Cylinder Block Kit
6	69-3190	1	Seal-Lip
7	121-1736	1	Overhaul Seal Kit

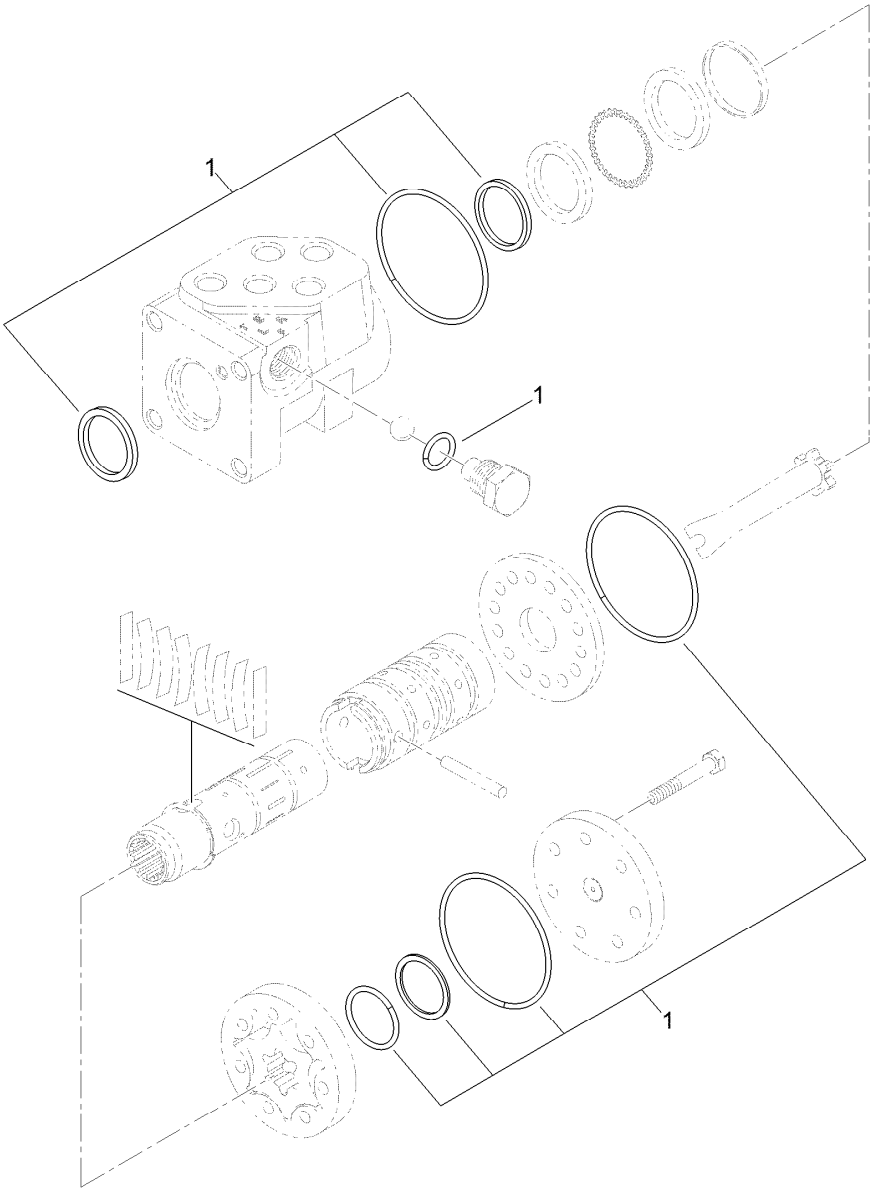

Steering Valve Assembly No. 130-7949

Ref.	*Part Number*	*Qty.*	*Description*
1	130-8358	1	Seal Kit

Lift, Steer and Fan Hydraulic Assembly

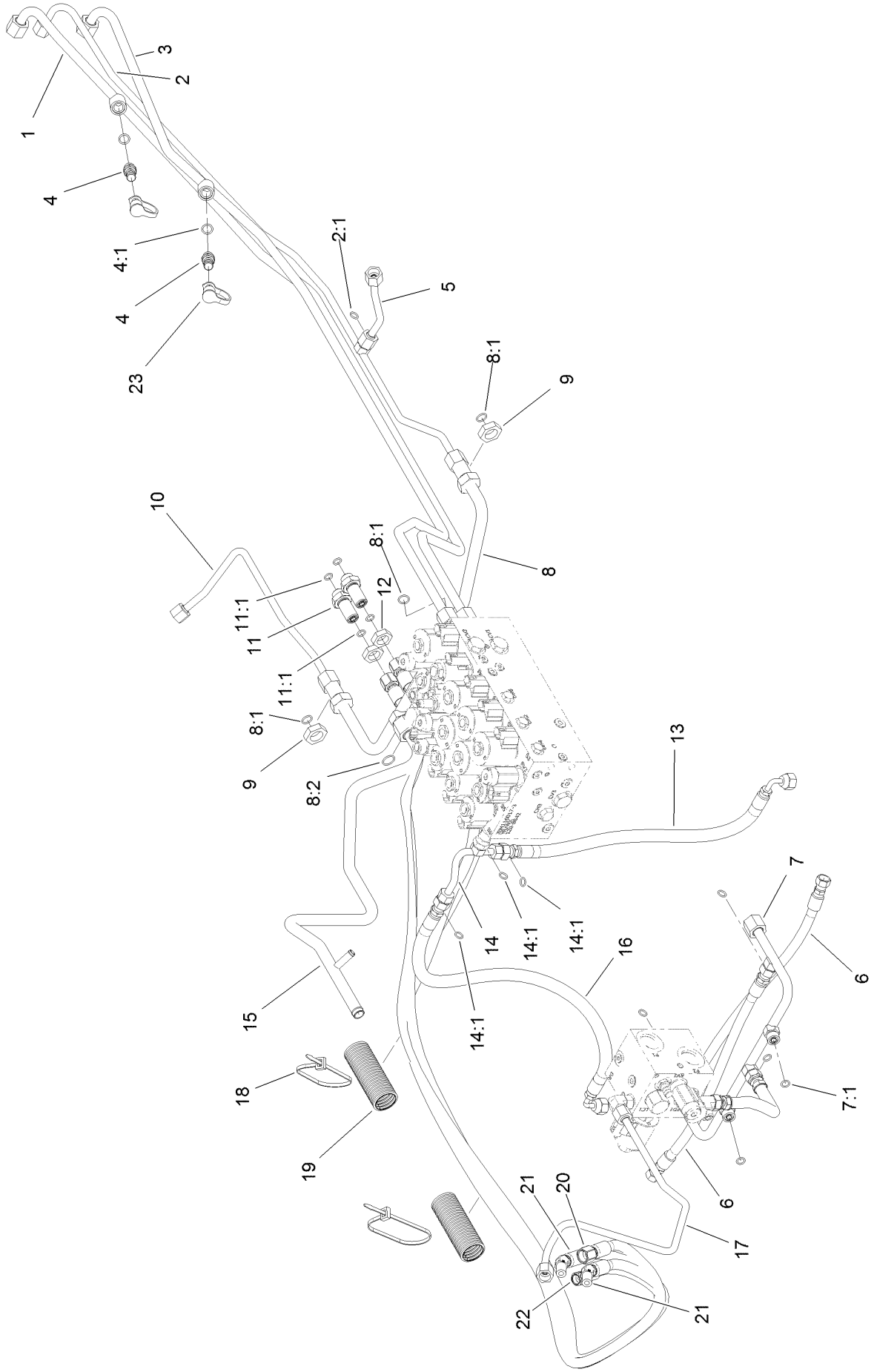

Lift, Steer and Fan Hydraulic Assembly (continued)

Ref.	Part Number	Qty.	Description
1	120-9074	1	Tube-Fan
2	120-8966	1	Tube-Drain, Fan
2:1	237-22	1	O-Ring
3	120-9075	1	Tube-Fan, M2
4	59-7410	2	Fitting-Diagnostic
4:1	237-42	1	O-Ring
5	121-1523	1	Tube-HYD
6	117-3123	2	HYD Hose ASM
7	120-9078	1	Tube-HYD
7:1	237-22	5	O-Ring
8	121-1509	1	Tube-HYD
8:1	237-30	3	O-Ring
8:2	237-65	1	O-Ring
9	340-127	2	Nut-Bulkhead
10	121-1522	1	Tube-HYD
11	340-71	2	Fitting-Straight, Bulkhead
11:1	237-22	2	O-Ring
12	340-70	2	Nut-Lock
13	121-1567	1	Hose-HYD
14	121-1565	1	Tube-Tee
14:1	237-22	3	O-Ring
15	121-1510	1	Tube-HYD
16	121-1566	1	Hose-HYD
17	120-8848	1	Tube-HYD
18	3290-378	4	Tie-Cable
19	121-1544	2	Cover-Hose
20	121-1504	1	Hose-HYD
21	121-1491	2	Hose-HYD
22	121-1503	1	Hose-HYD
23	354-79	2	Cap-Dust

Oil Cooler Hydraulic Assembly

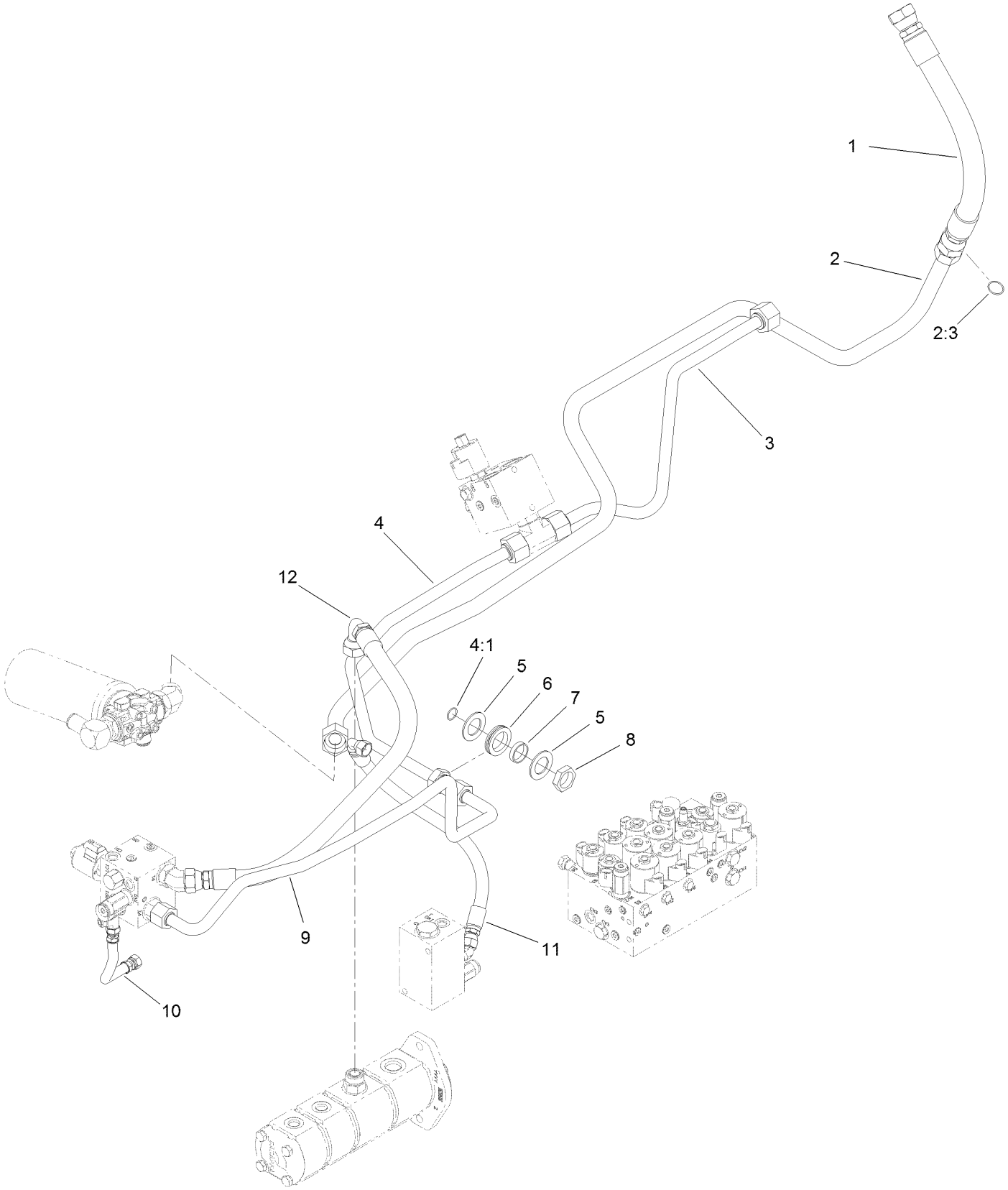

Oil Cooler Hydraulic Assembly (continued)

Ref.	Part Number	Qty.	Description
1	120-9060	1	Hose-HYD
2	121-1612	1	Tube ASM
2:3	340-65	1	O-Ring
3	121-1626	1	Tube-HYD
4	121-1507	1	Tube ASM
4:1	237-58	1	O-Ring
5	69-8910	2	Washer
6	240-7	1	Grommet-Rubber
7	69-8900	1	Spacer
8	340-126	1	Nut-Bulkhead
9	120-8838	1	Tube-PTO, Front Return
10	121-1572	1	Hose-HYD
11	117-0686	1	Hose-HYD
12	115-4384	1	Hose-HYD

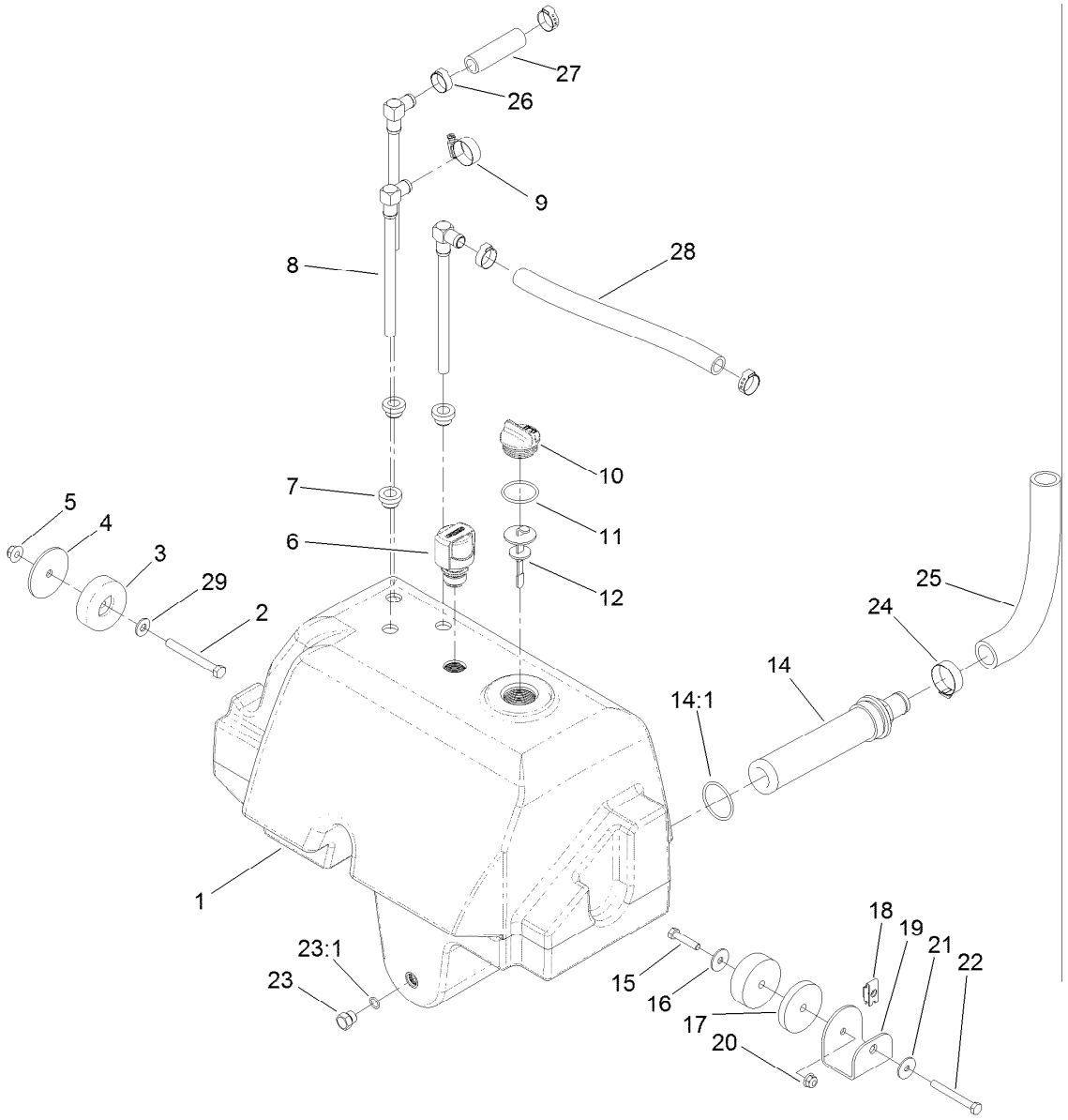

Hydraulic Reservoir Assembly

Ref.	Part Number	Qty.	Description
1	120-9077	1	Reservoir-HYD
2	323-20	1	Screw-HH
3	108-1605	2	Bumper-Recess
4	121-1456	1	Spacer-Thin
5	104-8301	1	Nut-HF, NI
6	115-9793	1	Breather
7	104-0790	3	Bushing
8	114-0002	3	Pipe-Stand
9	2412-129	1	Clamp-Hose
10	93-7498	1	Plug-Plastic
11	237-101	1	O-Ring
12	112-6365	1	Dipstick
14	104-7546	1	Tank Strainer ASM
14:1	340-136	1	O-Ring
15	322-7	1	Screw-HH

Ref.	Part Number	Qty.	Description
16	3256-22	1	Washer-Flat
17	121-1533	1	Spacer-Thick
18	110-3510	1	Nut-Retainer
19	121-1557-03	1	Mount-Tank
20	104-8300	1	Nut-HF, NI
21	3256-82	1	Washer-Flat
22	322-13	1	Screw-HH
23	353-508	1	Plug-HH
23:1	237-42	1	O-Ring
24	2412-34	1	Clamp-Hose
25	120-8810	1	Hose-Strainer
26	115-5436	4	Clamp-Hose, Crimp
27	114-4920	1	Hose
28	121-1521	1	Hose
29	3256-24	1	Washer-Flat

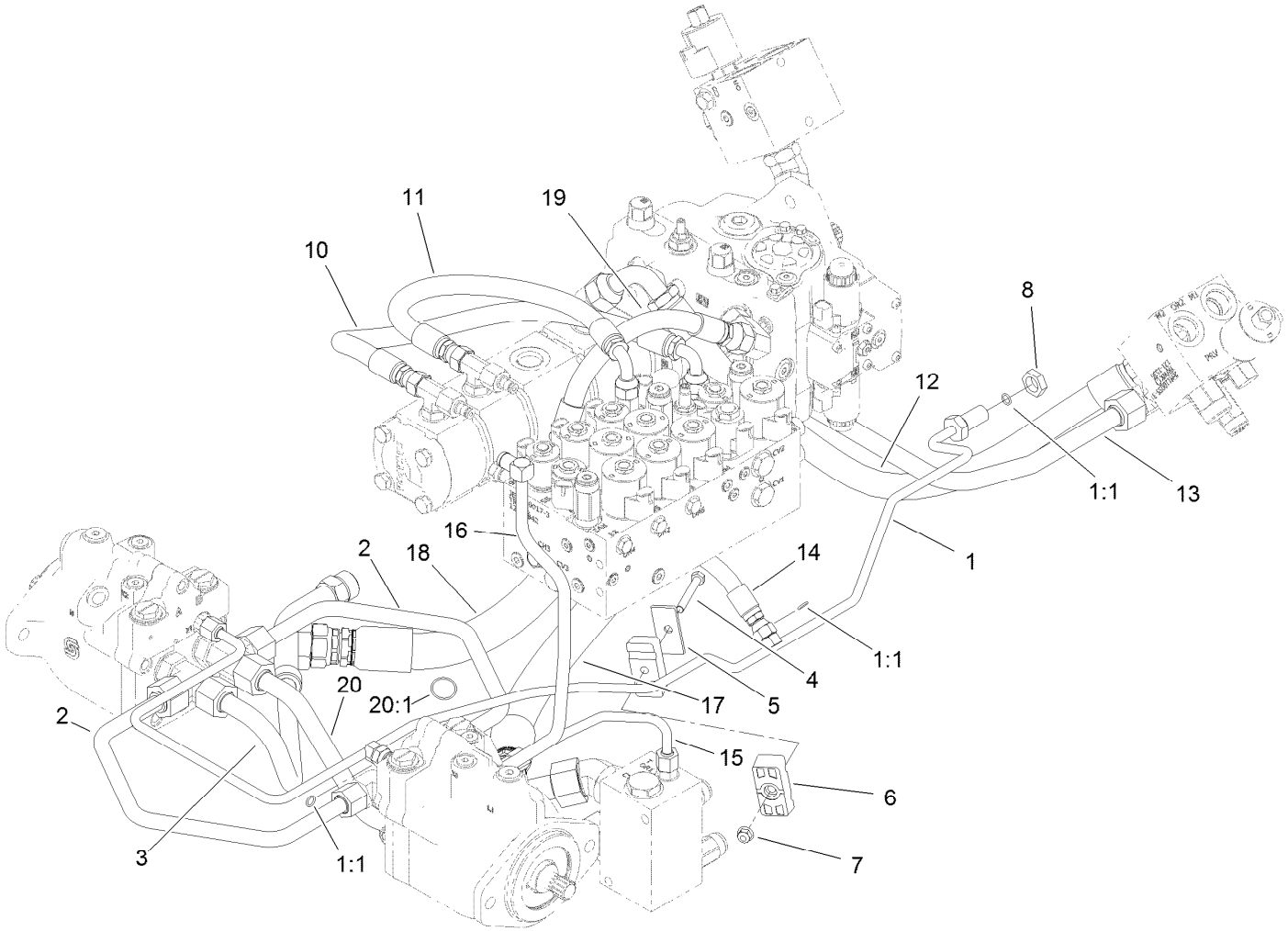

Traction Hydraulic Assembly

Ref.	Part Number	Qty.	Description
1	121-1552	1	Tube ASM
1:1	237-22	3	O-Ring
2	120-9079	2	Tube-HYD
3	121-1624	1	Tube-HYD
4	322-11	1	Screw-HH
5	69-9761	1	Plate-Cover
6	120-3200	2	Clamp-Tube
7	104-8300	1	Nut-HF, NI
8	340-70	1	Nut-Lock
10	104-2807	1	Hose-HYD
11	104-4584	1	Hose-HYD

Ref.	Part Number	Qty.	Description
12	115-4384	1	Hose-HYD
13	120-8834	1	Tube-PTO, LH To RH
14	104-2234	1	Hose-HYD
15	121-1480	1	Tube-HYD
16	120-8961	1	Tube-Return, Front
17	121-1564	1	Hose-HYD
18	121-1563	1	Hose-HYD
19	121-1505	1	Hose-HYD
20	121-1581	1	Tube-Tee
20:1	340-65	1	O-Ring

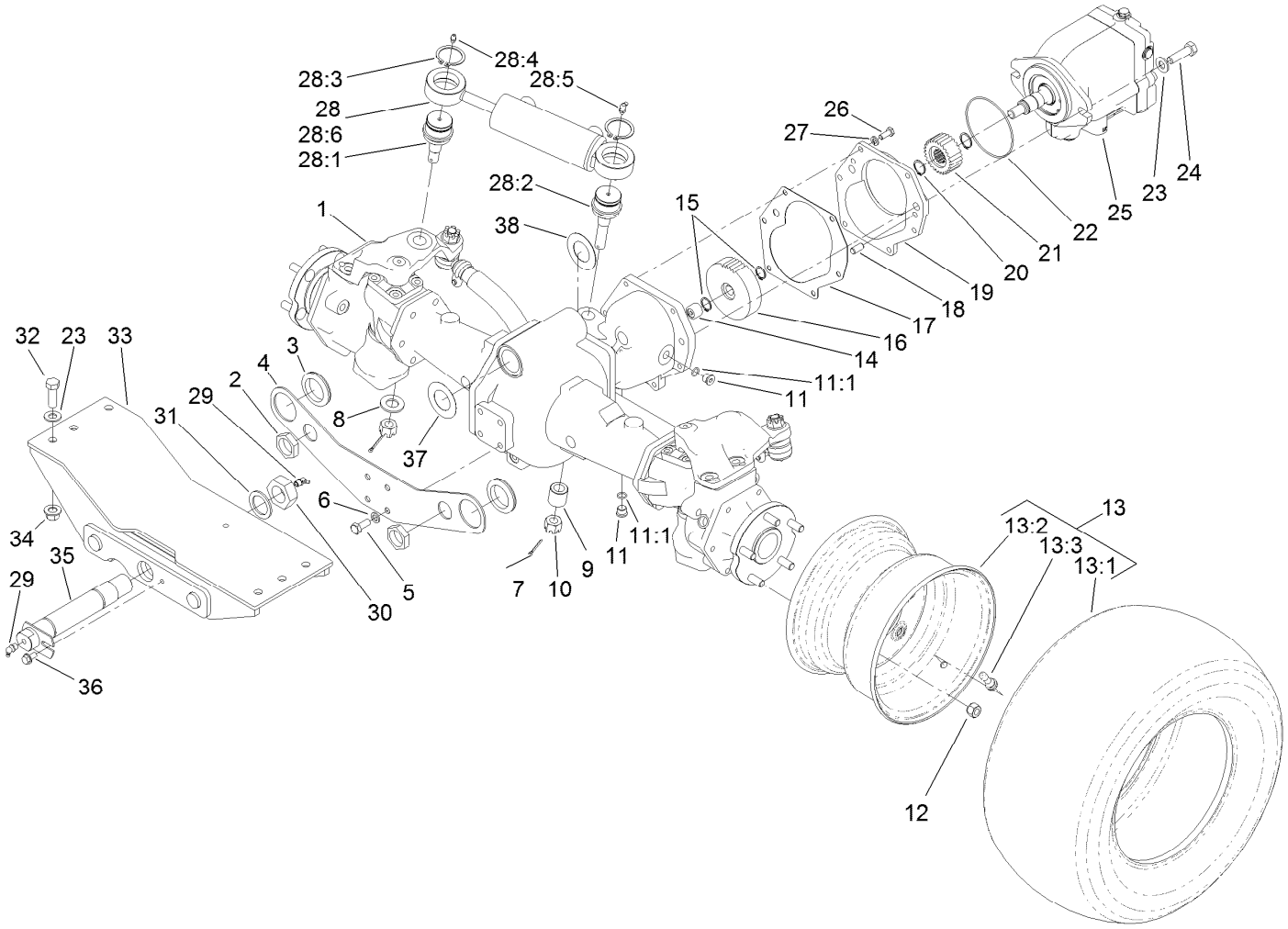

Rear Axle and Steering Cylinder Assembly

Ref.	Part Number	Qty.	Description
1	110-4750	1	Drive Axle ASM
2	340-126	2	Nut-Bulkhead
3	240-2	2	Grommet-Rubber
4	120-9069-03	1	Plate-Mount, Bulkhead
5	43-0090	4	Screw-HH
6	48-9590	4	Washer-Lock
7	3272-12	2	Pin-Cotter
8	92-5836	1	Washer
9	100-3796	1	Spacer-Joint, Ball
10	32136-14	2	Nut-Hst
11	353-989	2	Plug-Hex, Hollow
11:1	237-42	1	O-Ring
12	93-5268	10	Nut-Lug
13		2	Tire And Wheel ASM ●
13:1	120-8910	1	Tire-Off Road
13:2	120-8909	1	Rim
13:3	232-27	1	Stem-Valve
14	74-5700	1	Bearing-Needle, Roller

Ref.	Part Number	Qty.	Description
15	32120-15	2	Ring-Snap, EXT
16	100-3053	1	Gear-45 Tooth
17	106-1140	1	Gasket
18	104-2353	2	Pin-Dowel
19	95-7541	1	Plate-Cover
20	32120-76	2	Ring-Snap, EXT
21	104-0755	1	Pinion-27 Tooth
22	237-166	1	O-Ring
23	3256-26	8	Washer-Flat
24	325-7	2	Screw-HH
25	120-8814	1	HYD Motor ASM
26	33114-020	6	Screw-HH
27	3253-4	6	Washer-Lock
28	121-1535	1	Steering Cylinder ASM
28:1	106-6774	1	Joint-Ball
28:2	100-3795	1	Joint-Ball
28:3	32151-104	2	Ring-Retaining, External
28:4	302-5	1	Fitting-Grease

● Not serviced separately

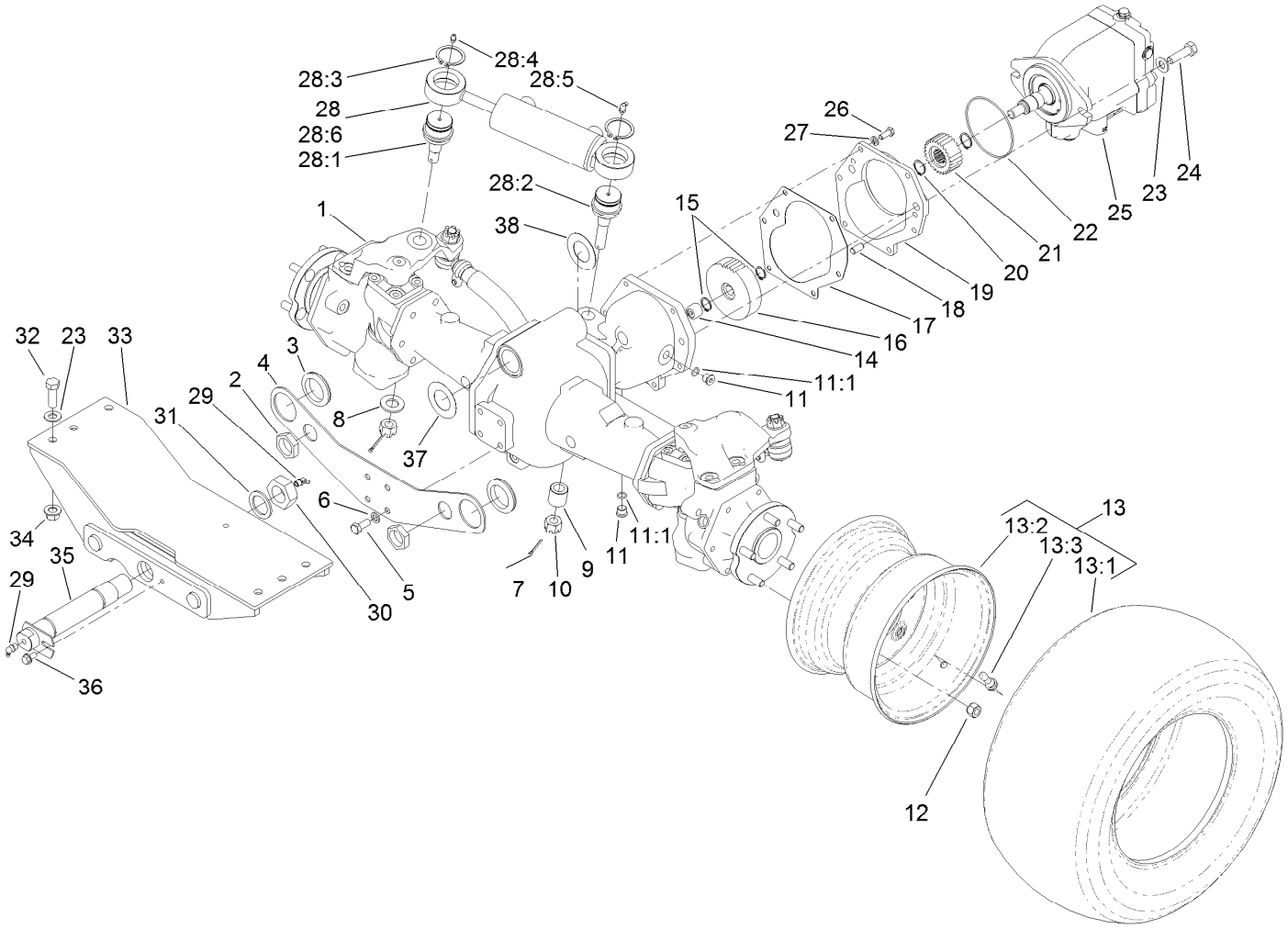

Rear Axle and Steering Cylinder Assembly (continued)

Ref.	Part Number	Qty.	Description
28:5	302-60	1	Fitting-Grease
28:6	121-1534	1	HYD Steering Cylinder ASM
29	302-33	2	Fitting-Grease
30	3296-68	1	Nut-Lock, NI
31	92-1765	1	Washer-Thrust
32	325-6	6	Screw-HH

Ref.	Part Number	Qty.	Description
33	120-8895-03	1	Mount-Rear
34	99-5107	6	Nut-Lock
35	98-7077	1	Pin-Axle, Rear
36	32144-14	1	Screw-HWHTF
37	99-8431	2	Washer-Thrust
38	99-8432	2	Washer-Thrust

● Not serviced separately

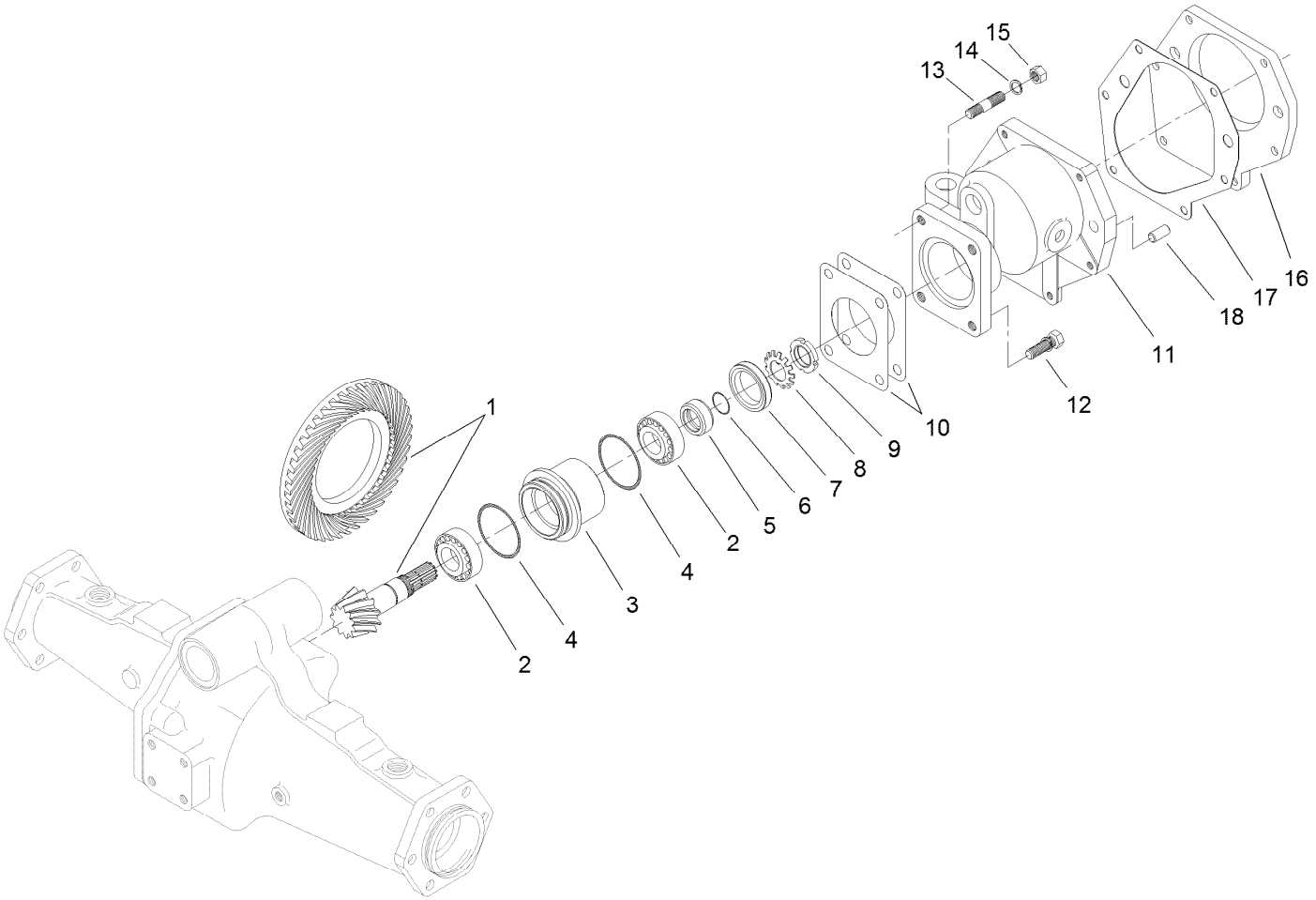

Bevel Pinion Shaft Assembly
Rear Axle Assembly No. 110-4750

Ref.	Part Number	Qty.	Description
1	106-1093	1	Ring And Pinion Set
2	99-7570	2	Bearing-Roller, Taper
3	95-7534	1	Case-Bearing
4	106-1065	2	O-Ring
5	99-7572	1	Collar-Seal, Oil
6	106-1066	1	O-Ring
7	99-7574	1	Seal-Oil
8	99-7559	1	Washer-Lock
9	99-7560	1	Nut-Lock
10	99-7550	2	Shim 0.1

Ref.	Part Number	Qty.	Description
10	99-7551	2	Shim 0.2
11	95-7533	1	Case-Gear
12	99-7575	2	Bolt
13	98-7735	2	Stud
14	99-7527	2	Washer-Spring
15	99-7526	2	Nut
16	95-7541	1	Plate-Cover
17	106-1140	1	Gasket
18	104-2353	2	Pin-Dowel

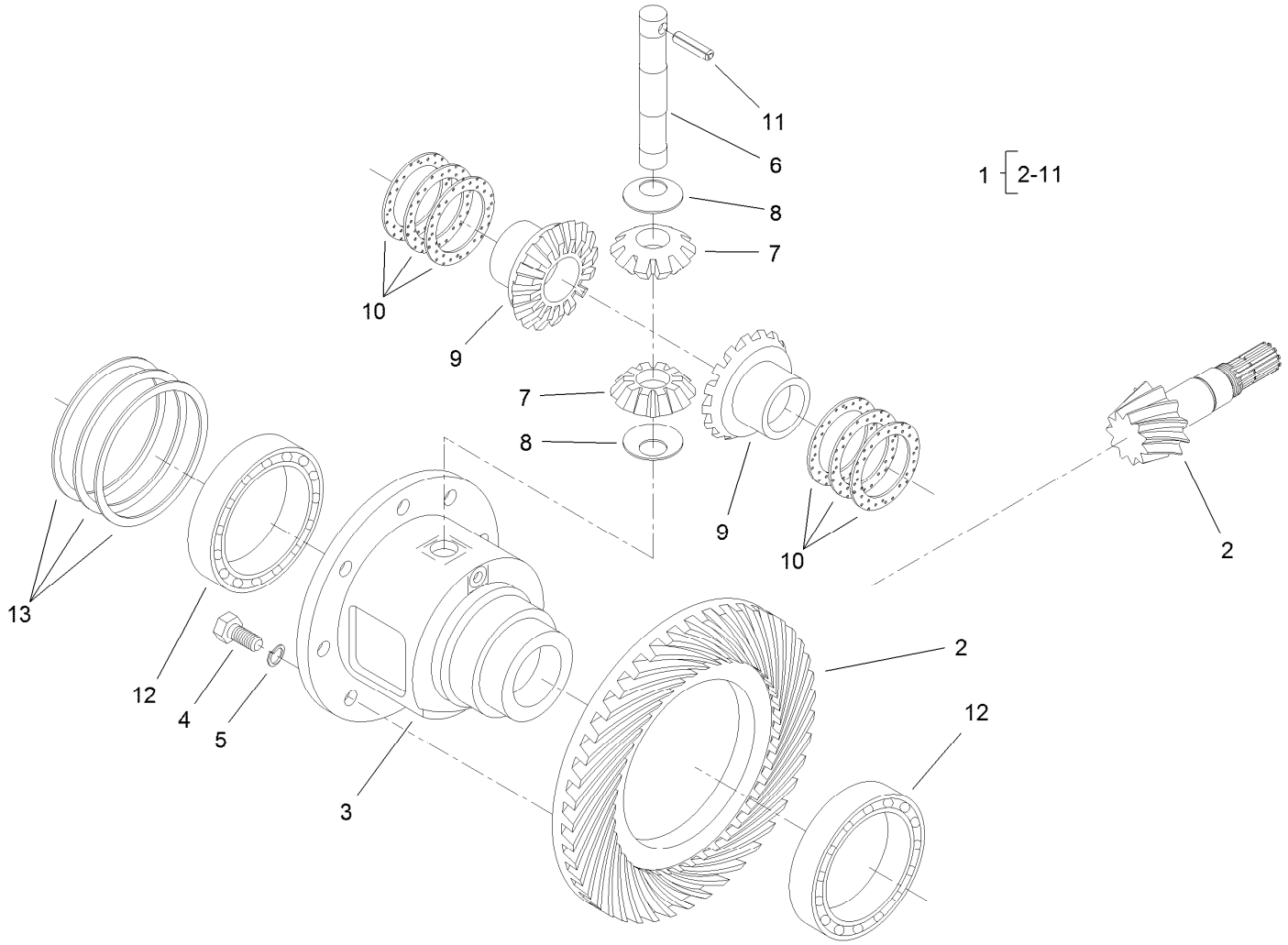

Differential Assembly
Rear Axle Assembly No. 110-4750

Ref.	Part Number	Qty.	Description
1	95-7503	1	Differential ASM
2	106-1093	1	Ring And Pinion Set
3	95-7502	1	Case-Differential
4	99-7576	8	Bolt
5	3253-4	8	Washer-Lock
6	99-7578	1	Shaft-Differential
7	99-7579	2	Pinion-Differential
8	99-7580	2	Washer-Differential
9	99-7581	2	Gear-Differential

Ref.	Part Number	Qty.	Description
10	99-7582	2	Washer-Differential
10	99-7583	2	Washer-Differential
10	99-7584	2	Washer-Differential
11	99-7588	1	Pin-Spring
12	99-7562	2	Bearing-Ball
13	99-7585	2	Shim 0.1
13	99-7586	2	Shim 0.2
13	99-7587	2	Shim 0.4

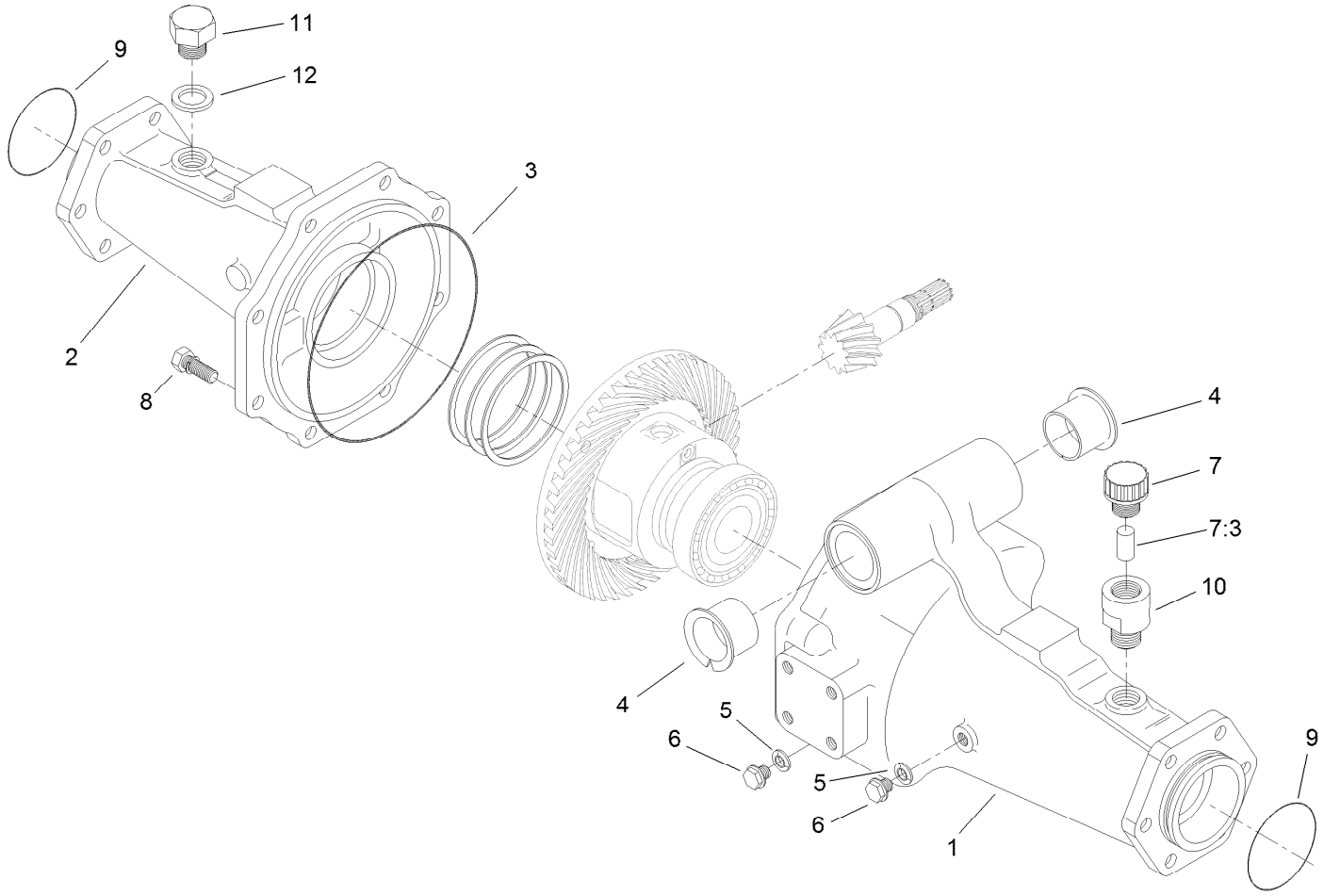

Axle Support Assembly
Rear Axle Assembly No. 110-4750

Ref.	*Part Number*	*Qty.*	*Description*
1	95-7508	1	Support-Axle
2	95-7506	1	Support-Axle
3	106-1067	1	O-Ring
4	95-7537	2	Bushing-Flanged
5	99-7590	2	Washer-Seal
6	99-7589	2	Plug
7	110-4812	1	Axle Vent ASM
7:3	110-4815	1	Insert-Filter, Foam
8	99-7592	8	Bolt
9	106-1068	2	O-Ring
10	104-2377	1	Extension-Vent
11	104-8643	1	Plug
12	104-8644	1	O-Ring

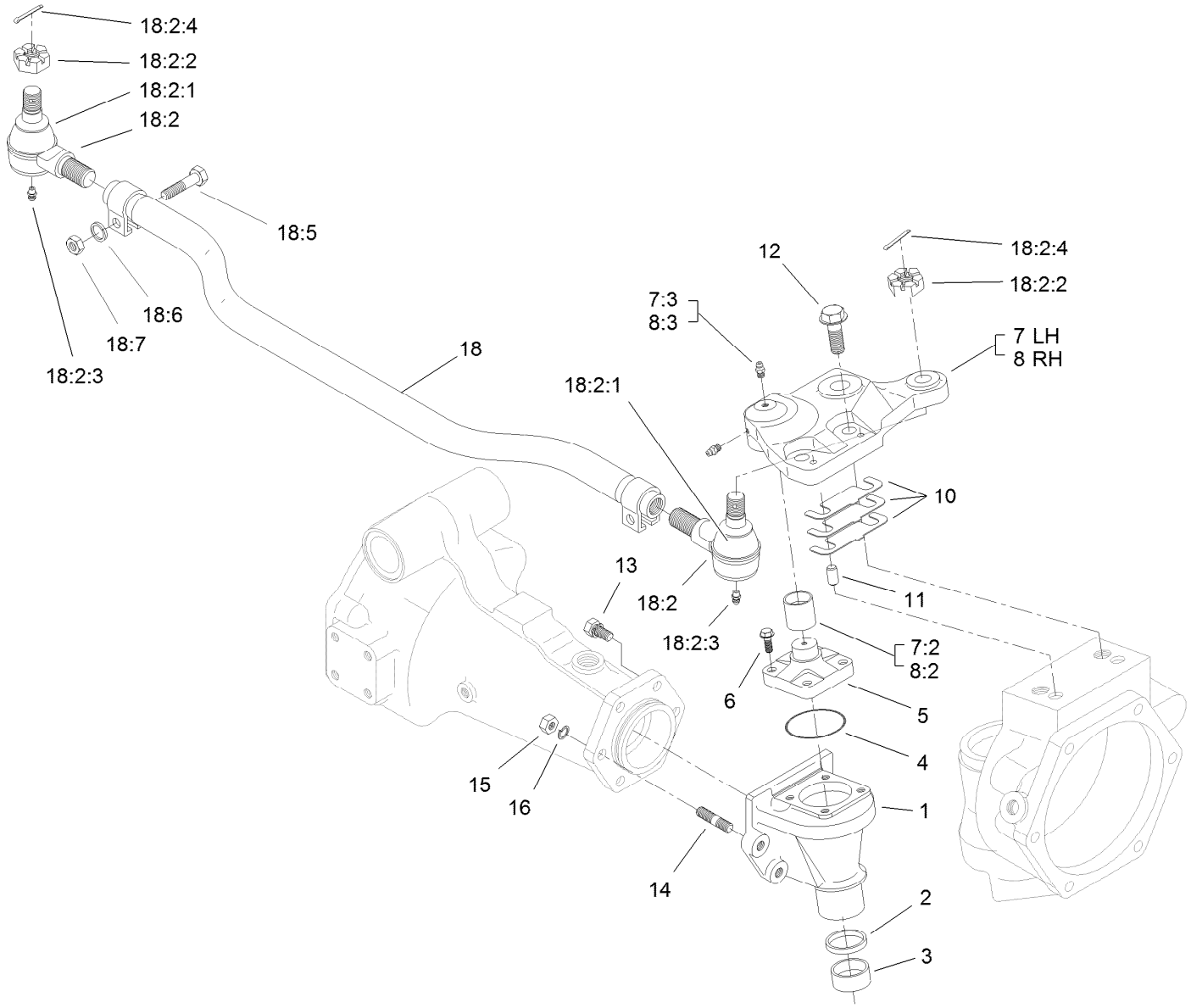

Bevel Gear Case Assembly
Rear Axle Assembly No. 110-4750

Ref.	Part Number	Qty.	Description
1	110-4752	2	Case-Gear, Bevel
2	110-4754	2	Seal-Oil
3	104-2378	2	Bushing
4	106-1069	2	O-Ring
5	104-2373	2	Knuckle
6	104-2374	8	Bolt
7	100-3768	1	LH Steering Arm ASM
7:2	104-8634	1	Bushing
7:3	106-1104	2	Fitting-Grease
8	100-3766	1	RH Steering Arm ASM
8:2	104-8634	1	Bushing
8:3	106-1104	2	Fitting-Grease
10	95-7547	2	Shim 0.1
10	95-7548	2	Shim 0.2
10	95-7549	2	Shim 0.3
11	99-7597	4	Pin-Dowel

Ref.	Part Number	Qty.	Description
12	104-2375	4	Bolt
13	99-7599	8	Bolt
14	99-7525	4	Stud
15	99-7526	4	Nut
16	99-7527	4	Washer-Spring
18	106-1141	1	Steering Tie Rod ASM
18:2	106-1113	2	Tie Rod End ASM - RH Thread
18:2:1	100-3853	1	Cover-Dust
18:2:2	100-3854	1	Nut-Castle
18:2:3	110-4755	1	Fitting-Grease
18:2:4	3272-11	1	Pin-Cotter
18:5	100-3855	2	Bolt
18:6	99-7527	2	Washer-Spring
18:7	99-7526	2	Nut

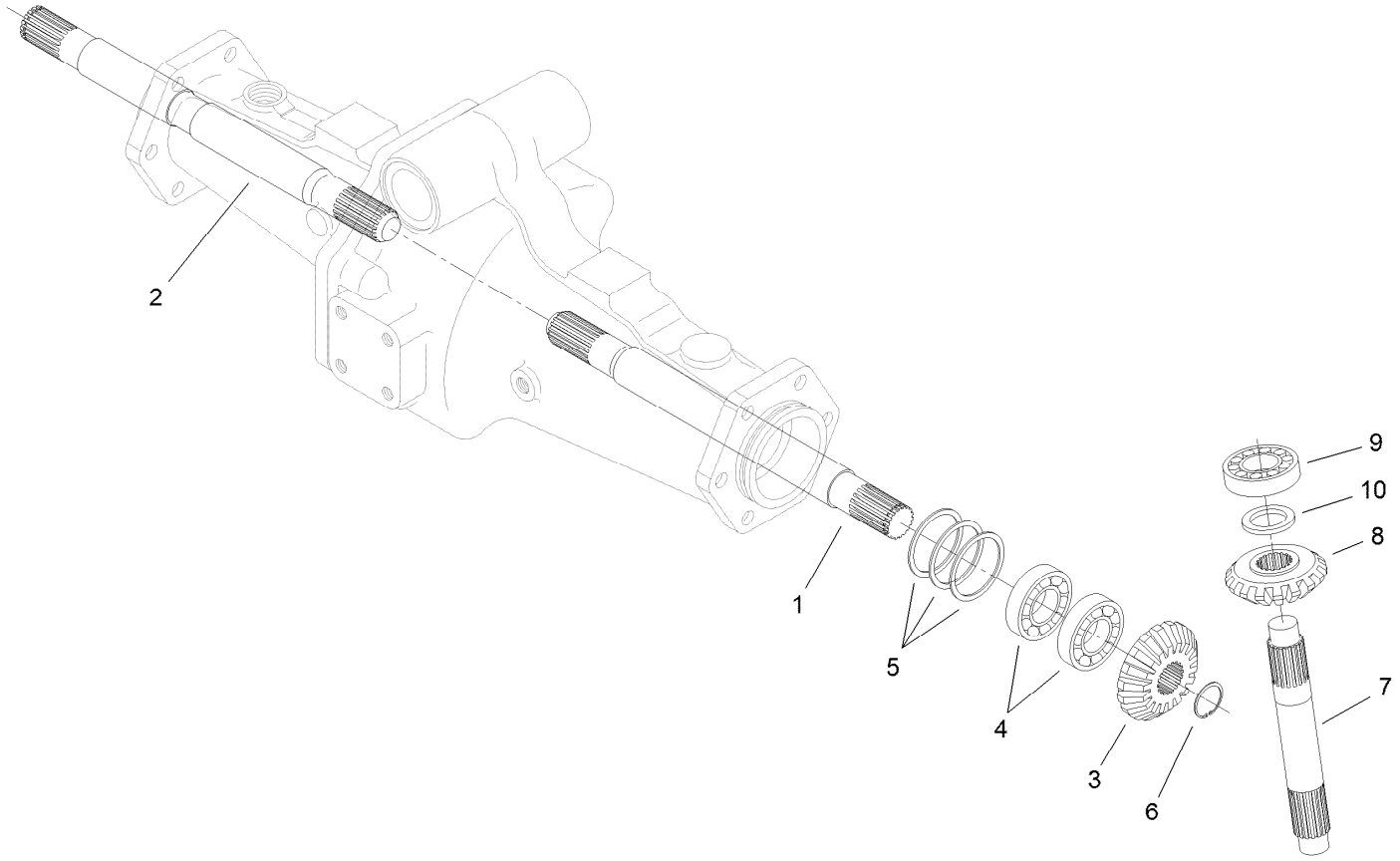

Bevel Gear Shaft Assembly
Rear Axle Assembly No. 110-4750

Ref.	*Part Number*	*Qty.*	*Description*
1	95-7509	1	Shaft-Gear, Differential
2	95-7512	1	Shaft-Gear, Differential
3	95-7517	2	Gear-Bevel, 15 Tooth
4	99-7530	4	Bearing-Ball
5	99-7552	2	Shim 0.1
5	99-7553	2	Shim 0.2
5	99-7554	2	Shim 0.5
6	99-7531	2	Clip
7	110-4753	2	Shaft-Gear, Bevel
8	95-7519	2	Gear-Bevel, 17 Tooth
9	99-7532	2	Bearing-Roller, Taper
10	99-7558	2	Collar

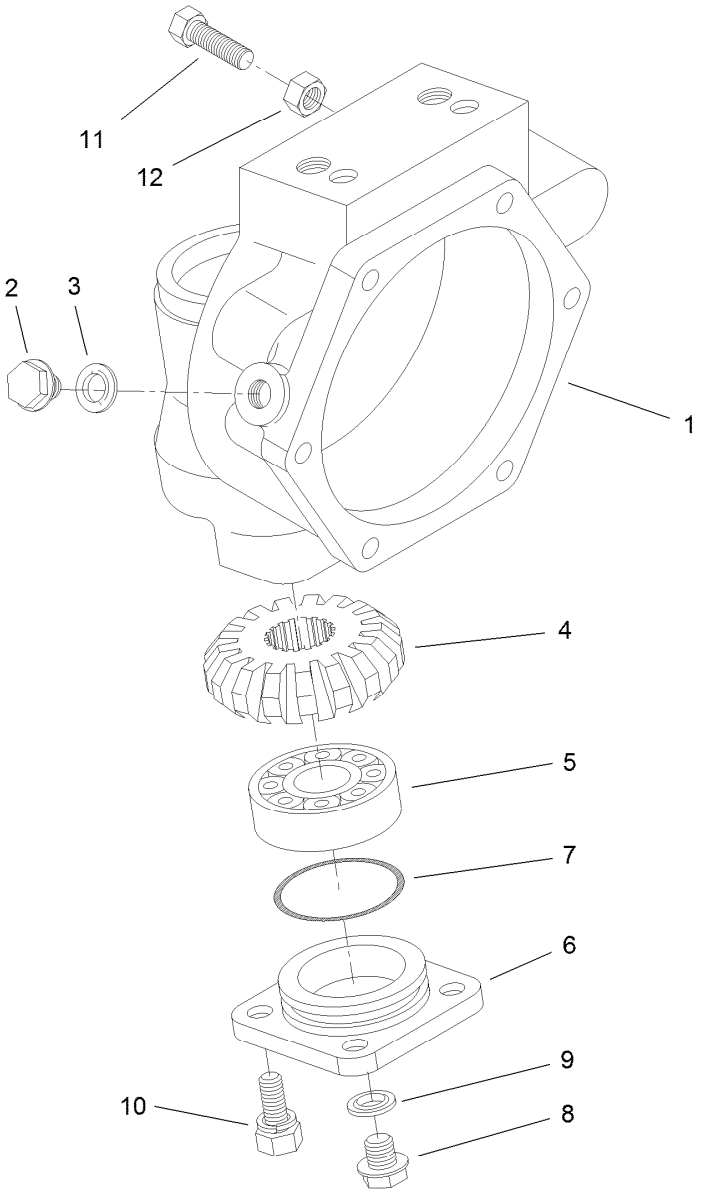

Axle Case Assembly
Rear Axle Assembly No. 110-4750

Ref.	*Part Number*	*Qty.*	*Description*
1	110-4751	2	Case-Axle
2	99-7535	2	Plug
3	99-7536	2	Washer-Seal
4	95-7527	2	Gear-Bevel, 17 Tooth
5	99-7532	2	Bearing-Roller, Taper
6	100-2560	2	Cover
7	106-1070	2	O-Ring
8	99-7589	2	Plug
9	99-7590	2	Washer-Seal
10	100-2562	8	Bolt
11	106-1102	2	Bolt-Stop
12	106-1103	2	Nut

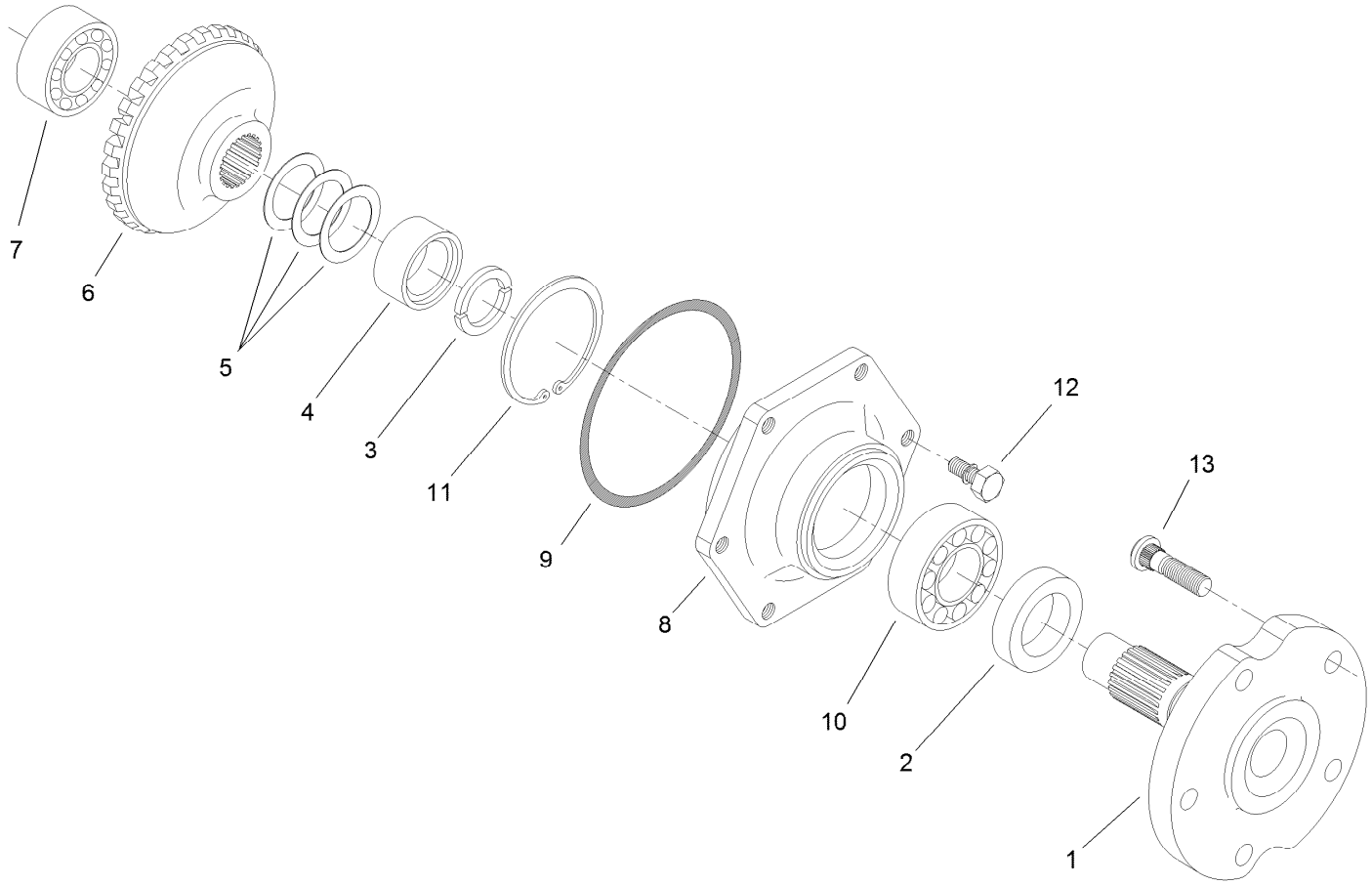

Axle Assembly
Rear Axle Assembly No. 110-4750

Ref.	*Part Number*	*Qty.*	*Description*
1	95-7522	2	Axle
2	99-7564	2	Seal-Oil
3	95-7544	4	Clip
4	95-7523	2	Spacer
5	99-7555	2	Shim 0.3
5	99-7556	2	Shim 0.2
5	99-7557	2	Shim 0.5
6	95-7524	2	Gear-Bevel, 29 Tooth
7	99-7534	2	Bearing-Ball
8	95-7521	2	Cover-Axle
9	106-1071	2	O-Ring
10	99-7561	2	Bearing-Ball
11	99-7539	2	Clip
12	99-7596	12	Bolt
13	99-7563	10	Stud

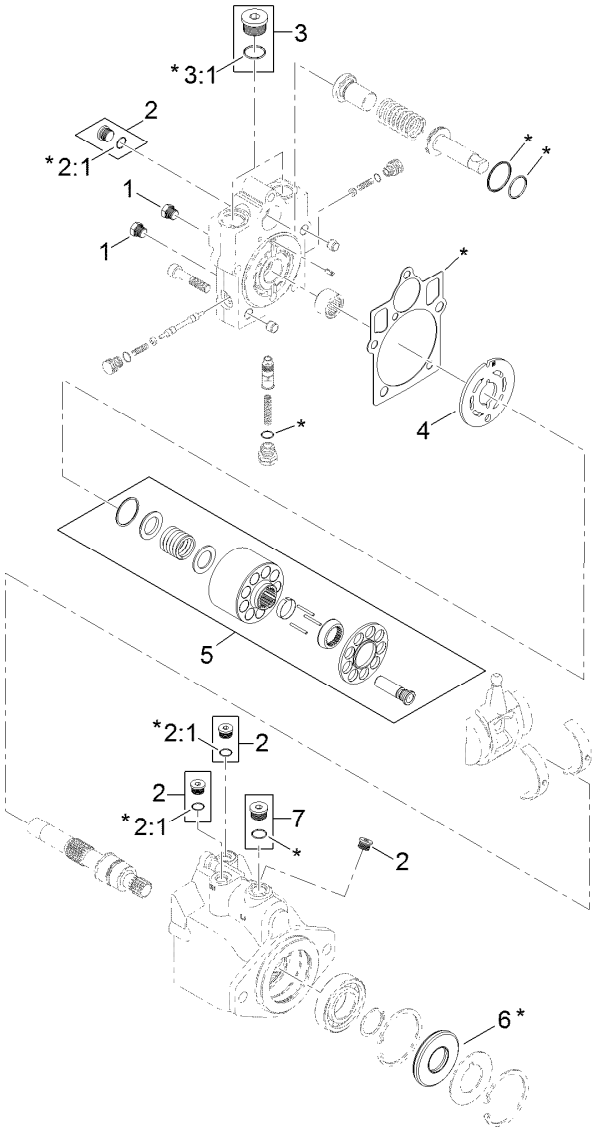

8 = all items with * are included in overhaul seal kit

Hydraulic Motor Assembly No. 120-8814

Ref.	*Part Number*	*Qty.*	*Description*
1	92-1352	2	Plug
2	69-3080	5	Plug
2:1		1	O-Ring ●
3	69-3130	2	Plug
3:1		1	O-Ring ●
4	121-1734	1	Plate-Valve
5	110-6472	1	Cylinder Block Kit ASM
6	69-3190	1	Seal-Lip
7	67-9090	1	Plug
8	121-1736	1	Overhaul Seal Kit

● Not serviced separately

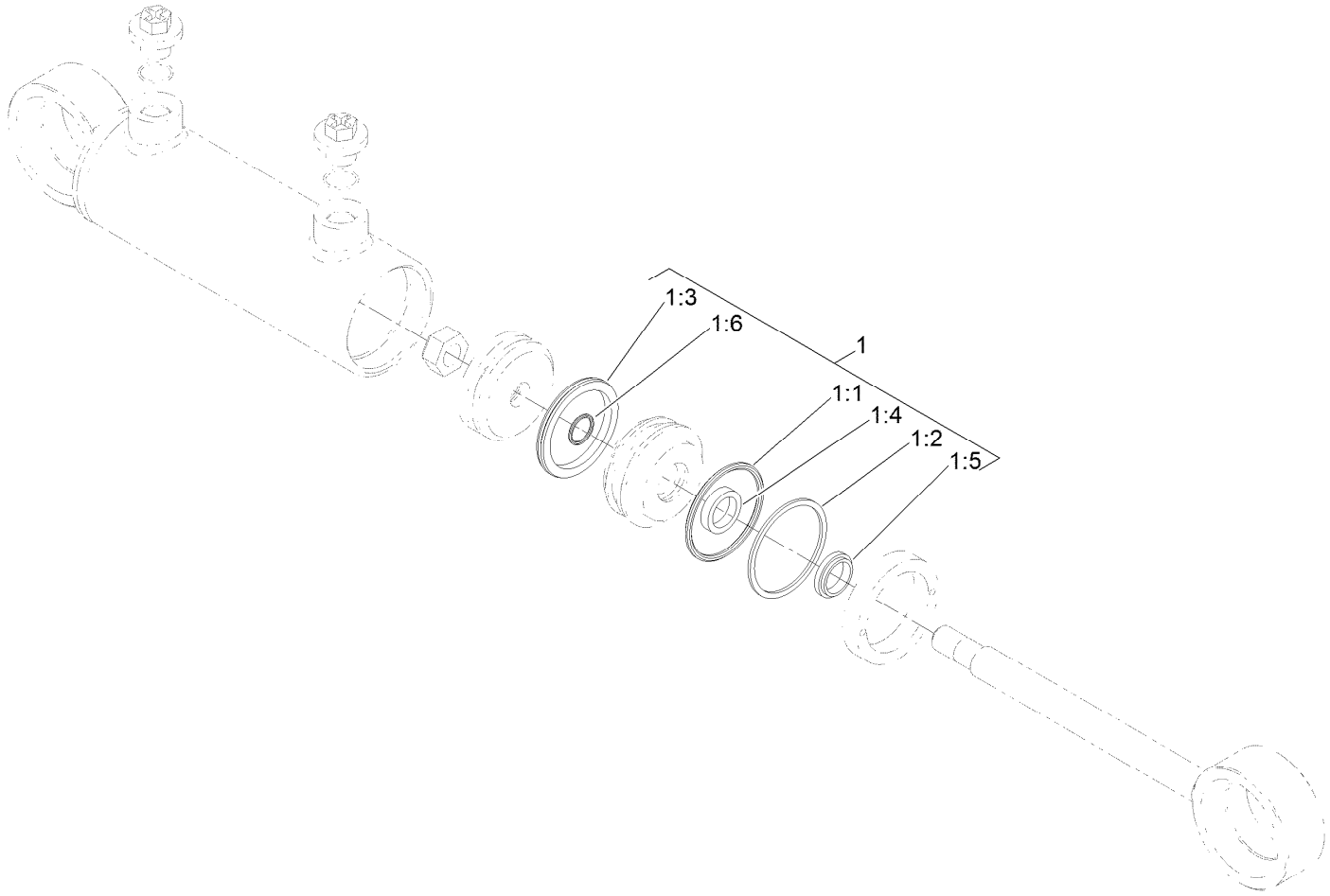

Steering Cylinder Assembly No. 121-1534

Ref.	*Part Number*	*Qty.*	*Description*
1	125-4302	1	Seal Kit
1:1		1	O-Ring ●
1:2		1	Backup ●
1:3		1	Bp Seal ●
1:4		1	Bt Seal ●
1:5		1	Dust Seal ●
1:6		1	O-Ring ●

● Not serviced separately

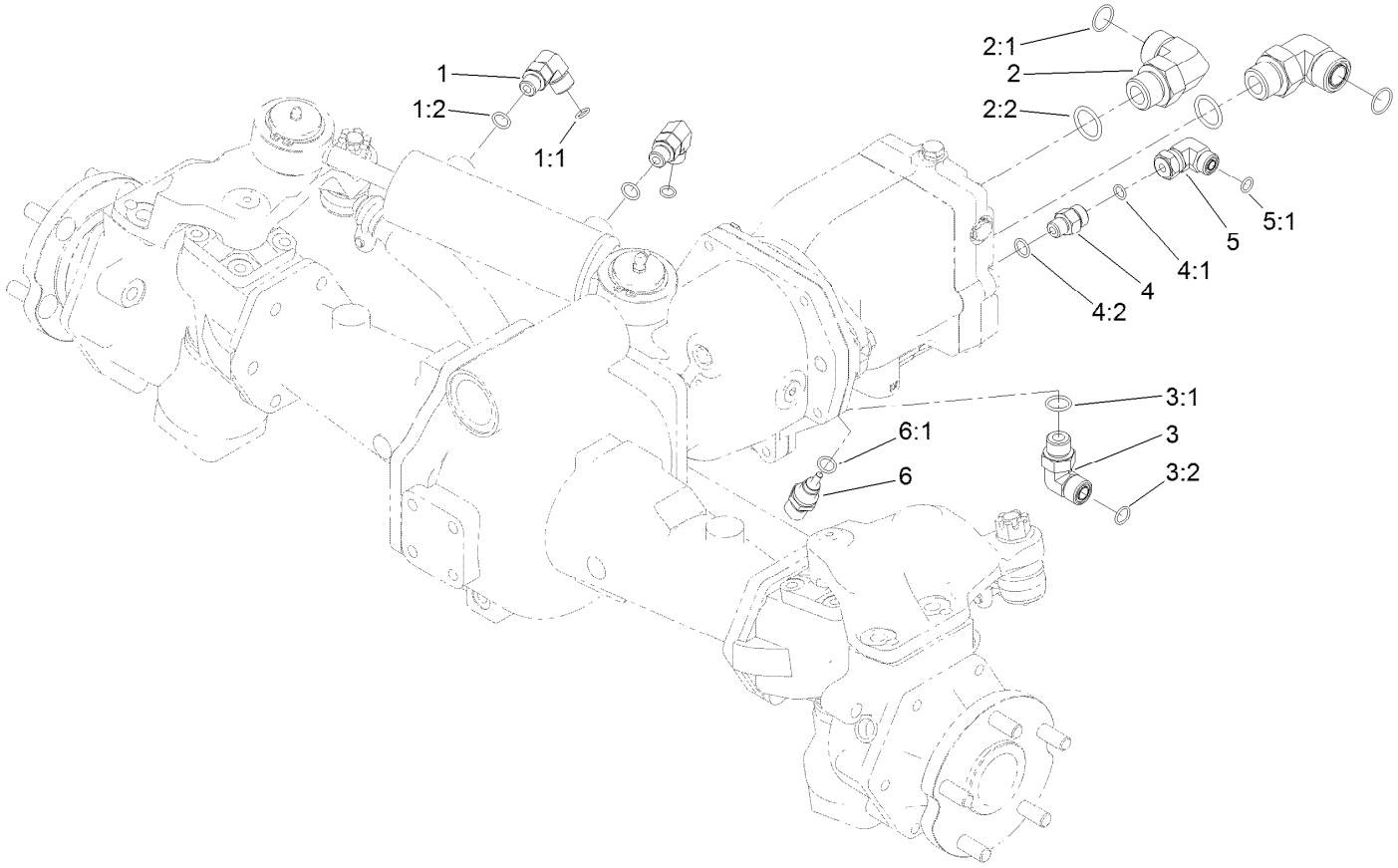

Hydraulic Fitting Assembly

Ref.	Part Number	Qty.	Description
1	340-77	2	Fitting-Elbow, 90 DEG
1:1	237-22	1	O-Ring
1:2	237-42	1	O-Ring
2	340-142	2	Fitting-Elbow-90
2:1	237-58	1	O-Ring
2:2	237-81	1	O-Ring
3	340-98	1	Fitting-Elbow, 90 DEG
3:1	237-79	1	O-Ring

Ref.	Part Number	Qty.	Description
3:2	237-30	1	O-Ring
4	340-2	1	Fitting-Straight
4:1	237-22	1	O-Ring
4:2	237-42	1	O-Ring
5	340-159	1	Fitting-HYD, 90 DEG
5:1	237-22	2	O-Ring
6	110-8829	1	Sender-Temperature
6:1	237-42	1	O-Ring

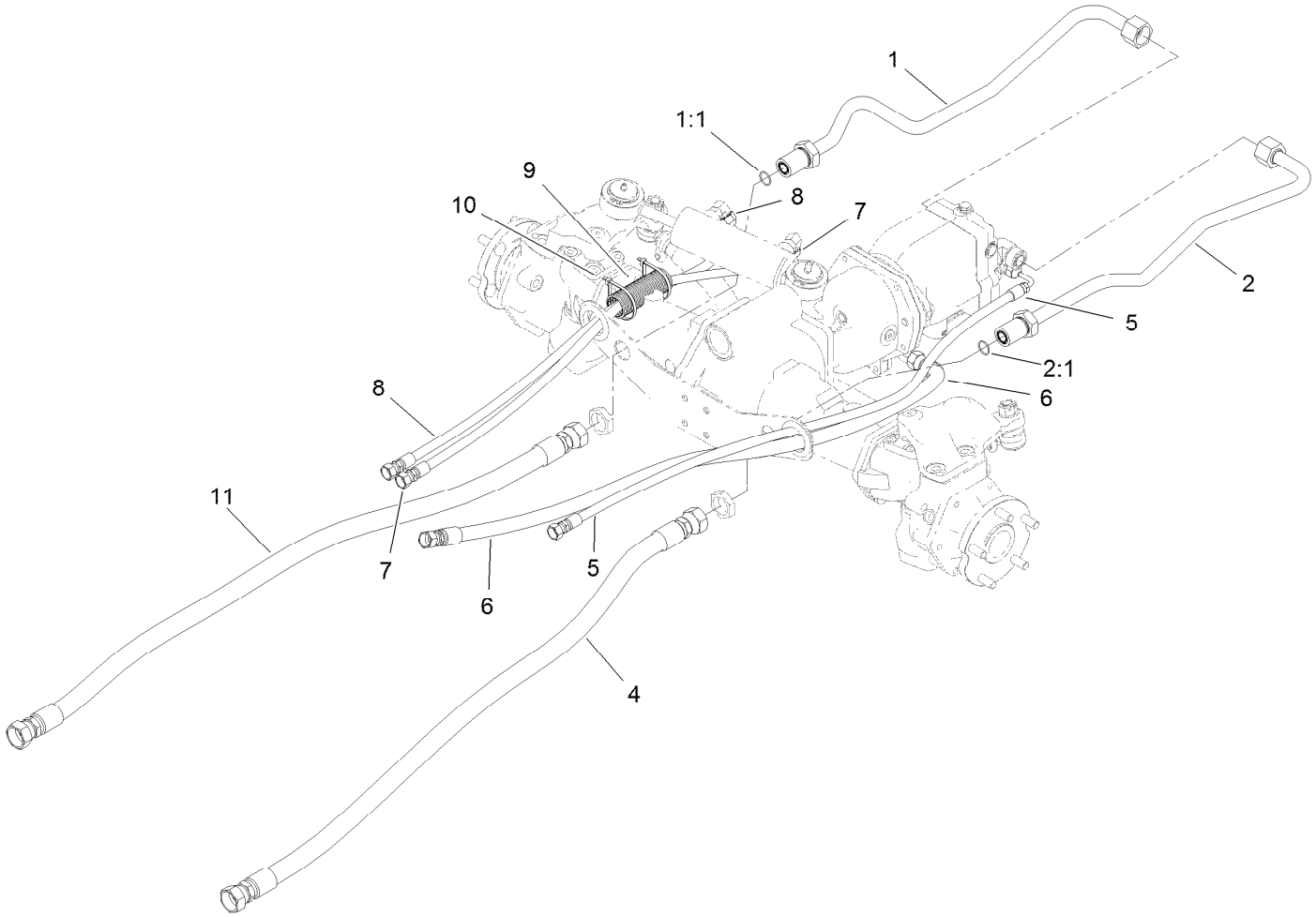

Hose and Tube Routing Assembly

Ref.	*Part Number*	*Qty.*	*Description*
1	120-9067	1	HYD Tube ASM
1:1	237-58	1	O-Ring
2	120-9068	1	Tube ASM
2:1	237-58	1	O-Ring
4	114-0024	1	Hose-HYD
5	121-1459	1	Hose-HYD
6	121-1458	1	Hose-HYD
7	121-1500	1	Hose-HYD
8	121-1501	1	Hose-HYD
9	121-1544	2	Cover-Hose
10	3290-379	4	Tie-Cable
11	121-1683	1	Hose-HYD

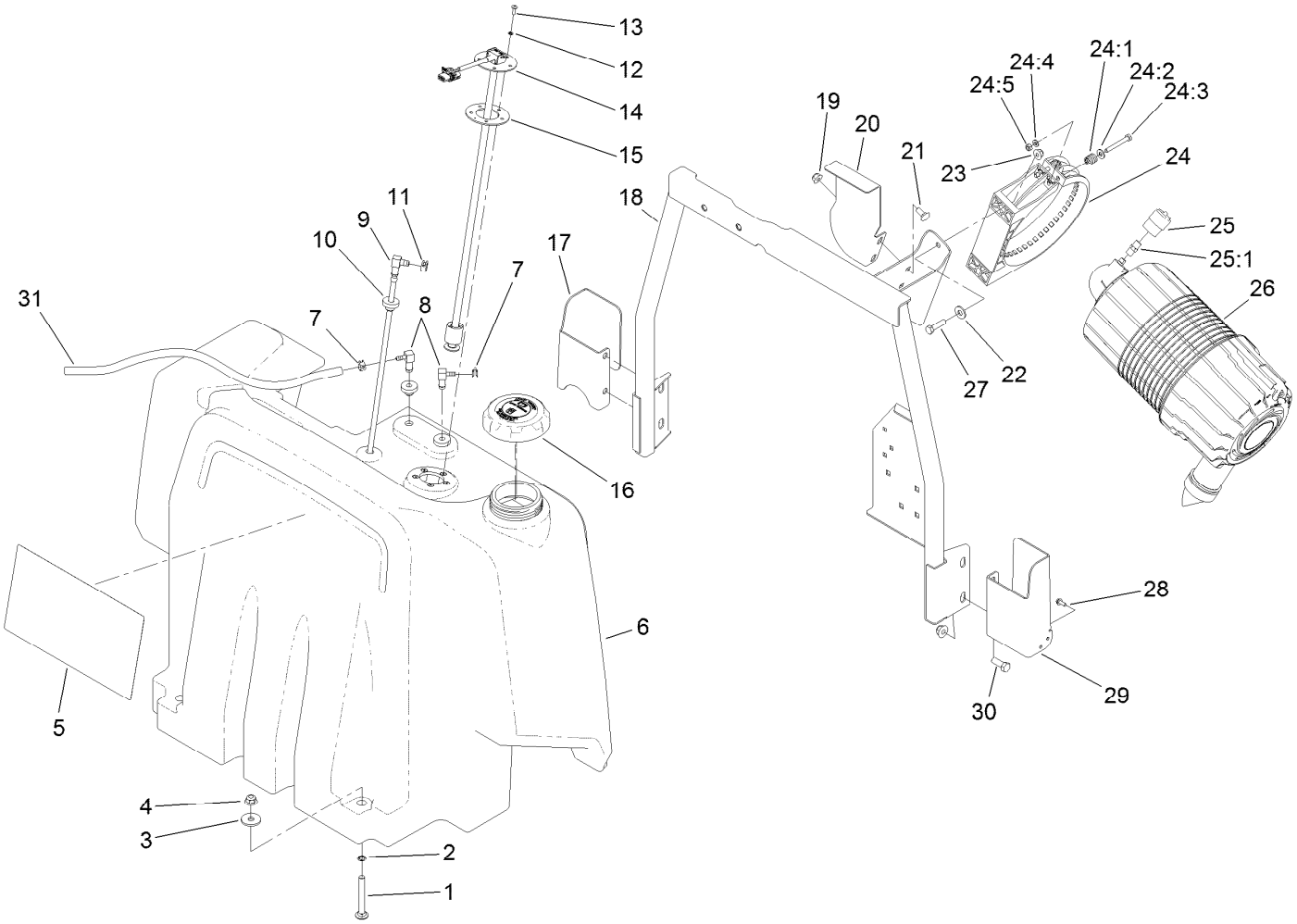

Fuel Tank and Air Cleaner Assembly

Ref.	Part Number	Qty.	Description
1	3231-10	2	Screw-CARR
2	32151-72	2	Ring-Retaining
3	63-8410	2	Washer
4	104-8301	6	Nut-HF, NI
5	121-1678	1	Decal-Service
6	120-4195	1	Tank-Fuel
7	2412-98	2	Clamp-Hose
8	104-5228	2	Fitting-Elbow, 90 DEG
9	120-8908	1	Pipe-Stand
10	46-6560	3	Bushing
11	92-2379	1	Clamp-Hose
12	3253-15	5	Washer-Lock
13	32122-24	5	Screw-PTH
14	121-1688	1	Gauge-Fuel
15	121-1707	1	Gasket-Fuel, Viton
16	119-8266	1	Cap-Fuel (Biodiesel)
17	121-1514-03	1	Bracket-Latch, RH
18	120-4190-03	1	Support-Tank
19	104-8300	2	Nut-HF, NI

Ref.	Part Number	Qty.	Description
20	120-4193-03	1	Bracket-Fuel Tank
21	3230-1	2	Bolt-CARR
22	3256-3	2	Washer-Flat
23	104-8300	2	Nut-HF, NI
24	99-5414	1	Strap-Cleaner, Air
24:1	108-1512	2	Spring
24:2	3256-22	2	Washer-Flat
24:3	33113-050	2	Screw-HH
24:4	33093-00	2	Washer-Flat
24:5	33023-00	2	Nut-Lock
25	104-3563	1	Indicator
25:1	94-1416	1	Adapter-Indicator
26	99-5410	1	Air Cleaner ASM
27	322-6	2	Screw-HH
28	32144-1	4	Screw-Taptite
29	121-1513-03	1	Bracket-Latch, LH
30	323-6	4	Screw-HH
31	110-5701	1	Hose-Fuel

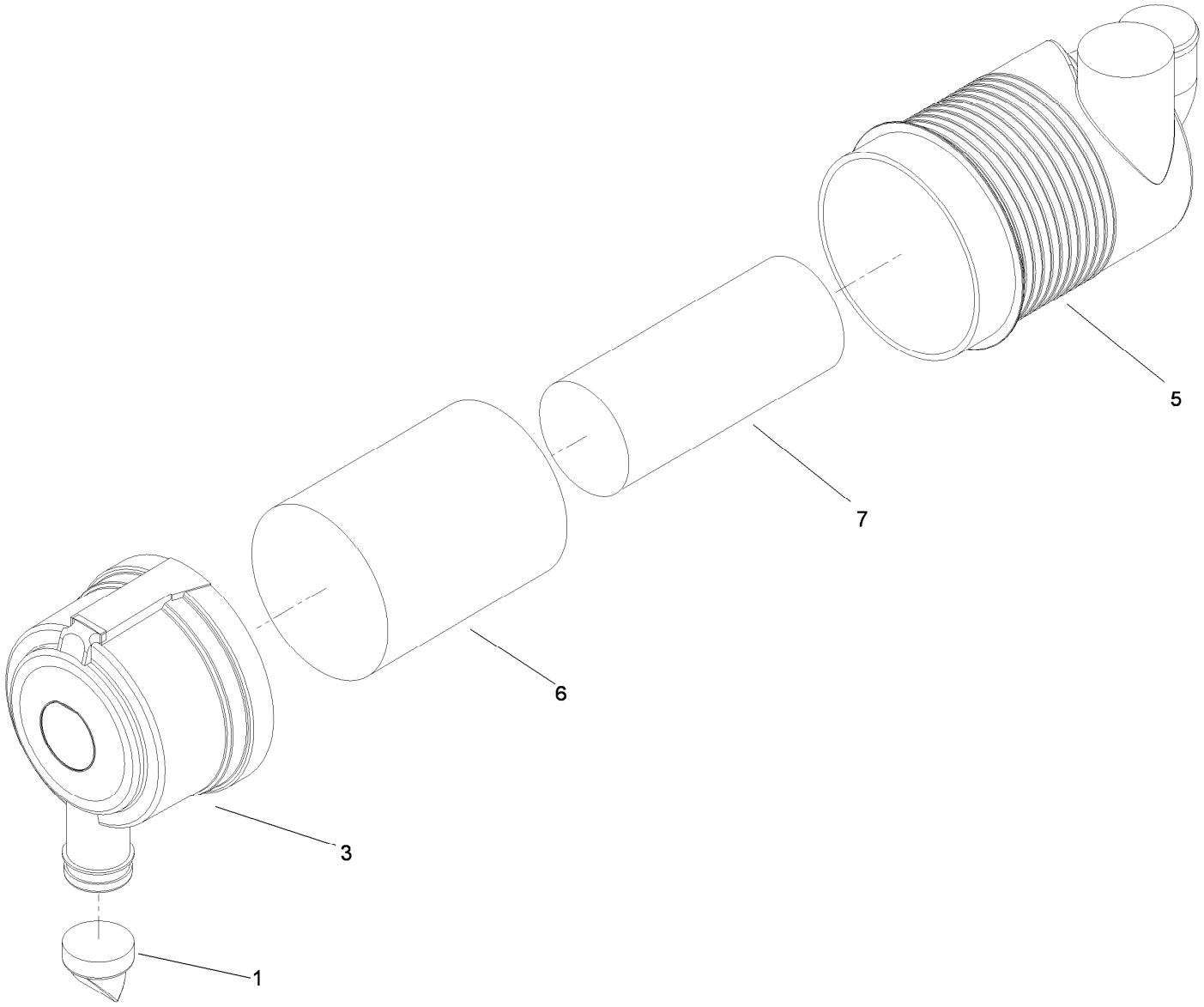

Air Cleaner Assembly No. 99-5410

Ref.	*Part Number*	*Qty.*	*Description*
1	104-4258	1	Valve-Vacuator
3	104-4259	1	Cover
5		1	Body ASM ●
6	108-3814	1	Filter-Air
7	108-3816	1	Filter-Air

● Not serviced separately

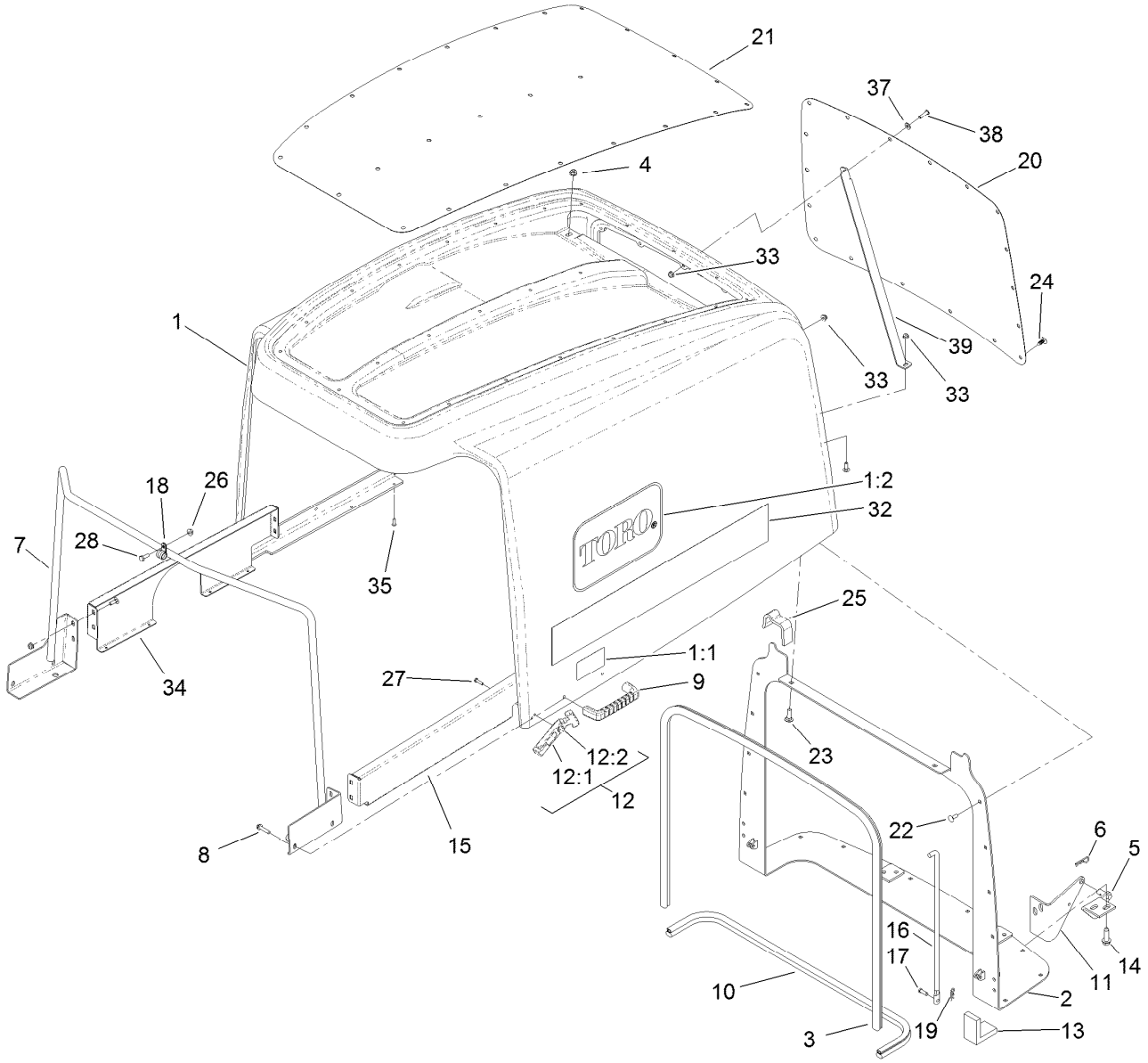

Hood and Screen Assembly

Ref.	Part Number	Qty.	Description
1	120-9090	1	Hood ASM
1:1	106-6754	1	Decal-Danger
1:2	66-1210	2	Decal
2	120-9099-03	1	Pivot-Hood
3	114-3823	1	Seal-Bulb
4	104-8300	2	Nut-HF, NI
5	121-1470	2	Pivot-Screen
6	3290-467	2	Pin-Hair
7	120-4196-03	1	Support-Hood
8	46-8092	4	Screw-Plastite
9	65-5100	2	Handle-Door
10	104-3590	1	Seal-Bulb
11	104-3588-03	2	Pivot-Screen
12	94-5626	2	Flexible Draw Latch ASM
12:1	103-4080	1	Latch-Rubber
12:2	103-4081	1	Latch-Keeper
13	104-3580	2	Seal-Corner, Screen
14	32144-109	8	Screw-Taptite
15	120-8949-03	1	Support-Hood, LH
16	104-8313	2	Rod-Hood
17	283-67	2	Pin-Clevis
18	2412-134	2	Clamp-R
19	3290-307	2	Pin-Cotter
20	120-9096-03	1	Screen-Hood, Rear
21	120-9097-03	1	Screen-Hood, Top
22	3229-1	24	Bolt-CARR
23	3230-2	2	Bolt-CARR
24	117-2382	42	Plug-Plastic
25	120-9087	2	Seal-Foam
26	32128-33	2	Nut-HF
27	32104-4	2	Screw
28	321-4	2	Screw-HH
32	105-7360	2	Decal-Hood
33	104-7201	25	Nut-HF
34	120-8948-03	1	Support-Hood, RH
35	3269-4	8	Rivet-Pop
37	3256-1	1	Washer-Flat
38	3274-65	1	Screw-HSBH
39	127-3707-03	1	Support-Hood

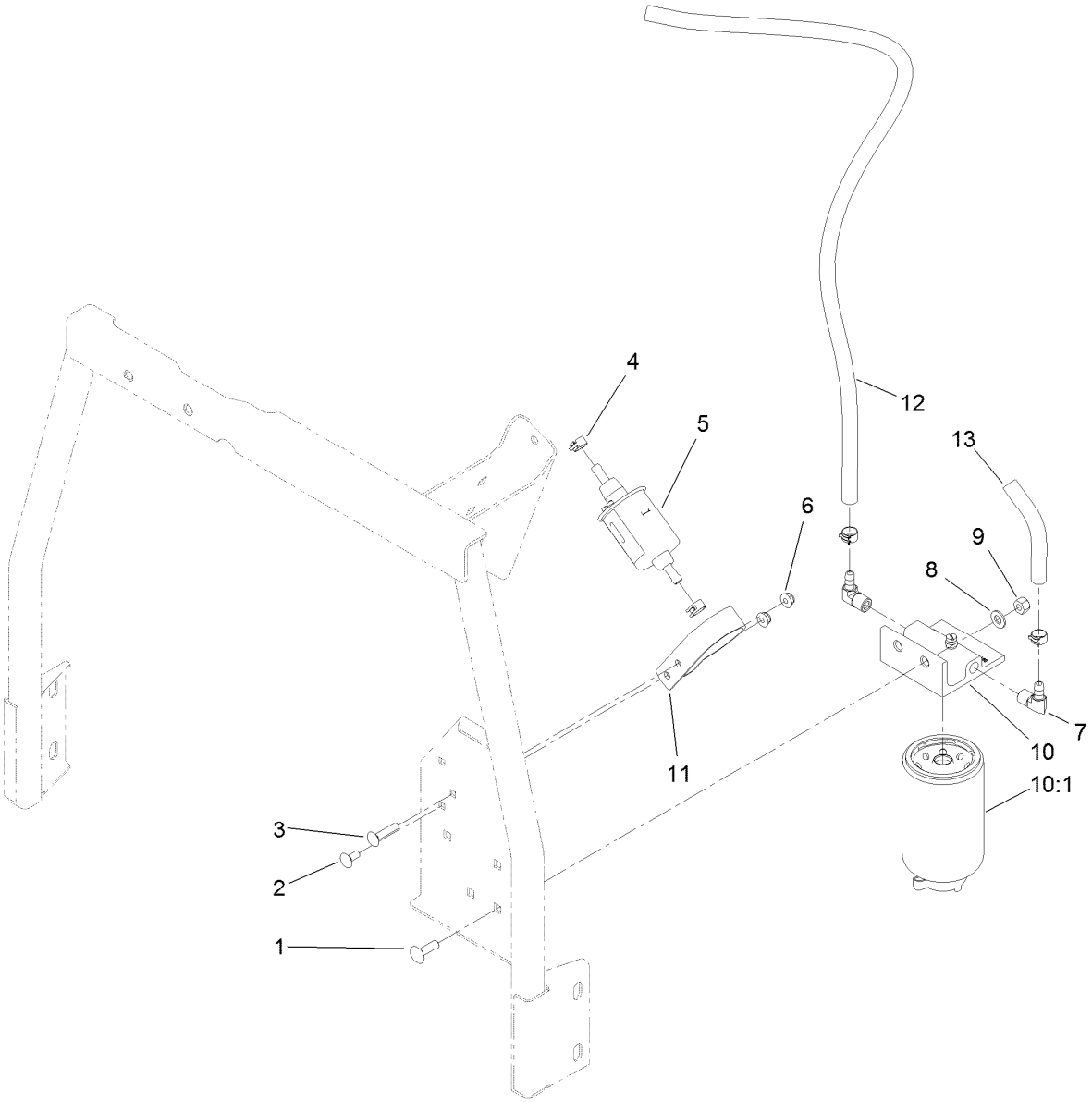

Fuel / Water Seperator Assembly

Ref.	Part Number	Qty.	Description
1	3230-22	2	Screw-CARR
2	3229-11	1	Screw-CARR
3	3229-3	1	Screw-CARR
4	92-2379	4	Clamp-Hose
5	110-8806	1	Pump-Fuel
6	104-7201	2	Nut-HF
7	353-781	2	Fitting-Elb, 90
8	3256-23	2	Washer-Plain
9	3296-29	2	Nut-Lock, NI
10	110-9044	1	Separator-Filter
10:1	110-9049	1	Filter-Spin On
11	110-8817	1	Bracket-Pump, Fuel
12	110-6186	1	Hose-Fuel
13	110-3256	1	Hose-Fuel

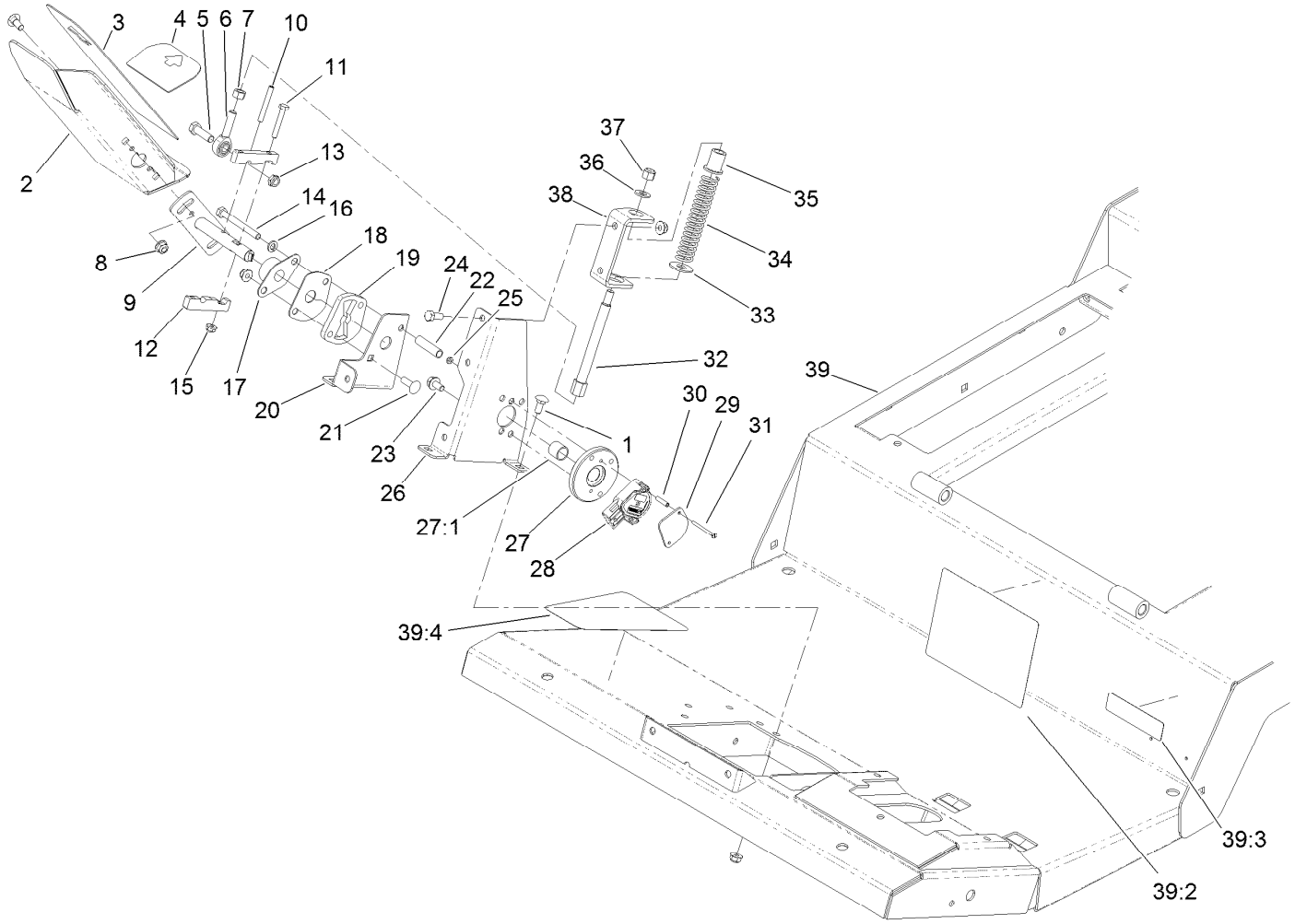

Traction Pedal Assembly

Ref.	Part Number	Qty.	Description
1	3230-1	6	Bolt-CARR
2	110-5986-01	1	Pedal-Traction
3	93-5347	1	Abrasive-Pedal
4	93-5368	1	Abrasive-Pedal
5	323-7	1	Screw-HH
6	2411-36	1	Bearing-End, Rod
7	3219-3	1	Nut-Hex
8	104-8300	10	Nut-HF, NI
9	117-5450	1	Shaft-Pedal, Traction
10	32121-78	1	Pin-Roll
11	321-37	2	Screw-HH
12	117-5459	2	Block-Clamp
13	3296-59	1	Nut-Lock, NI
14	322-14	1	Screw-HH
15	104-7201	2	Nut-HF
16	3253-4	1	Washer-Lock
17	256-236	1	Bearing-Mount, Flange
18	117-5455	1	Plate-Cover
19	117-5454	1	Plate-Butterfly
20	117-5453-01	1	Bracket-Butterfly
21	3230-22	1	Screw-CARR

Ref.	Part Number	Qty.	Description
22	93-7960	1	Spacer
23	114-7728	2	Screw-Threadlock
24	322-3	5	Screw-HH
25	3296-9	6	Nut-Hex
26	117-5451-01	1	Bracket-Sensor
27	117-5445	1	Bushing Hub ASM
27:1	95-7497	1	Bushing-Wheel
28	114-5609	1	Sensor-Position
29	114-5595	1	Plate-Capture
30	114-5608	2	Spacer-Standoff
31	32105-25	2	Screw-SHH
32	117-5446	1	Shaft-Spring
33	3256-5	1	Washer-Flat
34	84-9100	1	Spring
35	92-7610	1	Retainer-Spring
36	3256-24	1	Washer-Flat
37	3296-6	1	Nut-Lock
38	117-5452-01	1	Bracket-Spring
39	120-4087	1	Platform ASM
39:2	114-0846	1	Decal-Instructions, Operating

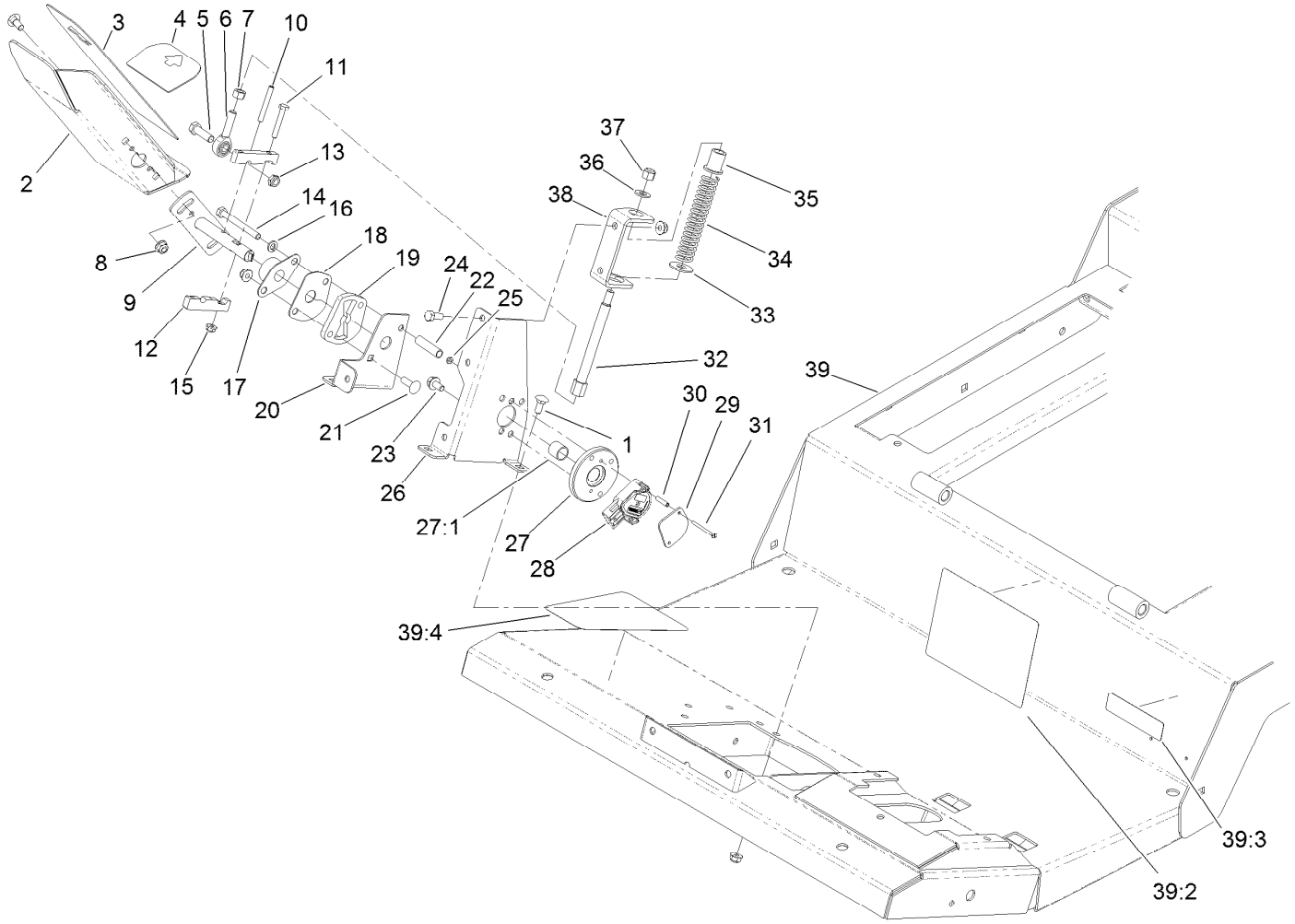

Traction Pedal Assembly (continued)

Ref.	*Part Number*	*Qty.*	*Description*
39:3	117-2718	1	Decal-Arrester, Spark
39:4	114-0849	1	Decal-Pedal, Traction

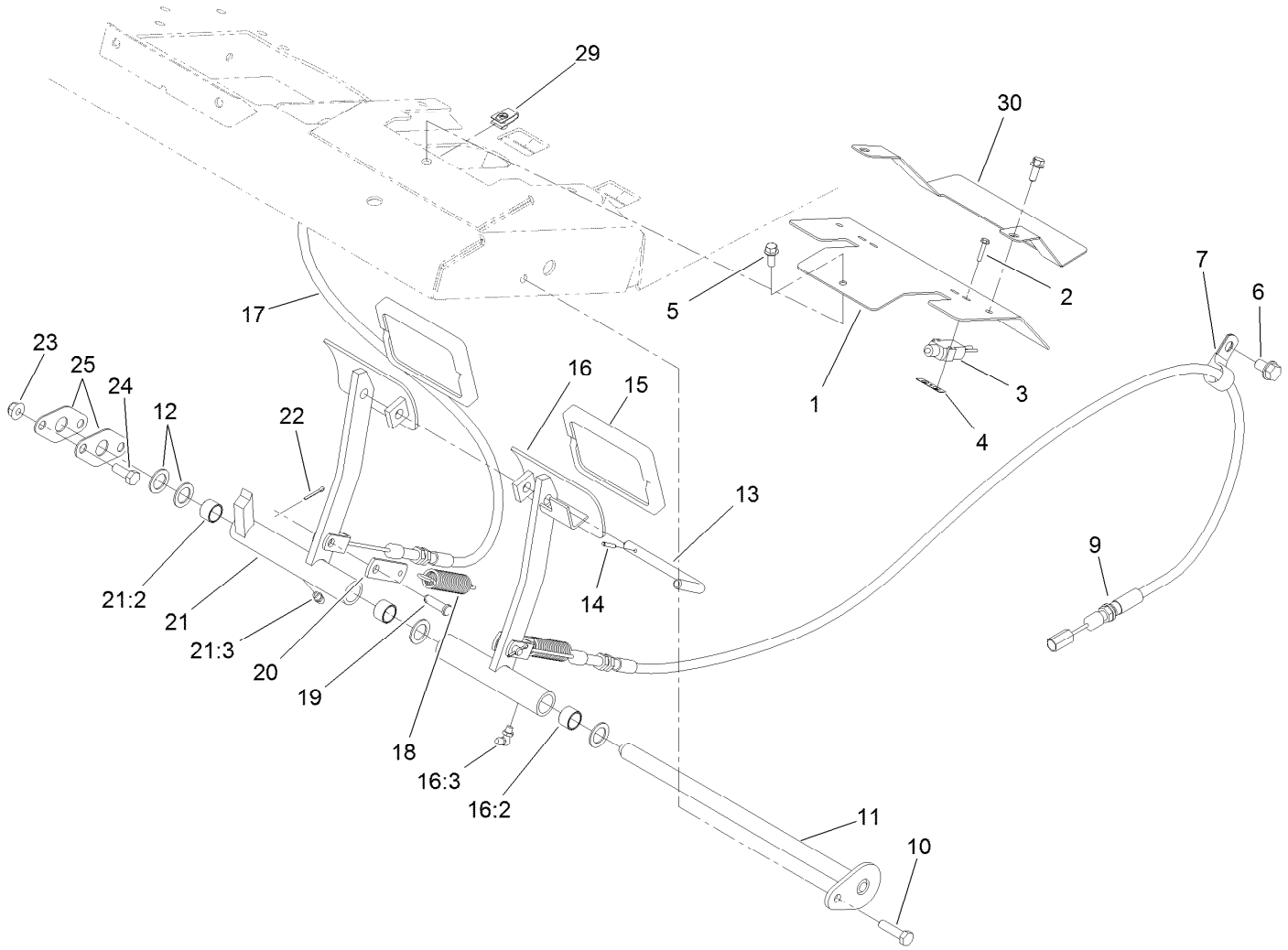

Brake Pedal Assembly

Ref.	Part Number	Qty.	Description
1	120-4163-01	1	Cover-Brake
2	117-5458	4	Screw-HHF
3	99-3410	2	Switch
4	108-9824	2	Nut-Switch
5	3234-33	3	Screw-HHF
6	32144-69	2	Screw-HWHTF
7	2412-4	2	Clamp-R
9	120-8899	1	Cable-Brake, LH
10	322-6	1	Screw-HH
11	120-4167	1	Pin-Flag
12	3256-69	4	Washer-Flat
13	63-7880	1	Pin-Latch, Brake
14	32121-50	1	Pin-Spring
15	93-8742	2	Footpad-Brake
16	120-4170	1	LH Brake Pedal ASM

Ref.	Part Number	Qty.	Description
16:2	256-42	2	Bushing
16:3	302-60	1	Fitting-Grease
17	120-8898	1	Cable-Brake, RH
18	93-5262	2	Spring-Extension
19	283-61	2	Pin-Yoke
20	100-5540	2	Strap-Brake
21	75-1430	1	RH Brake Pedal ASM
21:2	256-42	2	Bushing
21:3	302-5	1	Fitting-Grease
22	3272-6	2	Pin-Cotter
23	104-8300	3	Nut-HF, NI
24	322-4	2	Screw-HH
25	120-4168	2	Plate-Support
29	107069	3	Clip
30	121-1596-01	1	Cover-Brakes

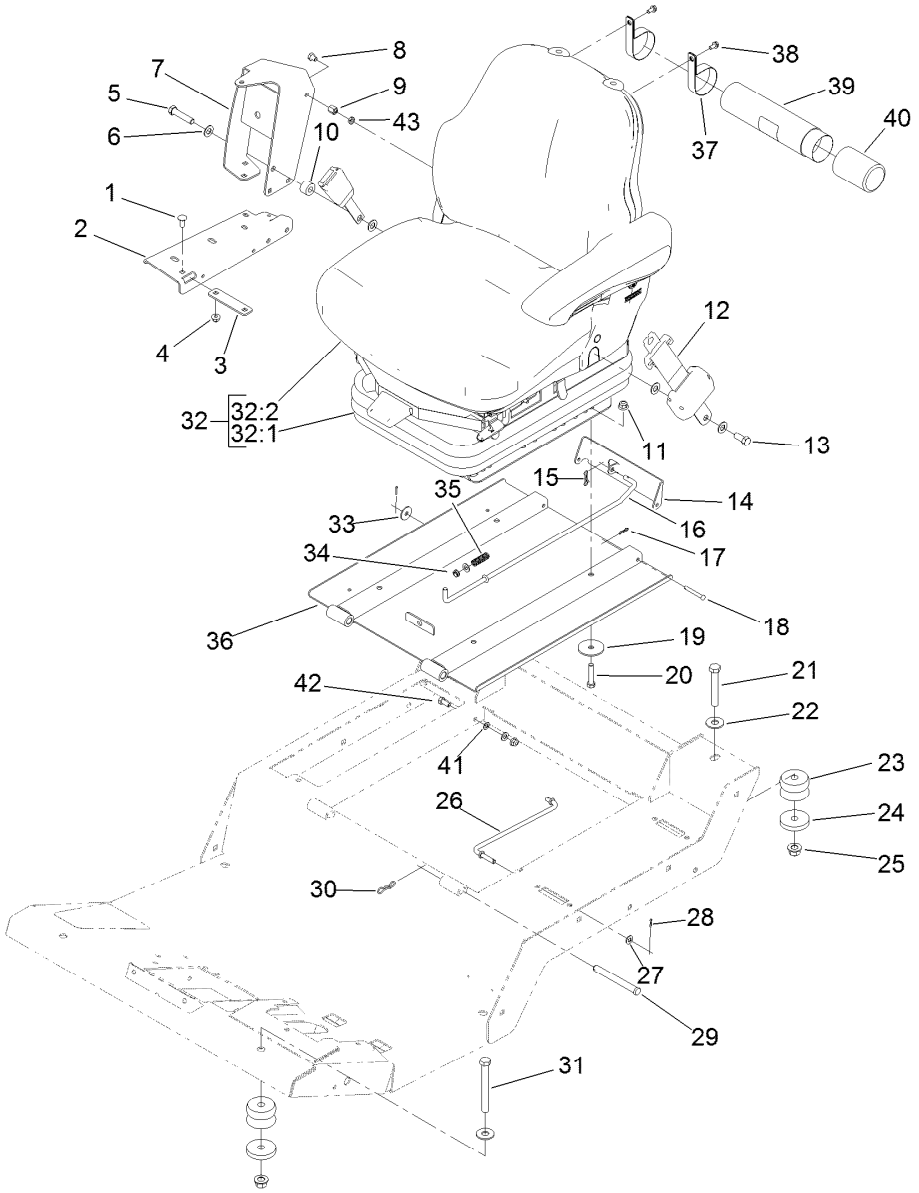

Seat Base and Seat Assembly

Ref.	Part Number	Qty.	Description
1	3230-23	6	Screw-CARR
2	119-0000-03	1	Channel-Support
3	112-7449-03	1	Bracket-Support
4	104-8300	6	Nut-HF, NI
5	3212-8	1	Screw-HH
6	3256-25	4	Washer-Flat
7	117-4798-03	1	Arm-Support
8	108-8646	1	Screw-HH, Lock
9	112-7405	1	Nut-Hex, Coupling
10	17-7190	1	Spacer-Finger
11	104-8301	4	Nut-HF, NI
12	110-0413	1	Seatbelt-Retractable
13	3212-4	1	Screw-HH
14	120-9017-03	1	Latch-Seat
15	119-1415	1	Pin-Cotter, Locking
16	120-9018	1	Rod-Latch
17	119-1414	2	Pin-Cotter, Locking
18	283-57	2	Pin-Clevis
19	83-1040	4	Washer-Flat
20	323-9	4	Screw-HH
21	112-7264	2	Screw-HH

Ref.	Part Number	Qty.	Description
22	3256-6	4	Washer-Flat
23	110-5954	4	Mount-Center, Bonded
24	115-5519	4	Washer-Plain
25	99-5107	4	Nut-Lock
26	93-5338	1	Rod-Prop
27	3256-23	3	Washer-Plain
28	3272-5	2	Pin-Cotter
29	283-83	2	Pin-Clevis
30	119-1416	2	Pin-Cotter, Locking
31	702093	2	Screw-HH
32	117-5677	1	Seat And Suspension ASM
32:1	108-1488	1	Seat Suspension ASM
32:2	117-5676	1	Premium Seat ASM
33	3256-82	1	Washer-Flat
34	5979	1	Bushing-Nyliner
35	95-1821-03	1	Spring-Compression
36	120-4078-03	1	Plate-Seat
37	2412-133	2	Clamp-R
38	32104-116	2	Screw-HWHTF
39	104-7050	1	Tube-Manual
40	104-7048	1	Cap-Housing

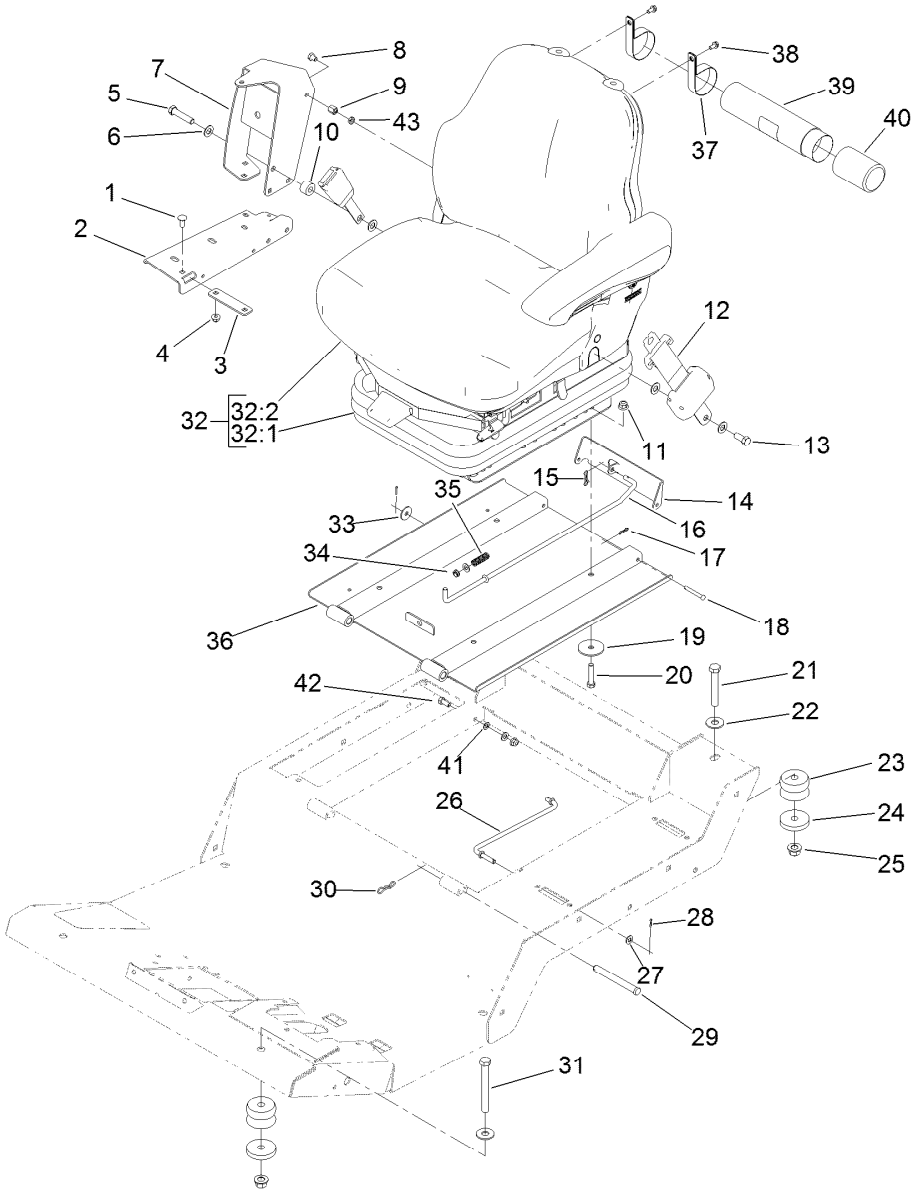

Seat Base and Seat Assembly (continued)

Ref.	Part Number	Qty.	Description
41	3255-8	1	Washer-Lock

Ref.	Part Number	Qty.	Description
42	322-3	1	Screw-HH
43	117-4059	1	Nut-Hex

Air Ride Seat Suspension Assembly No. 108-1488

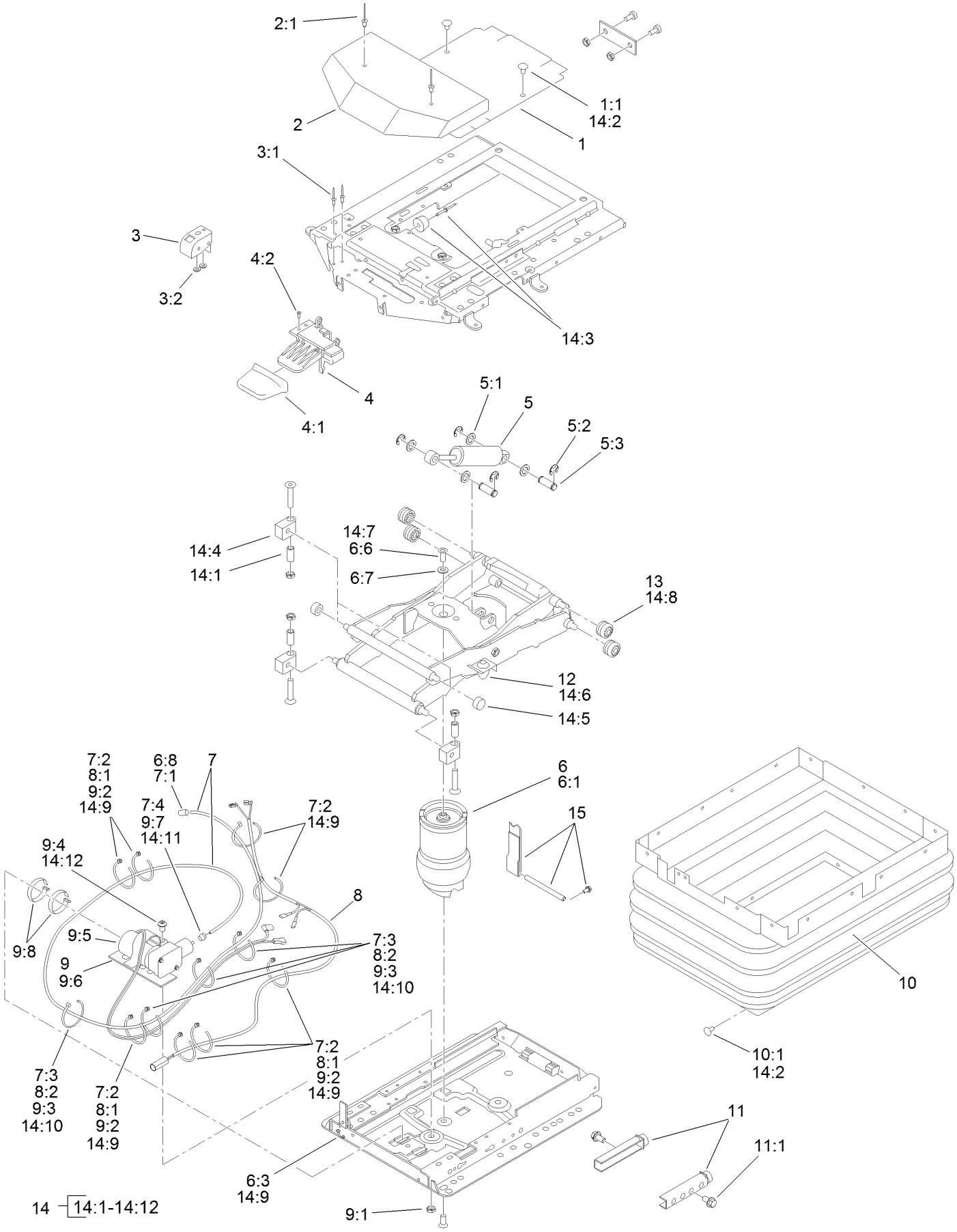

Air Ride Seat Suspension Assembly No. 108-1488 (continued)

Ref.	Part Number	Qty.	Description
1	108-8026	1	Cover ASM
1:1	39-5710	2	Plug-Plastic
2	108-8027	1	Cover
2:1		2	Rivet ■
3	108-8028	1	Level Indicator Kit
3:1		2	Rivet ■
3:2		2	Washer ■
4	108-8029	1	Valve-Control, Air
4:1		1	Handle ■
4:2		3	Screw ■
5	108-8030	1	Shock Absorber Kit
5:1		4	Washer ■
5:2		4	C-Clip ■
5:3		2	Pin ■
6	108-8031	1	Air Spring Kit
6:1		1	Air Spring ■
6:3		2	Cable Tie ■
6:6		2	Screw ■
6:7		1	Washer ■
6:8		1	Nipple-Hose ■
7	108-8032	1	Air Tube ASM
7:1		1	Nipple-Hose ■
7:2		7	Tie-Wire ■
7:3		4	Tie-Wire ■
7:4		1	Nipple-Hose ■
8	108-8033	1	Connecting Cable ASM
8:1		8	Tie-Wire ■
8:2		4	Tie-Wire ■
9	108-8034	1	Compressor Kit
9:1		1	Nut ■
9:2		5	Tie-Wire ■
9:3		4	Tie-Wire ■
9:4		1	Screw ■
9:5		1	Compressor ■
9:6		1	Plate-Mounting ■
9:7		1	Nipple-Hose ■
9:8		2	Clamp ■
10	108-8035	1	Bellows ASM
10:1	39-5710	23	Plug-Plastic
11	108-8036	1	Stop Kit
11:1		2	Screw ■
12	107-1213	2	Bumper Set
13	108-8037	4	Roller
14	108-8038	1	Wear Parts Kit ●
14:1		4	Spacer ■
14:2	39-5710	2	Plug-Plastic
14:3		1	Bumper ■
14:4		4	Support-Housing ■
14:5		2	Roller ■
14:6	107-1213	2	Bumper Set
14:7		2	Screw ■
14:8	108-8037	4	Roller
14:9		9	Tie-Wire ■
14:10		4	Tie-Wire ■
14:11		1	Nipple-Hose ■
14:12		1	Screw ■
15	119-2161	1	Tether Kit

● Not illustrated

■ Not serviced separately

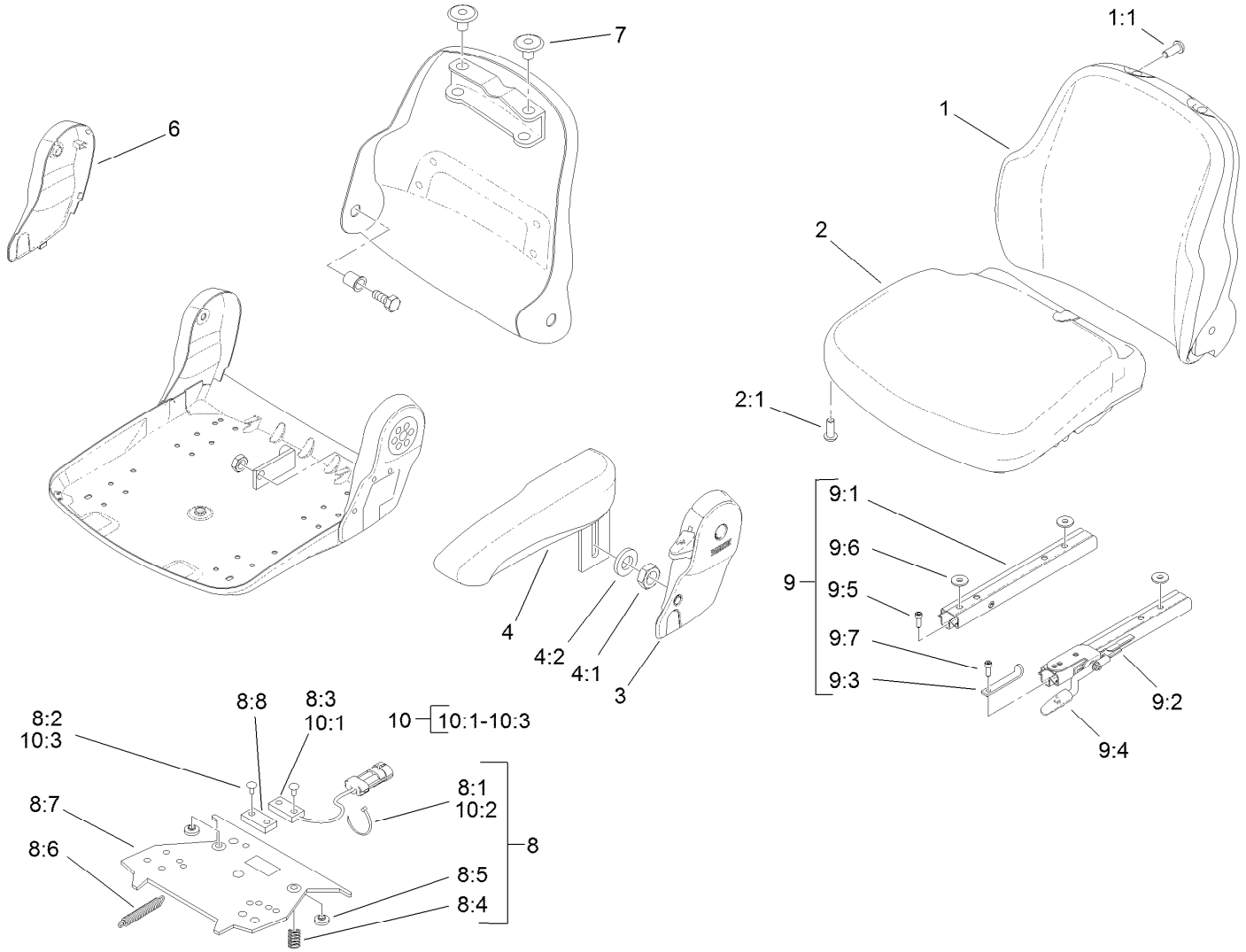

Vinyl Premium Seat Assembly No. 117-5676

Ref.	Part Number	Qty.	Description
1	108-8016	1	Backrest Cushion ASM
1:1	119-7742	4	Screw-Cushion
2	108-8017	1	Seat Cushion ASM
2:1	119-7742	3	Screw-Cushion
3	108-8018	1	Cover-Armrest
4	108-8019	1	LH Armrest ASM
4:1	82-9650	1	Nut
4:2	107-1198	1	Washer
6	108-8021	1	Cover-Armrest
7	108-8022	2	Cover-Black
8	108-8024	1	Switch Kit
8:1		3	Wire Tie ●
8:2		4	Rivet ●
8:3		1	Sensor-Seat Switch ●
8:4		2	Spring-Compression ●
8:5		2	Bumper-Pressure Plate ●

Ref.	Part Number	Qty.	Description
8:6		1	Spring-Extension ●
8:7		1	Plate-Mounting ●
8:8		1	Magnet ●
9	108-8025	1	Adjustment Rail Set
9:1		1	Rail-Adjustment, RH ●
9:2		1	Rail-Adjustment, LH ●
9:3		1	Stop-Rail ●
9:4		1	Handle ●
9:5		3	Screw ●
9:6		3	Washer ●
9:7		1	Screw ●
10	110-6189	1	Switch Kit
10:1		1	Switch ●
10:2		3	Wire Tie ●
10:3		2	Rivet ●

● Not serviced separately

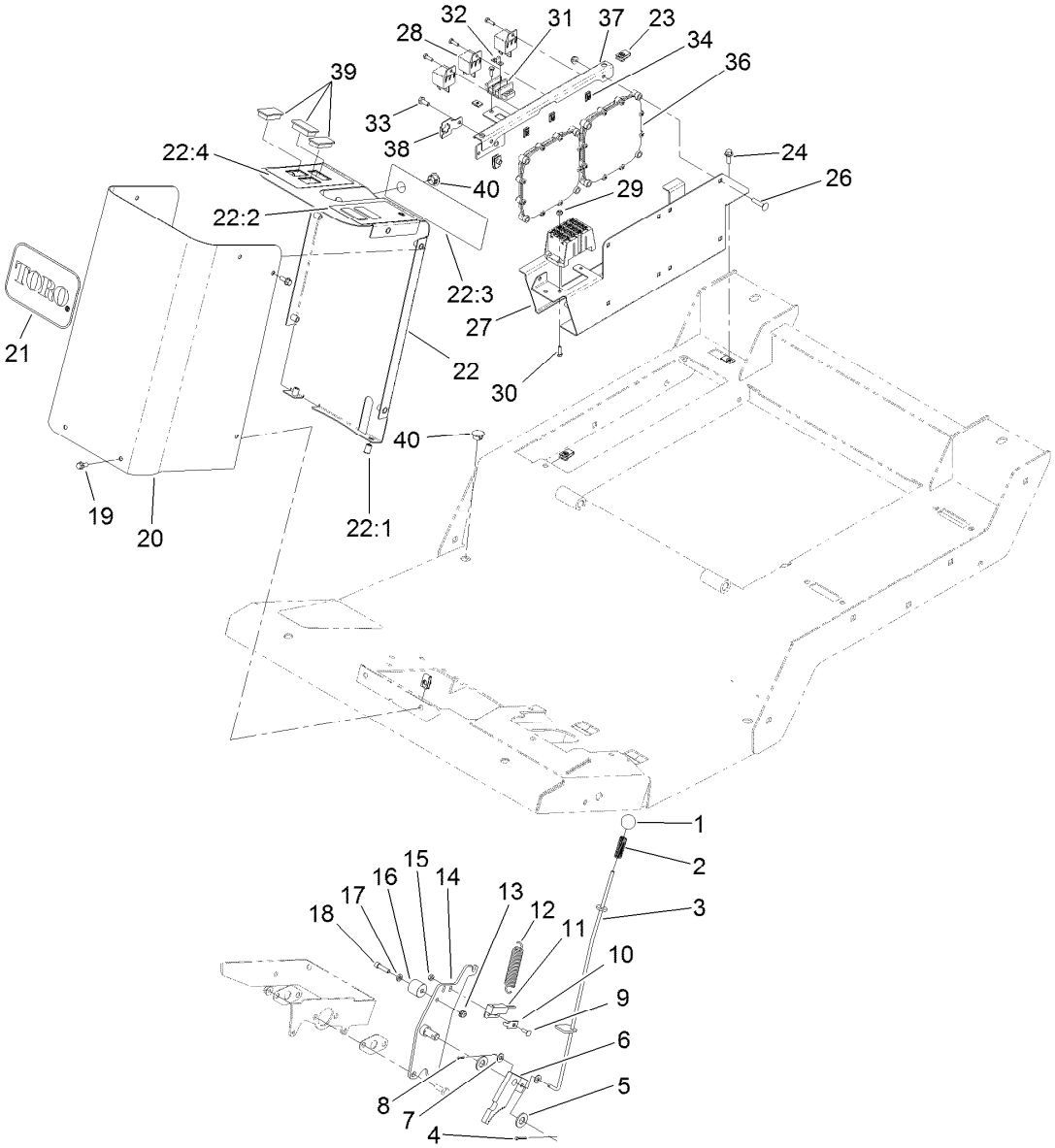

Parking Brake, Steering Tower and Power Center Assembly

Ref.	Part Number	Qty.	Description
1	233-17	1	Knob
2	71-8310	1	Spring-Compression
3	114-0195	1	Rod-Parking, Brake
4	3272-10	1	Pin-Cotter
5	3256-26	2	Washer-Flat
6	63-7900-03	1	Rack
7	3256-22	2	Washer-Flat
8	3272-5	1	Pin-Cotter
9	3229-34	1	Screw-CARR
10	100-4872	1	Plate-Switch, Neutral
11	100-1270	1	Switch-Proximity
12	13-0480	1	Spring
13	104-7201	9	Nut-HF
14	114-0190-03	1	Pivot-Parking, Brake
15	3296-2	3	Nut-Lock, NI
16	117-5499	1	Spacer-Deflector
17	55-9620	1	Spacer-Plate, Pivot
18	3274-9	1	Screw-HSH
19	3234-33	10	Screw-HHF
20	120-4136-01	1	Cover-Steering Tower, Front
21	62-5550	1	Decal

Ref.	Part Number	Qty.	Description
22	120-4165	1	Steering Tower ASM
22:1	32148-6	8	Insert-Nut
22:2	120-4130	1	Decal-Steering Tower, LH
22:3	114-0845	1	Decal-Column, Steering
22:4	120-4129	1	Decal-Steering Tower, RH
23	107069	7	Clip
24	3234-4	2	Screw-HHF
26	3229-3	8	Screw-CARR
27	120-4093-03	1	Mount-Power
28	99-7435	3	Relay-Power
29	3296-12	2	Nut-Lock, NI
30	3290-134	7	Screw
31	42862	1	Block-Terminal, Ground
32	42863	1	Strip-Jumper
33	321-3	1	Screw-HH
34	107-1013	5	Nut-Speed, U-Type
36	114-3321	2	Controller-Tec
37	120-4127-03	1	Mount-Relay
38	114-5502	1	Clip-Fuse
39	99-7420	5	Plug-Hole
40	94-5627	1	Plug

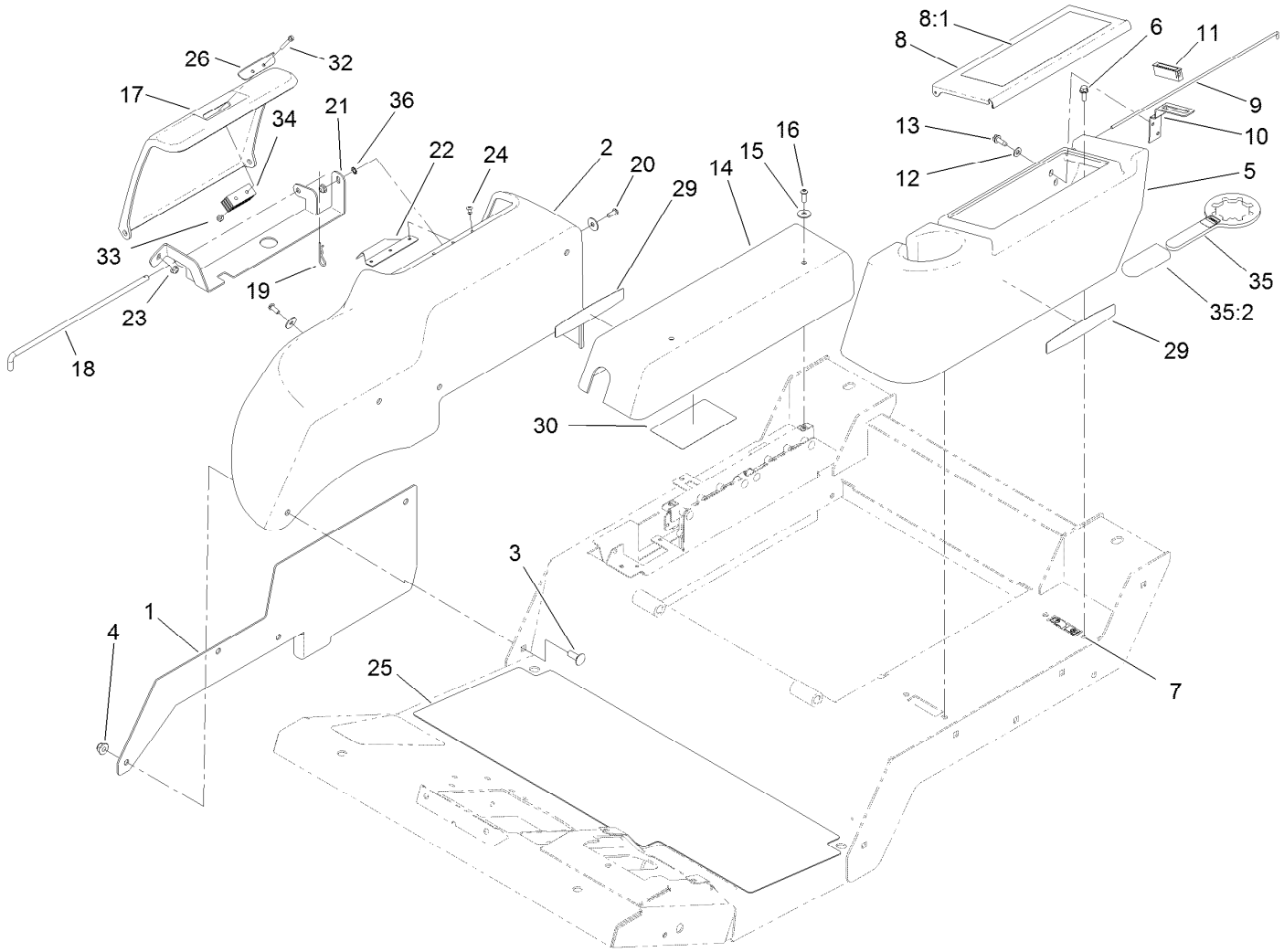

Fender, Tool Box and Cover Assembly

Ref.	Part Number	Qty.	Description
1	121-1579-03	1	Plate-Fender, RH
2	120-4113	1	Fender-RH
3	3231-22	4	Screw-CARR
4	104-8301	4	Nut-HF, NI
5	120-4125	1	Housing-Tool Box
6	3234-4	4	Screw-HHF
7	107069	4	Clip
8	120-4124	1	Tool Box Cover ASM
8:1	117-2754	1	Decal-Warning
8:1	117-2766	1	Decal-Warning, CE
9	120-4122	1	Rod-Hinge
10	104-7545	1	Bracket-Latch
11	58-4250	1	Catch-Magnetic
12	3256-22	2	Washer-Flat
13	32104-95	2	Screw-HWH
14	120-4126	1	Cover-Controllers
15	87-6630	4	Washer-Plain
16	3274-69	2	Screw-HSBH

Ref.	Part Number	Qty.	Description
17	120-4115	1	Cover-Battery
18	121-1588	1	Rod-Hinge
19	3290-467	1	Pin-Hair
20	3274-31	2	Screw-HSBH
21	121-1586-03	1	Mount-Cover
22	127-3706	1	Plate-Cover
23	104-7201	2	Nut-HF
24	3269-23	3	Rivet-Pop
25	120-4128	1	Tread-Foot, Abrasive
26	127-3705	1	Plate-Cover
29	121-1594	2	Decal-Smart Power
30	121-1599	1	Decal-Fuses
32	32105-1	2	Screw-SHH
33	3296-2	2	Nut-Lock, NI
34	69-6260	1	Magnet
35	121-3874	1	Wrench ASM
35:2	119-1846	1	Grip
36	3255-7	1	Washer-Lock/EXT

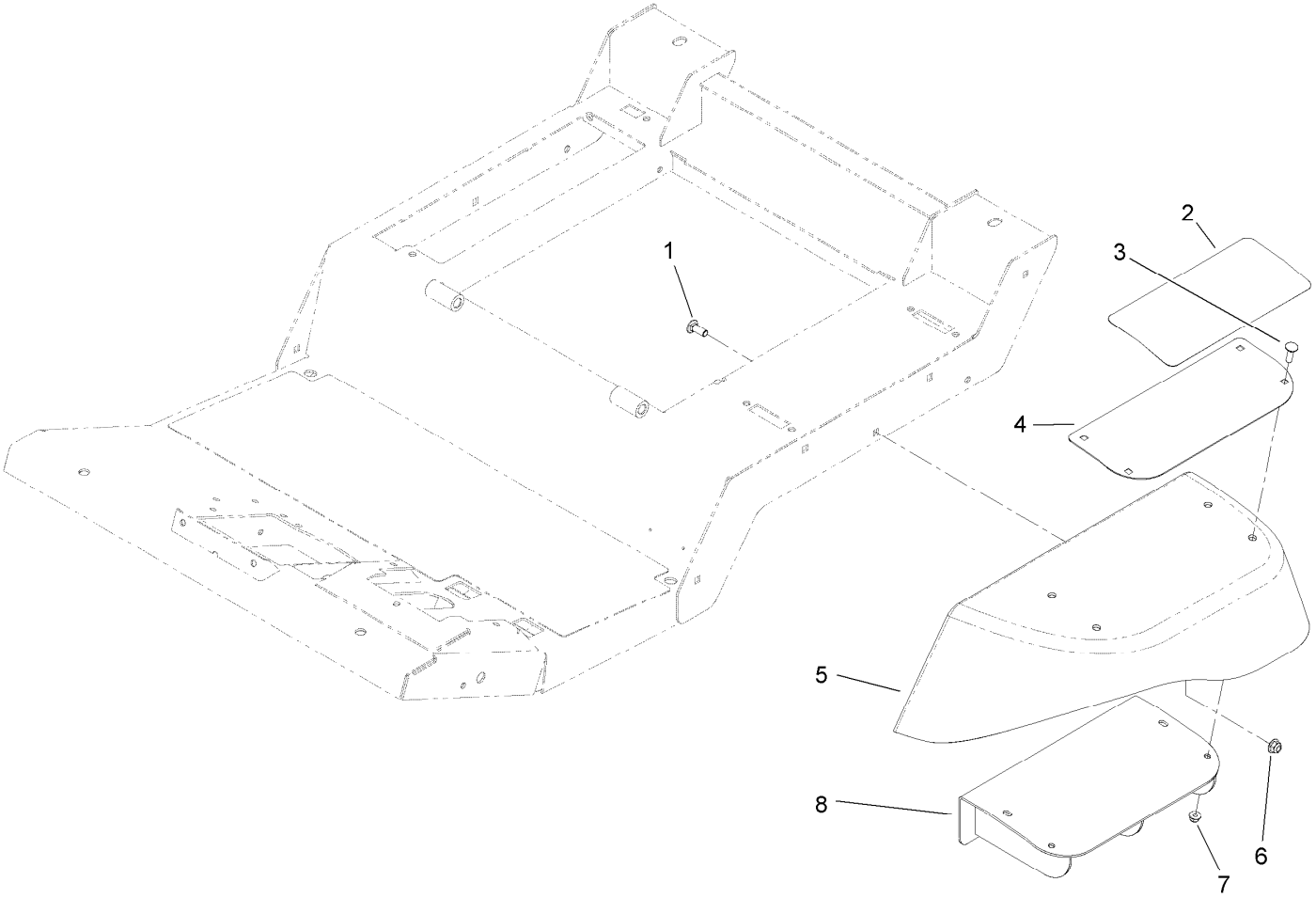

Fender and Step Support Assembly

Ref.	Part Number	Qty.	Description
1	3231-22	4	Screw-CARR
2	120-4116	1	Pad-Step, Abrasive
3	3230-28	4	Screw-CARR
4	120-4117-03	1	Plate-Step
5	121-1585	1	Fender-LH
6	104-8301	4	Nut-HF, NI
7	104-8300	4	Nut-HF, NI
8	120-8900-03	1	Support-Step

Front Deck Lift-Arm Assembly

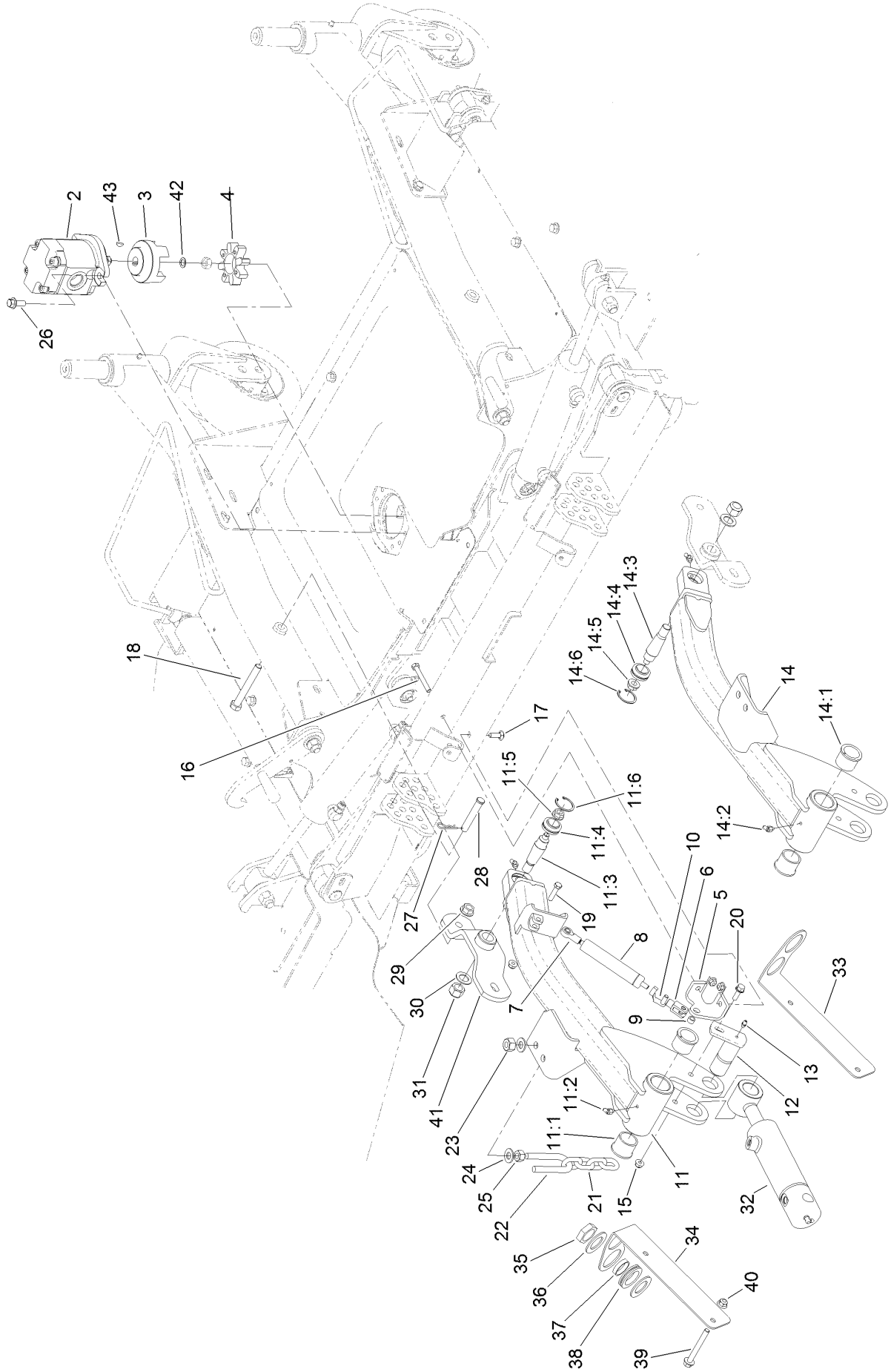

Front Deck Lift-Arm Assembly (continued)

Ref.	Part Number	Qty.	Description
2	127-3694	3	HYD Motor ASM
3	104-3541	3	Hub-Spider
4	104-3542	3	Spider
5	120-9015-01	1	Support-Damper
6	115-5455	1	End-Rod, Clevis
7	104-8331	1	End-Rod, Spherical
8	105-3249	1	Damper
9	115-2142	1	Spacer
10	115-5454	1	Pin-Spring
11	120-9013	1	LH Lift Arm ASM
11:1	104-0015	2	Bushing-Flange
11:2	302-11	2	Fitting-Lube, 45 DEG
11:3	105-7468	1	Stud-Tapered
11:4	105-7441	1	Bearing-Spherical
11:5	32128-42	1	Nut-HF
11:6	32151-34	1	Ring-Retaining
12	125-1912	2	Pin-Pivot
13	302-5	2	Fitting-Grease
14	120-9012	1	RH Lift Arm ASM
14:1	104-0015	2	Bushing-Flange
14:2	302-11	2	Fitting-Lube, 45 DEG
14:3	105-7468	1	Stud-Tapered
14:4	105-7441	1	Bearing-Spherical
14:5	32128-42	1	Nut-HF
14:6	32151-34	1	Ring-Retaining
15	104-8300	5	Nut-HF, NI
16	322-12	1	Screw-HH

Ref.	Part Number	Qty.	Description
17	3230-22	1	Screw-CARR
18	325-17	4	Screw-HH
19	322-17	1	Screw-HH
20	3234-29	2	Screw-HHF
21	95-6231	2	Chain-HOC
22	104-0108	2	U-Bolt
23	3296-25	4	Nut-Lock, NI
24	3256-26	8	Washer-Flat
25	3217-9	4	Nut-HH
26	3234-42	6	Screw-HHF
27	3290-467	2	Pin-Hair
28	283-55	2	Pin-Clevis
29	32128-23	4	Nut-HF
30	86-1440	2	Washer-Flat
31	3296-41	2	Nut-Lock NI
32	120-8822	2	HYD Cylinder ASM
33	121-1499-03	1	Plate-Mount, Bulkhead, RH
34	121-1494-03	1	Plate-Mount, Bulkhead, LH
35	340-126	4	Nut-Bulkhead
36	69-8910	8	Washer
37	69-8900	4	Spacer
38	240-7	4	Grommet-Rubber
39	3234-41	4	Screw-HHF
40	104-8301	4	Nut-HF, NI
41	115-5442-01	2	Support-Hub
42	112-6957	3	Washer-Hardened
43	3257-3	3	Key-Woodruff

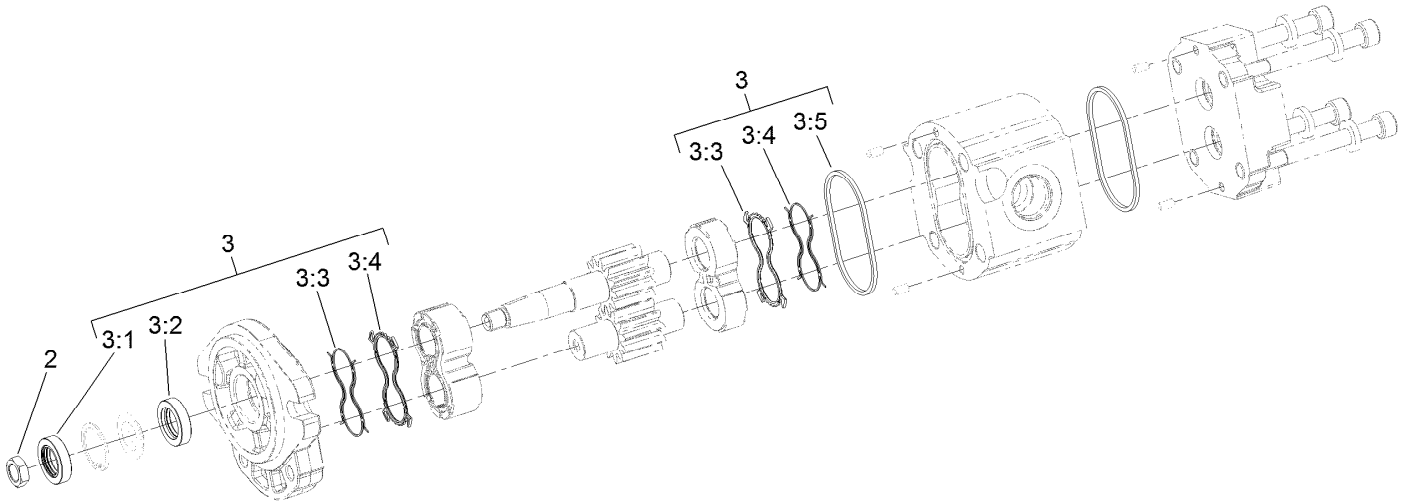

Hydraulic Motor Assembly No. 127-3694

Ref.	*Part Number*	*Qty.*	*Description*
2	110-8815	1	Nut-Hex
3	114-5620	1	Seal Kit
3:1		1	Seal-Shaft ●
3:2		1	Seal-Shaft ●
3:3		2	Seal-Anti Extrusion ●
3:4		2	Seal-Plate, Balancing ●
3:5		2	O Ring-Housing ●

● Not serviced separately

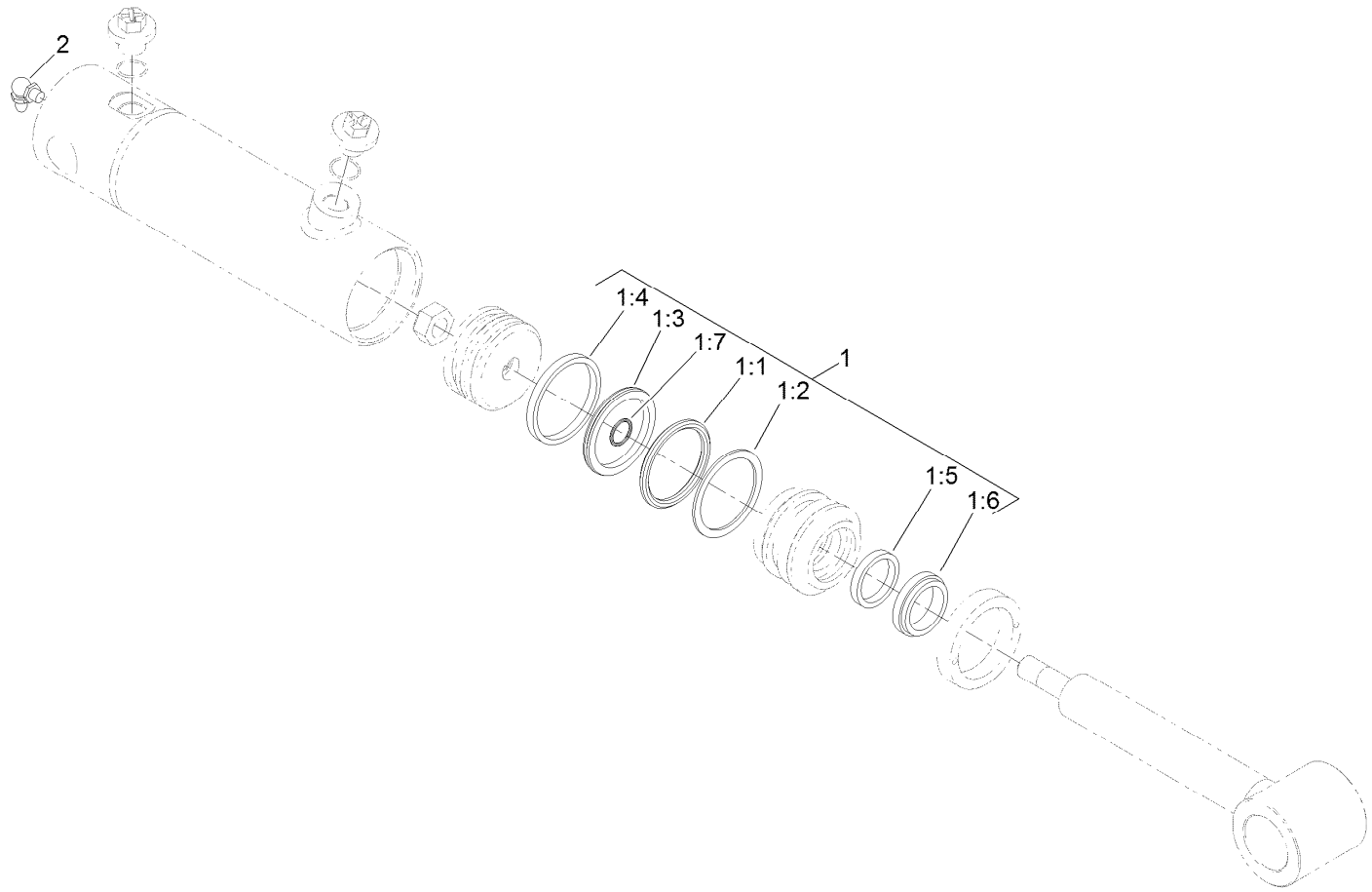

Hydraulic Cylinder Assembly No. 120-8822

Ref.	*Part Number*	*Qty.*	*Description*
1	125-4300	1	Seal Kit
1:1		1	O-Ring ●
1:2		1	Backup ●
1:3		1	Bp Seal ●
1:4		1	Wear Ring ●
1:5		1	Bt Seal ●
1:6		1	Dust Seal ●
1:7		1	O-Ring ●
2	302-60	1	Fitting-Grease

● Not serviced separately

Front Deck Hose Routing Assembly

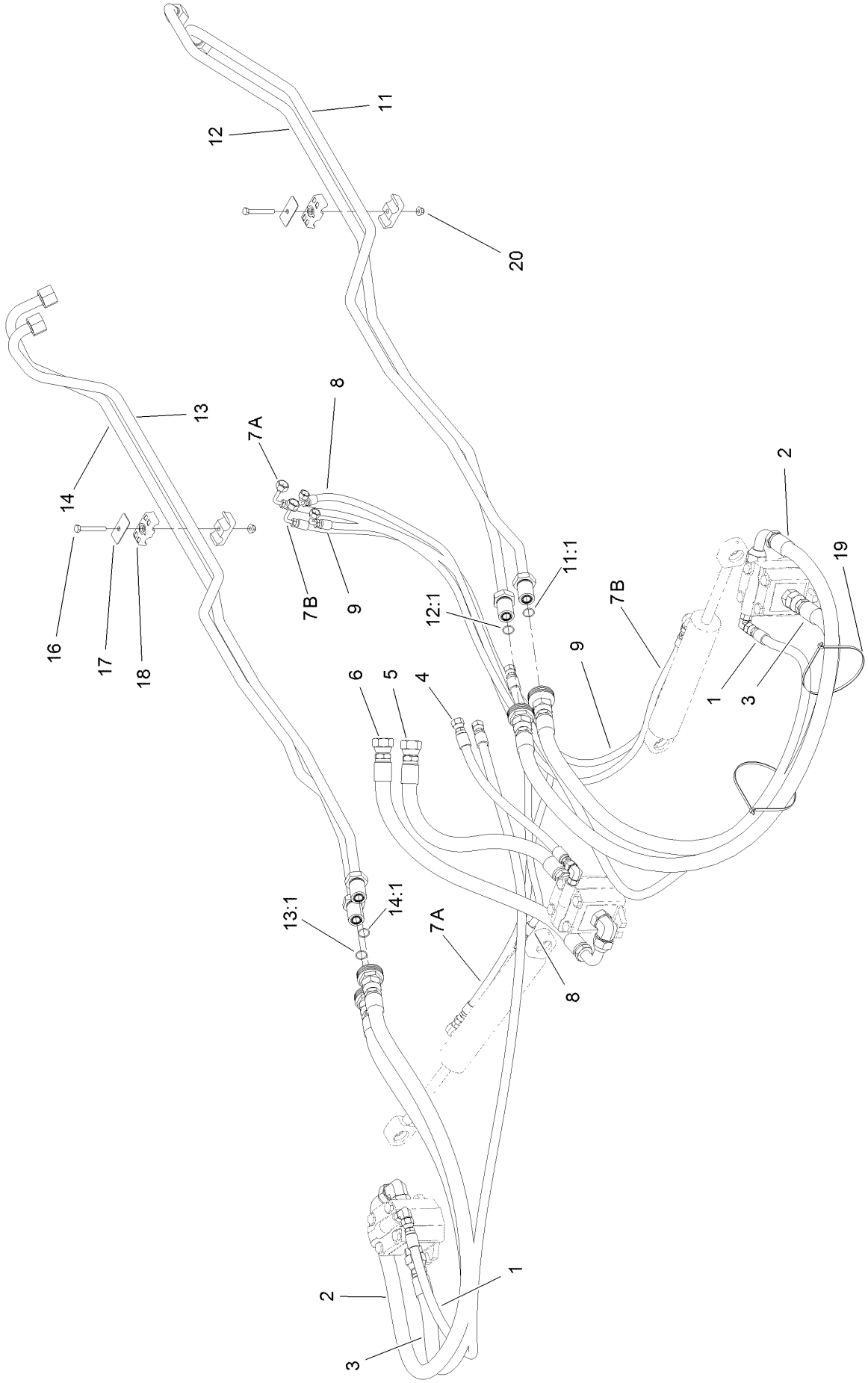

Front Deck Hose Routing Assembly (continued)

Ref.	Part Number	Qty.	Description
1	95-8843	2	Hose-HYD
2	120-8987	2	Hose-HYD
3	121-1457	2	Hose-HYD
4	76-6550	1	Hose-HYD
5	121-1540	1	Hose-HYD
6	121-1541	1	Hose-HYD
7	120-9054	2	Hose-HYD
8	106-3691	1	Hose-HYD
9	85-4940	1	Hose-HYD
11	121-1495	1	Tube-HYD
11:1	237-58	1	O-Ring

Ref.	Part Number	Qty.	Description
12	121-1496	1	Tube-HYD
12:1	237-58	1	O-Ring
13	121-1497	1	Tube-HYD
13:1	237-58	1	O-Ring
14	121-1498	1	Tube-HYD
14:1	237-58	1	O-Ring
16	322-12	2	Screw-HH
17	69-9761	2	Plate-Cover
18	94-8105	4	Clamp-Tube
19	3290-379	8	Tie-Cable
20	104-8300	2	Nut-HF, NI

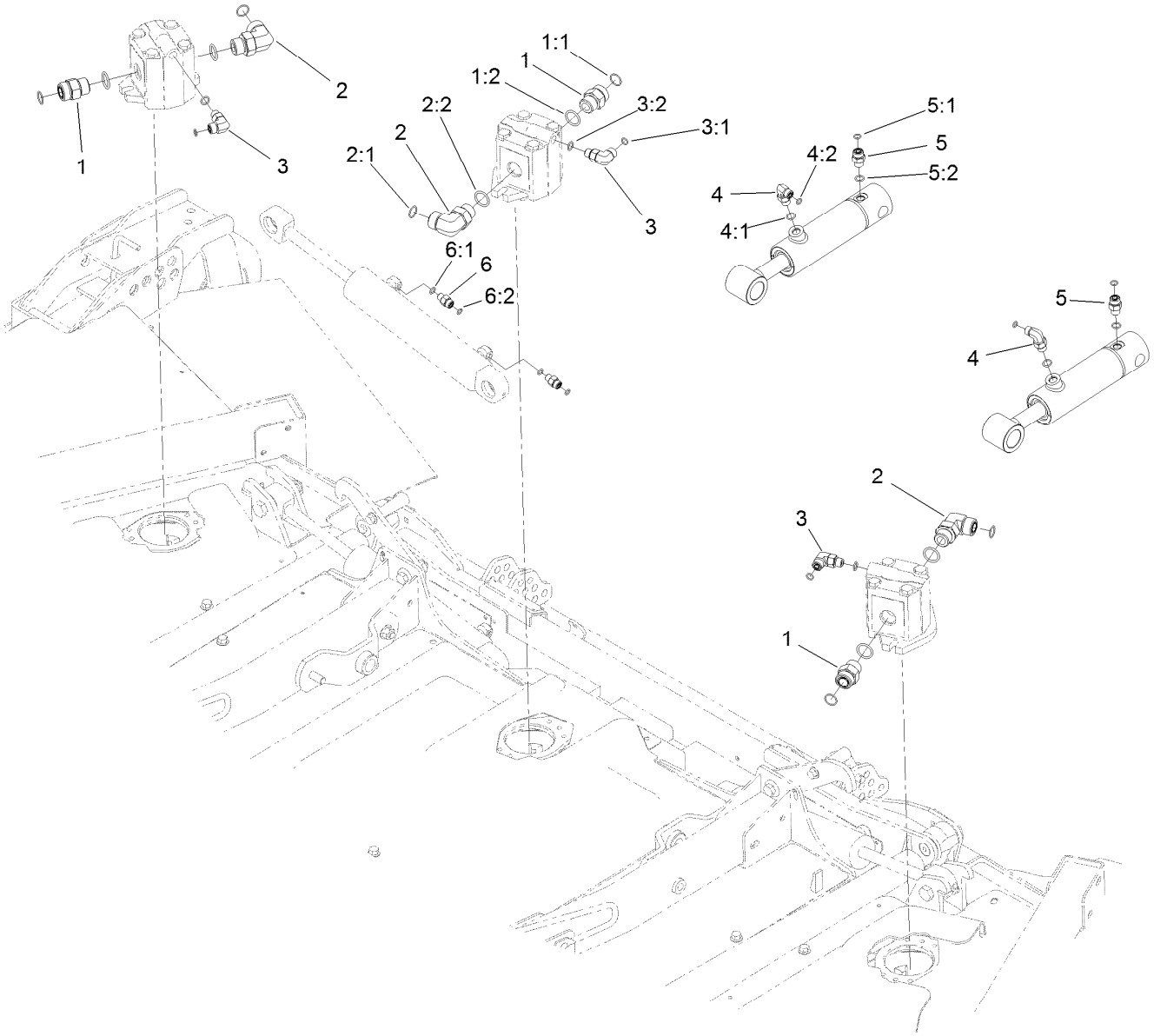

Front Deck Hydraulic Fitting Assembly

Ref.	Part Number	Qty.	Description
1	340-9	3	Fitting-STR
1:1	237-58	1	O-Ring
1:2	237-81	1	O-Ring
2	340-142	3	Fitting-Elbow-90
2:1	237-58	1	O-Ring
2:2	237-81	1	O-Ring
3	340-77	3	Fitting-Elbow, 90 DEG
3:1	237-22	1	O-Ring
3:2	237-42	1	O-Ring

Ref.	Part Number	Qty.	Description
4	340-82	2	Fitting-Elbow, 90
4:1	237-42	1	O-Ring
4:2	237-21	1	O-Ring
5	340-2	2	Fitting-Straight
5:1	237-22	1	O-Ring
5:2	237-42	1	O-Ring
6	340-92	4	Fitting-Straight
6:1	237-78	1	O-Ring
6:2	237-21	1	O-Ring

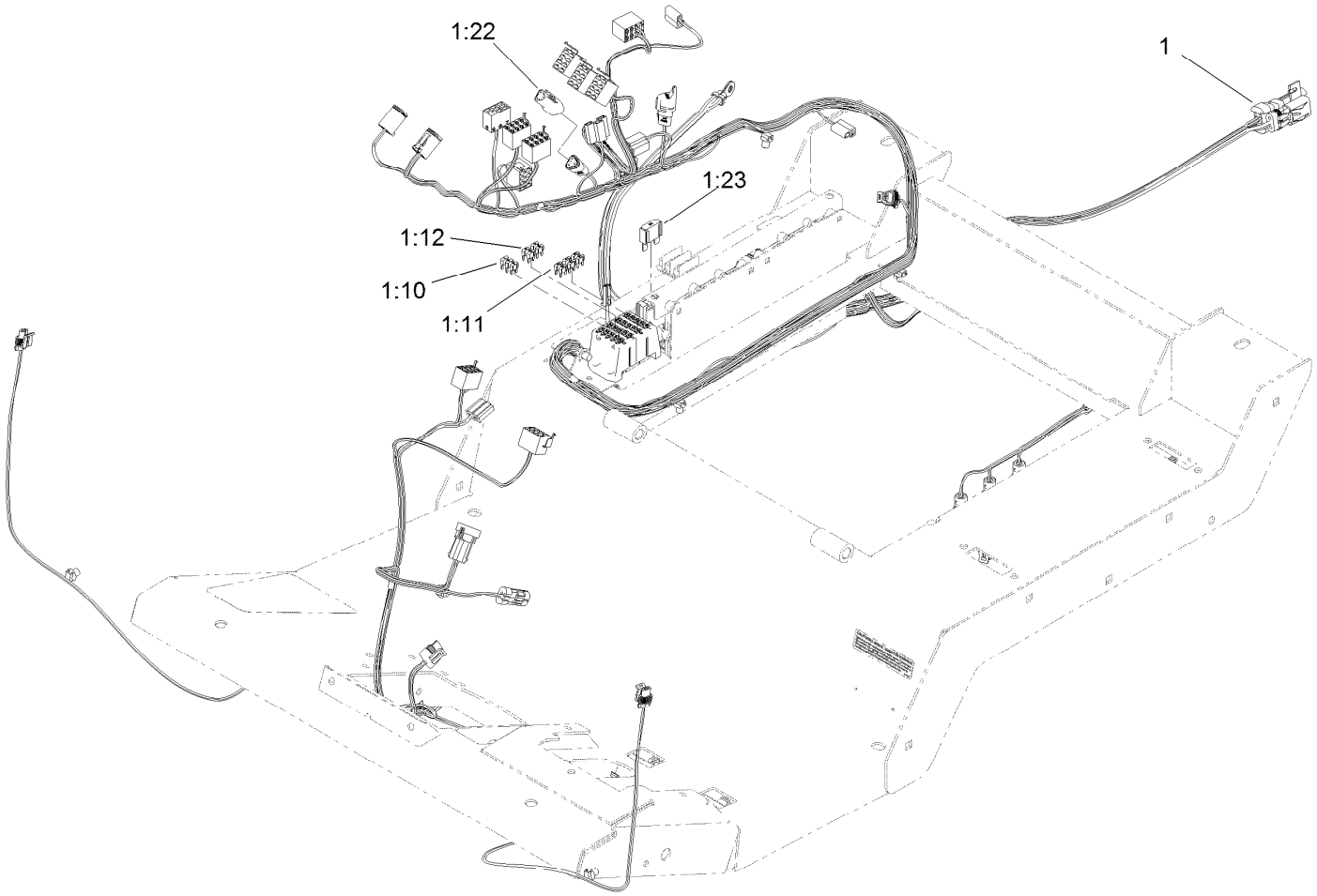

Platform Harness and Fuse Assembly

Ref.	*Part Number*	*Qty.*	*Description*
1	122-0227	1	Harness-Wire, Platform
1:10	121-8861	3	Fuse-Mini Blade, 2 Amp
1:11	121-8865	6	Fuse-Mini Blade, 7.5 Amp
1:12	121-8866	4	Fuse-Mini Blade, 10 Amp
1:22	32180-043	1	Resistor-120 Ohm
1:23	114-3342	1	Fuse-Maxi, 60 Amp

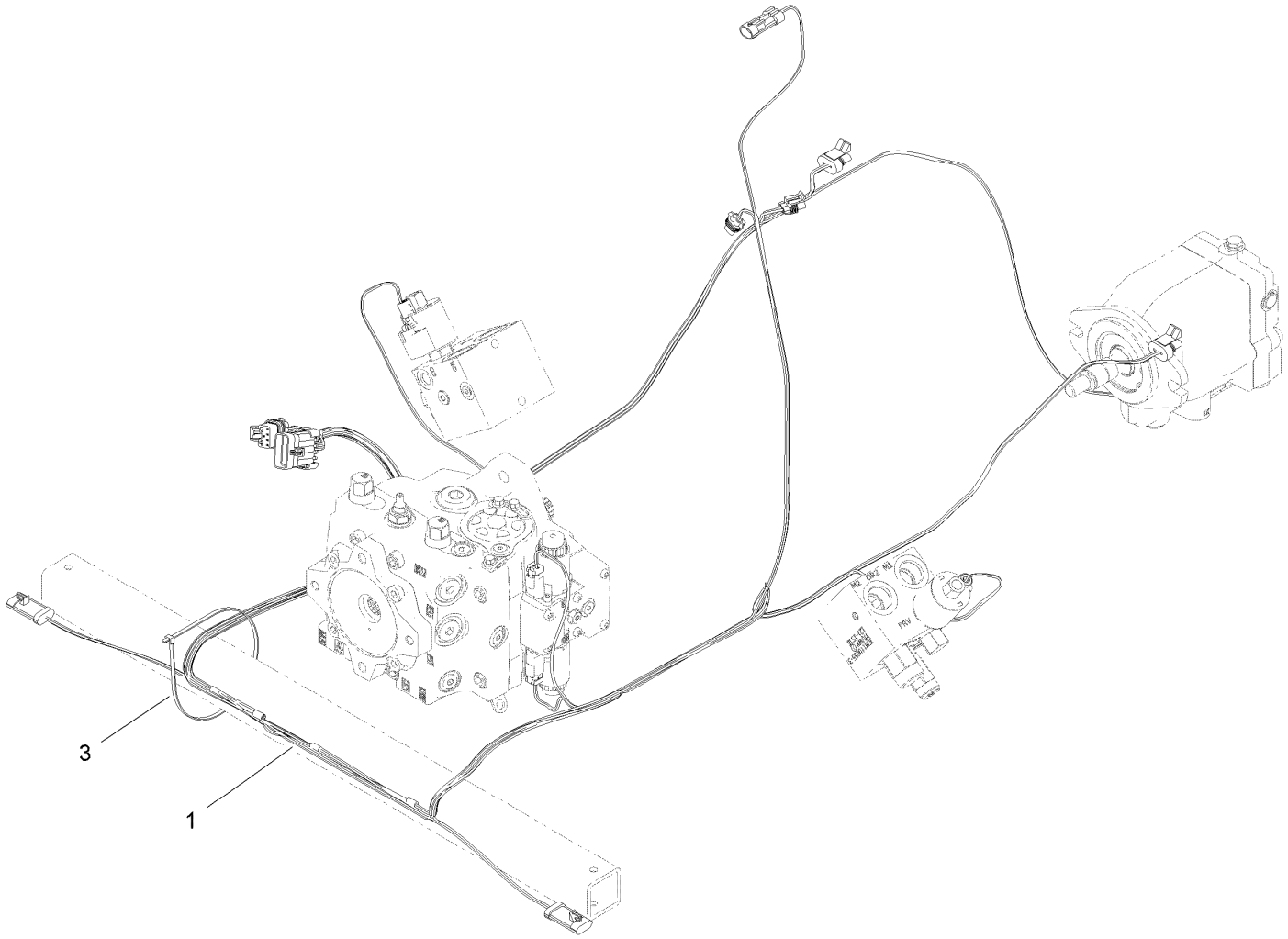

Rear Wire Harness Assembly

Ref.	Part Number	Qty.	Description
1	122-0228	1	Harness-Wire, Rear
3	3290-379	1	Tie-Cable

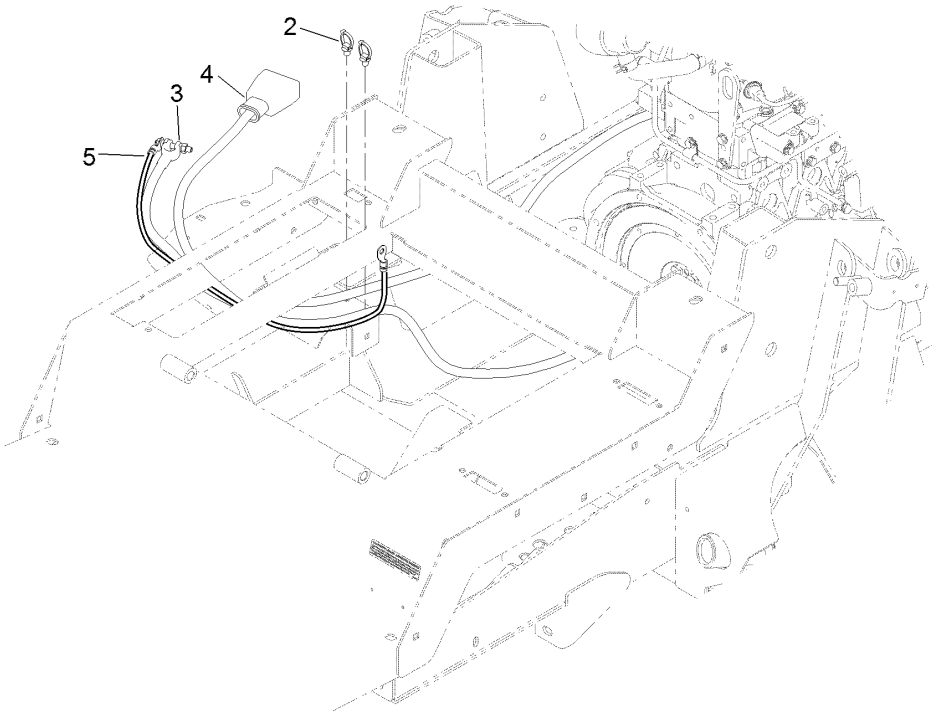

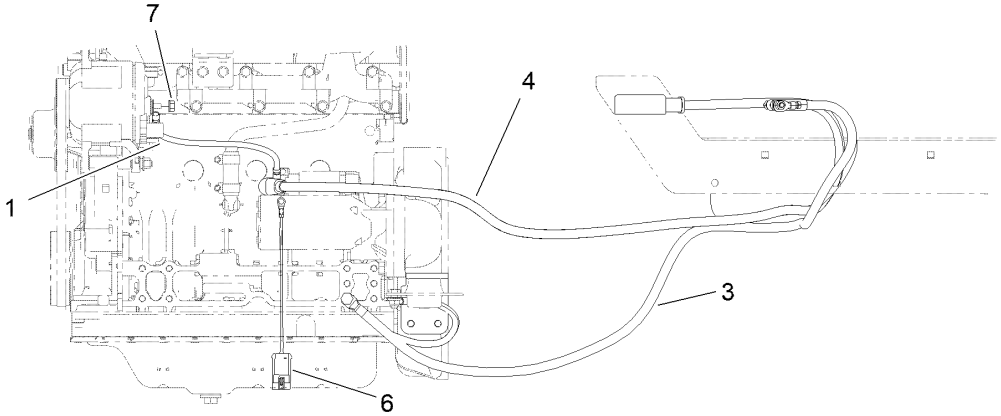

Battery Cable and Grounds Assembly

Ref.	*Part Number*	*Qty.*	*Description*
1	122-0071	1	Cable-Battery, Positive
2	32180-030	2	Clip-Tie
3	121-8898	1	Cable-Battery, Negative
4	121-8897	1	Cable-Battery, Positive
5	54-3094	1	Cable
6	108-9470	1	Harness-Wire, Fusible Link
7	33004-00	2	Nut-HF

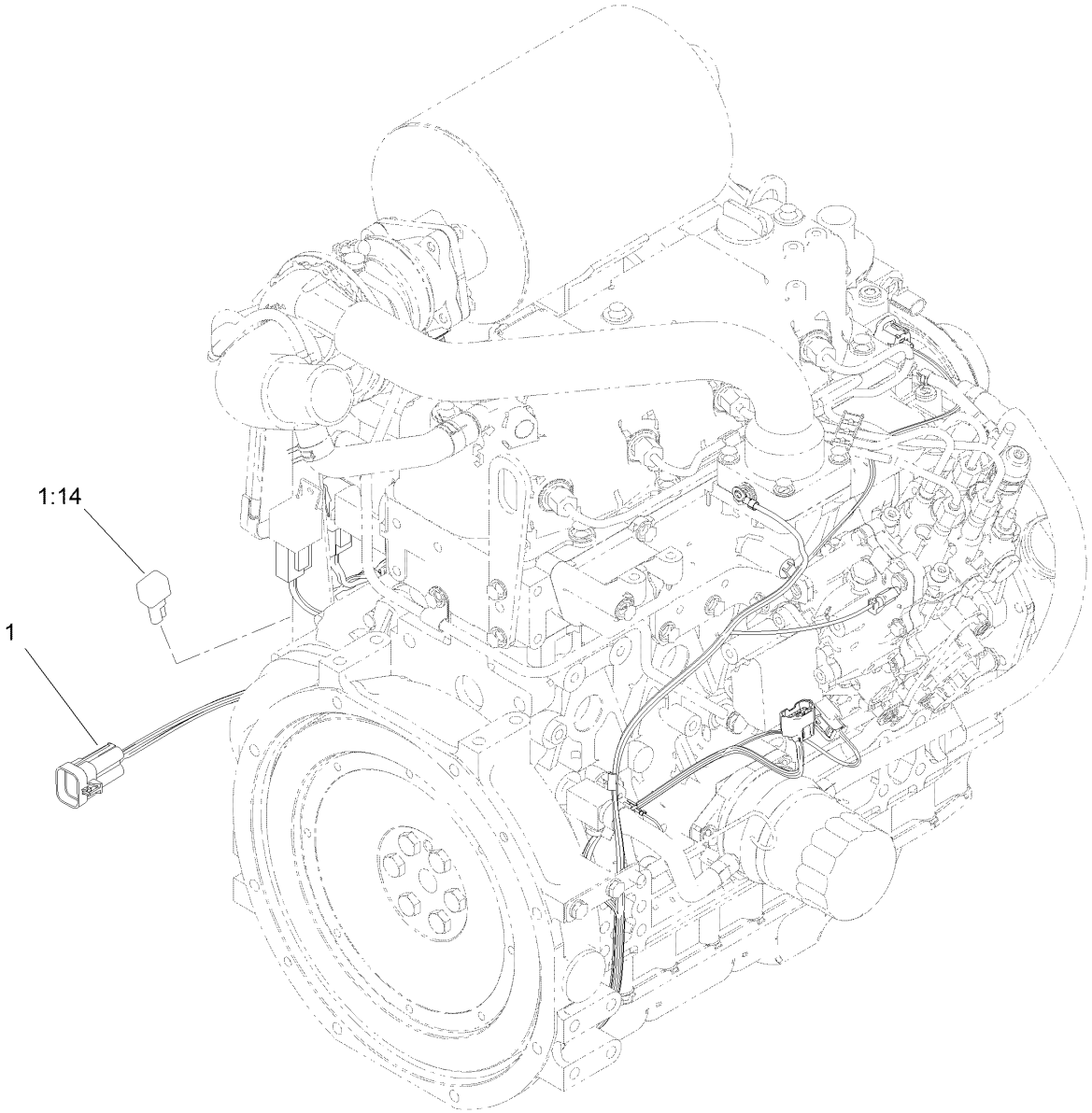

Engine Harness Assembly

Ref.	*Part Number*	*Qty.*	*Description*
1	119-4351	1	Harness-Wire, Engine
1:14	100-4918	1	Diode

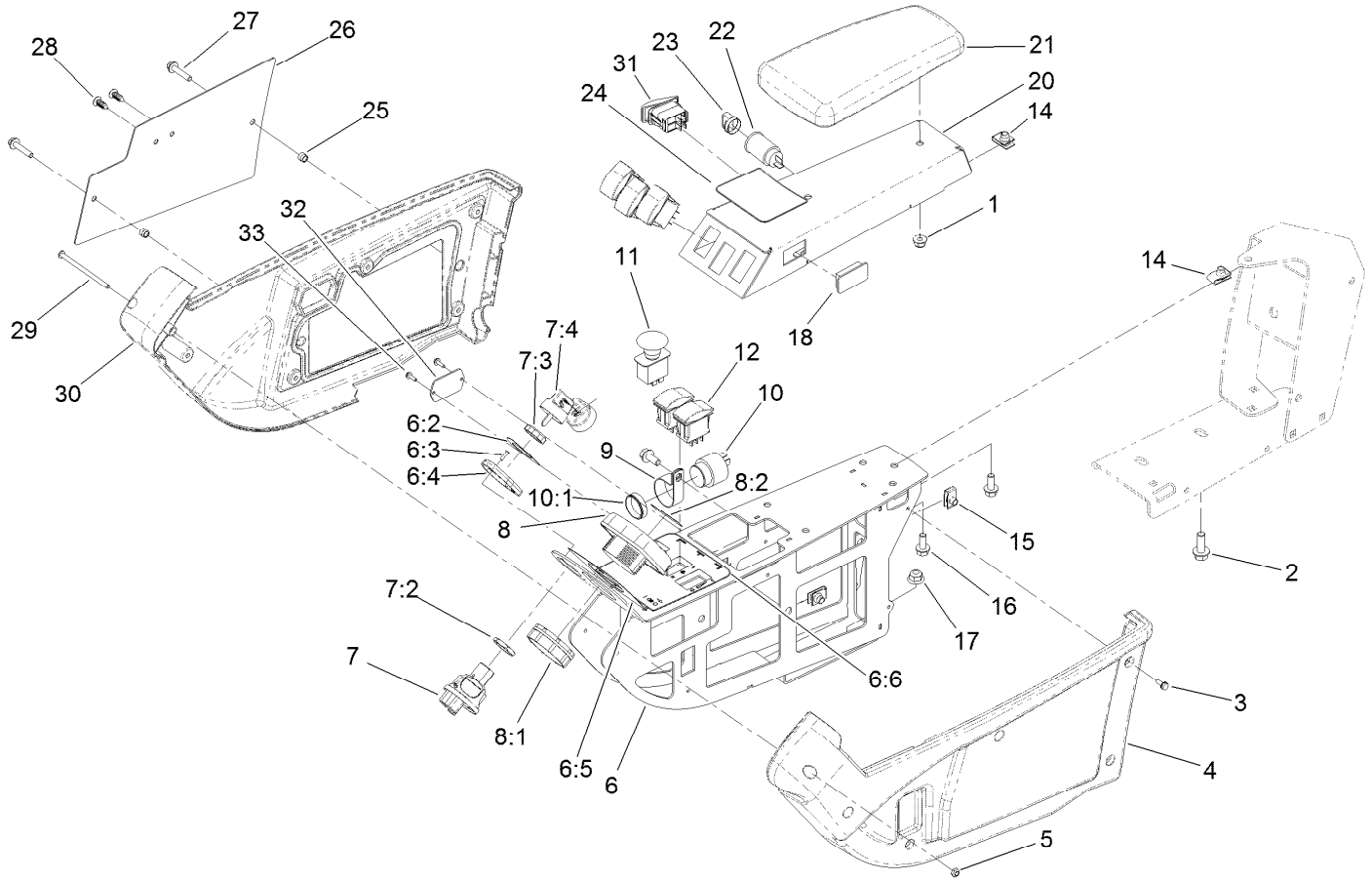

Arm-Rest Control Panel Assembly

Ref.	Part Number	Qty.	Description
1	104-8300	2	Nut-HF, NI
2	3234-42	2	Screw-HHF
3	32144-112	10	Screw-HWH
4	108-7604	1	Cover-LH
5	3296-12	1	Nut-Lock, NI
6	120-4155	1	Panel ASM
6:2	121-3884	1	Decal-Console, Upper
6:3	3269-17	2	Rivet-Pop
6:4	121-3889	1	Step-Elevated, Switch
6:5	121-3887	1	Decal-Console, Display
6:6	120-4159	1	Decal-Console, Lower
7	121-5159	1	Ignition Switch ASM
7:2	121-5160	1	Nut-Hex
7:3	121-5161	1	Nut-Face
7:4	121-5162	1	Ignition Key Set
8	120-6310	1	LCD Display ASM
8:1	120-4630	1	Nut-Display
8:2	120-6311	1	Decal-Display
9	2412-74	1	R-Clamp
10	80-9330	1	Audio Alarm ASM
10:1	104-5107	1	Nut-Plastic, Knurled

Ref.	Part Number	Qty.	Description
11	93-9999	1	Switch-PTO, On-On-None
12	100-1535	5	Switch, (On)-Off-(On)
14	94-2413	6	Nut-U
15	107069	2	Clip
16	3234-5	6	Screw-HHF
17	104-8301	2	Nut-HF, NI
18	99-7420	1	Plug-Hole
20	125-4646-03	1	Panel-Control
21	108-7602	1	Rest-Arm
22	99-7411	1	Point-Power
23	99-7416	1	Cap
24	127-3700	1	Decal-Lift
25	110-0542	2	Spacer-Flange
26	115-8849-03	1	Plate-Cover
27	3234-21	2	Screw-HHF
28	114-4899	2	Plug-Plastic
29	3250-22	1	Screw-PPH
30	108-7605	1	Cover-RH
31	114-3329	1	Switch-Rocker
32	121-1630	1	Plate-Cover
33	32144-18	2	Screw-HWH

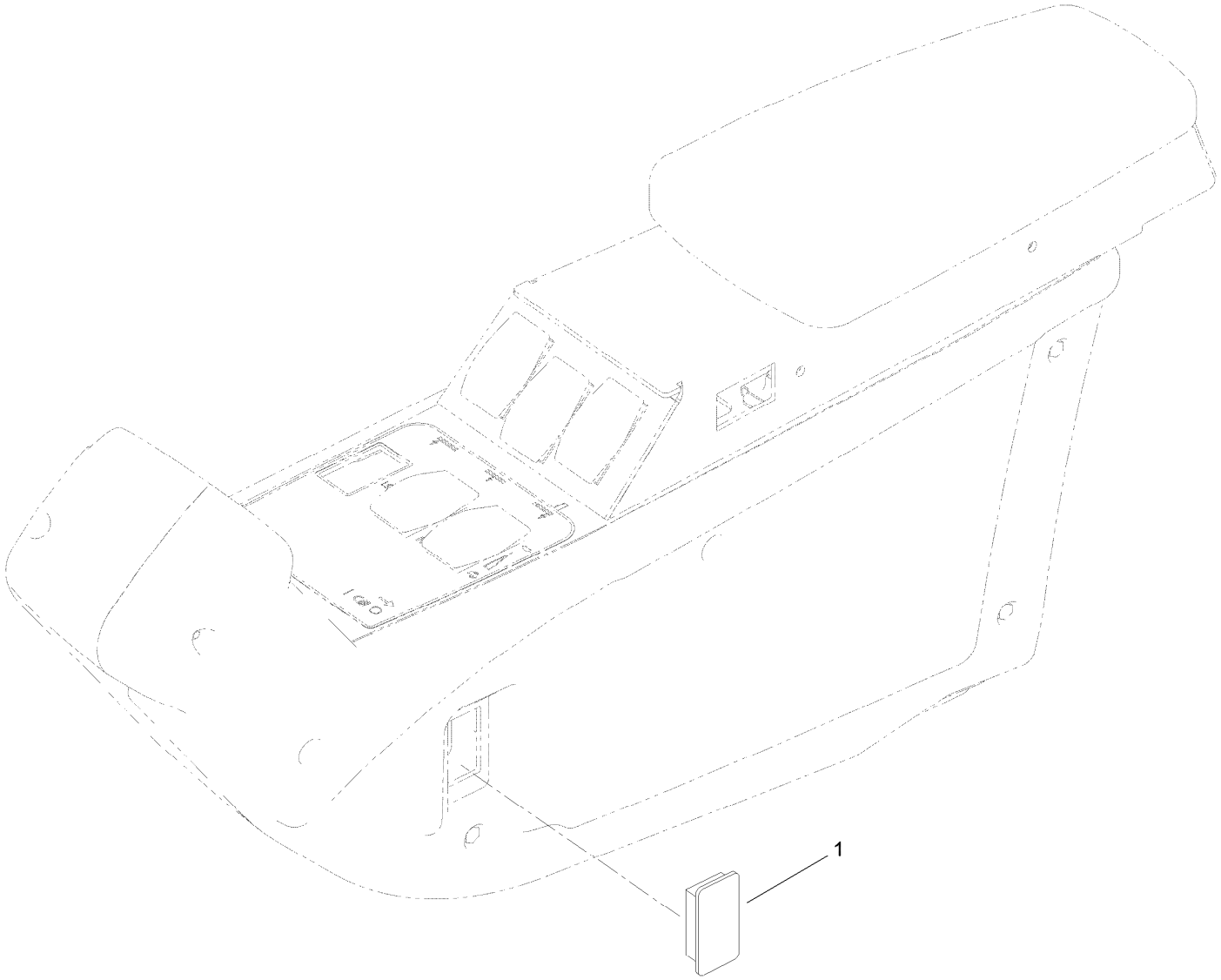

Arm-Rest Plug Assembly

Ref.	*Part Number*	*Qty.*	*Description*
1	99-7420	1	Plug-Hole

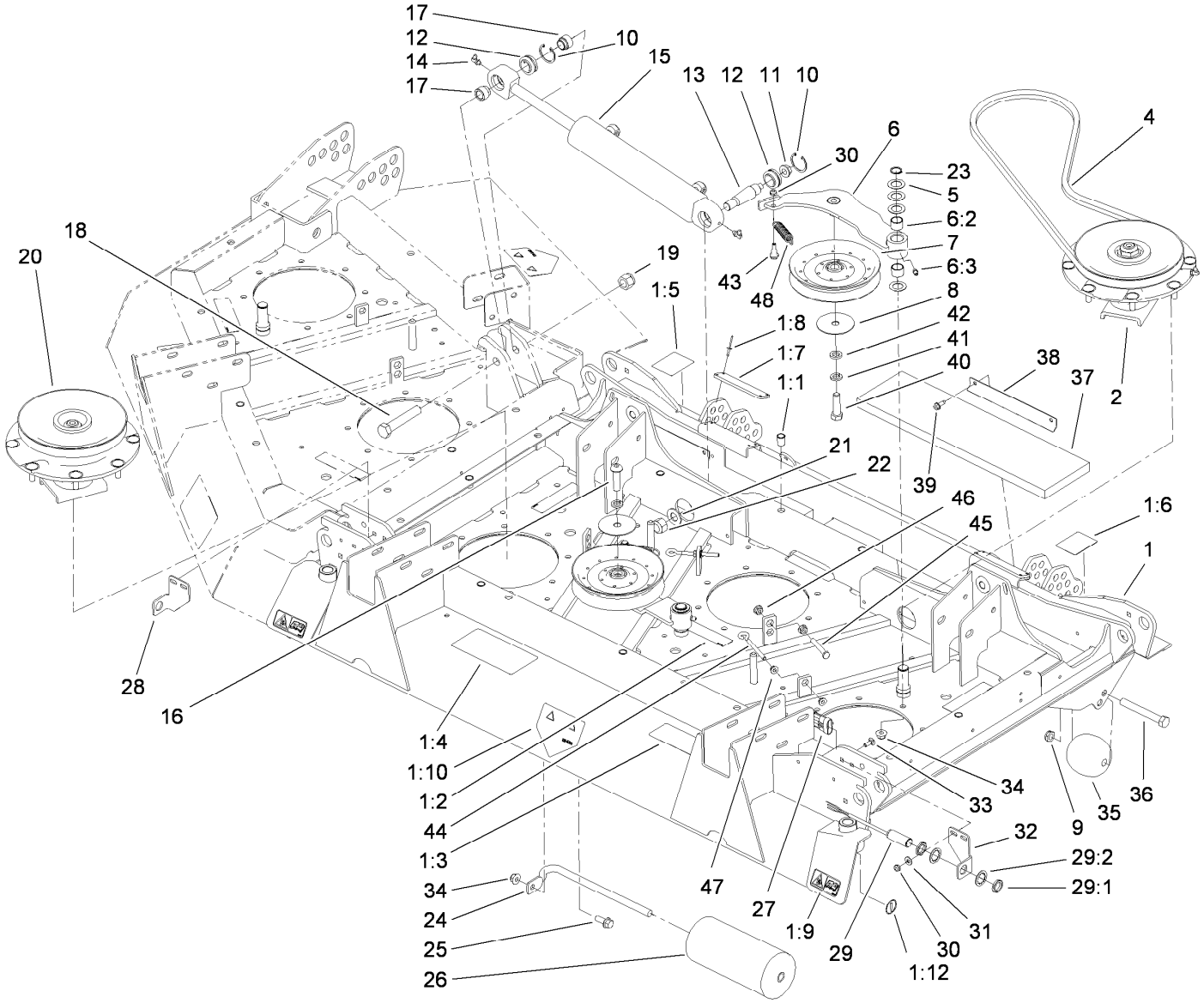

Center Deck Assembly

Ref.	Part Number	Qty.	Description
1	110-3297	1	Center Deck ASM
1:1	32148-9	9	Insert-Nut
1:2	100-6578	3	Decal-Danger
1:3	93-7818	1	Decal-Torque, Blade Bolt
1:4	100-5622	1	Decal-HOC
1:5	106-4250	1	Decal-HOC, RH
1:6	106-4251	1	Decal-HOC, LH
1:7	105-0786	2	Pad-Plastic
1:8	3269-8	8	Rivet-Blind
1:9	93-6674	2	Decal-Warning
1:10	120-6604	1	Decal-Danger
1:12	58-6520	2	Decal-Grease
2	119-4776	3	Low-Driven Spindle ASM
4	108-8077	4	V-Belt, Deck
5	3-6498	16	Washer-Thrust
6	110-6128	4	Idler Arm ASM
6:2	256-76	2	Bushing
6:3	302-5	1	Fitting-Grease
7	110-9596	4	Pulley-Idler
8	100-3102	4	Washer-Flat
9	3296-45	2	Nut-Lock, NI

Ref.	Part Number	Qty.	Description
10	32151-34	4	Ring-Retaining
11	32128-42	2	Nut-HF
12	105-7441	4	Bearing-Spherical
13	105-7468	2	Stud-Tapered
14	302-60	4	Fitting-Grease
15	107-0190	2	HYD Cylinder ASM
16	108-1993	1	Screw-HSBH
17	105-7443	4	Spacer-Pilot
18	327-14	2	Screw-HH
19	3296-53	2	Nut-Lock, NI
20	119-4549	1	High-Driven Spindle ASM
21	3256-27	2	Washer-Flat
22	3296-41	2	Nut-Lock NI
23	32120-72	4	Ring-Snap
24	68-6840	1	Shaft-Roller
25	3234-11	1	Screw-HHF
26	68-6710	1	Roller
27	117-5717	1	Harness-Wire, Deck
28	119-0081	1	Mount-Switch, RH
29	115-5300	2	Proximity Switch ASM
29:1	117-3207	2	Nut-Hex

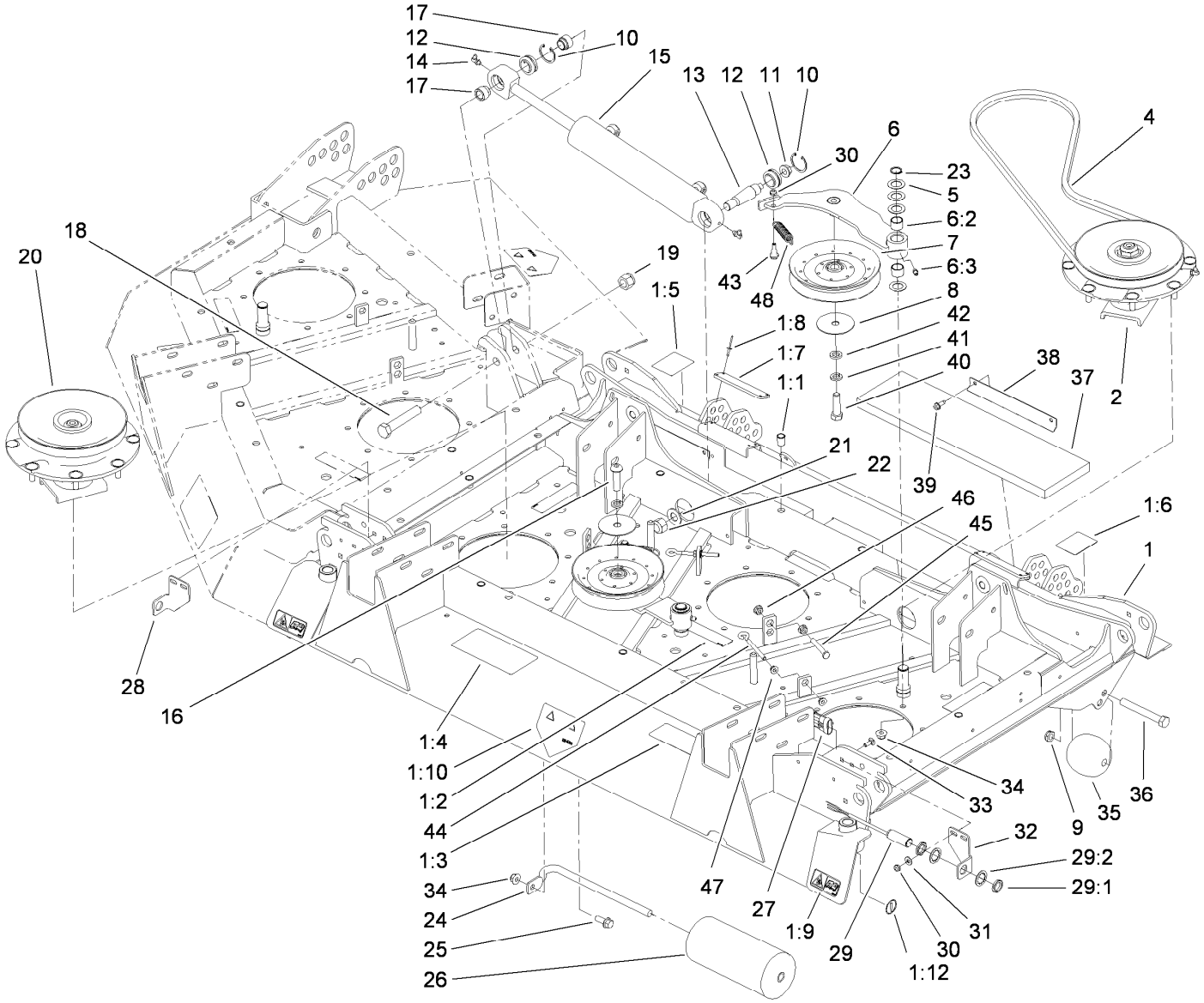

Center Deck Assembly (continued)

Ref.	Part Number	Qty.	Description
29:2	117-3208	2	Washer-Lock, Internal Tooth
30	3296-56	8	Nut-Lock, NI
31	3256-22	4	Washer-Flat
32	119-0080	1	Mount-Switch, LH
33	3229-1	4	Bolt-CARR
34	104-8301	45	Nut-HF, NI
35	29-4820	2	Roller
36	325-17	2	Screw-HH
37	106-7179	2	Pad-Foam
38	106-7227	4	Support-Pad

Ref.	Part Number	Qty.	Description
39	32104-95	8	Screw-HWH
40	325-7	3	Screw-HH
41	3253-7	4	Washer-Lock
42	9202424	3	Spacer
43	104-0858	4	Bolt-Shoulder
44	68-0090	4	Screw-Adjusting
45	9114524	4	Bolt-TAP, HH
46	32128-26	8	Nut-Flange
47	32128-14	8	Nut-HF
48	107938	4	Spring-Extension

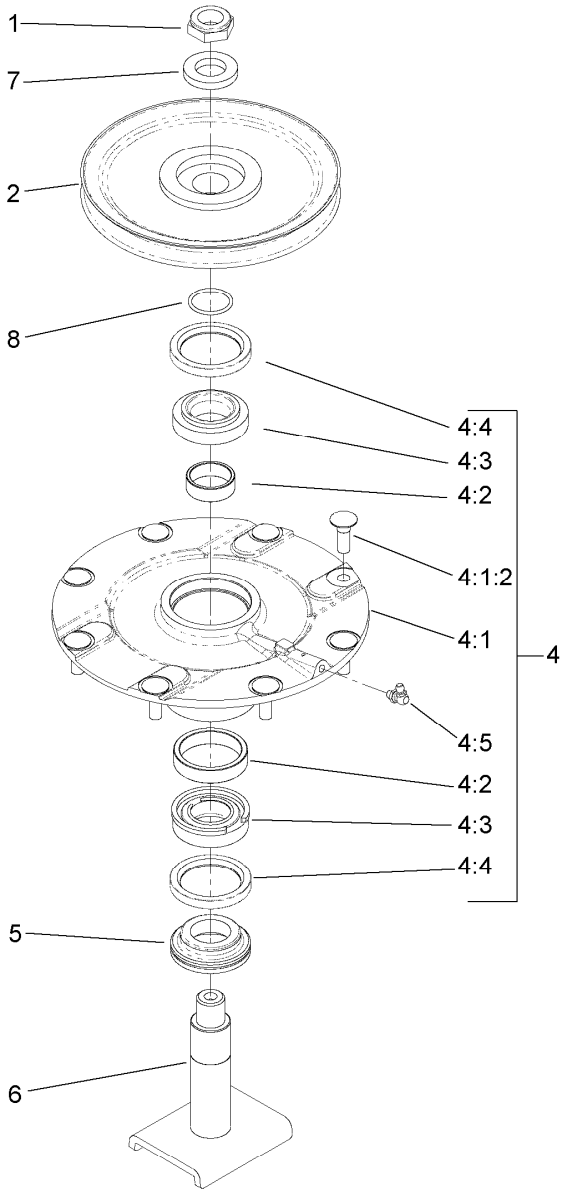

Low Driven Spindle Assembly No. 119-4776

Ref.	*Part Number*	*Qty.*	*Description*
1	3296-60	1	Nut-Lock, NI
2	104-3546	1	Pulley-Driven, Low
4	119-4775	1	Spindle Housing ASM
4:1		1	Spindle ASM ●
4:1:2	114-8195	8	Bolt-Ribbed Neck
4:2	120-5577	1	Bearing Spacer Set
4:3	110-8297	1	Bearing ASM
4:4	253-154	2	Seal-Oil
4:5	302-60	1	Fitting-Grease
5	69-6950	1	Spacer-Shaft, Spindle
6	104-3554	1	Shaft-Spindle
7	120-5576	1	Washer-Hardened
8	106-7159	1	O-Ring

● Not serviced separately

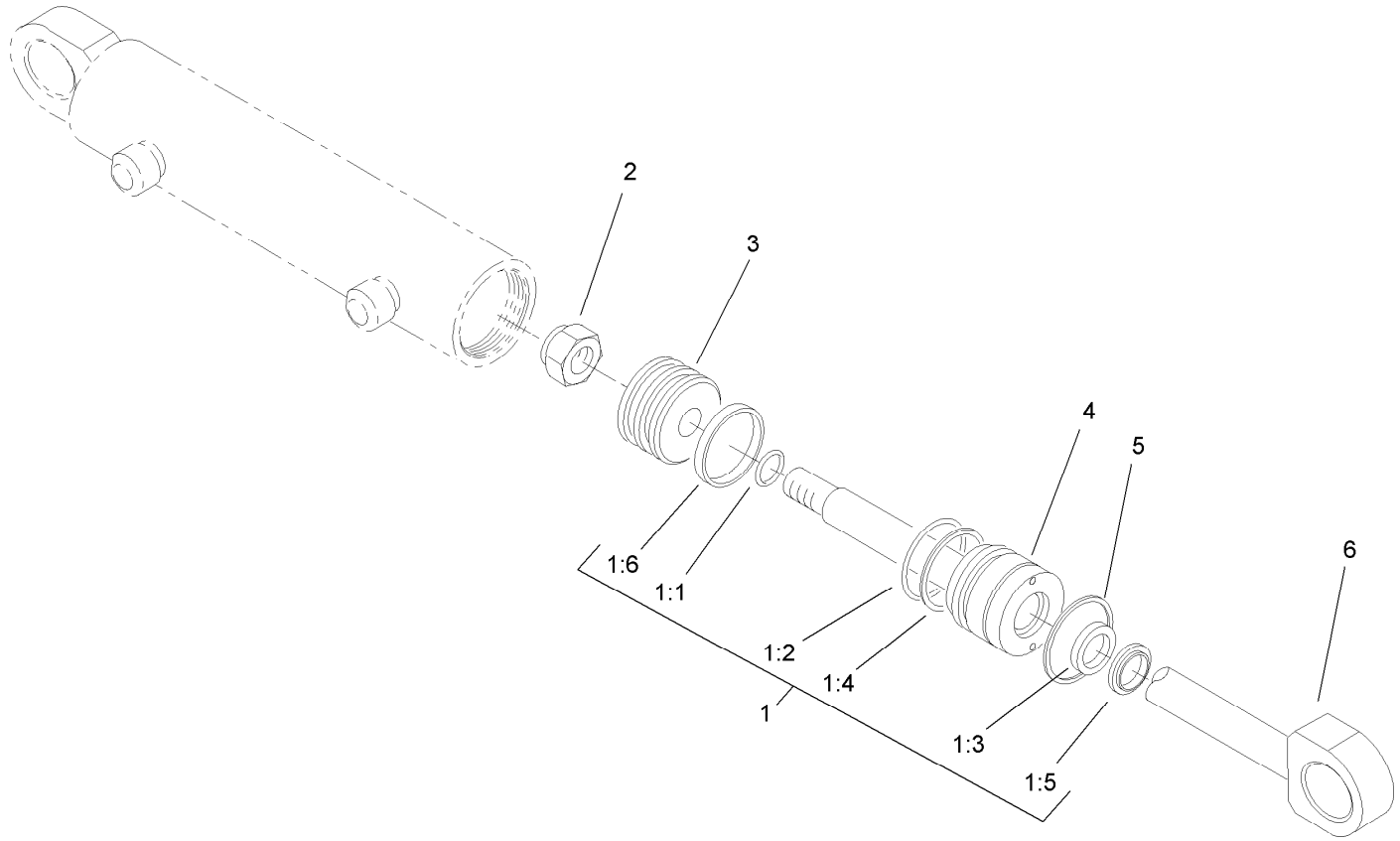

Wing Lift Cylinder Assembly No. 107-0190

Ref.	*Part Number*	*Qty.*	*Description*
1	107-0247	1	Seal Kit
1:1		1	O-Ring ●
1:2		1	O-Ring ●
1:3		1	Seal ●
1:4		1	Back-Up ●
1:5		1	Wiper ●
1:6		1	Seal W/O-Ring ●
2		1	Locknut ●
3		1	Piston ●
4		1	Head ●
5		1	Ring-Retaining ●
6		1	Rod ASM ●

● Not serviced separately

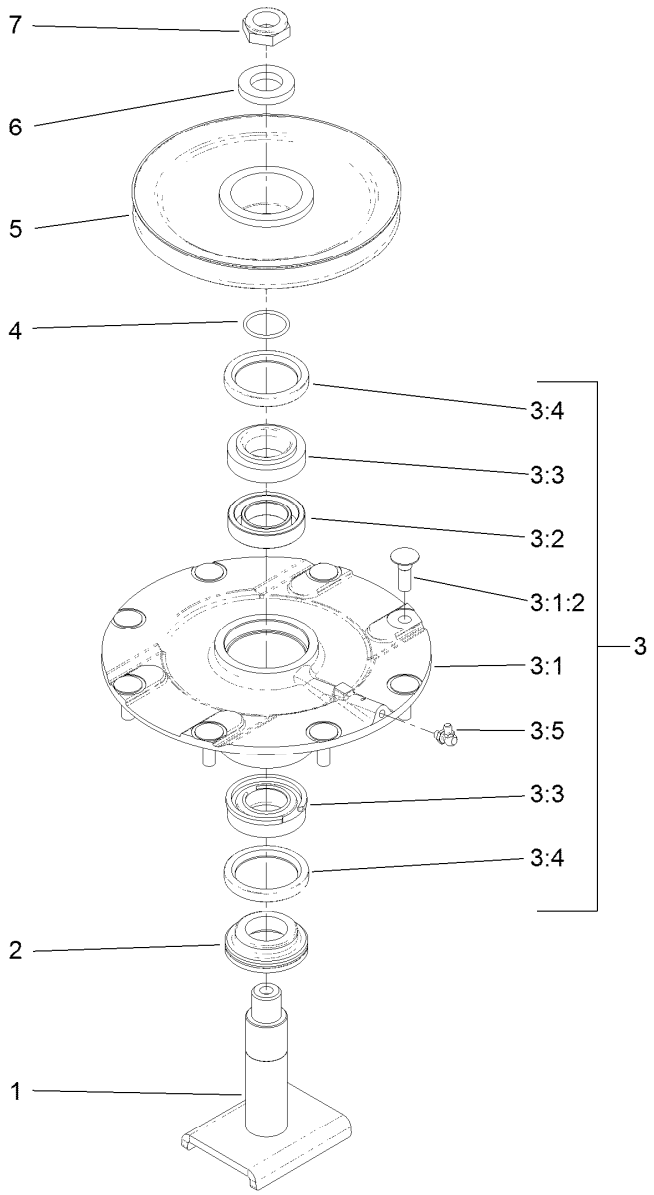

High Driven Spindle Assembly No. 119-4549

Ref.	Part Number	Qty.	Description
1	104-3554	1	Shaft-Spindle
2	69-6950	1	Spacer-Shaft, Spindle
3	119-4775	1	Spindle Housing ASM
3:1		1	Spindle ASM ●
3:1:2	114-8195	8	Bolt-Ribbed Neck
3:2	120-5577	1	Bearing Spacer Set
3:3	110-8297	1	Bearing ASM
3:4	253-154	2	Seal-Oil
3:5	302-60	1	Fitting-Grease
4	106-7159	1	O-Ring
5	104-3548	1	Pulley-Driven, High
6	120-5576	1	Washer-Hardened
7	3296-60	1	Nut-Lock, NI

● Not serviced separately

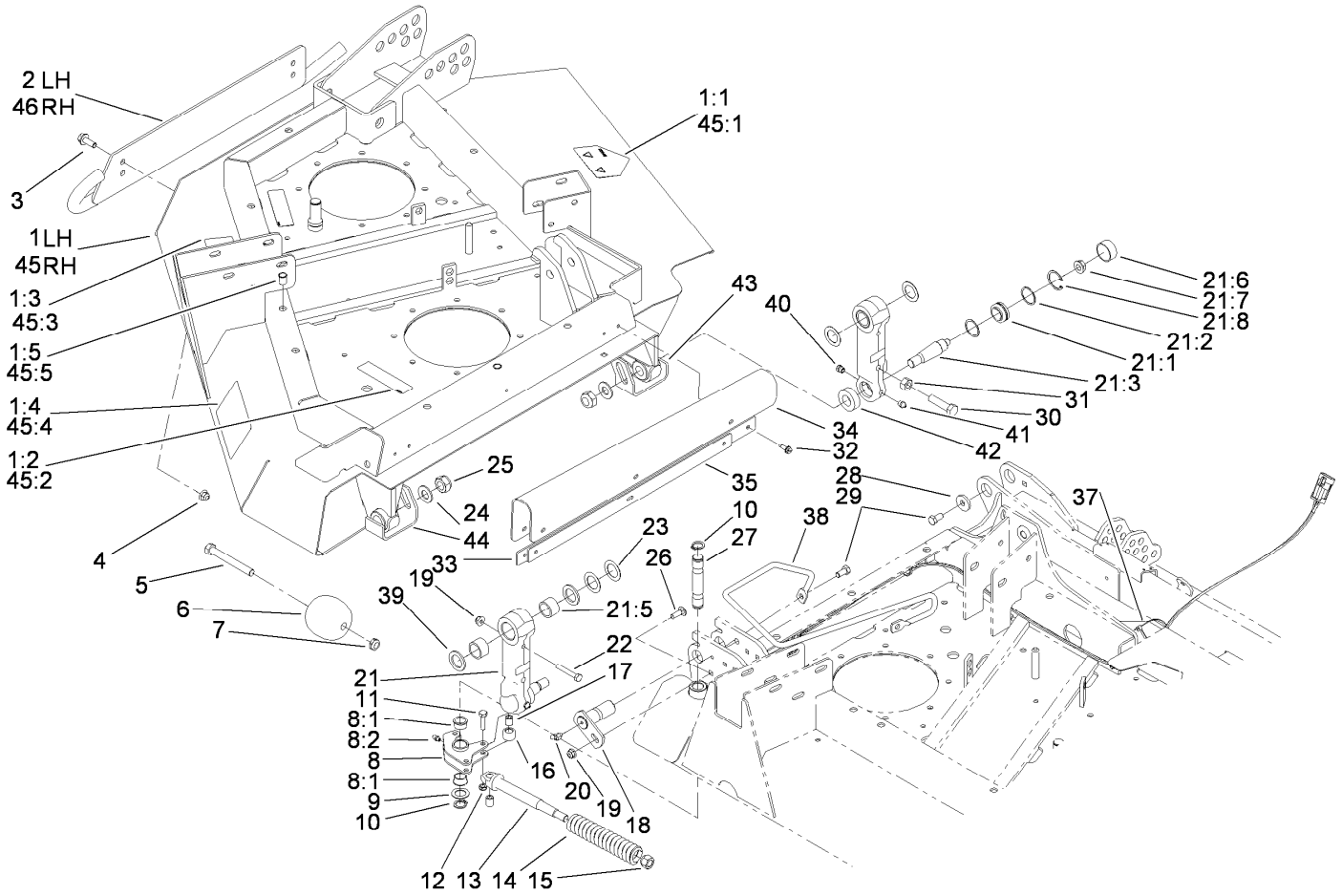

Right Hand and Left Hand Deck Installation Assembly

Ref.	Part Number	Qty.	Description
1	110-3298	1	RH Deck ASM
1:1	120-6604	1	Decal-Danger
1:2	100-6578	2	Decal-Danger
1:3	93-7818	1	Decal-Torque, Blade Bolt
1:4	100-5622	1	Decal-HOC
1:5	32148-9	4	Insert-Nut
2	105-7430-01	1	RH Skid ASM
3	3234-42	4	Screw-HHF
4	104-8301	4	Nut-HF, NI
5	325-17	2	Screw-HH
6	29-4820	2	Roller
7	3296-45	2	Nut-Lock, NI
8	105-7469	2	Latch ASM
8:1	256-252	2	Bearing-Flange
8:2	302-5	1	Fitting-Grease
9	1278	2	Washer
10	32120-93	4	Ring-Retaining
11	322-6	6	Screw-HH
12	3296-47	6	Nut-Lock, NI

Ref.	Part Number	Qty.	Description
13	106-4317	2	Support-Spring
14	86-2560	2	Spring-Comp
15	242-50	2	Nut-Lug
16	86-2120	4	Roller-Lock
17	86-2090	6	Bushing
18	106-7171	4	Pin Pivot ASM
19	104-8300	6	Nut-HF, NI
20	302-11	4	Fitting-Lube, 45 DEG
21	112-9116	4	Link ASM
21:1	105-7441	1	Bearing-Spherical
21:2	110-6198	2	Washer-Flat
21:3	105-7468	1	Stud-Tapered
21:5	106-7248	2	Bushing
21:6	110-6197	1	Cap-Dust
21:7	32128-42	1	Nut-HF
21:8	32151-34	1	Ring-Retaining
22	322-10	2	Screw-HH
23	9547	8	Washer-Thrust
24	3256-27	4	Washer-Flat

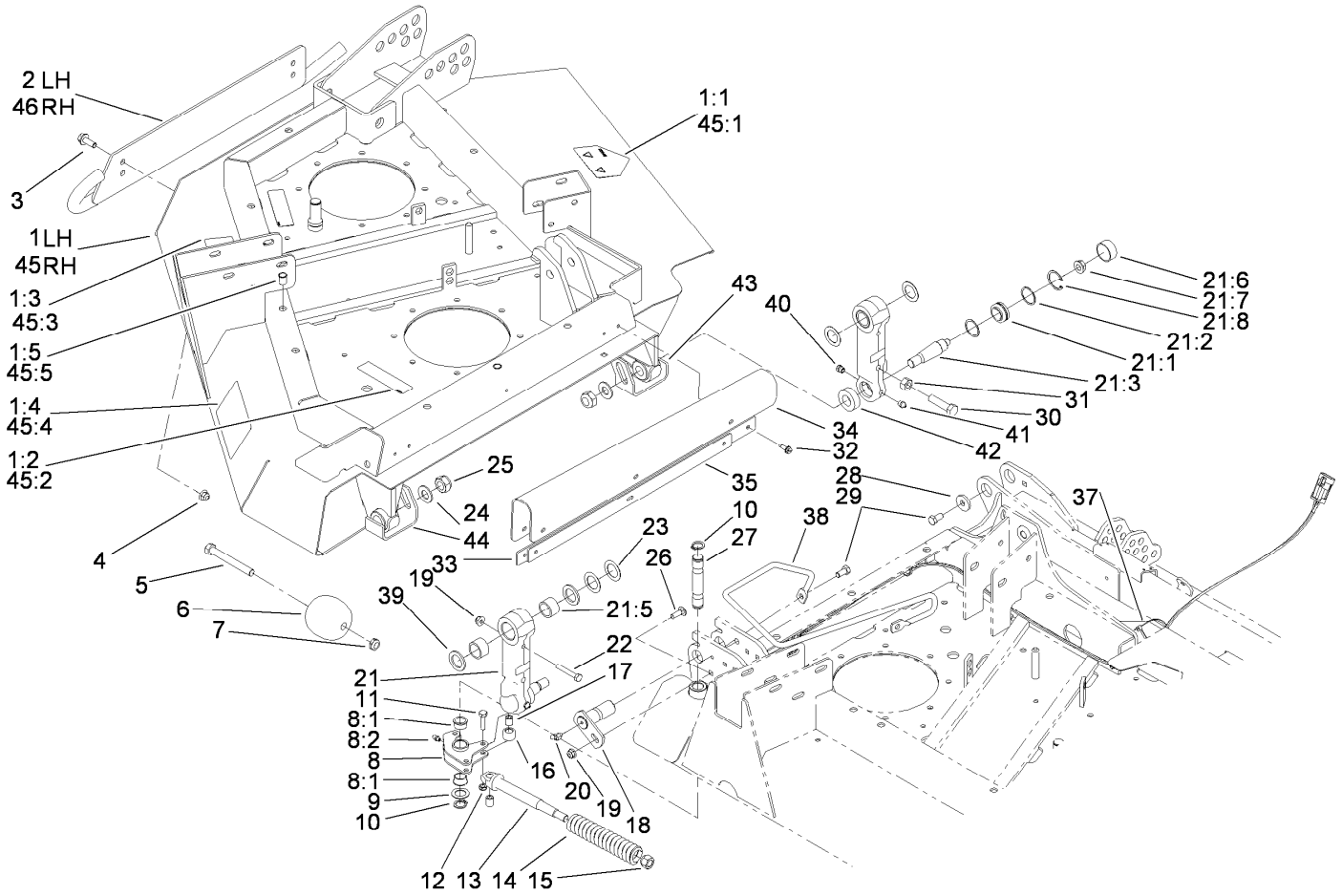

Right Hand and Left Hand Deck Installation Assembly (continued)

Ref.	Part Number	Qty.	Description
25	112-9119	4	Nut-Lock, NI
26	3230-2	4	Bolt-CARR
27	105-7482	2	Pin-Latch
28	53-6380	2	Washer-Flat
29	323-4	4	Screw-HH
30	325-8	2	Screw-HH
31	3217-9	2	Nut-HH
32	32104-95	12	Screw-HWH
33	107-0170-03	2	Strap-Wing
34	106-4334	2	Shield-Flex
35	107-0171-03	2	Strap-Shield
37	3290-379	4	Tie-Cable
38	107-0182	1	Guide-Hose, RH
39	92-7845	4	Spacer-Hardened

Ref.	Part Number	Qty.	Description
40	302-39	4	Fitting-Plug
41	302-52	4	Fitting-Grease
42	110-6196	4	Washer-Foam
43	112-9106-01	2	Skid-Link (Left Front, Right Rear)
44	112-9105-01	2	Skid-Link (Right Front, Left Rear)
45	110-3299	1	LH Deck ASM
45:1	120-6604	1	Decal-Danger
45:2	100-6578	2	Decal-Danger
45:3	93-7818	1	Decal-Torque, Blade Bolt
45:4	100-5622	1	Decal-HOC
45:5	32148-9	4	Insert-Nut
46	105-7437-01	1	LH Skid ASM

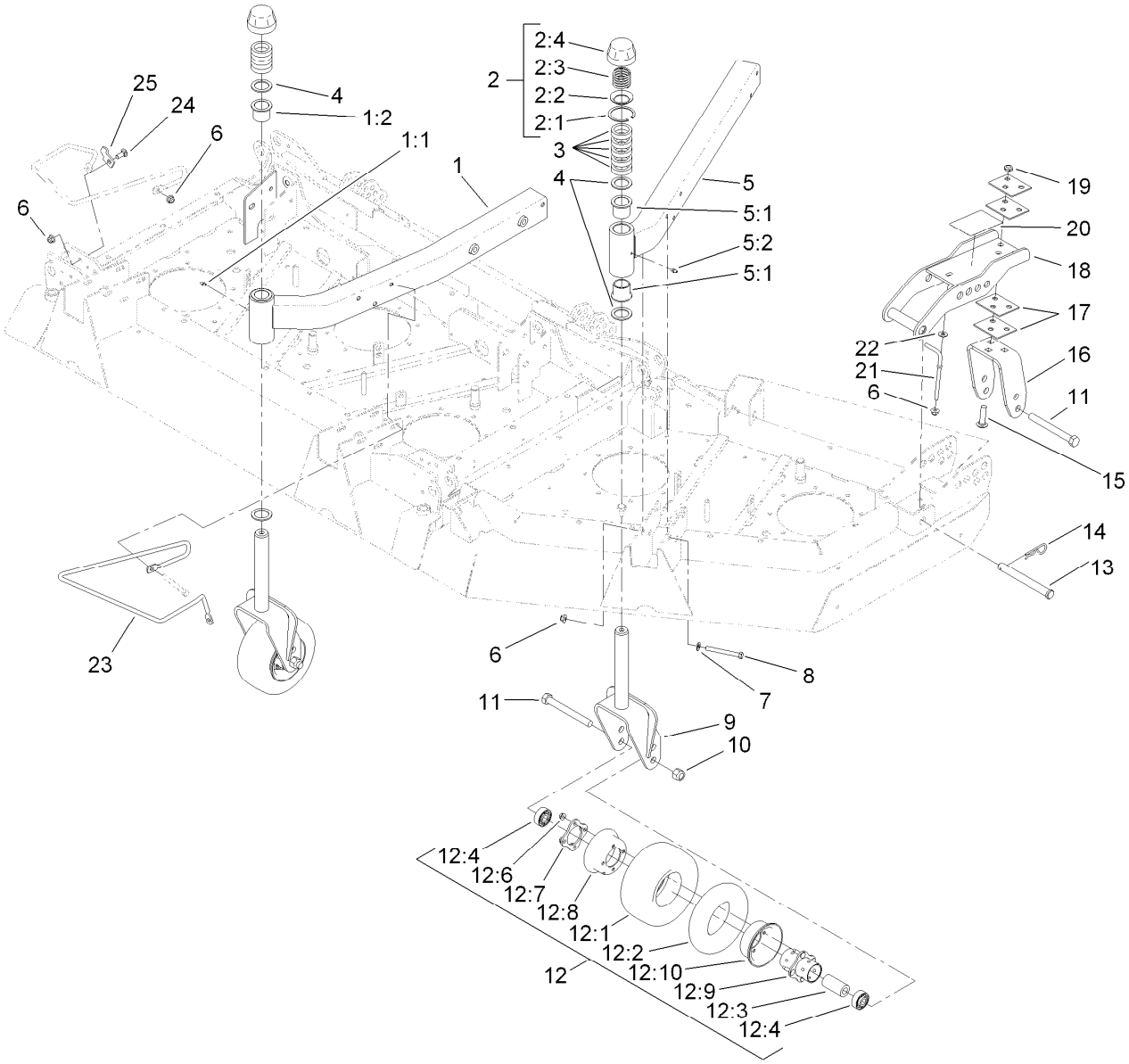

Caster Wheel Assembly

Ref.	Part Number	Qty.	Description
1	105-7414	2	Center Castor Arm ASM
1:1	69-6470	2	Bushing-Castor
1:2	302-5	1	Fitting-Grease
2	92-9727	4	HOC Cap ASM
2:1	92-5581	1	Ring-Retaining
2:2	92-5583	1	Washer-Cap
2:3	92-9726	1	Spring-Compression
2:4	92-8861	1	Cap-HOC
3	69-1510	20	Spacer
4	69-6860	8	Washer-Thrust
5	105-7429	2	Side Castor Arm ASM
5:1	69-6470	2	Bushing-Castor
5:2	302-5	1	Fitting-Grease
6	104-8301	24	Nut-HF, NI
7	3256-24	18	Washer-Flat
8	323-15	20	Screw-HH
9	92-7750-01	4	Fork-Castor
10	3296-53	6	Nut-Lock, NI
11	327-24	6	Screw-HH
12	93-9938	6	Wheel ASM
12:1	93-9939	1	Tire

Ref.	Part Number	Qty.	Description
12:2	68-8950	1	Tube-Inner (W/Valve)
12:3	93-4241	1	Spacer-Bearing, Inner
12:4	120-3366	2	Bearing
12:6	32128-16	4	Nut-HHF
12:7	93-4242	1	Plate
12:8	93-4239	1	Rim-Wheel, Half
12:9	93-5980	1	Hub
12:10	95-2741	1	Rim-Wheel, Half
13	100-5569	4	Pin-Clevis
14	3290-343	4	Pin-Hair
15	3233-4	6	Screw-CARR
16	105-7457-01	2	Fork-Rear
17	104-7524	8	Shim
18	104-7529-01	2	Bracket-Castor
19	3296-45	6	Nut-Lock, NI
20	100-5623	1	Decal-HOC
20	104-3579	1	Decal-HOC
21	106-2047	2	Rod-Tension
22	3256-3	2	Washer-Flat
23	107-0183	1	Guide-Hose, LH

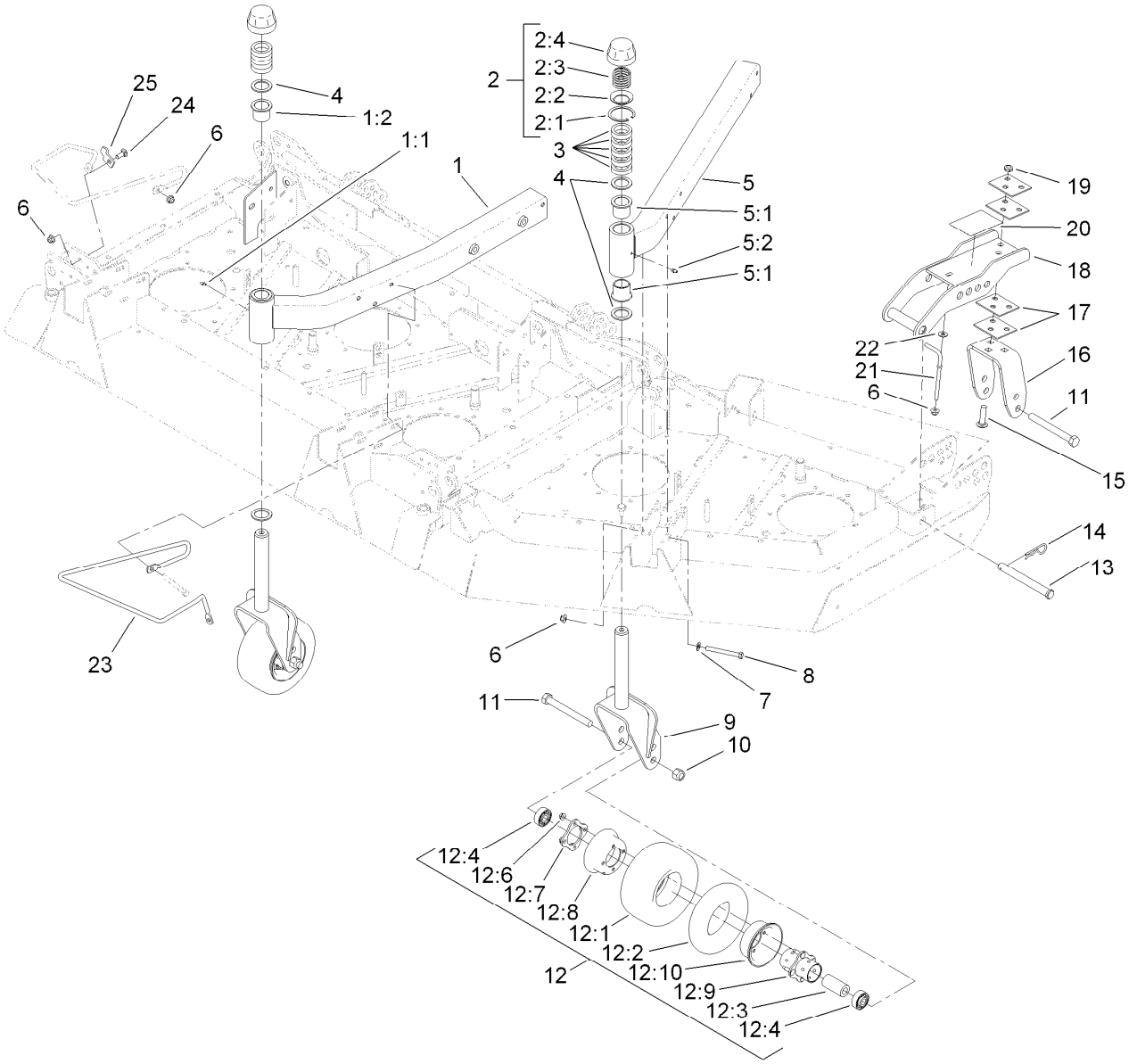

Caster Wheel Assembly (continued)

Ref.	*Part Number*	*Qty.*	*Description*
24	3231-2	2	Bolt-CARR
25	107-0229	2	Tab-Guide

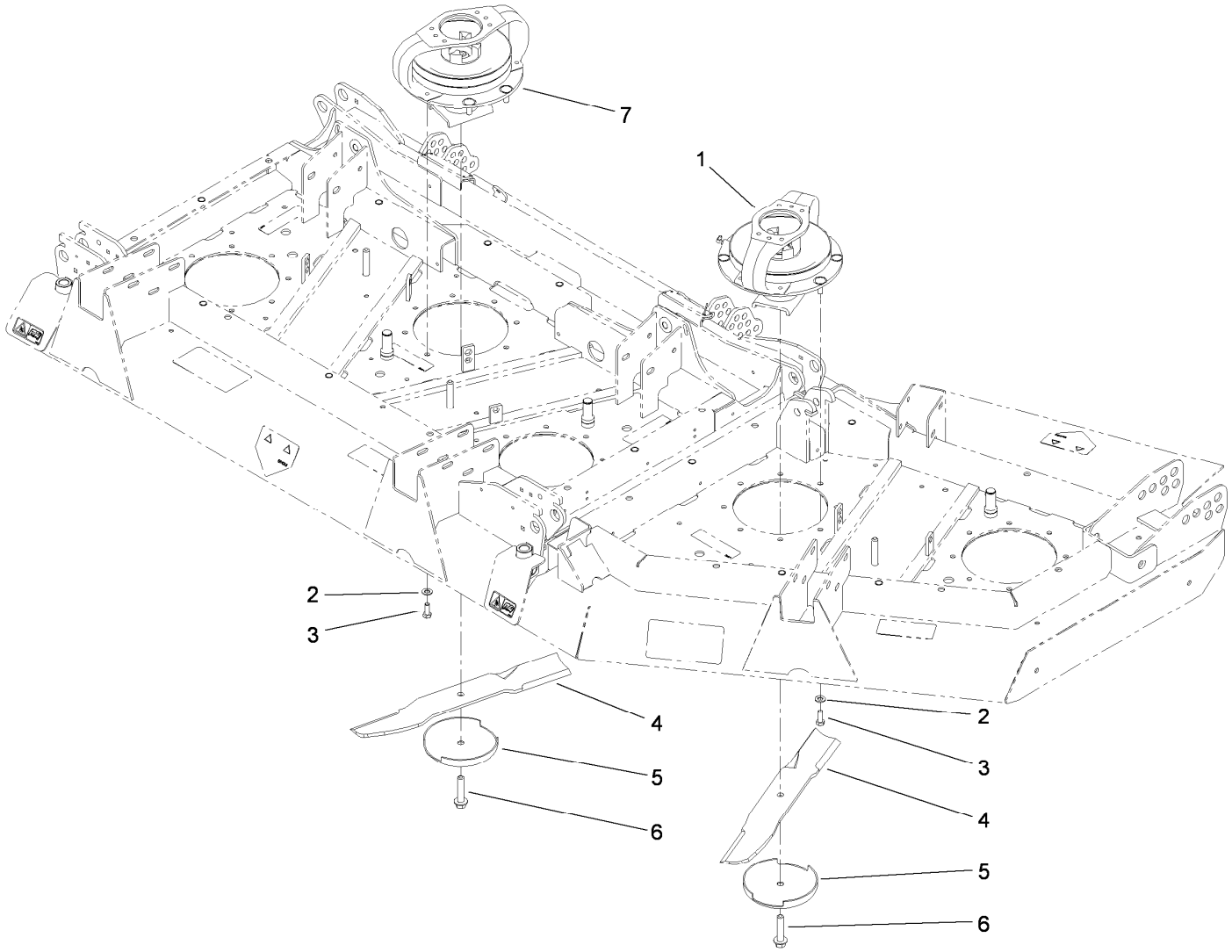

Spindle and Blade Assembly

Ref.	*Part Number*	*Qty.*	*Description*
1	119-4547	2	Driving Spindle ASM
2	3256-24	12	Washer-Flat
3	323-6	12	Screw-HH
4	106-7166-03	7	Blade-Combination (19 Inch)
5	72-9361	7	Cup-Scalp, Anti
6	92-5816	7	Bolt-Blade
7	119-5298	1	Double-Driven Spindle ASM

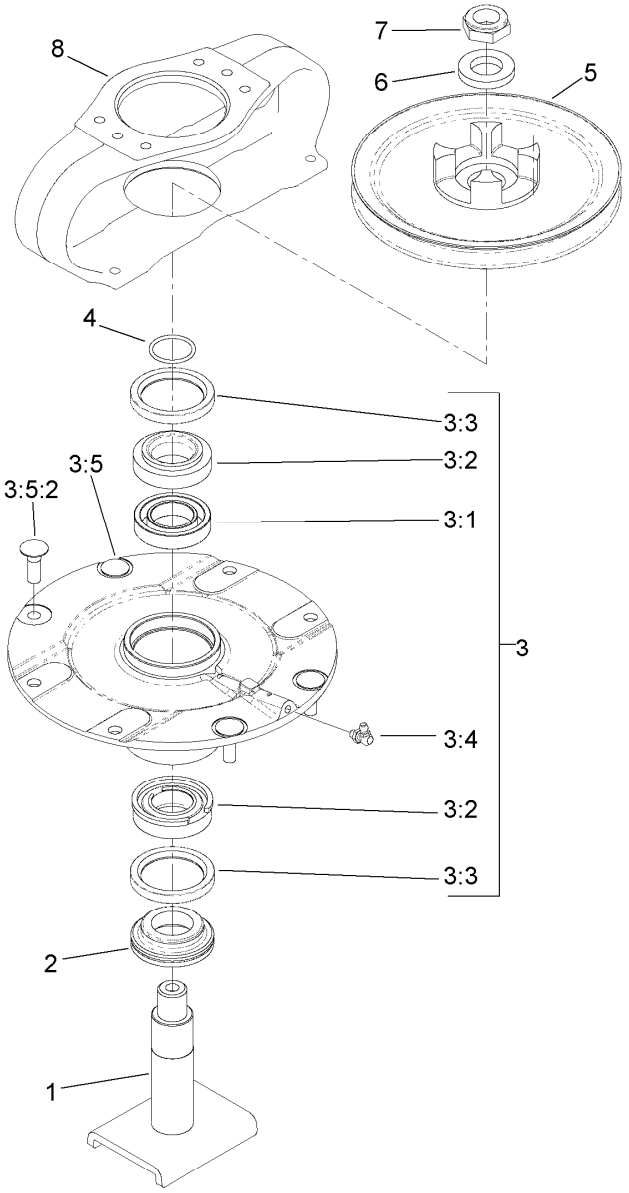

Driving Spindle Assembly No. 119-4547

Ref.	Part Number	Qty.	Description
1	104-3554	1	Shaft-Spindle
2	69-6950	1	Spacer-Shaft, Spindle
3	119-4546	1	Spindle Housing ASM
3:1	120-5577	1	Bearing Spacer Set
3:2	110-8297	1	Bearing ASM
3:3	253-154	2	Seal-Oil
3:4	302-60	1	Fitting-Grease
3:5		1	Spindle Assembly ●
3:5:2	114-8195	4	Bolt-Ribbed Neck
4	106-7159	1	O-Ring
5	104-3545	1	Pulley-Driving
6	120-5576	1	Washer-Hardened
7	3296-60	1	Nut-Lock, NI
8	104-3544	1	Mount-Motor, Drive

● Not serviced separately

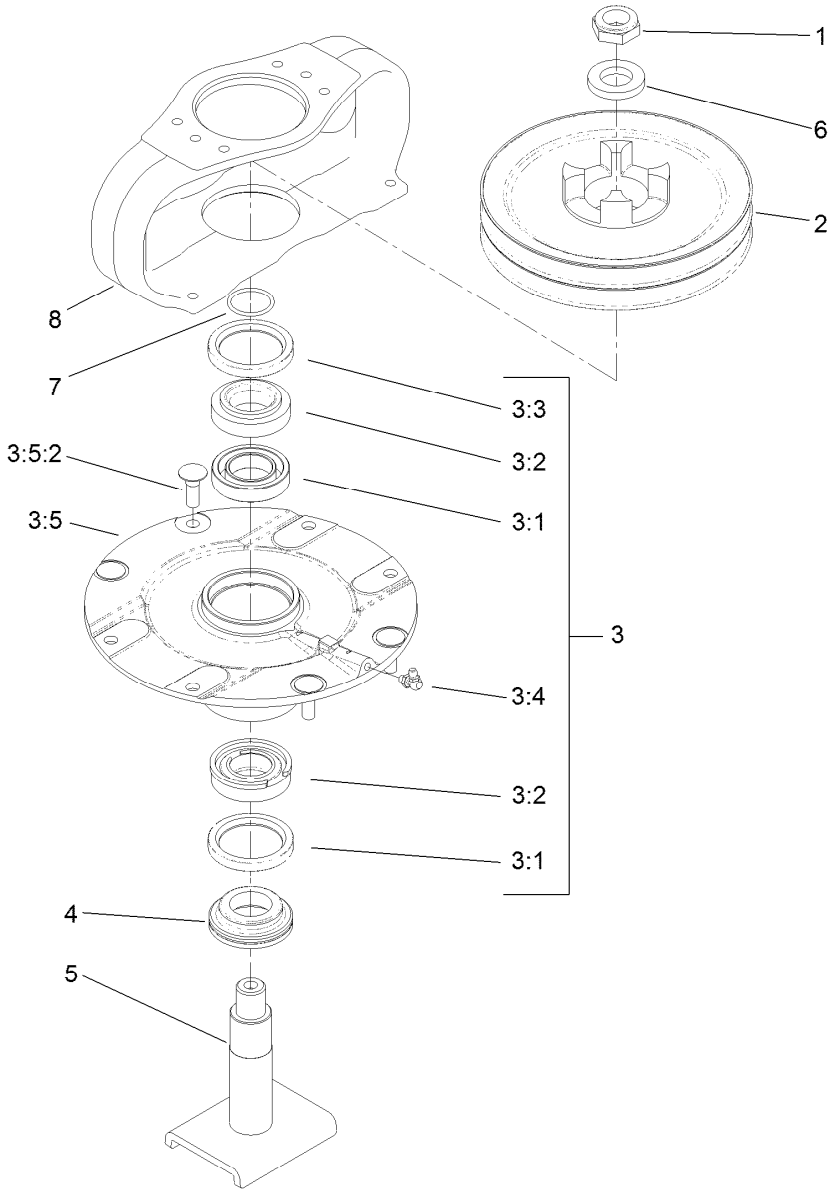

Double Driven Spindle Assembly No. 119-5298

Ref.	*Part Number*	*Qty.*	*Description*
1	3296-60	1	Nut-Lock, NI
2	106-4269	1	Pulley-Drive, Double
3	119-4546	1	Spindle Housing ASM
3:1	120-5577	1	Bearing Spacer Set
3:2	110-8297	1	Bearing ASM
3:3	253-154	2	Seal-Oil
3:4	302-60	1	Fitting-Grease
3:5		1	Spindle Assembly ●
3:5:2	114-8195	4	Bolt-Ribbed Neck
4	69-6950	1	Spacer-Shaft, Spindle
5	104-3554	1	Shaft-Spindle
6	120-5576	1	Washer-Hardened
7	106-7159	1	O-Ring
8	106-4268	1	Mount-Motor, Drive

● Not serviced separately

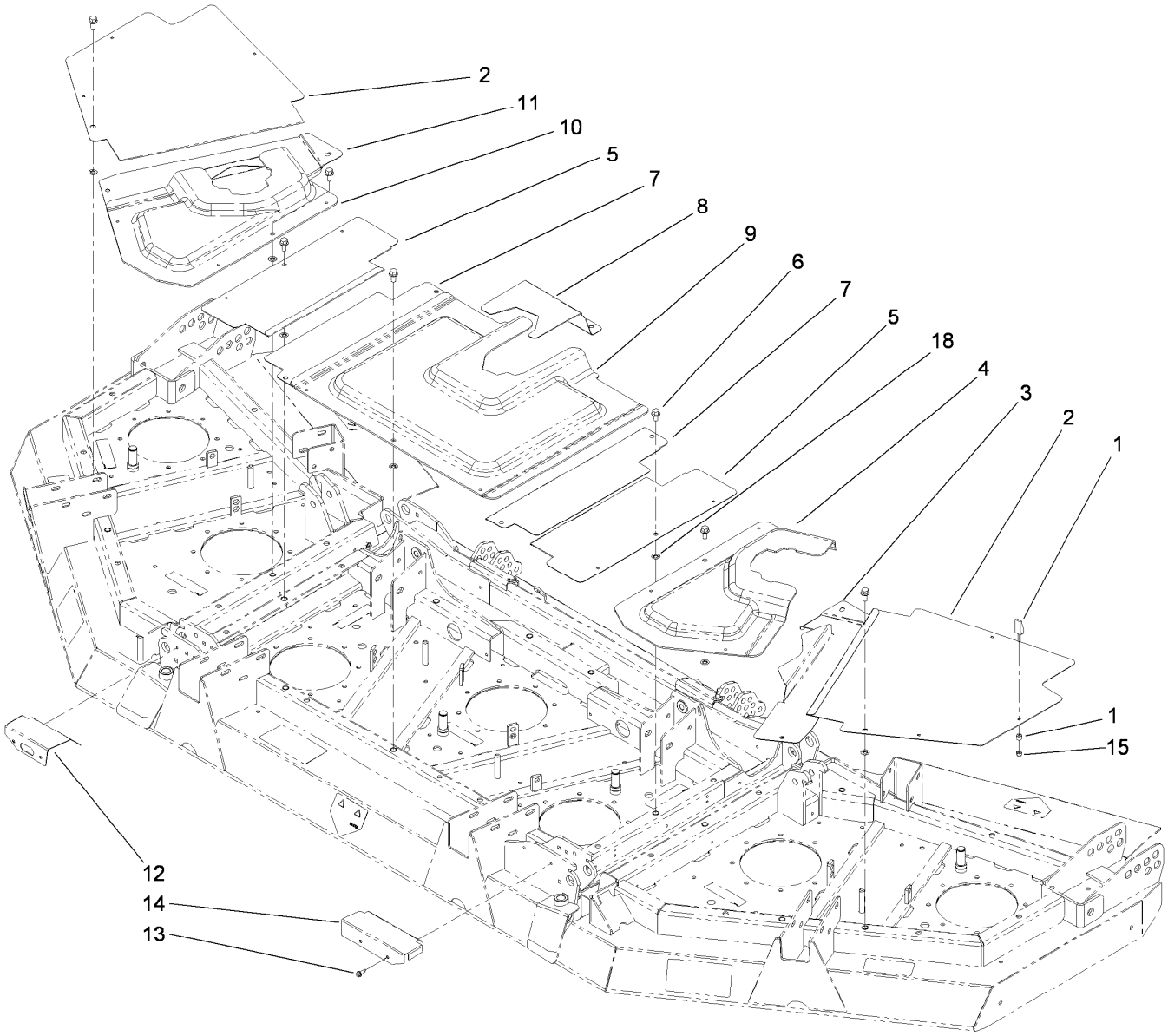

Deck Cover Assembly

Ref.	Part Number	Qty.	Description
1	74-5950	18	Latch-Swell
2	106-4256-03	2	Cover-Outer, Wing
3	106-4258-03	1	Cover-Inner, LH
4	106-4260	1	Cover-Mount, LH
5	106-4252-03	2	Cover-Outer, Center
6	3234-1	17	Screw-HHF
7	106-4255-03	2	Cover-Inner, Center
8	106-4253-03	1	Cover-Rear, Center

Ref.	Part Number	Qty.	Description
9	106-4254	1	Cover-Front, Center
10	106-4259	1	Cover-Mount, RH
11	106-4257-03	1	Cover-Inner, RH
12	106-7173-01	1	Shield-RH
13	32104-95	4	Screw-HWH
14	106-7174-01	1	Shield-LH
15	1-804254	18	Nut-Lock, HH
18	107-3154	7	Nut-Push

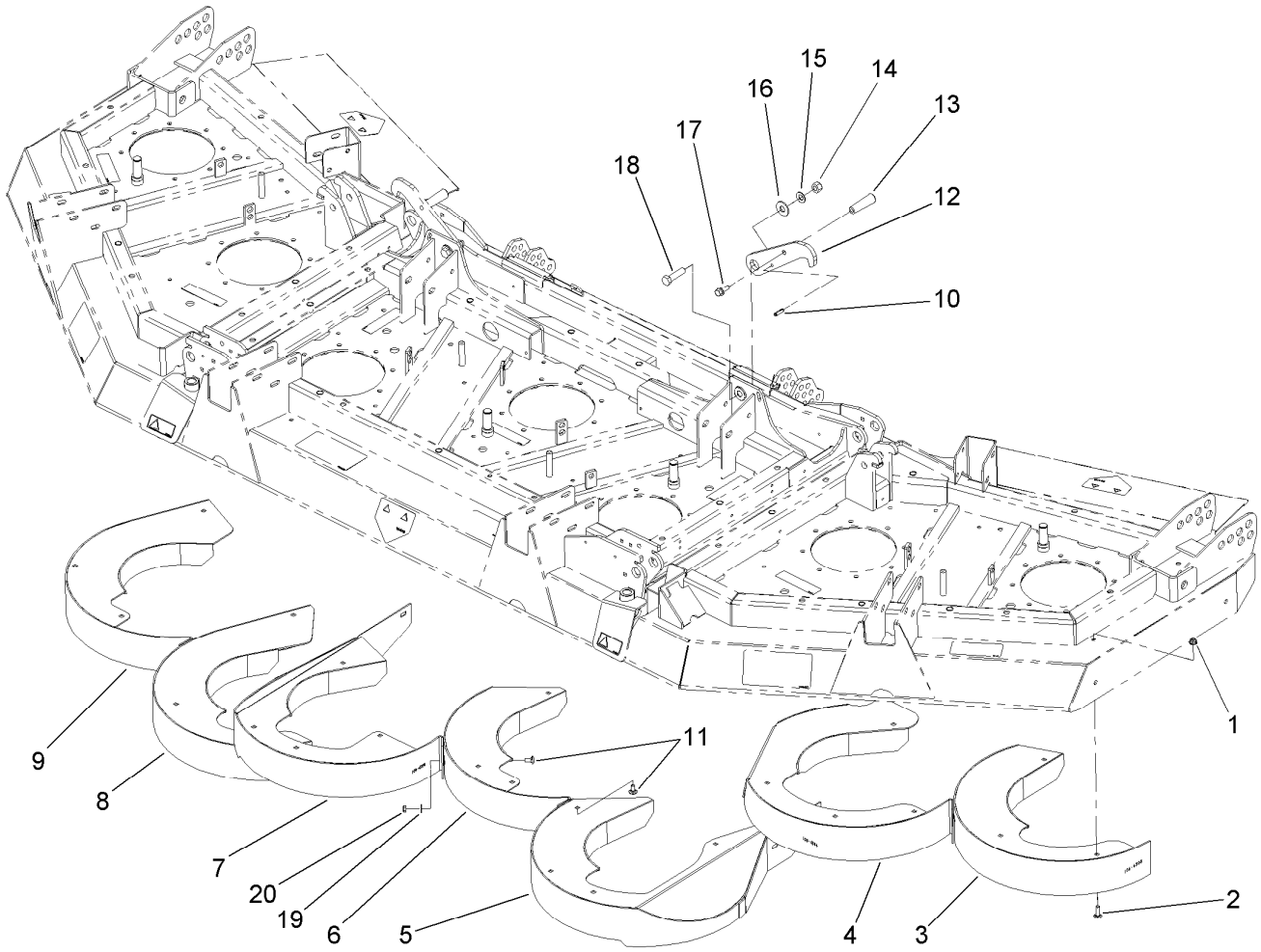

Rear Discharge Baffle Assembly

Ref.	*Part Number*	*Qty.*	*Description*
1	104-8300	24	Nut-HF, NI
2	3230-22	23	Screw-CARR
3	106-4308-01	1	LH Out Chamber ASM
4	106-4304-01	1	LH Inside Chamber ASM
5	106-4291-01	1	LH Center Chamber ASM
6	106-4294-01	1	Center Chamber ASM
7	106-4286-01	1	RH Center Chamber ASM
8	106-4298-01	1	RH Inside Chamber ASM
9	106-4301-01	1	RH Out Chamber ASM
10	32121-24	2	Pin-Spring
11	3230-18	5	Screw-CARR
12	106-4340-01	2	Latch-Wing
13	233-39	2	Knob-Control
14	3296-25	2	Nut-Lock, NI
15	3290-483	2	Washer-Conical
16	3256-6	2	Washer-Flat
17	3234-11	2	Screw-HHF
18	325-8	2	Screw-HH
19	3256-23	4	Washer-Plain
20	3296-47	4	Nut-Lock, NI

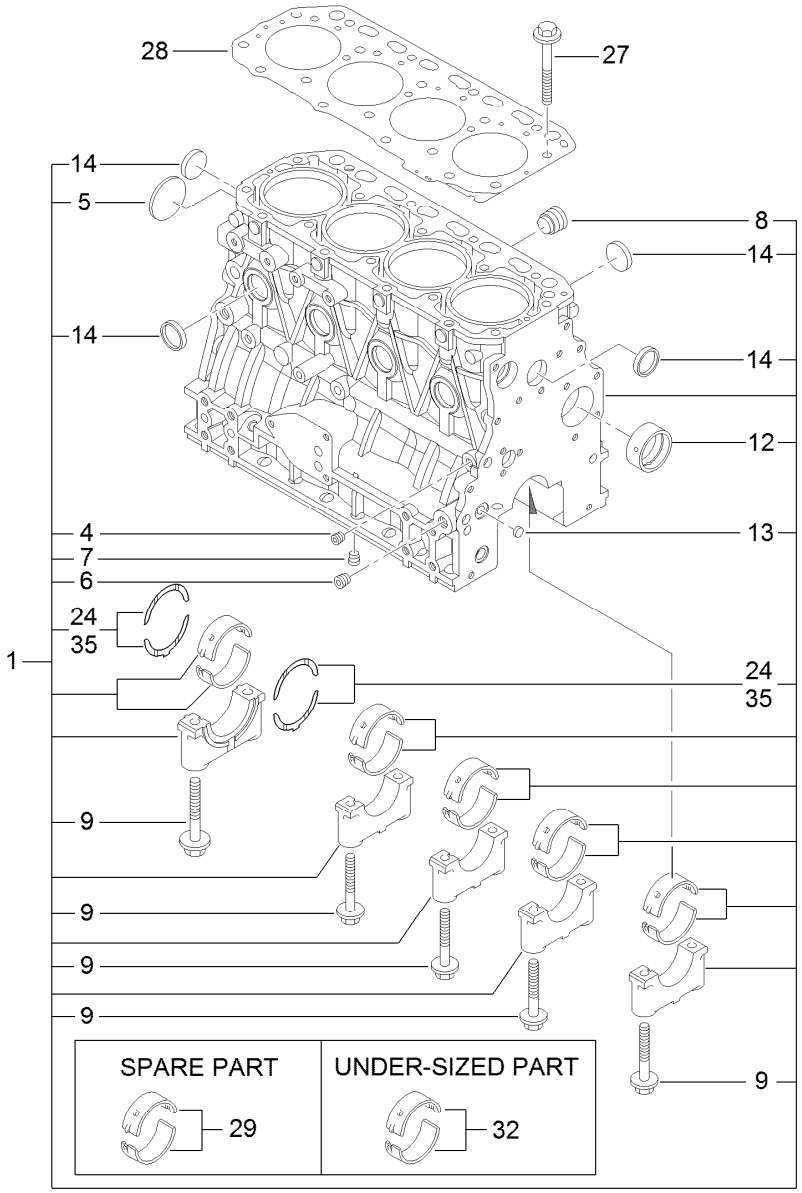

Cylinder Block Assembly

Ref.	Part Number	Qty.	Description
1	125-7244	1	Cylinder Block Asm
4	125-6969	1	Plug
5	125-6980	1	Plug
6	125-6973	1	Plug
7	125-6973	1	Plug
8	125-7170	1	Plug
9	125-7007	10	Bolt
12	125-7108	1	Bushing

Ref.	Part Number	Qty.	Description
13	125-7237	2	Plug
14	125-7239	8	Plug
24	125-7010	2	Metal-Thrust
27	125-7006	18	Bolt
28	125-7049	1	Gasket-Head
29	125-6981	5	Metal-Main
32	125-7009	5	Metal-Main (0.25)
35	125-7011	1	Metal-Thrust (0.25)

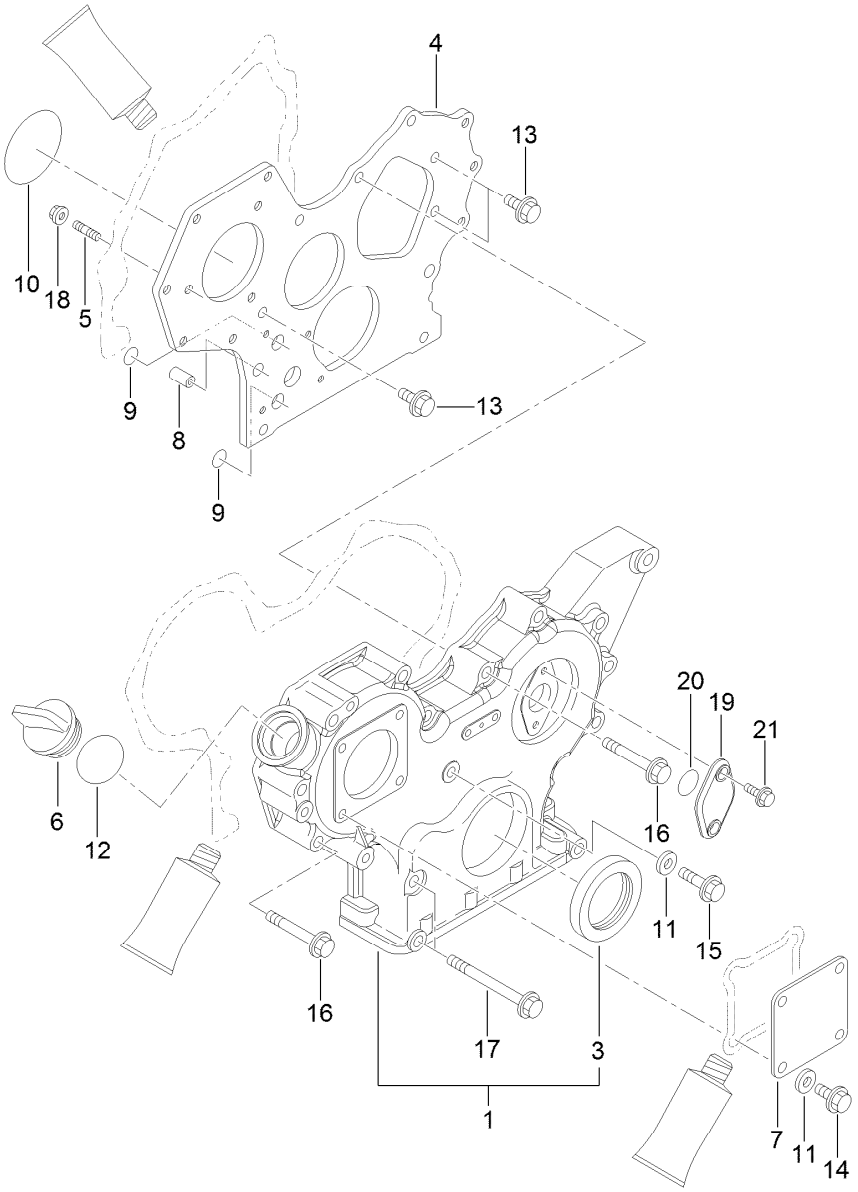

Gear Housing Assembly

Ref.	Part Number	Qty.	Description
1	125-7247	1	Case ASM
3	125-6944	1	Seal-Oil
4	125-6936	1	Flange
5	125-6919	3	Stud
6	125-6972	1	Cover-Filler
7	125-6977	1	Cover
8	125-7107	2	Pipe
9	125-6909	2	O-Ring
10	125-6957	1	O-Ring
11	125-7174	5	Washer-Seal

Ref.	Part Number	Qty.	Description
12	125-7197	1	O-Ring
13	125-7214	3	Bolt
14	125-7214	4	Bolt
15	125-7216	1	Bolt
16	125-7221	12	Bolt
17	125-7224	3	Bolt
18	125-7229	3	Nut
19	125-6950	1	Cover
20	125-7199	1	O-Ring
21	125-7208	2	Bolt

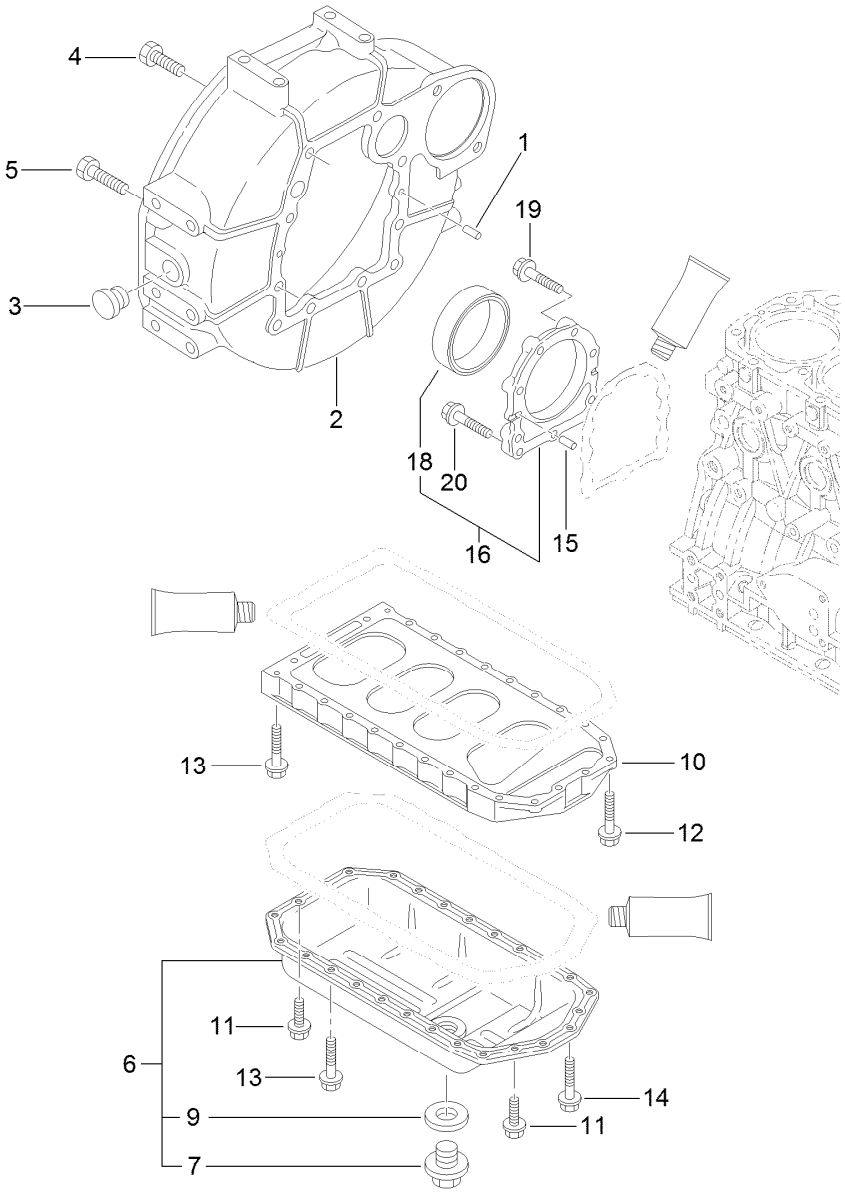

Flywheel Housing and Oil Sump Assembly

Ref.	Part Number	Qty.	Description
1	125-6995	2	Pin
2	125-7100	1	Housing
3	125-6910	1	Cap
4	125-7226	6	Bolt
5	125-7227	4	Bolt
6	125-7241	1	Oil Sump ASM
7	125-6912	1	Plug-Drain
9	125-7177	1	Washer-Seal
10	125-7035	1	Spacer

Ref.	Part Number	Qty.	Description
11	125-7214	4	Bolt
12	125-7215	2	Bolt
13	125-7219	20	Bolt
14	125-7220	4	Bolt
15	125-6995	2	Pin
16	125-6996	1	Case ASM
18	125-7106	1	Seal-Oil
19	125-7045	6	Bolt
20	125-7217	3	Bolt

Cylinder Head and Bonnet Assembly

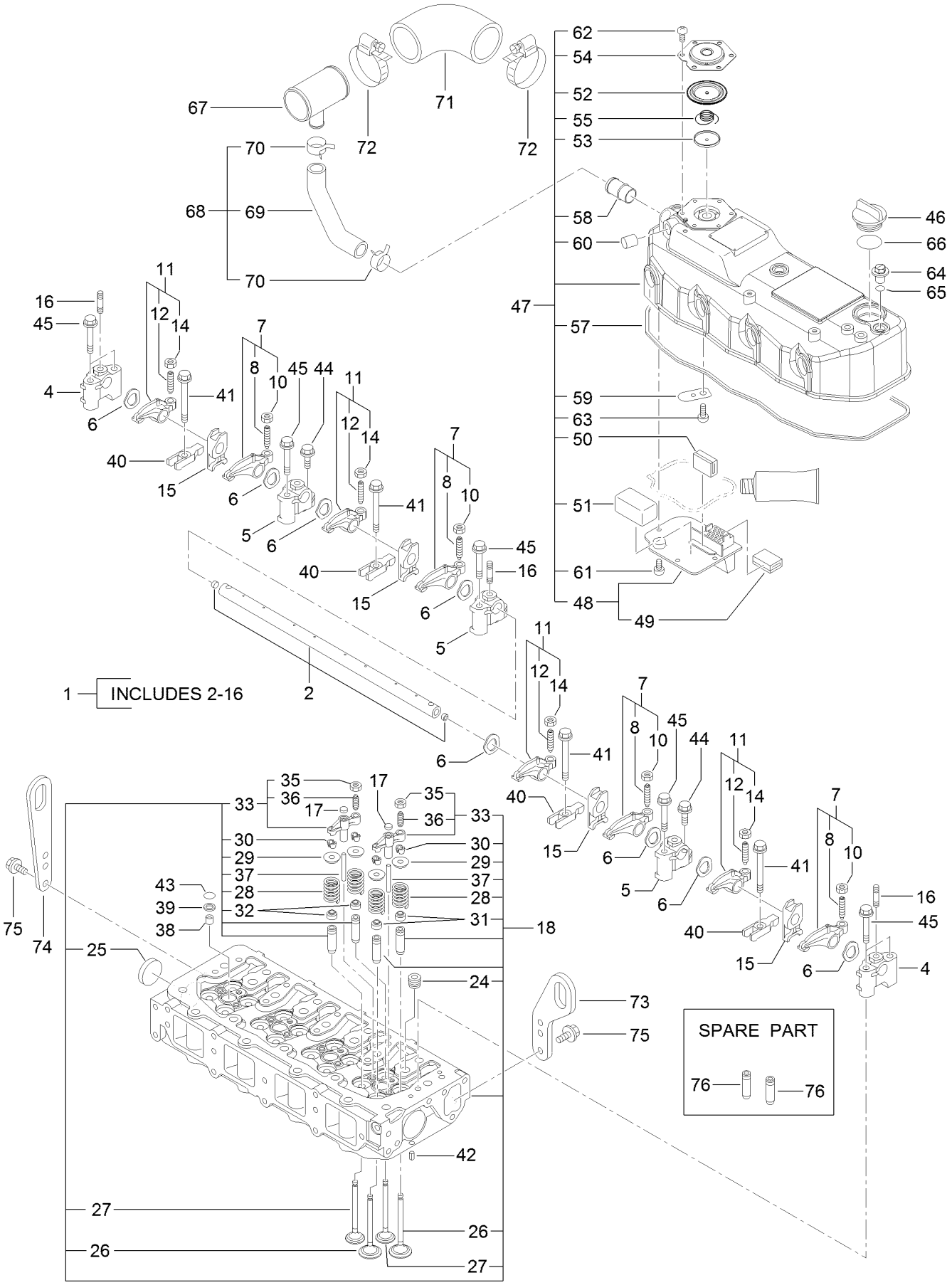

Cylinder Head and Bonnet Assembly (continued)

Ref.	Part Number	Qty.	Description
1	125-7055	1	Shaft ASM
2	125-7056	1	Shaft
4	125-7057	2	Support
5	125-7058	3	Support
6	125-7059	8	Washer
7	125-7061	4	Arm-Rocker
8	125-7013	4	Screw-Adjust, Valve
10	125-7014	4	Nut
11	125-7062	4	Arm-Rocker
12	125-7013	4	Screw-Adjust, Valve
14	125-7014	4	Nut
15	125-7593	1	Retainer
16	125-7228	3	Stud
17	125-6963	8	Seat-Bridge, Valve
18	125-7089	1	Cylinder Head ASM
24	125-7196	4	Plug
25	125-7240	2	Plug
26	125-7051	8	Valve
27	125-7052	8	Valve
28	125-7053	16	Spring
29	125-7054	16	Retainer
30	125-6914	32	Cotter
31	125-6915	8	Seal-Stem, Valve
32	125-6916	8	Seal-Stem, Valve
33	125-7104	8	Bridge ASM
35	125-7014	8	Nut
36	125-6965	8	Adjuster
37	125-7063	8	Guide
38	125-6921	4	Protector
39	125-6911	4	Seat-Valve
40	125-7064	4	Retainer
41	125-7119	4	Bolt
42	125-7184	2	Pin-Spring
43	93-0418	4	O-Ring
44	125-7215	3	Bolt
45	125-7220	7	Bolt
46	125-6972	1	Cover-Filler
47	125-7099	1	Bonnet ASM
48	125-7050	1	Plate
49	125-6920	1	Baffle
50	125-7012	1	Baffle
51	125-7118	1	Baffle-Breather
52	125-6959	1	Diaphragm
53	125-6960	1	Plate
54	125-6961	1	Plate-Breather
55	125-6962	1	Spring-Diaphragm
57	125-7060	1	Gasket
58	125-6982	1	Pipe
59	125-6994	1	Spring
60	125-6913	1	Plug
61	125-7186	4	Screw
62	125-7186	6	Screw
63	125-7186	1	Screw
64	125-6974	3	Knob
65	93-0418	3	O-Ring
66	125-7197	1	O-Ring
67	125-7086	1	Joint
68	125-7087	1	Hose ASM
69	125-7088	1	Hose
70	125-7040	2	Clip-Hose
71	125-7090	1	Hose
72	125-7190	2	Clamp-Hose
73	125-7046	1	Lifter
74	125-7111	1	Lifter
75	125-7214	4	Bolt
76	125-6917	16	Guide

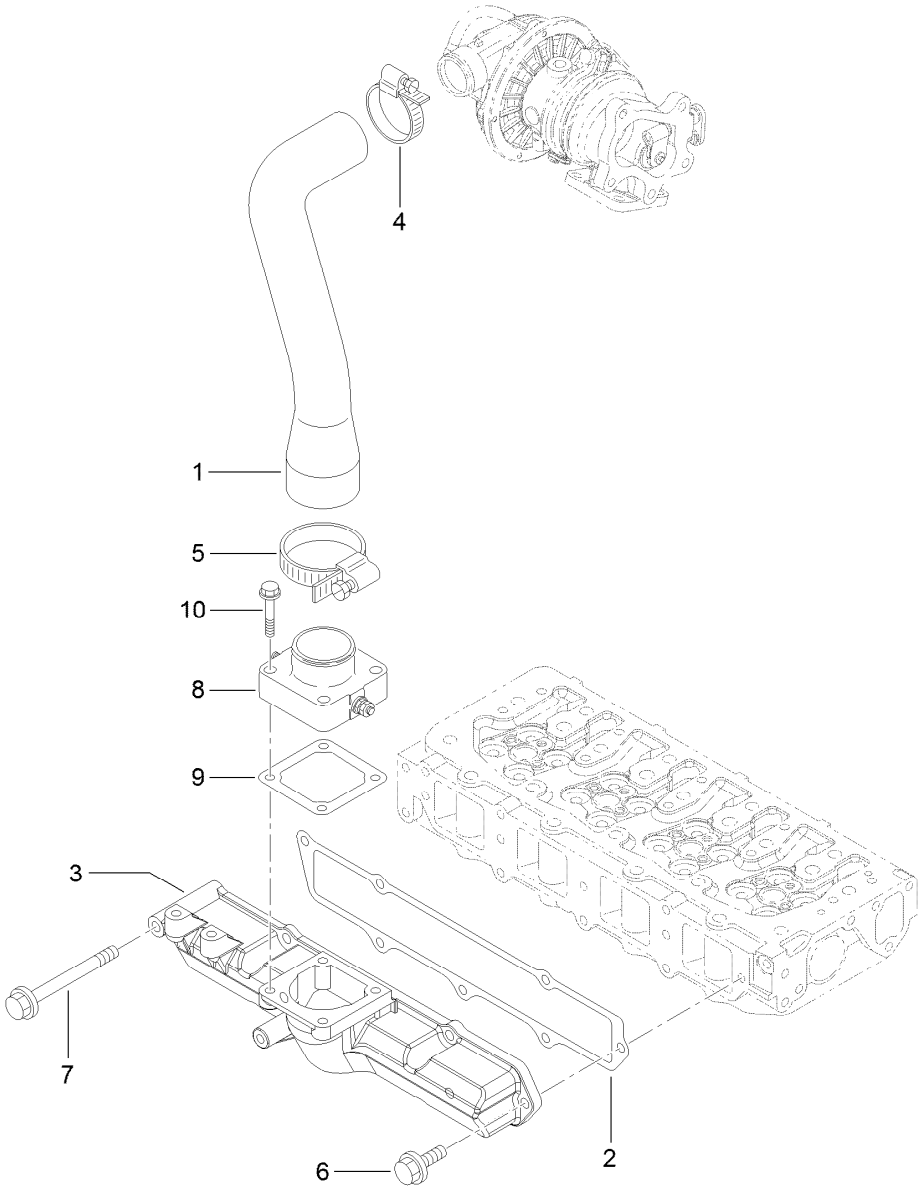

Suction Manifold Assembly

Ref.	*Part Number*	*Qty.*	*Description*
1	125-7065	1	Pipe
2	125-7066	1	Gasket
3	125-7067	1	Manifold-Intake
4	125-7189	1	Clamp-Hose
5	125-7190	1	Clamp-Hose
6	125-7595	6	Bolt
7	125-7223	1	Bolt
8	125-7002	1	Heater
9	125-7028	1	Gasket
10	125-7217	4	Bolt

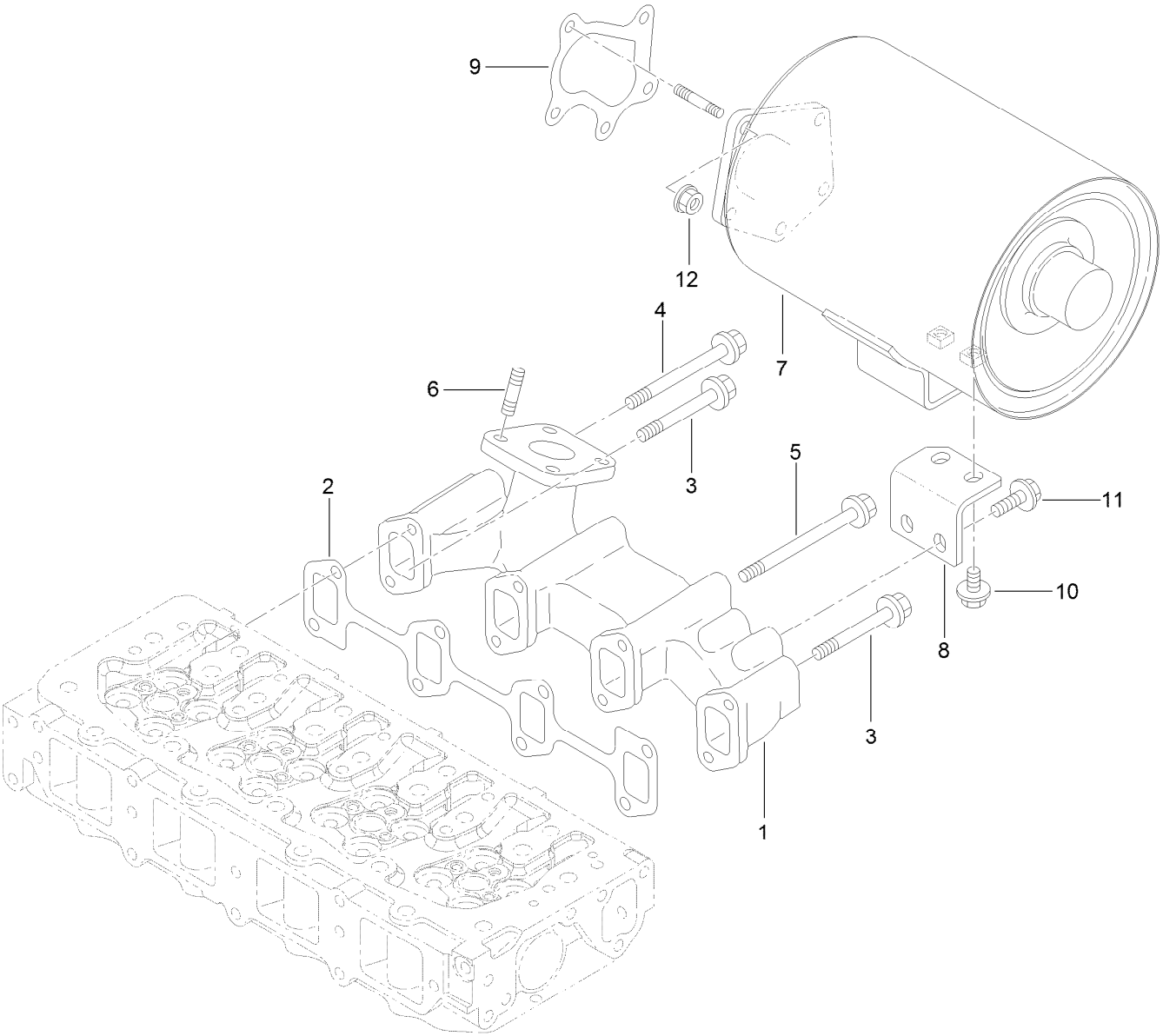

Exhaust Manifold and Silencer Assembly

Ref.	*Part Number*	*Qty.*	*Description*
1	125-7093	1	Manifold-Exhaust
2	125-7096	1	Gasket
3	125-6922	3	Bolt
4	125-6923	1	Bolt
5	125-6924	4	Bolt
6	125-6906	4	Stud
7	125-7094	1	Silencer
8	125-7095	1	Support-Silencer
9	125-7071	1	Gasket
10	125-7213	2	Bolt
11	125-7595	2	Bolt
12	125-7229	5	Nut

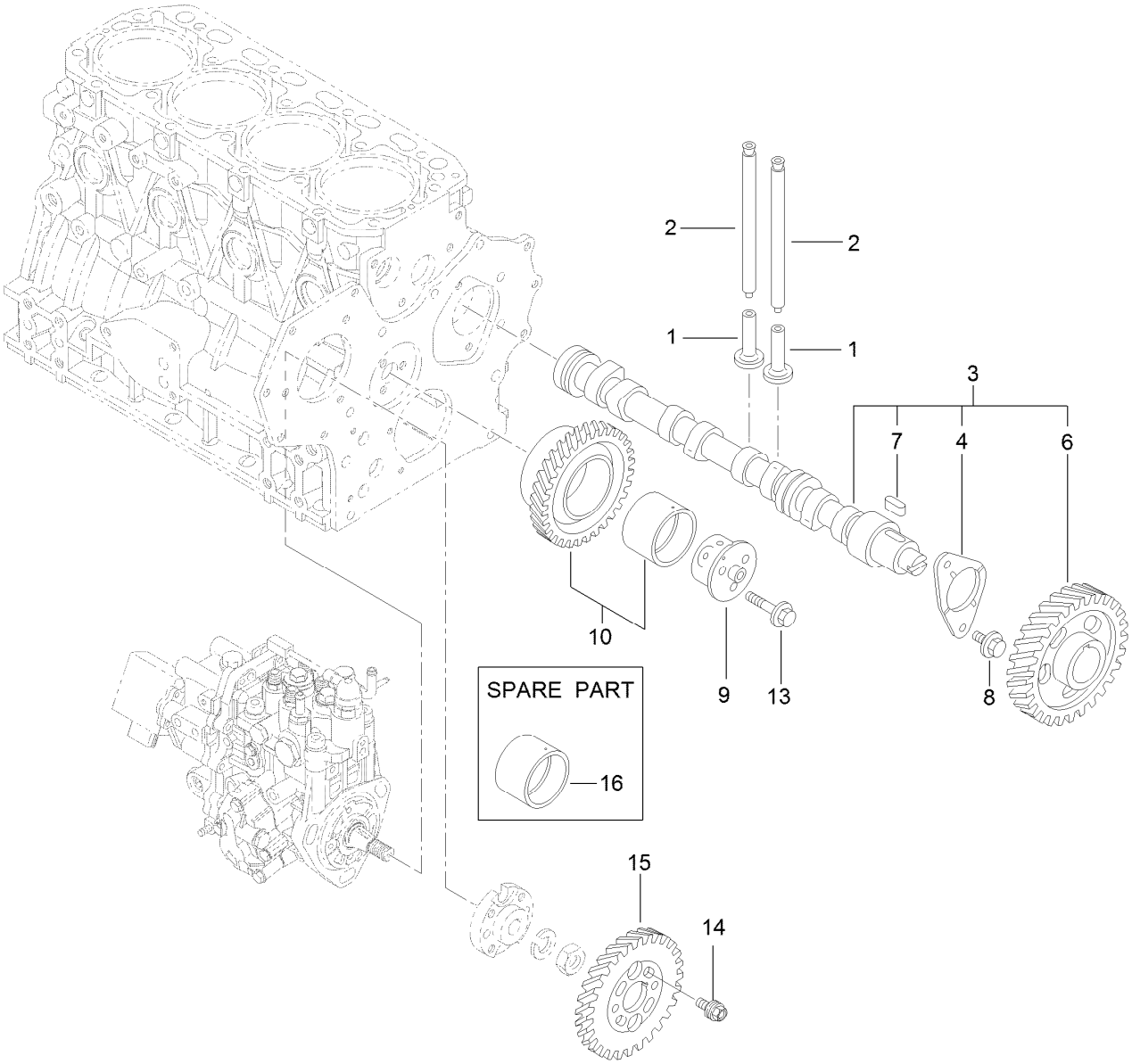

Camshaft and Driving Gear Assembly

Ref.	*Part Number*	*Qty.*	*Description*
1	125-7016	8	Tappet
2	125-7017	8	Rod-Push
3	125-7068	1	Camshaft ASM
4	125-7008	1	Metal-Thrust
6	125-7015	1	Gear
7	125-7185	1	Key
8	125-7213	2	Bolt
9	125-6938	1	Shaft
10	125-6928	1	Gear ASM
13	125-7218	3	Bolt
14	125-7020	4	Bolt
15	125-6929	1	Gear
16	125-6927	1	Bushing

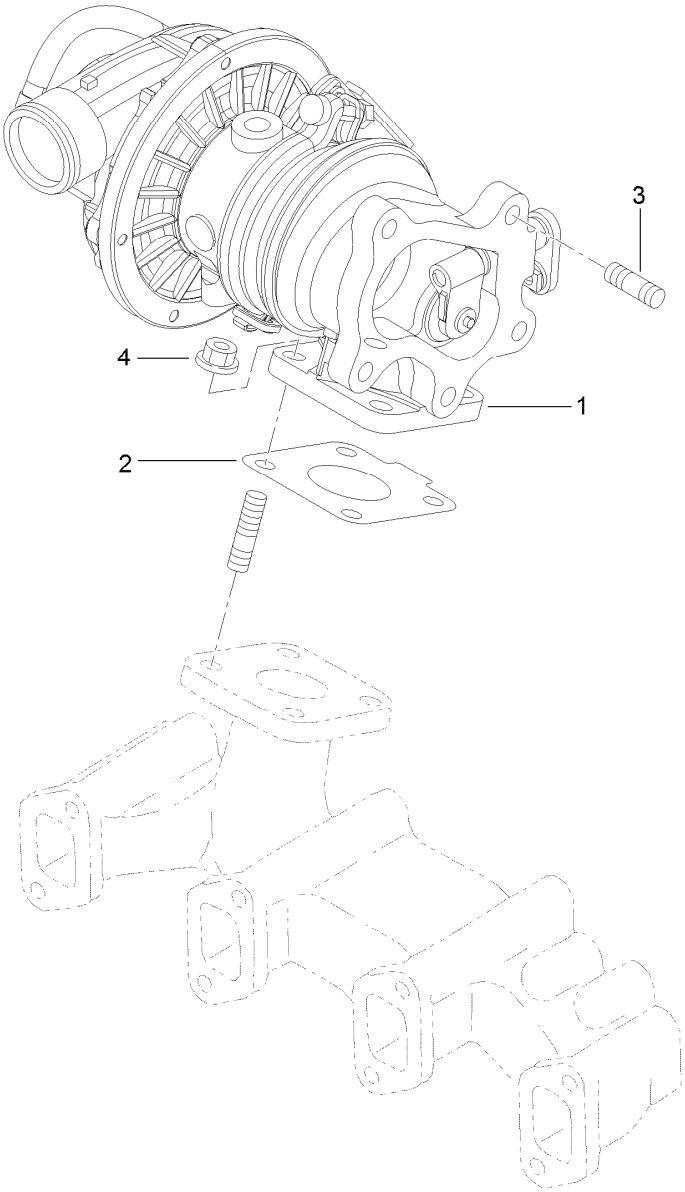

Turbine Assembly

Ref.	Part Number	Qty.	Description
1	125-7069	1	Turbine
2	125-7070	1	Gasket
3	125-7043	5	Stud
4	125-7229	4	Nut

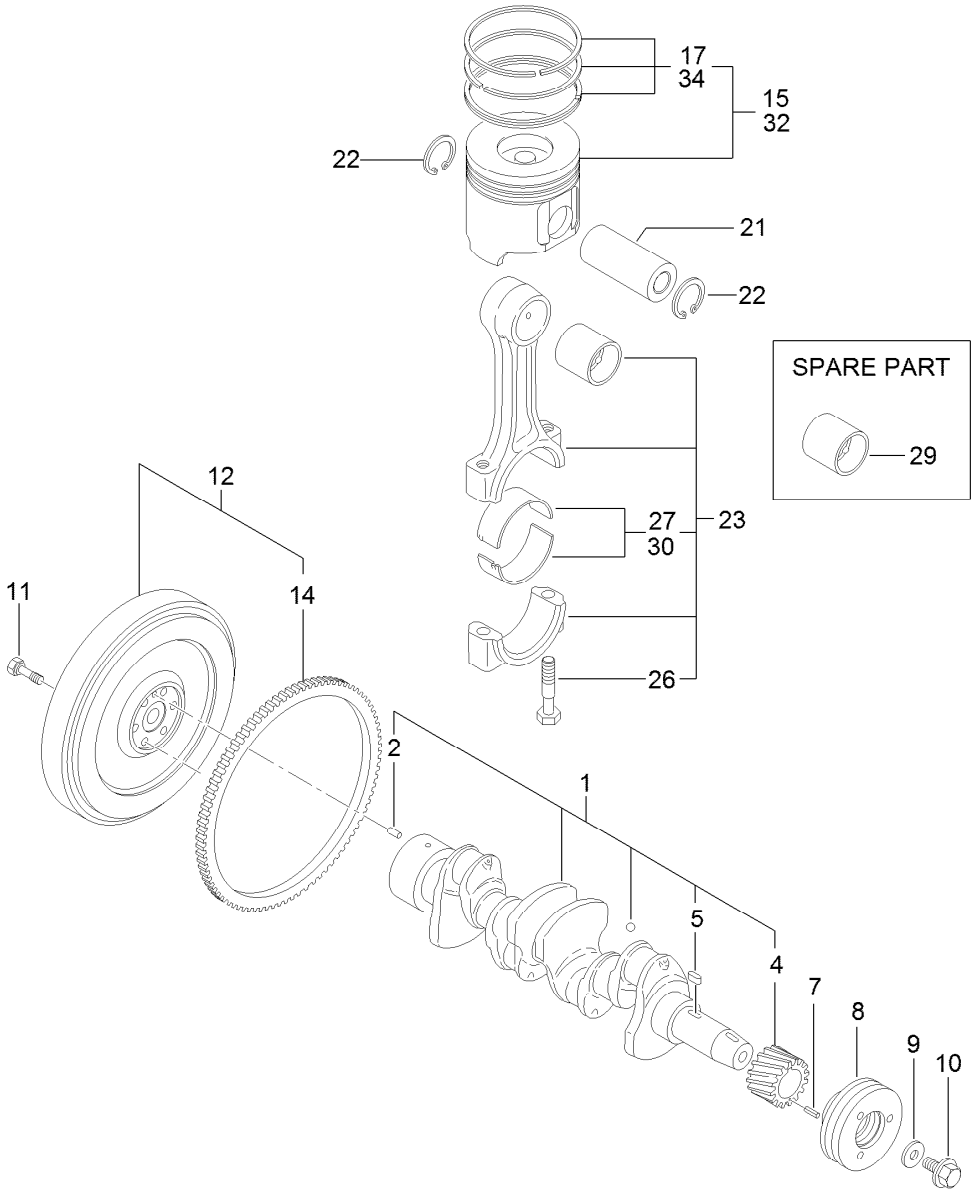

Crankshaft and Piston Assembly

Ref.	Part Number	Qty.	Description
1	125-7091	1	Crankshaft ASM
2	125-6995	1	Pin
4	125-6937	1	Gear
5	125-7185	1	Key
7	125-7182	1	Pin-Spring
8	125-6925	1	V-Pulley
9	125-7109	1	Washer
10	125-6956	1	Bolt
11	125-6951	6	Bolt
12	125-7172	1	Flywheel ASM
14	125-6943	1	Gear

Ref.	Part Number	Qty.	Description
15	125-7072	4	Piston ASM
17	125-6983	4	Piston Ring Set
21	125-7030	4	Pin
22	125-7180	8	Ring
23	125-7242	4	Connecting Rod ASM
26	125-6955	8	Bolt
27	125-7018	4	Pin-Crank
29	125-6997	4	Pin-Piston
30	125-7019	4	Pin-Crank (.25)
32	125-7073	4	Piston ASM (0.25 Os)
34	125-6985	4	Piston Ring Set (.25)

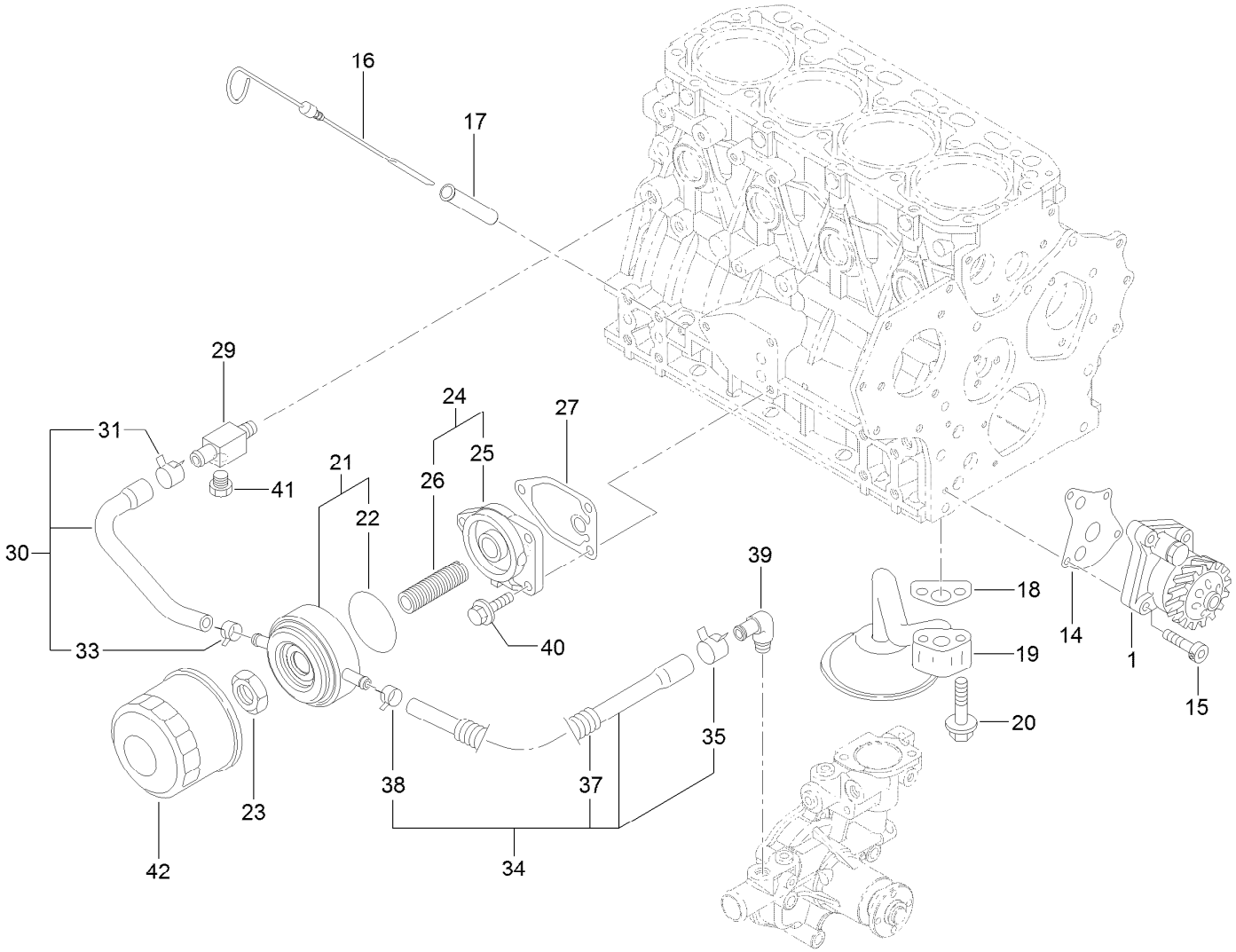

Lubrication and Oil System Assembly

Ref.	Part Number	Qty.	Description
1	125-7044	1	Oil Pump ASM
14	125-7021	1	Gasket
15	125-7232	4	Bolt
16	125-6987	1	Dipstick
17	125-6954	1	Guide-Dipstick
18	125-7022	1	Gasket
19	125-7023	1	Pipe ASM
20	125-7217	2	Bolt
21	125-7074	1	Cooler ASM
22	125-7075	1	O-Ring
23	125-7041	1	Nut-Cooler, Oil
24	125-6989	1	Bracket ASM
25	125-6930	1	Bracket
26	125-7042	1	Stud

Ref.	Part Number	Qty.	Description
27	125-7024	1	Gasket
29	125-6990	1	Joint
30	125-7078	1	Pipe ASM
31	125-7162	1	Clip
33	125-7191	1	Clamp-Hose
34	125-7079	1	Pipe ASM
35	125-7162	1	Clip
37	125-6946	1	Tube
38	125-7191	1	Clamp-Hose
39	125-7001	1	Elbow
40	125-7595	3	Bolt
41	125-7171	1	Plug-Drain
42	125-7025	1	Filter-Engine

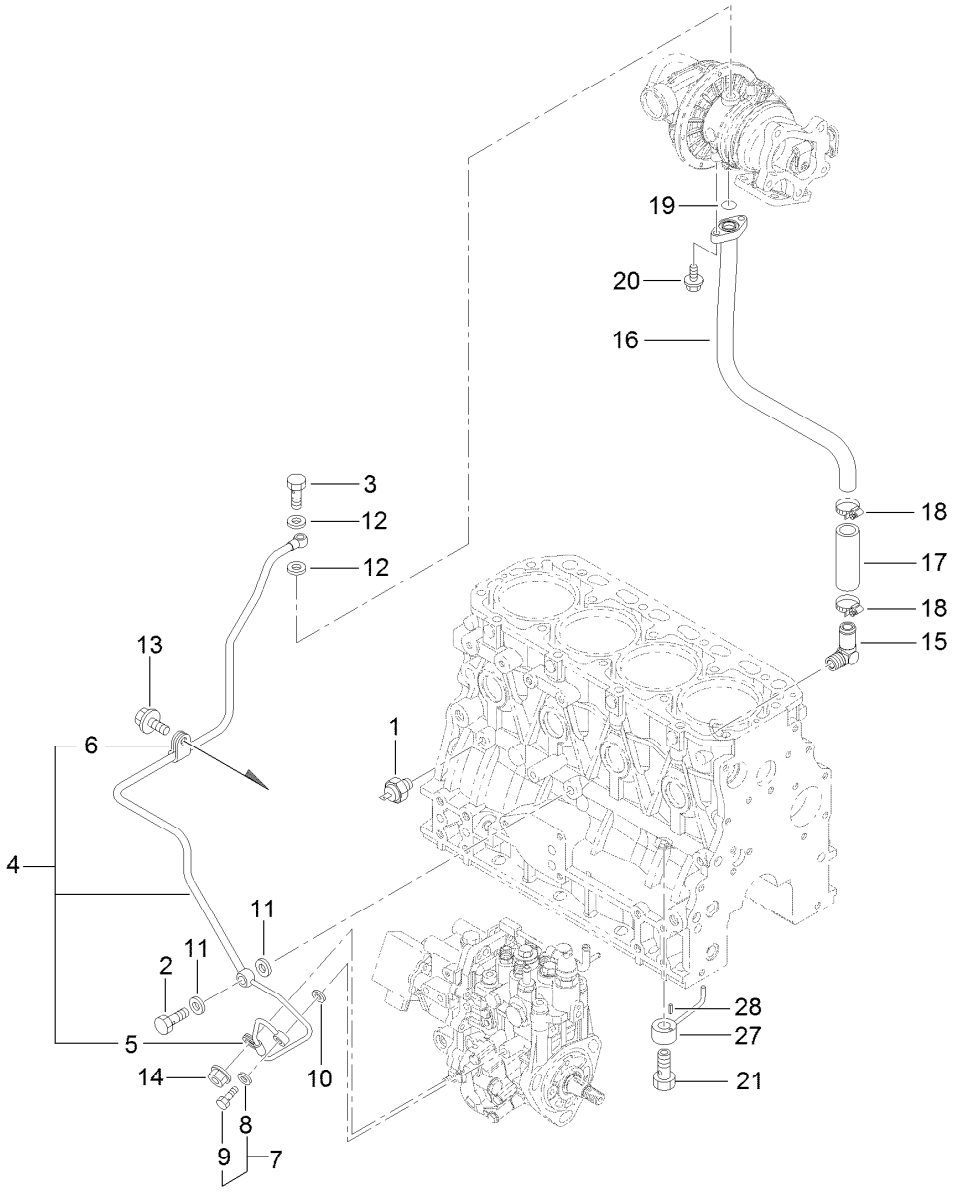

Lubrication Oil Line Assembly

Ref.	Part Number	Qty.	Description
1	125-6918	1	Switch-Oil
2	125-6975	1	Bolt-Joint, Pipe
3	125-6952	1	Bolt-Joint, Pipe
4	125-7076	1	Pipe ASM
5	125-6931	1	Retainer
6	125-6976	1	Retainer
7	125-6988	1	Joint Bolt ASM
8	125-7174	1	Washer-Seal
9	125-7194	1	Bolt-Joint
10	125-7174	1	Washer-Seal
11	125-7175	2	Washer-Seal
12	125-7193	2	Gasket

Ref.	Part Number	Qty.	Description
13	125-7212	1	Bolt
14	125-7231	1	Nut
15	125-6971	1	Elbow
16	125-7077	1	Pipe
17	125-6958	1	Hose
18	125-7188	2	Clamp-Hose
19	125-7198	1	O-Ring
20	125-7208	2	Bolt
21	125-7105	4	Check Valve ASM
27	125-7098	4	Nozzle
28	125-7182	4	Pin-Spring

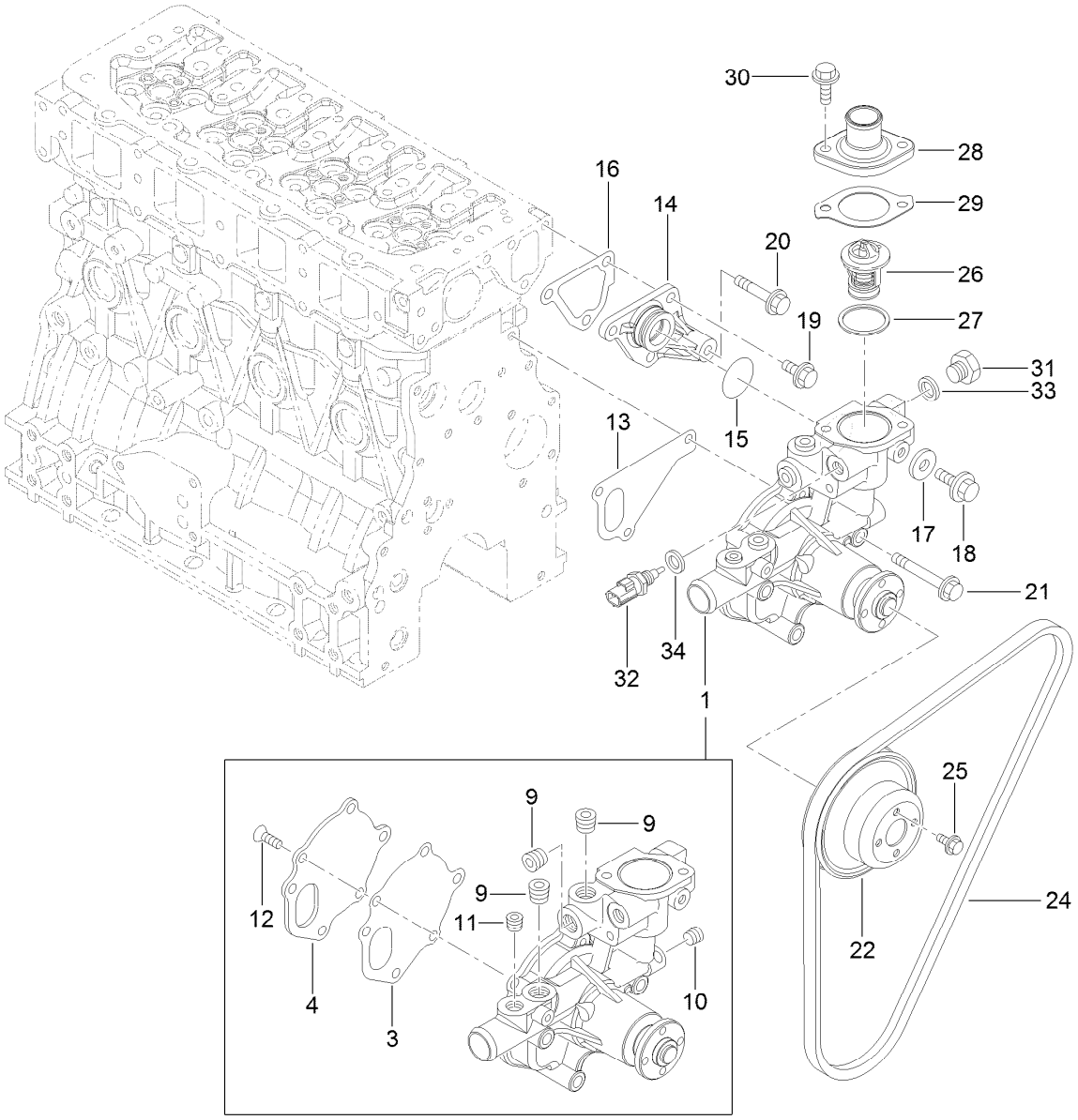

Cooling Water System Assembly

Ref.	Part Number	Qty.	Description
1	125-7031	1	CW Pump ASM
3	125-6998	1	Gasket
4	125-6999	1	Plate
9	125-7123	3	Plug
10	125-7195	1	Plug
11	125-7196	1	Plug
12	125-7234	3	Screw
13	125-7047	1	Gasket
14	125-6986	1	Joint
15	125-7048	1	O-Ring
16	125-6978	1	Gasket
17	125-7192	1	Gasket
18	125-7212	1	Bolt
19	125-7214	3	Bolt

Ref.	Part Number	Qty.	Description
20	125-7219	1	Bolt
21	125-7222	3	Bolt
22	125-7039	1	V-Pulley
24	125-7204	1	V-Belt
25	125-7206	4	Bolt
26	125-7029	1	Thermostat
27	125-7026	1	Gasket
28	125-7034	1	Cover
29	125-7110	1	Gasket
30	125-7594	2	Bolt
31	125-6953	1	Plug
32	125-7124	1	Sensor-Thermostat, CW
33	125-6979	1	Gasket
34	125-7176	1	Washer-Seal

Fuel Injection Pump Assembly

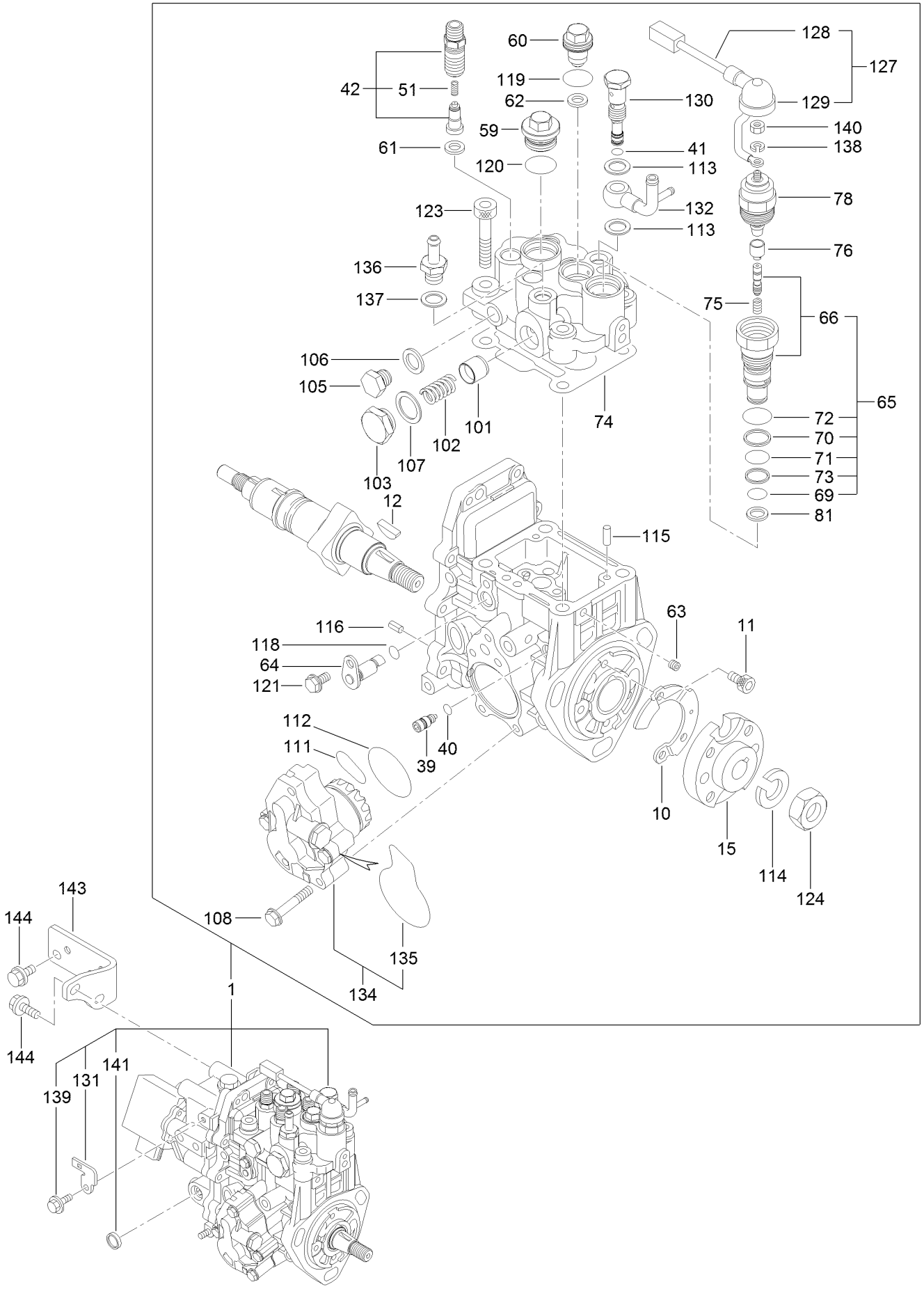

Fuel Injection Pump Assembly (continued)

Ref.	Part Number	Qty.	Description
1	125-7246	1	Fie ASM
10	125-6991	1	Cover
11	125-6992	2	Bolt
12	125-6932	1	Key
15	125-7135	1	Flange
39	125-7156	1	Stopper
40	125-7154	1	O-Ring
41	125-7154	1	O-Ring
42	125-7092	4	Valve ASM
51	125-7155	4	Spring
59	125-7157	1	Plug
60	125-6933	1	Plug
61	125-7136	4	Gasket
62	125-7136	1	Gasket
63	125-7151	1	Plug
64	125-7137	1	Lifter
65	125-7102	1	Timer Set
66	125-7103	1	Timer ASM
69	125-7145	1	O-Ring
70	125-6934	1	Ring
71	125-6935	1	O-Ring
72	125-7202	1	O-Ring
73	125-7203	1	Ring-Back Up
74	125-7138	1	Gasket
75	125-6940	1	Spring
76	125-6941	1	Cap
78	125-6942	1	Solenoid Valve ASM
81	125-7146	1	Gasket
101	125-7159	1	Piston
102	125-7140	1	Spring
103	125-7160	1	Plug
105	125-7148	1	Plug
106	125-7176	1	Washer-Seal
107	125-7591	1	Washer-Seal
108	125-7147	4	Bolt
111	125-7142	1	O-Ring
112	125-7143	1	O-Ring
113	125-7176	2	Washer-Seal
114	125-7179	1	Washer-Spring
115	125-7181	2	Pin-Parallel
116	125-7183	2	Pin-Spring
118	93-0400	1	O-Ring
119	125-7201	1	O-Ring
120	125-7202	1	O-Ring
121	125-7205	1	Bolt
123	125-7233	4	Bolt
124	125-7236	1	Nut
127	125-7125	1	Harness ASM
128	125-7126	1	Harness
129	125-7033	1	Cap
130	125-7158	1	Joint
131	125-7127	1	Bracket
132	125-7139	1	Joint
134	125-7141	1	Feed Pump ASM
135	125-7144	1	O-Ring
136	125-6945	1	Joint
137	125-7176	1	Washer-Seal
138	125-7178	1	Washer-Spring
139	125-7207	1	Bolt
140	125-7235	1	Nut
141	125-7238	1	Plug
143	125-7032	1	Retainer
144	125-7214	4	Bolt

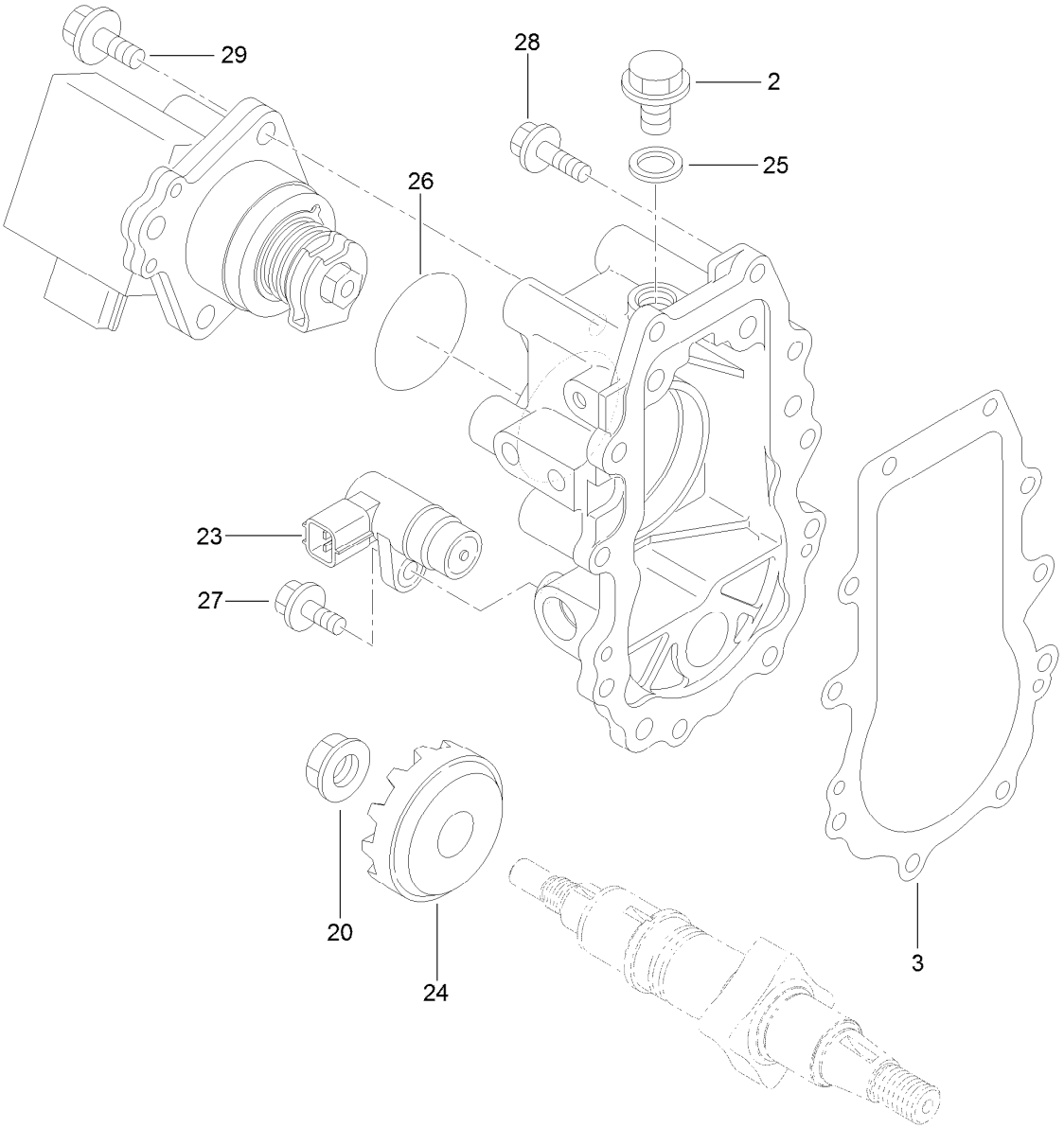

Governor Assembly

Ref.	Part Number	Qty.	Description
2	125-7148	1	Plug
3	125-7149	1	Gasket
20	125-6993	1	Nut
23	125-7152	1	Sensor
24	125-7150	1	Gear
25	125-7176	1	Washer-Seal
26	125-7200	1	O-Ring
27	125-7208	1	Bolt
28	125-7209	10	Bolt
29	125-7215	3	Bolt

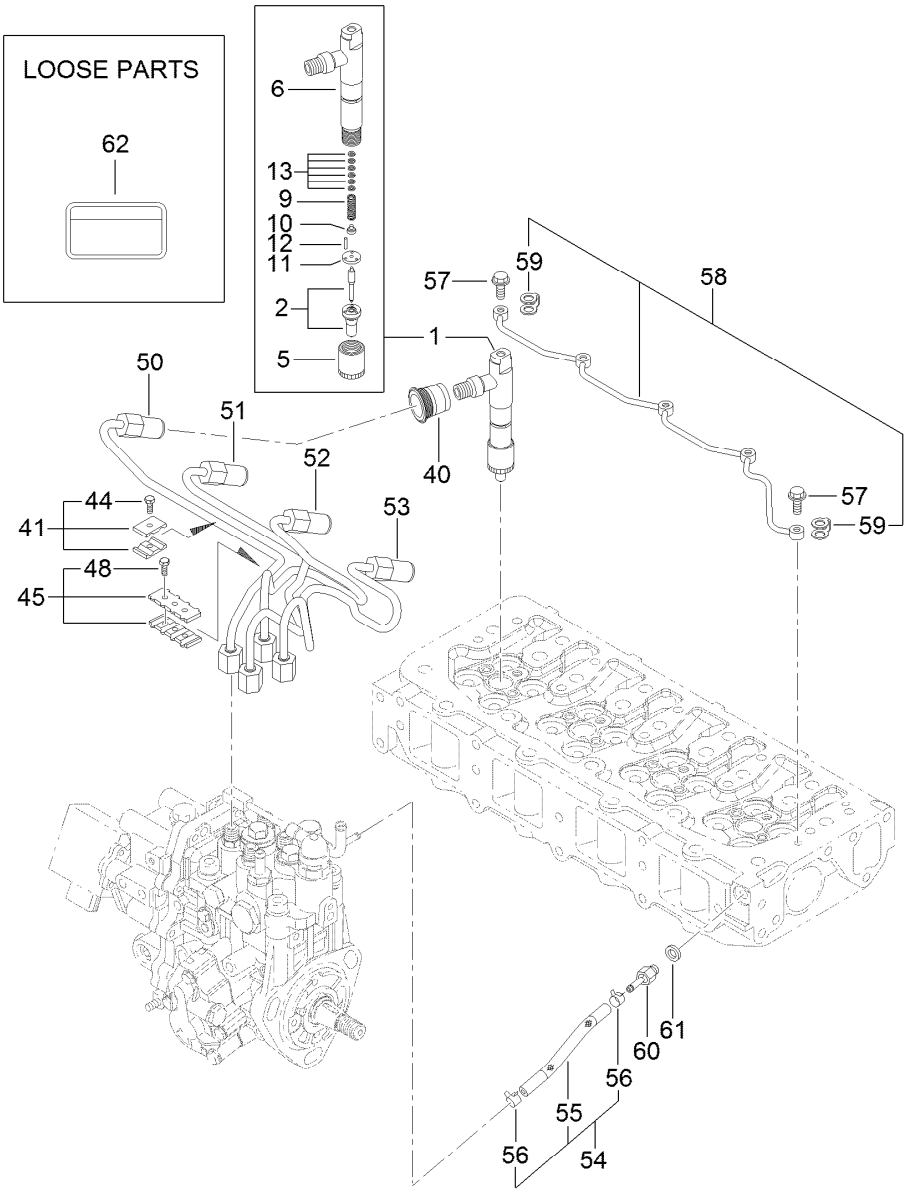

Fuel Injection Valve Assembly

Ref.	Part Number	Qty.	Description
1	125-7245	4	Injection Valve ASM
2	125-7133	4	Nozzle ASM
5	125-6901	4	Nut
6	125-7080	4	Holder ASM
9	125-6902	4	Spring
10	125-6903	4	Seat-Spring
11	125-6904	4	Plate
12	125-6905	8	Pin
13	125-6939	4	Shim Set
40	125-6964	4	Seal
41	125-6907	2	Retainer
44	125-7027	2	Bolt
45	125-7097	1	Retainer
48	125-7027	2	Bolt

Ref.	Part Number	Qty.	Description
50	125-7082	1	Injection Pipe ASM
51	125-7083	1	Injection Pipe ASM
52	125-7084	1	Injection Pipe ASM
53	125-7085	1	Injection Pipe ASM
54	125-6948	1	Pipe ASM
55	125-6949	1	Pipe
56	125-6970	2	Clip
57	125-6966	5	Bolt-Joint, Pipe
58	125-7081	1	Pipe ASM
59	125-6967	5	Gasket
60	125-6968	1	Joint
61	125-7174	1	Washer-Seal
62	125-6900	1	Label-Caution, Fuel Oil

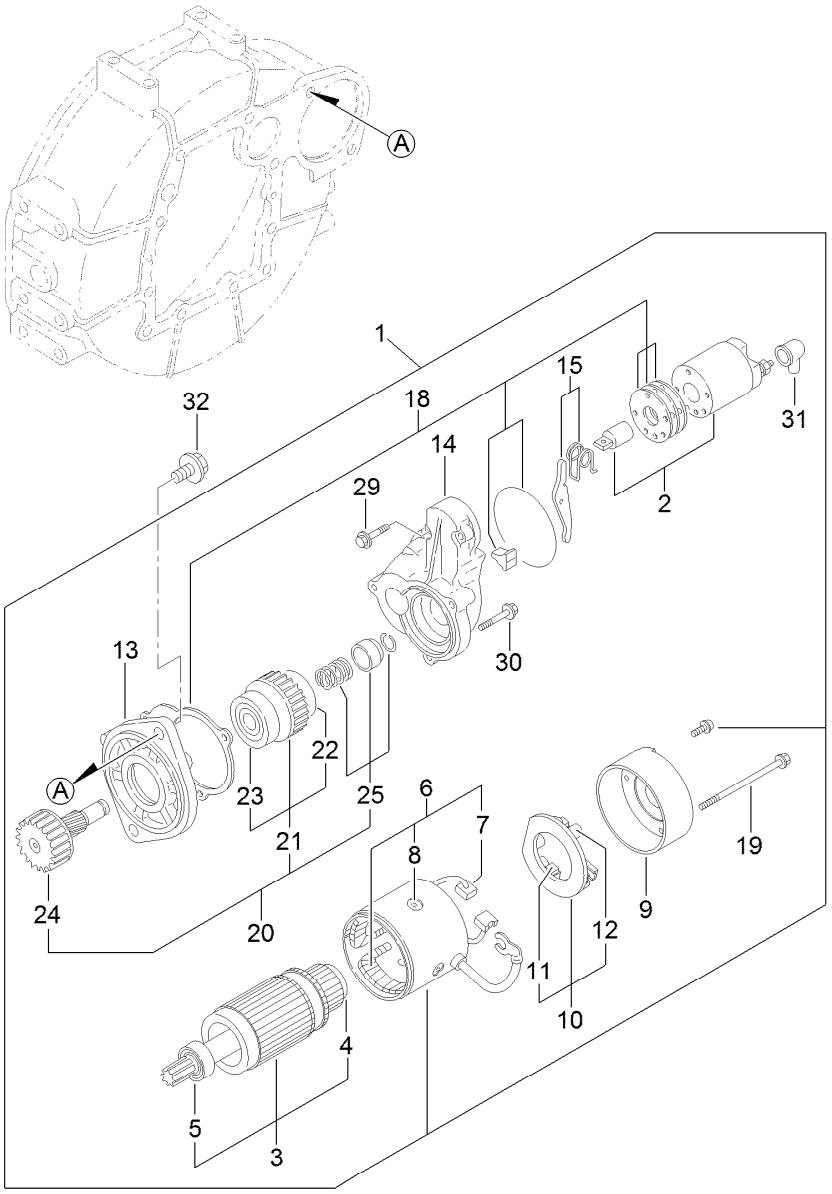

Starting Motor Assembly

Ref.	Part Number	Qty.	Description
1	125-7003	1	Starter
2	125-7004	1	Switch ASM
3	125-7112	1	Armature ASM
4	125-7252	1	Bearing-Ball
5	125-7249	1	Bearing, Ball
6	125-7113	1	Field Coil ASM
7	125-7114	2	Brush
8	125-7163	4	Screw
9	125-7115	1	Cover
10	125-7116	1	Brush Holder ASM
11	125-7114	2	Brush
12	125-7036	4	Spring
13	125-7164	1	Case-Gear
14	125-7005	1	Housing

Ref.	Part Number	Qty.	Description
15	125-7165	1	Lever Set
18	125-7037	1	Dust Cover ASM
19	125-7117	2	Bolt-Through
20	125-7166	1	Pinion ASM
21	125-7250	1	Clutch ASM
22	125-7251	1	Bearing-Ball
23	125-7253	1	Bearing-Ball
24	125-7167	1	Shaft
25	125-7168	1	Stopper Set
29	125-7210	2	Bolt
30	125-7211	3	Bolt
31	125-7169	1	Cover
32	125-7225	2	Bolt

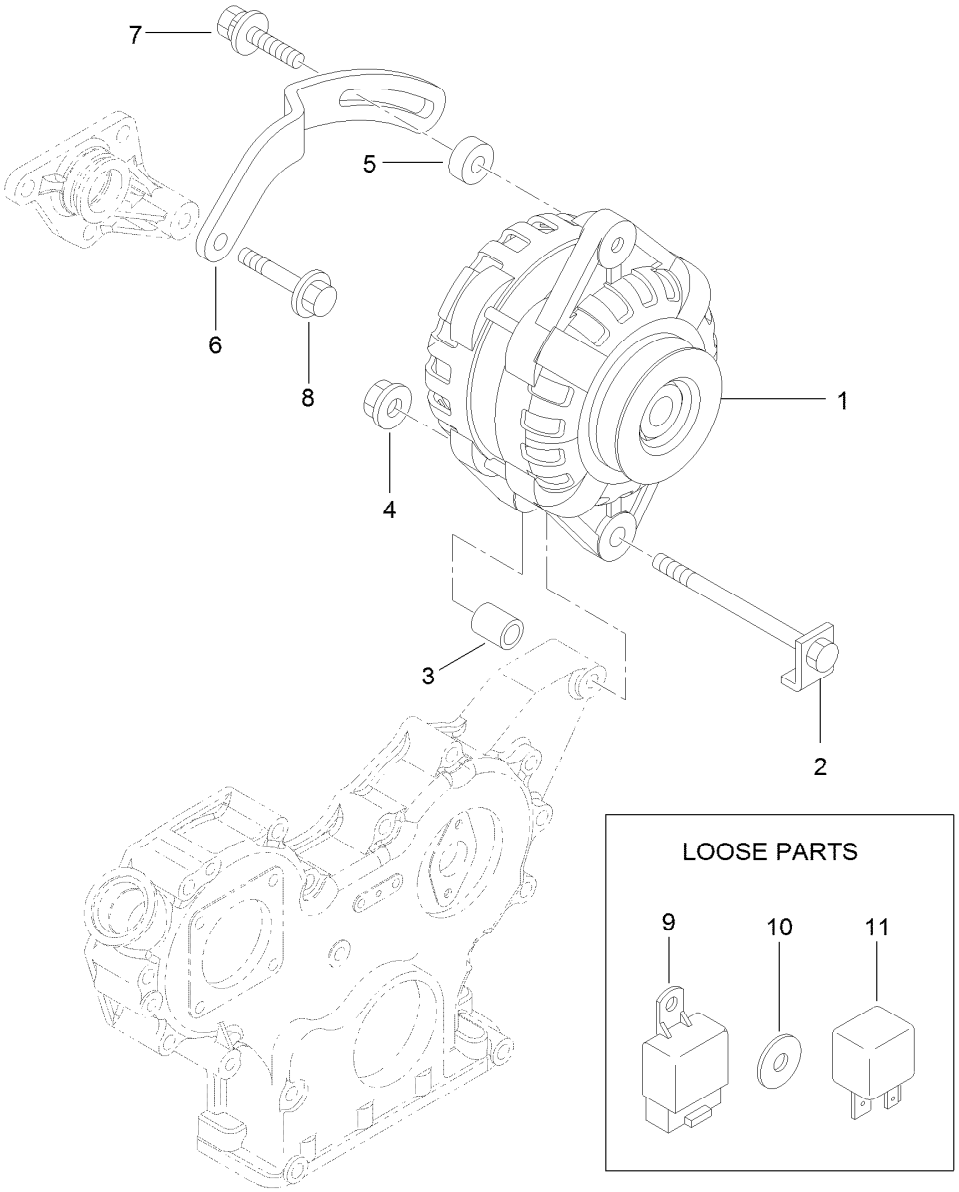

Generator Assembly

Ref.	Part Number	Qty.	Description
1	125-7120	1	Alternator-12V
2	125-7121	1	Bolt-Stopper
3	125-7122	1	Piece-Distance
4	125-7230	1	Nut
5	125-6947	1	Spacer
6	125-7101	1	Adjuster-Belt
7	125-7134	1	Bolt
8	125-7219	1	Bolt
9	125-7173	2	Relay
10	125-7131	3	Washer
11	125-7132	2	Relay

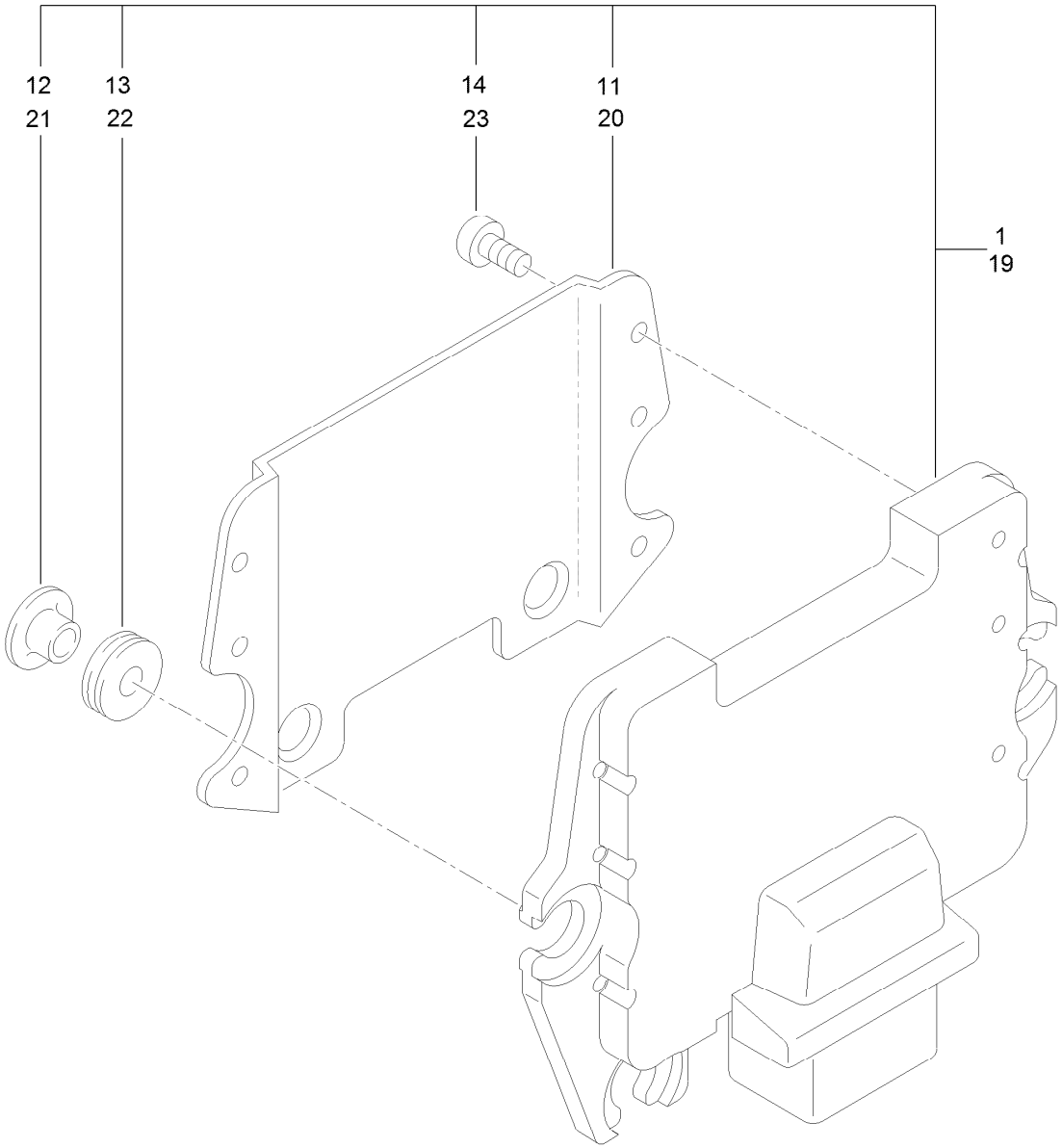

Electronic Control Unit Assembly

Ref.	*Part Number*	*Qty.*	*Description*
1	121-1591	1	Controller-Engine
11	125-7129	1	Shield
12	125-7130	3	Collar
13	125-6908	3	Absorber
14	125-7187	6	Screw
19	125-7128	1	Ecu
20	125-7129	1	Shield
21	125-7130	3	Collar
22	125-6908	3	Absorber
23	125-7187	6	Screw

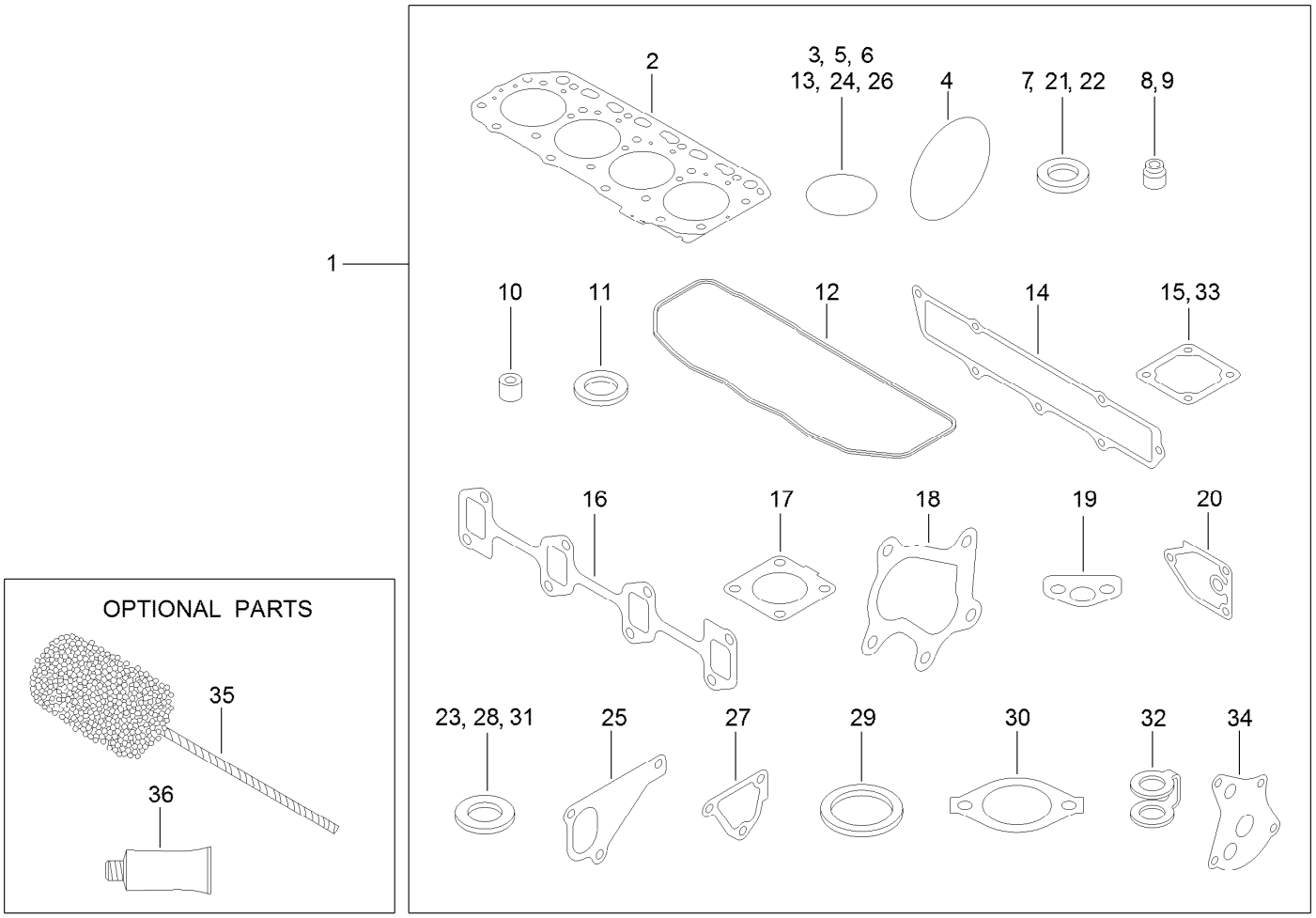

Gasket Set

Ref.	Part Number	Qty.	Description
1	125-7243	1	Gasket Set
2	125-7049	1	Gasket-Head
3	125-6909	2	O-Ring
4	125-6957	1	O-Ring
5	125-7197	2	O-Ring
6	125-7199	1	O-Ring
7	125-7177	1	Washer-Seal
8	125-6915	8	Seal-Stem, Valve
9	125-6916	8	Seal-Stem, Valve
10	125-6921	4	Protector
11	125-6911	4	Seat-Valve
12	125-7060	1	Gasket
13	93-0418	7	O-Ring
14	125-7066	1	Gasket
15	125-7028	1	Gasket
16	125-7096	1	Gasket
17	125-7070	1	Gasket
18	125-7071	1	Gasket

Ref.	Part Number	Qty.	Description
19	125-7022	1	Gasket
20	125-7024	1	Gasket
21	125-7174	7	Washer-Seal
22	125-7175	2	Washer-Seal
23	125-7193	2	Gasket
24	125-7198	1	O-Ring
25	125-7047	1	Gasket
26	125-7048	1	O-Ring
27	125-6978	1	Gasket
28	125-7192	1	Gasket
29	125-7026	1	Gasket
30	125-7110	1	Gasket
31	125-6979	2	Gasket
32	125-6967	5	Gasket
33	125-7000	1	Gasket
34	125-7021	1	Gasket
35	125-7038	1	Hone
36	125-7248	1	Gasket-Liquid

Attachments and Accessories

For 30604 Groundsmaster 4100 Rotary Mower

Product Name	Model/Part
Blade-Combination (19in)	106-7166-03
Blade-Atomic (19in)	107-0215-03
Premium All Season Hydraulic Fluid (55 Gallon Drum)	108-1177
Premium All Season Hydraulic Fluid (5 Gallon Pail)	108-1178
Atomic Blade Service Pack	108-1451
Blade-Flat Sail (19in)	110-6116-03
Flat Blade Service Pack (19in)	110-6140
Vinyl Backrest Extension Kit	119-7718
Large Seat Cover	120-5179
Premium Engine Oil 10w30 (55 Gal)	121-6392
Premium Engine Oil 10w30 (5 Gallon Pail)	121-6393
Premium Engine Oil 15w40 (55 Gallon Drum)	121-6394
Premium Engine Oil 15w40 (5 Gallon Pail)	121-6395
MVP Blade Kit	130-2660
MVP Filter Kit	30089
Universal Sunshade	30349
Flow Divider Kit	30407
North American Light Kit	30414
Leaf Mulcher Kit	30419
Replacement Cutting Unit	30451
CE Kit	30453
CE Light Kit	30660
Beacon Kit	30661
License Plate Kit	30664
Slow-Moving Vehicle Sign Kit	30665
8in Foam Filled Wheel ASM	93-5974

Notes:

Notes:

Notes:

TORO®

Count on it.