Form No. 3422-373 Rev A

Rail Update Kit for Greensmaster Flex 1820 Traction Unit with Universal Groomer

Trans Pro 100 Tow-Behind Trailer

Model No. 138-4966

Installation Instructions

Installation

Loose Parts

Use the chart below to verify that all parts have been shipped.

Description	Qty.	Use
Carriage bolt	8	Install the kit.
Spacer	8	
Lock bracket	2	
Right hex shaft	1	Load the machine.
Left hex shaft	1	

Note: Do not discard removed parts unless otherwise stated.

1. Remove the load ramps from the cross tubes of the tube assemblies.
2. Remove the tube assemblies from each side of the trailer.

   Note: You may discard the removed carriage bolts and spacers.
3. Install the tube assemblies with the 4 spacers between the tube assembly mounting brackets and the walls of the trailer using the 4 kit carriage bolts (Figure 1).

   Note: Position the tube assemblies so that the cross tubes are at the rear of the trailer.

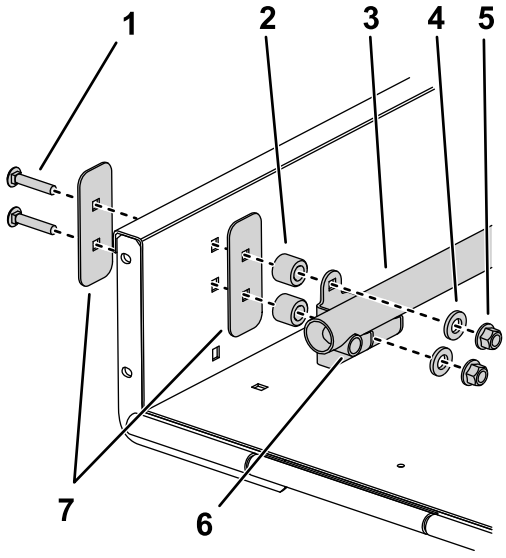

g251111

Figure 1

1. Kit carriage bolt
2. Kit spacer
3. Tube assembly
4. Washer
5. Nut
6. Cross tube
7. Stiffener plate

4. Remove the existing lock brackets from each side of the ramp.

   Note: You may discard the lock brackets.

© 2018—The Toro® Company
8111 Lyndale Avenue South
Bloomington, MN 55420

Register at www.Toro.com.

CE

Original Instructions (EN)
Printed in the USA
All Rights Reserved

3422-373 A

5. Install the load ramps, spacer, and hardware removed in step 1 to the cross tubes.

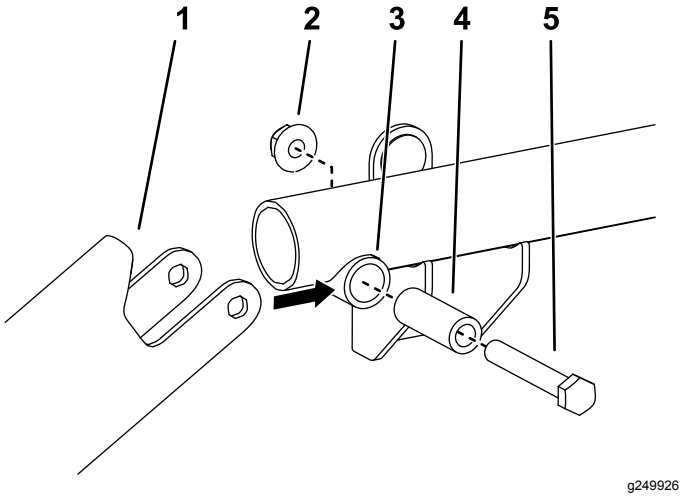

Figure 2

1. Load ramp
2. Nut
3. Cross tube
4. Cross-tube spacer
5. Bolt

6. Position the kit lock bracket onto each side of the ramp so they align with the underside of the load ramps, engage with the coated pins in the load ramps and align with the holes in the ramp (Figure 4). Use only 1 pair of mounting holes per lock bracket.
7. Loosely mount each lock bracket to the ramp with the 5/16 x 3/4 inch flange-head screws and flange nuts removed in step 4.

   Note: If the ramp handle interferes with the mounting fastener of the lock bracket, grind off the end of the handle to expose the hole, as required (Figure 3). Touch up the paint.

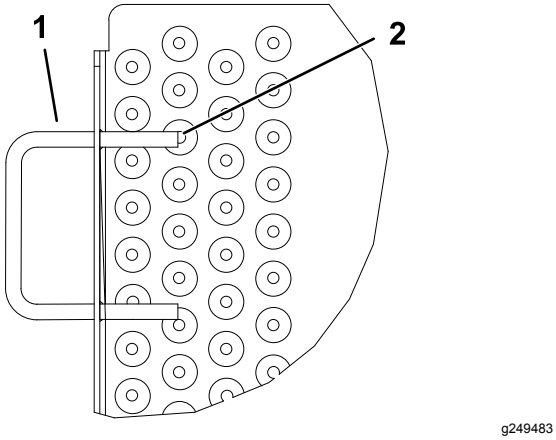

Figure 3

1. Ramp handle
2. Grind here

8. Raise and lock the ramp. Adjust the lock brackets so they are engaged on the pins and tighten the flange screws and nuts (Figure 3 and Figure 4).

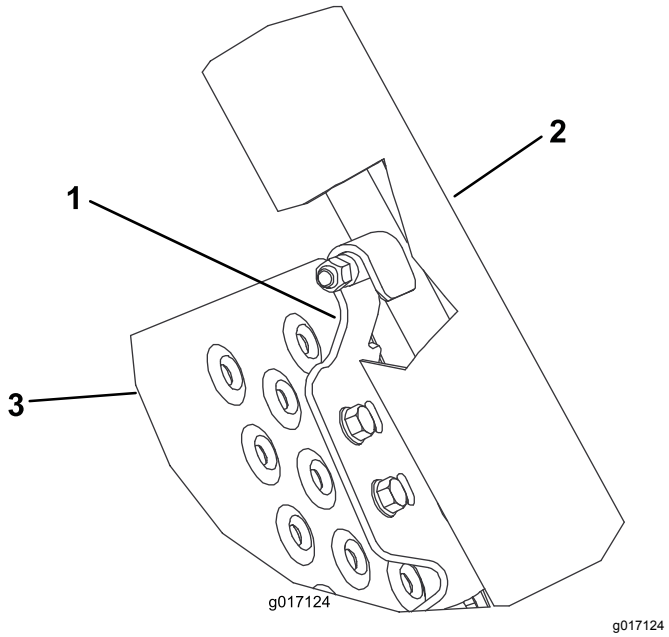

Figure 4

1. Lock bracket
2. Load ramps
3. Ramp

Installing the Rail Wheels

1. Shut off the engine, remove the key, and wait for all moving parts to stop before adjusting the machine.
2. Remove the rail wheels from both sides of the machine.
3. Secure the drum to prevent it from moving when loosening and tightening the hex shafts.
4. Remove the existing wheel shafts from both sides of the machine.

   Important: **The right side shaft has left-hand threads; rotate it clockwise to remove it.**

5. Install the right hex shaft (short) to the right side of the machine.

   Important: **The right hex shaft has left-hand threads; rotate it counterclockwise to install it.**

6. Install the left hex shaft (long) to the left side of the machine.

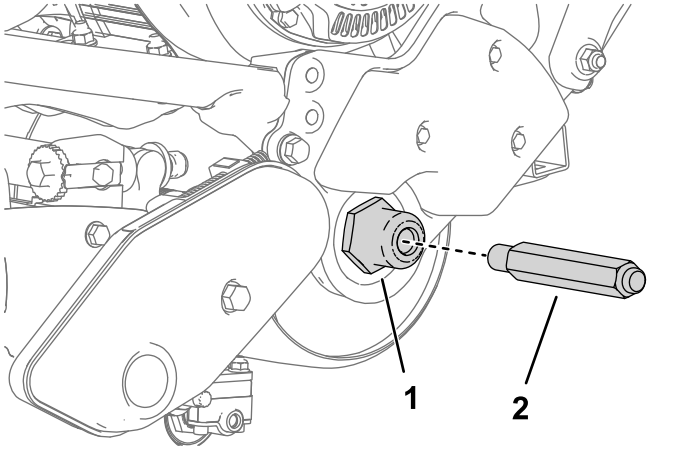

g249522

Figure 5

Left side shown

1. Thread the shaft into the side of the machine.
2. Left hex shaft

7. Insert a rail wheel onto each shaft and secure it with a wheel clip (Figure 6).

   Important: **Install the wheels with the channels facing away from the machine, contrary to the text instruction on the wheel.**

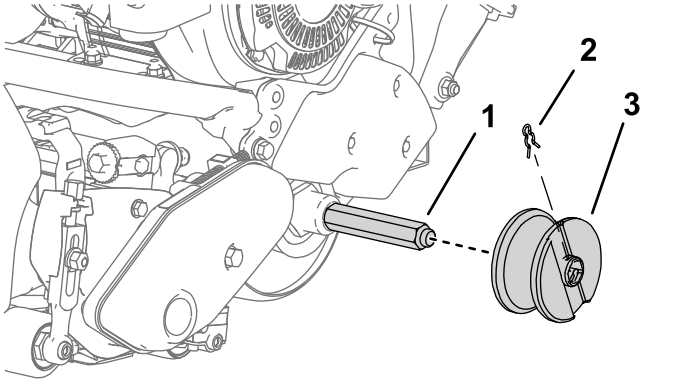

g249523

Figure 6

Left side shown

1. Kit wheel shaft
2. Wheel clip
3. Rail wheel (channel facing out)



Count on it.