Form No. 3405-112 Rev B

TORO®

Count on it.

Operator's Manual

MM-Series Mortar Mixer

Model No. 68013—Serial No. 314000001 and Up
Model No. 68014—Serial No. 314000001 and Up
Model No. 68016—Serial No. 314000001 and Up
Model No. 68017—Serial No. 314000001 and Up
Model No. 68020—Serial No. 314000001 and Up
Model No. 68021—Serial No. 314000001 and Up
Model No. 68024—Serial No. 314000001 and Up

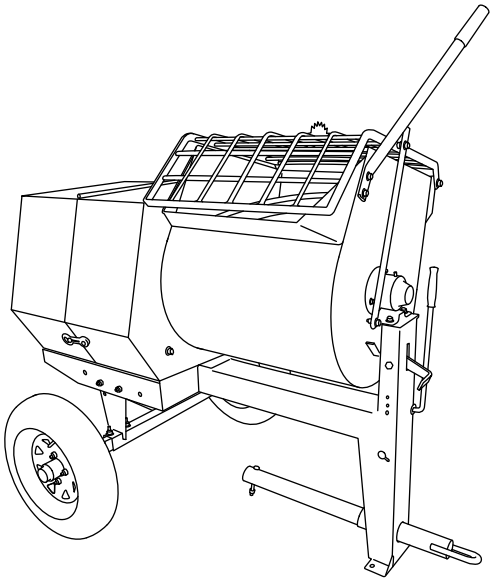

G019552

Register at www.Toro.com.
Original Instructions (EN)

3405-112 B

It is a violation of California Public Resource Code Section 4442 or 4443 to use or operate the engine on any forest-covered, brush-covered, or grass-covered land unless the engine is equipped with a spark arrester, as defined in Section 4442, maintained in effective working order or the engine is constructed, equipped, and maintained for the prevention of fire.

The enclosed engine owner's manual is supplied for information regarding the US Environmental Protection Agency (EPA) and the California Emission Control Regulation of emission systems, maintenance, and warranty. Replacements may be ordered through the engine manufacturer.

Tire Information—The DOT tire information is located on the side of each tire. This information gives load and speed ratings. Replacement tires should have the same or better ratings; refer to Specifications (page 16) to ensure that the tires on your machine meet or exceed the weight requirements of your machine.

⚠ WARNING

CALIFORNIA
Proposition 65 Warning

The engine exhaust from this product contains chemicals known to the State of California to cause cancer, birth defects, or other reproductive harm.

Use of this product may cause exposure to chemicals known to the State of California to cause cancer, birth defects, or other reproductive harm.

Introduction

This machine is designed to mix mortar, plaster, fireproofing material, grout, and other small-grained Portland cement products. A vehicle equipped with an appropriate pintle hitch or ball hitch can tow the machine.

Read this information carefully to learn how to operate and maintain your product properly and to avoid injury and product damage. You are responsible for operating the product properly and safely.

You may contact Toro directly at www.Toro.com for product safety and operation training materials, accessory information, help finding a dealer, or to register your product.

Whenever you need service, genuine Toro parts, or additional information, contact an Authorized Service Dealer or Toro Customer Service and have the model and serial numbers of your product ready. Figure 1 identifies the location of the model and serial numbers on the product. Write the numbers in the space provided.

Important: **With your mobile device, you can scan the QR code on the serial number decal (if equipped) to access warranty, parts, and other product information.**

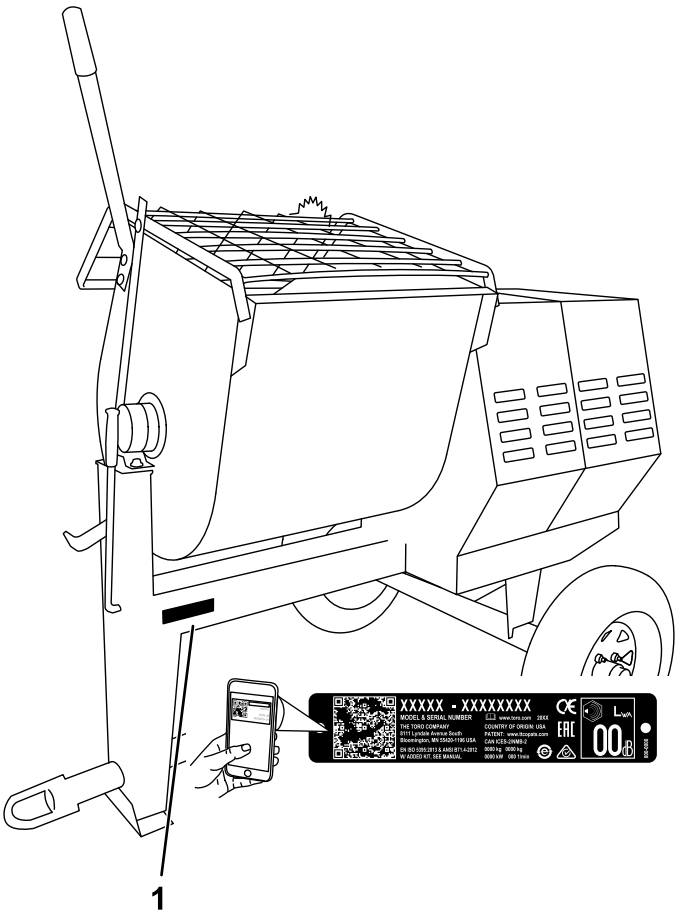

Figure 1

1. Model and serial number location

Model No. _____

Serial No. _____

© 2018—The Toro® Company
8111 Lyndale Avenue South
Bloomington, MN 55420

Contact us at www.Toro.com.
Printed in the USA
All Rights Reserved

This manual identifies potential hazards and has safety messages identified by the safety-alert symbol (Figure 2), which signals a hazard that may cause serious injury or death if you do not follow the recommended precautions.

g000502

Figure 2

Safety-alert symbol

This manual uses 2 words to highlight information. **Important** calls attention to special mechanical information and **Note** emphasizes general information worthy of special attention.

Contents

Safety 4
Safe Operating Practices 4
Safety and Instructional Decals 7
Setup 10
1 Installing the Dump Handle 10
2 Installing the Tow Pole 11
3 Installing the Safety Chain 12
Product Overview 13
Controls 14
Engine Controls 15
Specifications 16
Operation 17
Think Safety First 17
Towing the Machine 17
Adjusting the Axle Width 20
Preparing to Use the Machine 21
Opening the Cowl 21
Closing the Cowl 22
Adding Fuel 22
Performing Daily Maintenance 24
Starting the Engine 24
Shutting Off the Engine 24
Mixing the Material 25
Dumping the Material 26
Cleaning the Drum 26
Maintenance 27
Recommended Maintenance Schedule(s) 27
Pre-Maintenance Procedures 28
Preparing the Machine for Maintenance 28
Disconnecting the Spark-Plug Wire 28
Removing the Divider Plate 28
Installing the Divider Plate 28
Lubrication 29
Lubricating the Bearings and Seals 29
Engine Maintenance 30
Servicing the Air Cleaner 30
Servicing the Engine Oil 31
Servicing the Spark Plug 33
Cleaning the Spark Arrester 34
Removing and Installing the Engine 35
Fuel System Maintenance 36
Cleaning the Fuel-Sediment Cup 36
Draining the Fuel Tank 37
Drive System Maintenance 37
Tire Air Pressure 37
Inspecting the Tires 37
Torquing the Wheel Lug Nuts 38
Servicing the Reduction Case 38
Servicing the Gearbox 40
Belt Maintenance 42
Inspecting the Belts 42
Adjusting the Belt Tension 42
Replacing the Belts 43
Aligning the Pulleys 45
Paddle Maintenance 46
Adjusting the Paddle Blades 46
Cleaning 47
Cleaning the Machine 47
Storage 48
Troubleshooting 49

Safety

Improper use or maintenance by the operator or owner can result in injury. To reduce the potential for injury, comply with these safety instructions and always pay attention to the safety-alert symbol (Figure 2), which means: **Caution**, **Warning**, or **Danger**—personal safety instruction. Failure to comply with the instruction may result in personal injury or death.

Safe Operating Practices

This product is capable of amputating hands. Always follow all safety instructions to avoid serious injury or death.

⚠ WARNING

Machining or handling stone, masonry, concrete, metal, and other materials can generate dust, mists, and fumes containing chemicals, such as silica, known to cause serious or fatal injury or illness, such as respiratory disease, silicosis, cancer, birth defects, or other reproductive harm.

- **Control dust, mist, and fumes at the source where possible. Use water for dust suppression whenever possible.**
- **Use good work practices and follow the recommendations of the manufacturer or suppliers, OSHA, and other occupational and trade associations.**
- **Always follow respiratory precautions.**
- **When you cannot eliminate the hazards from inhalation, you and all bystanders should wear a respirator approved by OSHA for the material that you are handling.**

⚠ WARNING

Engine exhaust contains carbon monoxide, which is lethal if inhaled.

Do not run the engine indoors or in an enclosed area.

Training

- Park the machine on a level surface, shut off the engine, wait for all moving parts to stop, and allow the machine to cool before adjusting, cleaning, storing, or repairing the machine.
- Read and understand the contents of this *Operator's Manual* before you start the engine. Ensure that everyone using this product knows how to use it and understands the warnings.
- Become familiar with the safe operation of the equipment, operator controls, and safety signs.
- All operators and mechanics should be trained. The owner is responsible for training them.
- Never let children or untrained people operate or service the equipment. Local regulations may restrict the age of the operator.
- The owner/user can prevent and is responsible for accidents or injuries to people or damage to property.

Towing

- Check with your local county or state towing safety regulations before towing the machine.
- To reduce the possibility of an accident while transporting the machine on public roads, ensure that the towing vehicle is mechanically sound and in good operating condition.
- Shut off the engine before transporting the machine.
- When towing with a ball hitch, ensure that it is the proper size for the hitch coupler on the machine.
- When towing with a pintle hitch, ensure that the eye of the tow pole is the correct dimension for the pintle hook.
- Inspect the hitch and coupling for wear. Do not tow the machine with damaged or worn hitches, couplings, chains, or other components.
- Check the air pressure of the tires on the towing vehicle and adjust the pressure as needed.
- Check the tire tread and sidewall for damage and wear and replace the tire if necessary.
- Properly attach the safety chains to the towing vehicle by crossing the chains and removing any extra slack.
- Ensure that the directional and brake lights are working properly (if equipped).
- Ensure that the directional, backup, and brake lights of the tow vehicle are working properly (if equipped).
- Before towing, ensure that your machine is correctly and securely attached to the towing vehicle.
- Ensure that the safety chains are properly secured to the vehicle, and leave enough slack for turning.

- Do not carry any material in the machine when towing.
- Avoid sudden stops and starts. This can cause skidding or jackknifing. Smooth, gradual starts and stops improves towing.
- Avoid sharp turns to prevent rolling. Tow only with a vehicle that has a hitch designed for towing. Do not attach towed equipment except at the hitch point.
- Do not tow the machine faster than 88 km/h (55 mph).
- Use caution when backing up; use a spotter outside the vehicle to guide you.
- Do not allow anyone to sit or ride on the machine.
- Disconnect the machine from the tow vehicle before using it.
- Place chocks underneath the tires to prevent them from rolling while the machine is parked.

Preparation

Become familiar with the safe operation of the equipment, operator controls, and safety signs.

- Use only accessories and attachments approved by the manufacturer.
- Wear personal protective equipment and appropriate clothing including:
  - Hard hat
  - Respirator or dust mask
  - Face shield
  - Safety glasses
  - Hearing protection
  - Safety shoes
  - Long pants
  - Shirt with long sleeves that are tight at the wrists
  - Tight-fitting gloves without drawstrings or loose cuffs
- Wear appropriate clothing, including eye protection; long pants; substantial, slip-resistant footwear; and hearing protection. Tie back long hair and do not wear loose jewelry.
- Ensure that the machine is on a level surface before operating it.
- Chock the tires of the machine to prevent unintended movement.
- Before every use, do the following:
  - Inspect the coupler, ball, and hitch.
  - Ensure that all lights are functioning properly (if equipped).
  - Ensure that the tires are properly inflated.
  - Ensure that the lug nuts are tight and torqued properly.
  - Ensure that the machine is properly secured.

Fuel Safety

- Use extreme care in handling fuel. It is flammable and its vapors are explosive.
- Extinguish all cigarettes, cigars, pipes, and other sources of ignition.
- Use only an approved fuel container.
- Do not remove the fuel cap or fill the fuel tank while the engine is running or hot.
- Do not add or drain fuel in an enclosed space.
- Do not store the machine or fuel container where there is an open flame, spark, or pilot light, such as on a water heater or other appliance.
- If you spill fuel, do not attempt to start the engine; avoid creating any source of ignition until the fuel vapors have dissipated.

Operation

- Use your full attention while operating the machine. Do not engage in any activity that causes distractions; otherwise, injury or property damage may occur.
- Do not run an engine in an enclosed or poorly ventilated area.
- Operate the machine only in good lighting conditions.
- Before starting the machine, ensure that there are no people or obstacles near or under the machine.
- Shut off the engine before leaving the machine for any reason.

  Never leave a running machine unattended. Always shut off the engine and verify that all moving parts have stopped.
- Chock the tires of the machine or keep it attached to the towing vehicle when it is not in use.
- Keep your hands away from any moving parts. Keep your feet away from the tires and the front post.
- Do not operate the machine under the influence of alcohol or drugs.
- Do not place your hands or any solid object into the drum when the machine is in operation.
- Do not touch parts that may be hot from operation. Allow them to cool before attempting to maintain, adjust, or service the machine.
- Never move the machine while the engine is running.
- Keep the cowl closed and latched during operation.

- Ensure that all the guards and shields are securely in place before operating the machine.
- If the mixing paddles strike an object or if the machine starts making an unusual noise or vibration, shut off the engine, wait for all moving parts to stop, and empty the drum. Inspect for clogging or damage. Clean, repair, and/or replace any damaged parts.
- Do not change the engine governor setting or overspeed the engine.
- Do not operate the machine when there is the risk of lightning.

Maintenance and Storage

- Before performing maintenance, do the following:
  - Park the machine on a level surface.
  - Shut off the engine and wait for all movement to stop before adjusting, cleaning, or repairing the machine.
  - Let the engine cool before performing maintenance or storing the machine.
  - Disengage all power and operation controls.
- Never lubricate, service, repair, or adjust the machine with the engine running.
- Keep equipment materials clear from the muffler and engine to prevent fires. Clean up oil or fuel spills.
- Never allow untrained personnel to service the machine.
- Keep your hands, feet, and clothing away from moving parts. If possible, do not make adjustments with the engine running.
- Keep all parts in good working condition and all fasteners tightened. Replace all worn or damaged decals.
- Remove any buildup of grease, oil, or debris from the machine.
- Stop and inspect the machine if an object enters the drum or causes another obstruction. Make all necessary repairs before starting the machine.
- Do not tamper with safety devices.
- Chock the tires when storing the machine.
- Keep all fasteners and hose clamps securely tightened and all equipment in good condition.
- Use only genuine Toro replacement parts.

Safety and Instructional Decals

Safety decals and instructions are easily visible to the operator and are located near any area of potential danger. Replace any decal that is damaged or lost.

decal125-4939

125-4939

1. Warning—read the *Operator's Manual*.
2. Hand and arm entanglement at the belt drive; crushing hazard of hand; entanglement hazard of hand at the shaft—keep your hands away from moving parts; keep all guards and shields in place.
3. Entanglement hazard at paddles—shut off the engine and wait for all moving parts to stop before performing maintenance.
4. Toxic gas inhalation hazard—Do not run the engine in an enclosed space.
5. Explosion hazard—shut off the engine and keep away from flames when refueling.

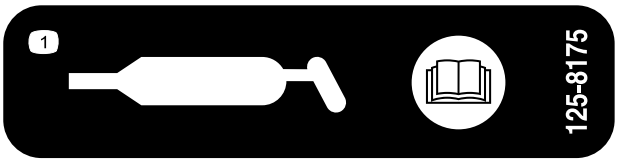

decal125-8175

125-8175

1. Read the *Operator's Manual* for information on greasing the machine.

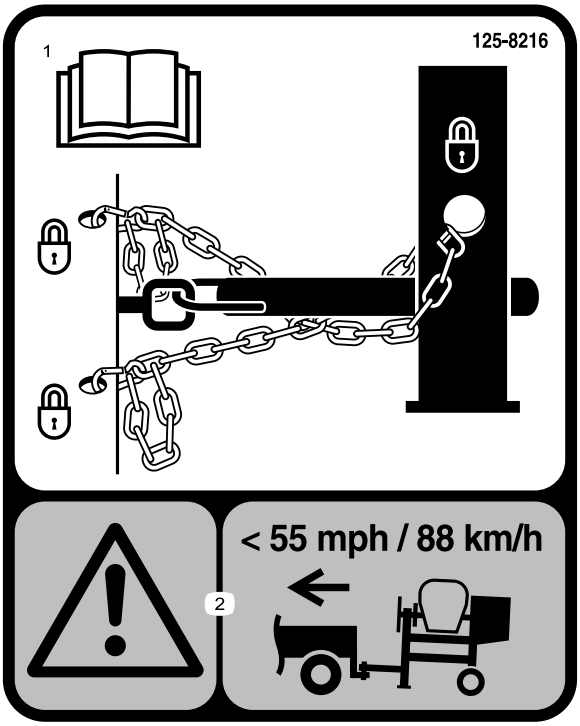

decal125-8216

125-8216

1. Read the *Operator's Manual* for information on how to tow the machine.
2. Warning—limit towing speed to less than 88 km/h (55 mph).

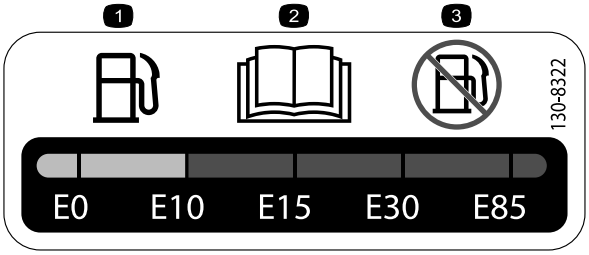

decal130-8322

130-8322

1. Use fuel with an alcohol content by volume under 10% only.
2. Read the *Operator's Manual* for more information on fuel.
3. Do not use fuel with an alcohol content greater than 10% by volume.

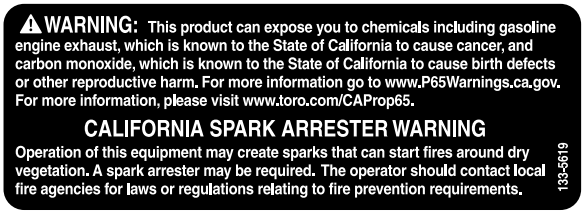

decal133-5619

133-5619

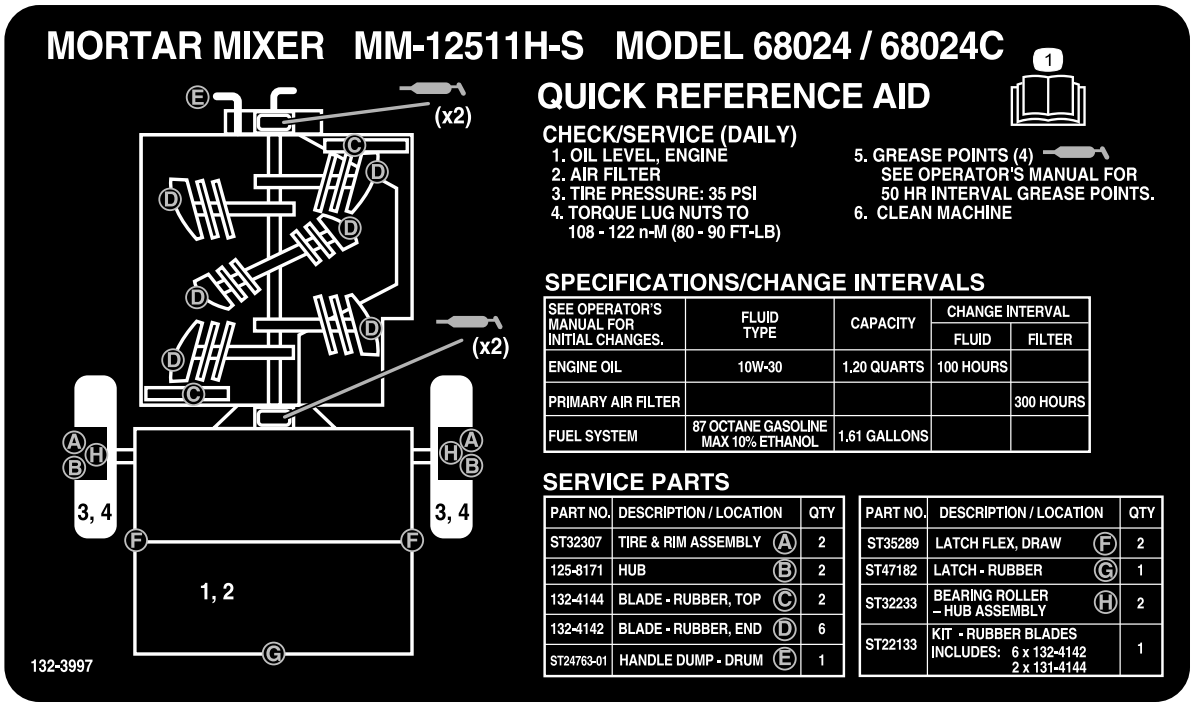

decal132-3997

132-3997

1. Read the *Operator's Manual* for more information on servicing the machine.

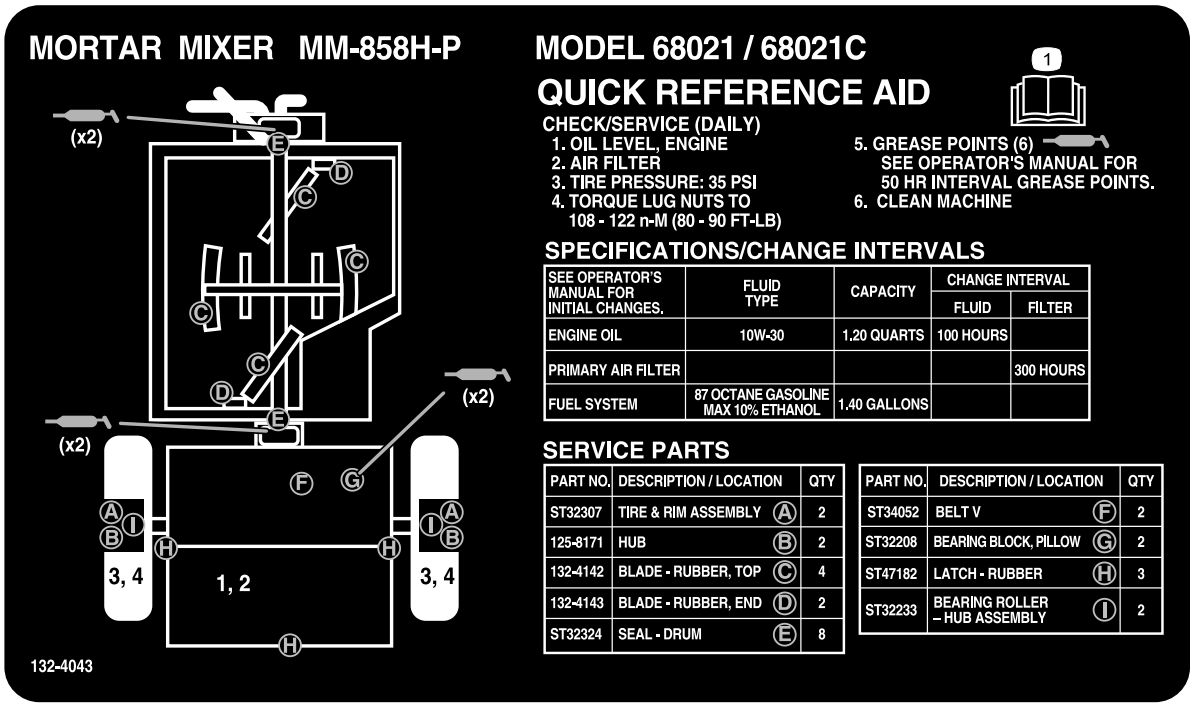

decal132-4043

132-4043

1. Read the *Operator's Manual* for more information on servicing the machine.

Setup

Loose Parts

Use the chart below to verify that all parts have been shipped.

Procedure	Description	Qty.	Use
1	Dump handle Bolt Nut	1 2 2	Install the dump handle.
2	Tow pole kit (sold separately)	1	Install the tow pole (side-dump models only).
3	Safety chain (included with the tow pole kit) Connecting link (included with the tow pole kit)	1 2	Install the safety chain.

1

Installing the Dump Handle

Parts needed for this procedure:

1	Dump handle
2	Bolt
2	Nut

Procedure

1. Cut the cable ties to remove the dump handle from the underside of the grate.
2. Install the dump handle to the side of the drum using 2 bolts and nuts as shown in Figure 3, Figure 4, or Figure 5, as appropriate for your model.

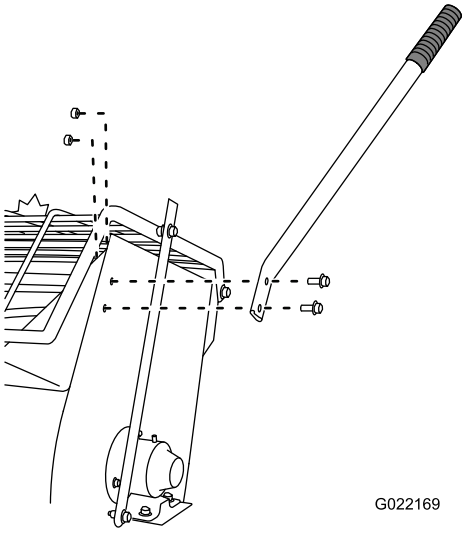

g022169

Figure 3
Models 68013, 68016, 68020

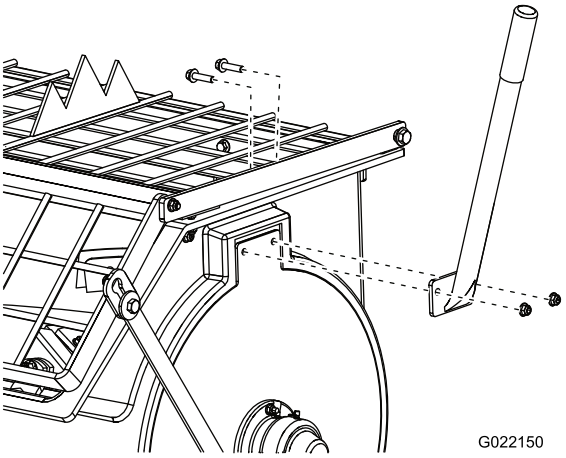

g022150

Figure 4
Models 68014, 68017, 68021

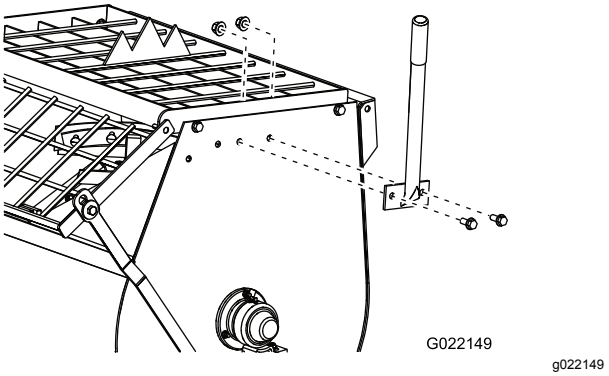

Figure 5
Model 68024

2

Installing the Tow Pole

Parts needed for this procedure:

1	Tow pole kit (sold separately)

Tow Pole Specifications

Purchase the tow pole kit (including fasteners) that meets your needs from your Authorized Service Dealer. The machine has the following tow pole options:

Hitch Type	Length
50 mm (2 inch) ball—stamped	78.7 cm (31 inches) or 127 cm (50 inches)
50 mm (2 inch) ball—forged	78.7 cm (31 inches) or 127 cm (50 inches)
Pintle	78.7 cm (31 inches) or 127 cm (50 inches)

Installing the Tow Pole

1. Remove the bolt and nut from the tow pole (Figure 6).

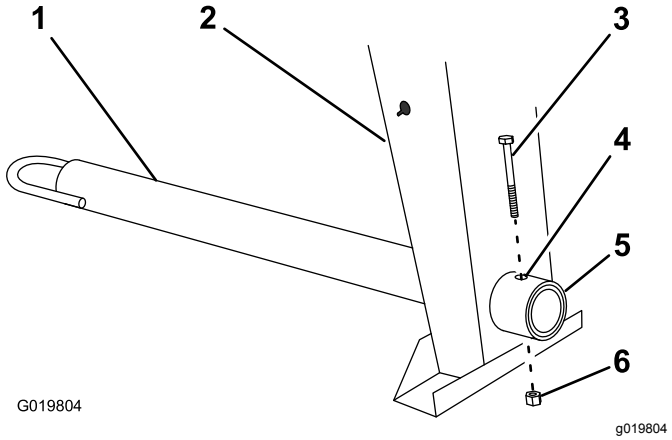

Figure 6

1. Tow pole
2. Front post
3. Bolt
4. Bolt hole
5. Frame fitting
6. Nut

2. Slide the tow pole forward and align the hole in the pole with the hole in the frame fitting (Figure 6).
3. Insert the bolt through the holes in the fitting and the pole (Figure 6).
4. Thread the nut onto the bolt and tighten them until they are tight against the frame fitting (Figure 6).

   Note: If the self-locking nylon insert in the locknut wears with use, replace the nut with a new Grade 5 or Grade 8 locknut.

3

Installing the Safety Chain

Parts needed for this procedure:

1	Safety chain (included with the tow pole kit)
2	Connecting link (included with the tow pole kit)

Procedure

Safety chain and connecting link are included in the tow pole kit (sold separately); refer to 2 Installing the Tow Pole (page 11).

Form a hook on the end of a bendable piece of rod or stiff wire (not included) and install the safety chain and connecting links as shown in Figure 7.

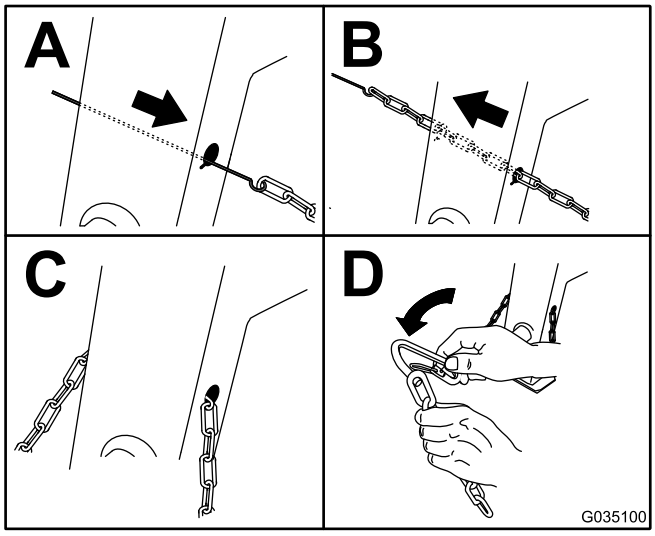

g035100

Figure 7

Note: Ensure that approximately equal lengths of safety chain extend from either side of the front post.

Product Overview

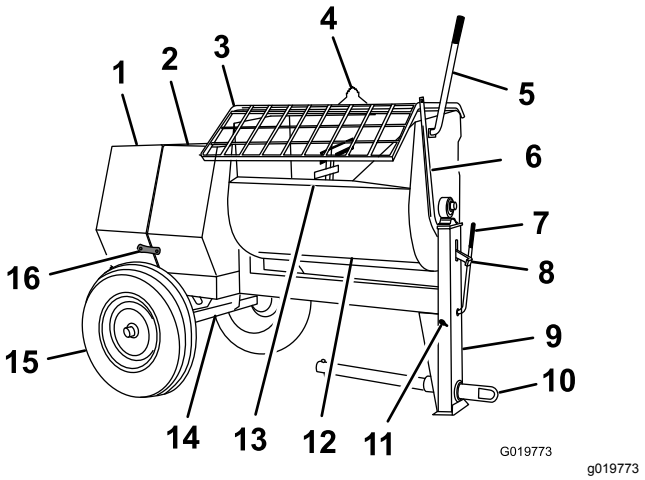

Figure 8

Right Side (Belt-Drive Models)

1.	Rear cowl	7.	Clutch lever	13.	Chute
2.	Front cowl	8.	Drum latch	14.	Axle
3.	Grate	9.	Front post	15.	Wheel assembly
4.	Bag splitter	10.	Tow pole	16.	Cowl latch
5.	Dump handle	11.	Safety-chain keyhole		
6.	Grate lift arm	12.	Drum		

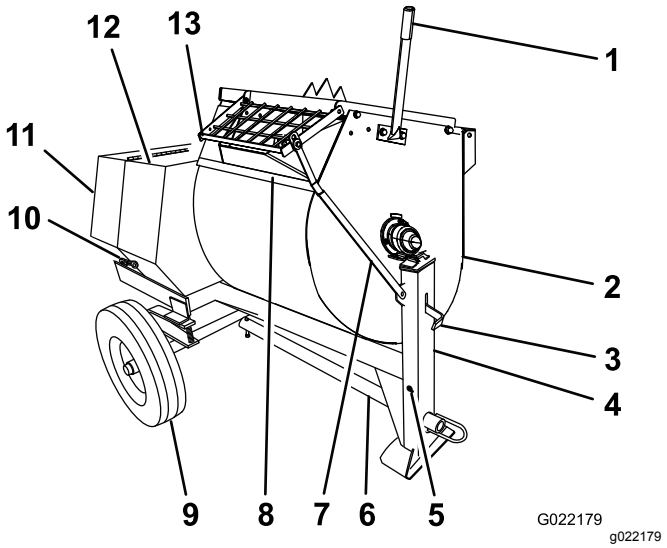

Figure 9

Right Side (Gearbox Model)

1.	Dump handle	6.	Tow pole	11.	Rear cowl
2.	Drum	7.	Grate lift arm	12.	Front cowl
3.	Drum latch	8.	Chute	13.	Grate
4.	Front post	9.	Wheel assembly		
5.	Safety-chain keyhole	10.	Cowl latch		

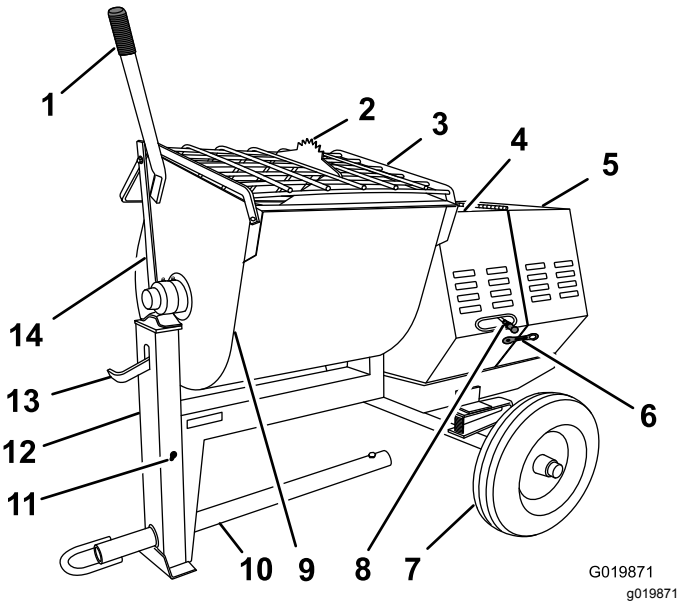

Figure 10

Left Side (Gearbox Model)

1.	Dump handle	6.	Cowl latch	11.	Safety-chain keyhole
2.	Bag splitter	7.	Wheel assembly	12.	Front post
3.	Grate	8.	Clutch lever	13.	Drum latch
4.	Front cowl	9.	Drum	14.	Grate lift arm
5.	Rear cowl	10.	Tow pole		

Controls

Become familiar with all the controls before you start the engine and operate the machine.

Clutch Lever

Use the clutch lever to engage and disengage the paddles.

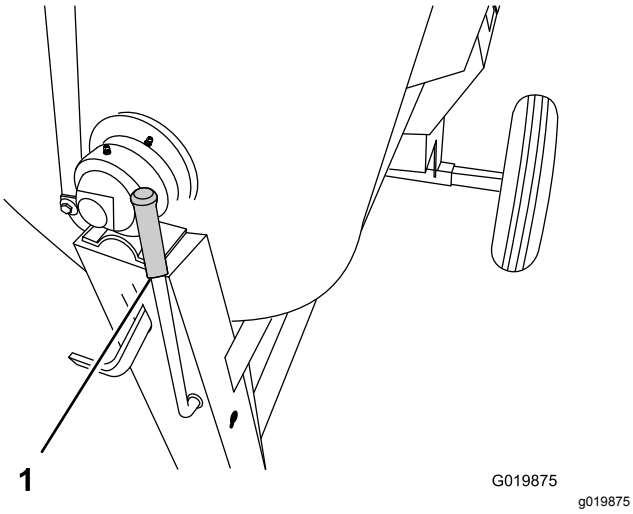

Figure 11
Belt-Drive Models

1. Clutch lever

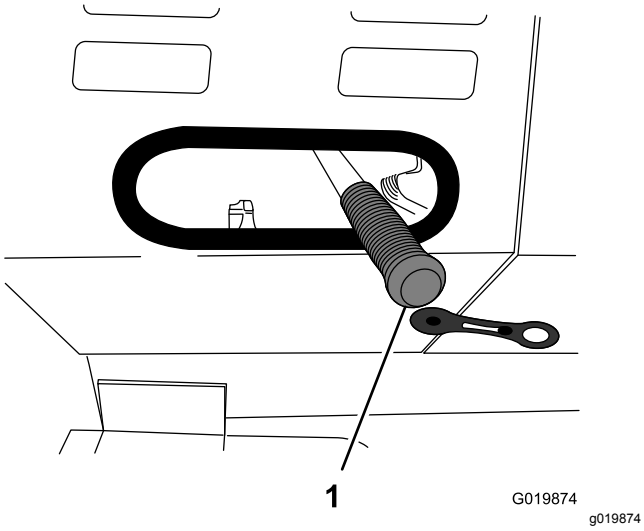

Figure 12
Gearbox Model

1. Clutch lever

Drum Latch

Use the drum latch to secure the drum to the mix position (upright) for mixing operations and when transporting the machine.

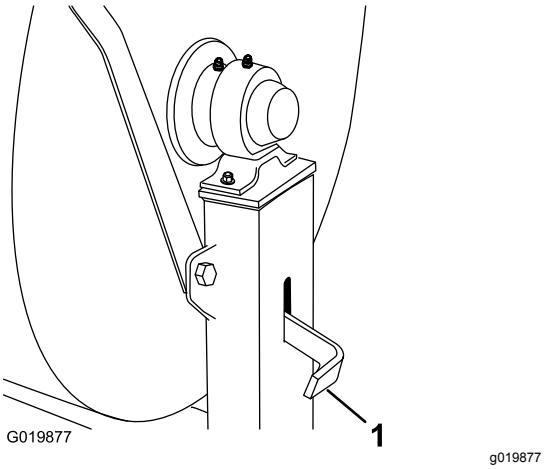

Figure 13

1. Drum latch

Dump Handle

Use the dump handle to rotate the drum to the dump position and to rotate the drum to the mix position (upright).

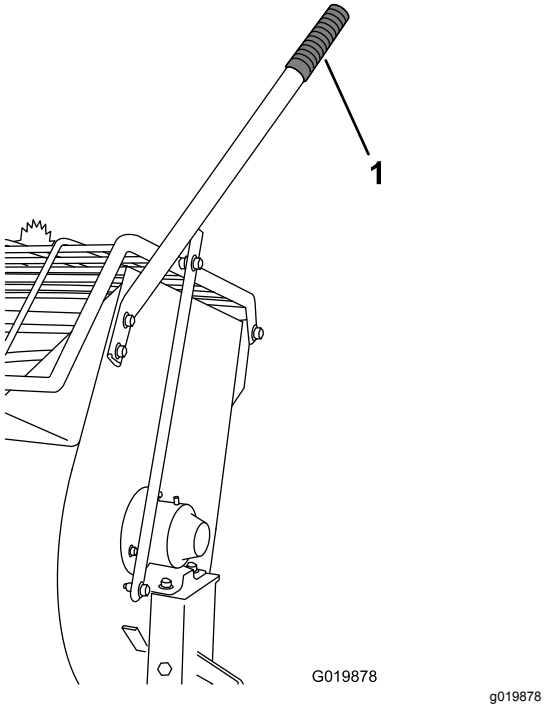

Figure 14

1. Dump handle

Engine Controls

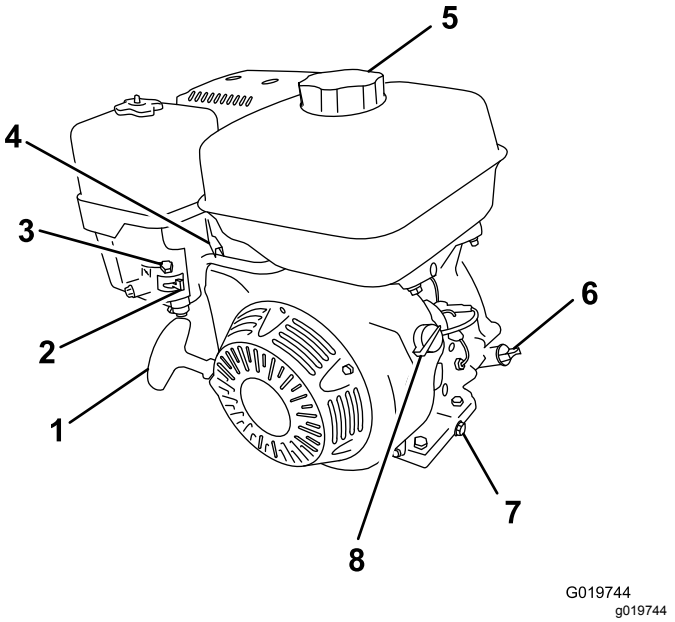

Figure 15

1. Recoil-start handle
2. Fuel valve
3. Choke lever
4. Throttle lever
5. Fuel cap
6. Oil dipstick
7. Oil-drain plug
8. On/Off switch

Fuel Valve

The fuel valve (Figure 16) is located underneath the choke lever. Move the lever for the fuel valve to the ON position before attempting to start the engine. When you have finished mixing, shut off the engine and move the fuel-valve lever to the OFF position.

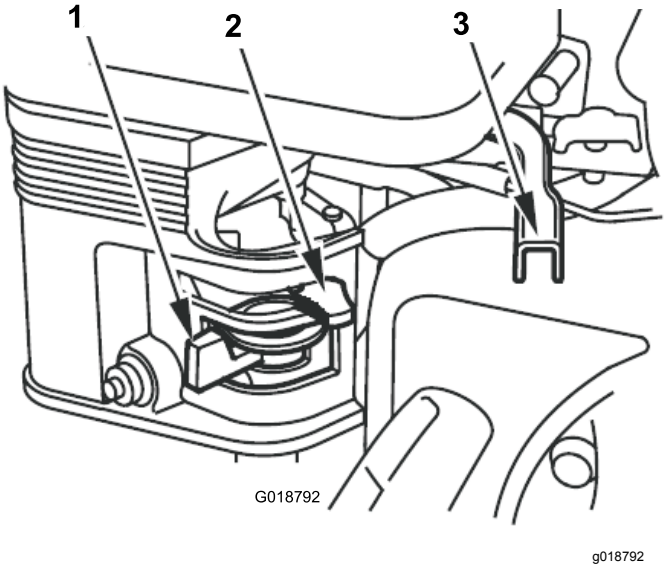

Figure 16

1. Fuel valve
2. Choke lever
3. Throttle lever

Choke Lever

Use the choke lever (Figure 16) to start a cold engine. Before pulling the recoil-start handle, move the choke lever to the CLOSED position. Once the engine is running, move the choke lever to the OPEN position. Do not use the choke if the engine is already warmed up or if the air temperature is high.

Throttle Lever

The throttle lever (Figure 16) controls the speed (rpm) of the engine. It is located next to the choke lever. It sets the engine speed and therefore can increase and decrease the rotation speed of the mixing paddles. For best performance, set this control to the FAST position when mixing material.

Engine On/Off Switch

The On/Off switch is located on the front of the engine.

- Rotate it to the ON position to start and run the engine.
- Rotate it to the OFF position to shut off the engine.

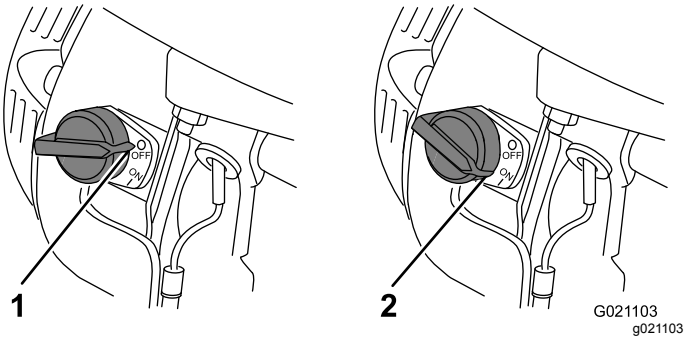

Figure 17

1. OFF position
2. ON position

Recoil-Start Handle

To start the engine, pull the recoil-start handle (Figure 15) quickly to turn the engine over. The engine controls described above must all be set correctly for the engine to start.

Oil-Level Switch

The oil-level switch is located inside the engine, and it does not allow the engine to run in the event the oil level is below the safe operating limit.

Specifications

Note: Specifications and design are subject to change without notice.

Machine Specifications

Model	68013	68014	68016	68017	68020	68021	68024
Batch Capacity	0.17 m^3 (6.0 ft^3)	0.17 m^3 (6.0 ft^3)	0.17 m^3 (6.0 ft^3)	0.17 m^3 (6.0 ft^3)	0.23 m^3 (8.0 ft^3)	0.23 m^3 (8.0 ft^3)	0.34 m^3 (12.0 ft^3)
Total Volume	0.20 m^3 (6.9 ft^3)	0.20 m^3 (6.9 ft^3)	0.20 m^3 (6.9 ft^3)	0.20 m^3 (6.9 ft^3)	0.25 m^3 (9.0 ft^3)	0.25 m^3 (9.0 ft^3)	0.42 m^3 (14.8 ft^3)
Drum Material	Steel	Polyethylene	Steel	Polyethylene	Steel	Polyethylene	Steel
Length (without tow pole)	163 cm (64 inches)	163 cm (64 inches)	163 cm (64 inches)	163 cm (64 inches)	193 cm (86 inches)	193 cm (86 inches)	205.7 cm (81 inches)
Width	86 cm (34 inches)	86 cm (34 inches)	86 cm (34 inches)	86 cm (34 inches)	86 cm (34 inches)	86 cm (34 inches)	142.2 cm (50 inches)
Height	137 cm (54 inches)	137 cm (54 inches)	137 cm (54 inches)	137 cm (54 inches)	137 cm (54 inches)	137 cm 0(54 inches)	150 cm (59 inches)
Weight	250 kg (550 lb)	241 kg (530 lb)	250 kg (550 lb)	241 kg (530 lb)	275 kg (605 lb)	266 kg (585 lb)	508 kg (1120 lb)
Axle	86 to 117 cm (34 to 46 inches) extendable	86 to 117 cm (34 to 46 inches) extendable	86 to 117 cm (34 to 46 inches) extendable	86 to 117 cm (34 to 46 inches) extendable	86 to 117 cm (34 to 46 inches) extendable	86 to 117 cm (34 to 46 inches) extendable	142 cm (56 inches) fixed
Engine	Honda® GX160	Honda® GX160	Honda® GX240	Honda® GX240	Honda® GX240	Honda® GX240	Honda® GX340
Drive	Belt	Belt	Belt	Belt	Belt	Belt	Gearbox

Operation

Important: **Before operating, check the fuel and oil levels, and remove debris from the machine. Ensure that the area is clear of people.**

Think Safety First

Carefully read all safety instructions and symbols in this manual, on the product decals, and other media supplied with the product. Knowing this information could help you or bystanders avoid injury.

Know how to quickly shut down the machine in an emergency.

Use a hard-hat, hearing protection, a shirt with long sleeves that are tight at the wrists, tight-fitting gloves without drawstrings or loose cuffs, eye protection, and a dust mask or respirator. A mesh visor alone does not provide sufficient eye protection; supplement with protective glasses.

⚠ CAUTION

This machine produces sound levels that can cause hearing loss through extended periods of exposure.

Wear hearing protection when operating this machine.

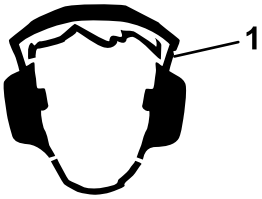

g229846

Figure 18

1. Wear hearing protection.

Towing the Machine

Before towing the machine, read all the information and perform all the applicable procedures to in this section to ensure safe and proper towing.

⚠ WARNING

Towing the machine at high speed increases the risk of a hitch malfunction and tire failure. Higher speeds also increase the momentum of the machine and braking distance. If the machine detaches from the tow vehicle at high speed, it could cause damage to property, or injury or death to bystanders.

Do not exceed 88 km/h (55 mph) when towing the machine. For poor road conditions or inclement weather, reduce speed accordingly.

⚠ WARNING

Towing the machine with material in the drum increases the risk of a hitch malfunction and tire failure. In addition, material could bounce out of the drum and hit other vehicles and/or people. Material in the drum increases the weight, which affects momentum and braking distance.

Do not tow the machine with material in the drum.

- Review and understand the Safe Operating Practices (page 4).
- Test the brakes of the tow vehicle before towing.
- Avoid sudden starts and stops while towing the machine.

Tow Vehicle Requirements

Before connecting the machine to your tow vehicle, ensure that your vehicle is prepared as follows:

- Ensure that your tow vehicle has towing capacity for the weight of the machine; refer to Specifications (page 16).
- Use a Class 2 or larger receiver.
- Ensure that your tow vehicle has the appropriate hitch to tow the machine; options include a 50 mm (2 inch) ball hitch or a pintle hitch.
- If the machine is equipped with a trailer-light kit, ensure that the electrical connector of the tow vehicle is compatible with the electrical connector of the machine. The machine uses a standard 4-pin, flat plug. If your tow vehicle has a different type of plug, obtain an adapter from an automotive parts store.

Preparing the Machine for Towing

1. Shut off the engine and fuel valve.
2. Empty the drum.

3. Position the drum in the mix position (upright) and lock it.
4. Close the engine cowl and secure the cowl latches (Figure 19).

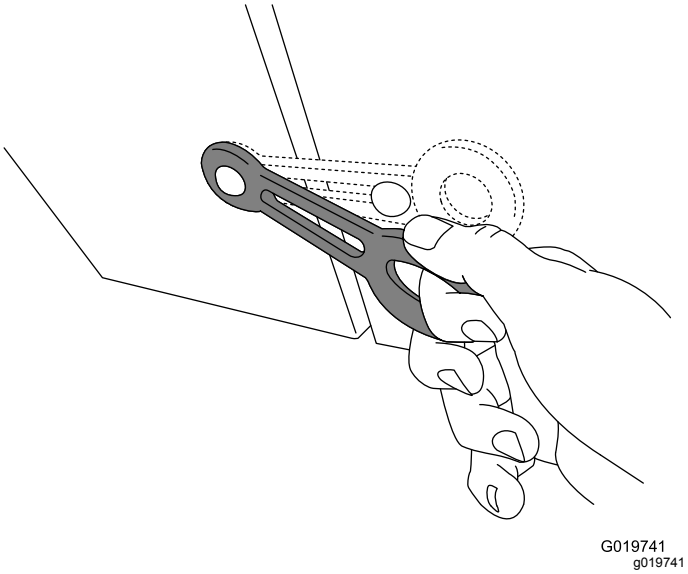

Figure 19

5. If you have adjusted the axle to the narrow position (if equipped on your model), extend the axle; refer to Adjusting the Axle Width (page 20).
6. Inspect the tires; refer to Inspecting the Tires (page 37).

Hitching the Machine to a Tow Vehicle

Your machine is equipped with 1 of the following hitch types; hitch it as described in the appropriate procedure:

- Stamped-ball coupler— Hitching a Stamped-Ball Coupler (page 18)
- Forged-ball coupler— Hitching a Forged-Ball Coupler (page 18)
- Pintle-hitch coupler— Hitching a Pintle-Hitch Coupler (page 19)

Hitching a Stamped-Ball Coupler

1. Apply chassis grease to the socket of the coupler and the area of the clamp that contacts the ball.
2. Oil the pivot points and sliding surfaces of the coupler with SAE 30 motor oil.
3. Hitch the machine as shown in Figure 20.

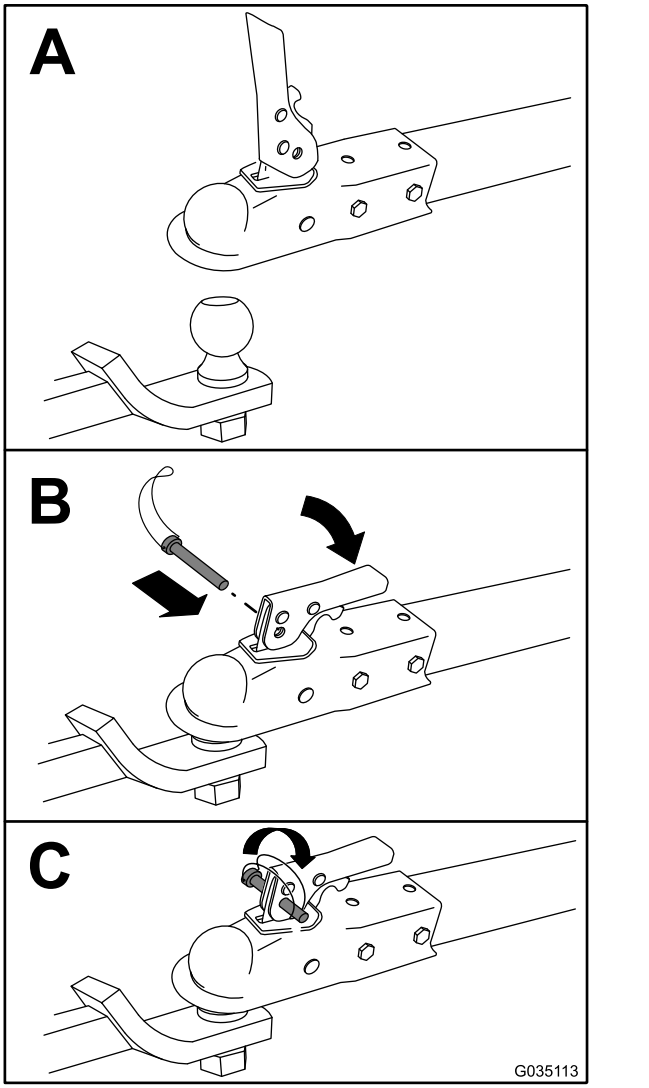

g035113

Figure 20

Hitching a Forged-Ball Coupler

1. Apply removable thread-locking compound to the threads of the coupler bolt to prevent the coupler handle from coming loose.

   Important: **Apply thread-locking compound as needed in the future.**
2. Apply chassis grease to the socket of the coupler and the area of the clamp that contacts the ball.
3. Hitch the machine as shown in Figure 21.

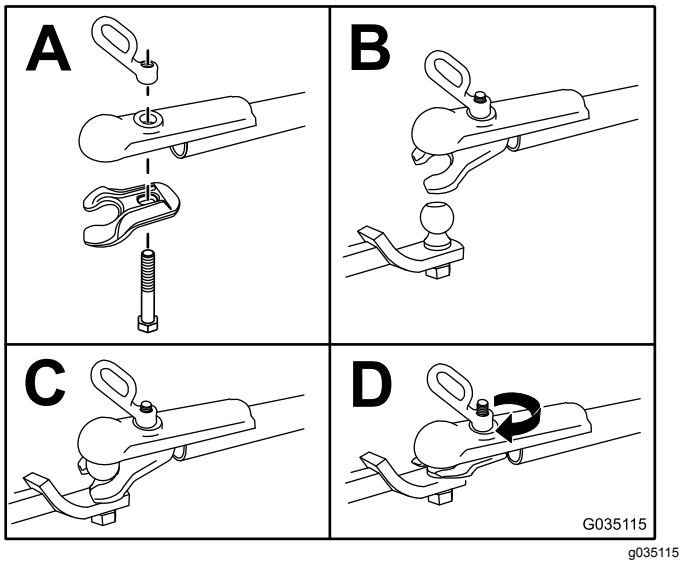

Figure 21

Note: Use a wrench to keep the bolt from spinning.

Hitching a Pintle-Hitch Coupler

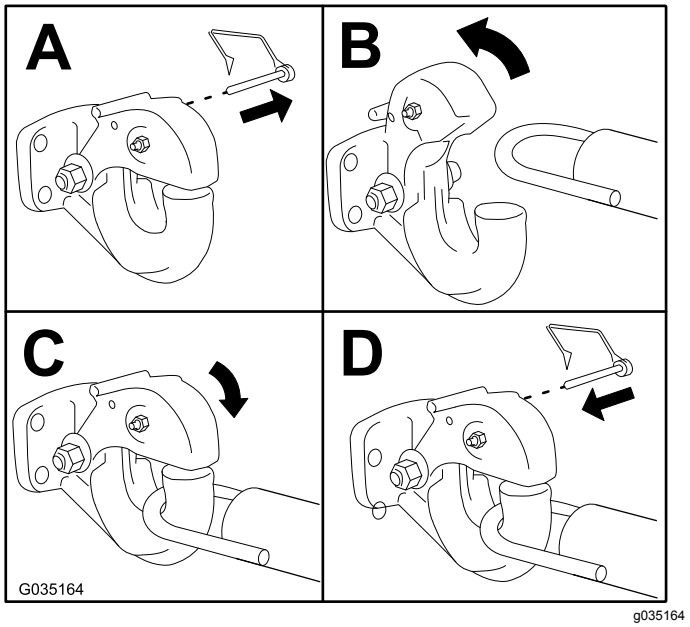

Figure 22

Connecting the Safety Chains to the Tow Vehicle

1. Pull the safety chain through the slots in the keyholes, so that the lengths on each side are equal.
2. Cross both lengths of chain **under** the tow pole.

   Note: Crossing the chains decreases the chances of the front of the machine dropping to the ground if the hitch does not hold the connection.

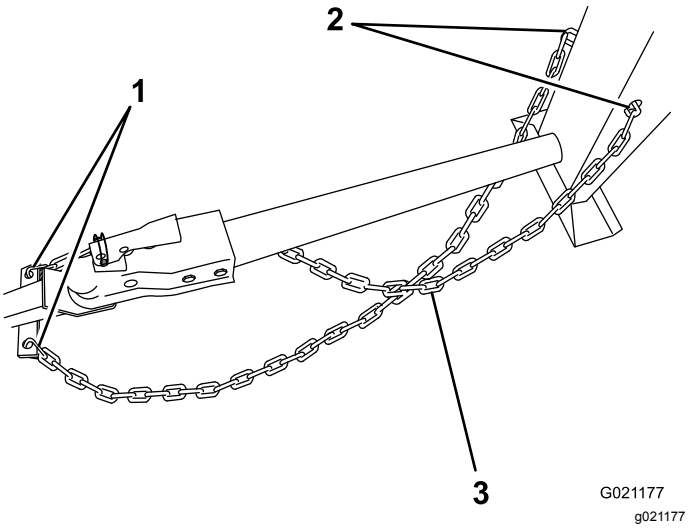

Figure 23

1. Connecting links
2. Keyholes in front post
3. Chain crossed under tow pole

3. Connect each length of chain to the safety chain mounting point on the tow vehicle with the connecting links (Figure 24).

   Important: **Ensure that the chain has enough slack for turning around corners when towing the machine.**

   Note: Stow the excess chain inside the bottom of the front post by pushing it into the keyholes and latching the appropriate links into the keyhole slots.

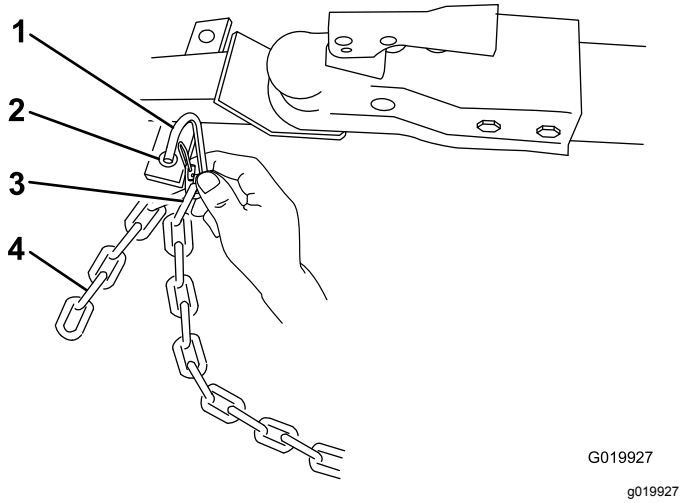

Figure 24

1. Connecting link
2. Safety chain mounting point on tow vehicle
3. Chain link
4. Chain

Connecting and Checking the Lights

Machines Equipped with a Light Kit Only

1. Connect the electrical plug of the machine with the electrical plug of the tow vehicle (Figure 27).

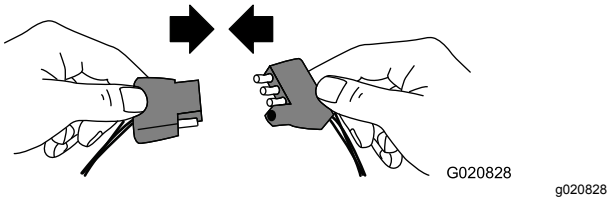

Figure 25

Note: The machine uses a standard 4-pin, flat plug. If your tow vehicle has a different type of plug, obtain an adapter from an automotive parts store.

2. Ensure that the tow vehicle is in the NEUTRAL position, engage the parking brake, and start the engine.
3. Test the lights as follows:
   A. Turn on the headlights of the tow vehicle.

      The tail lights of the machine should illuminate.

   B. Press the brake pedal of the tow vehicle.

      The brake lights of the machine should illuminate.

   C. Operate each turn signal of the tow vehicle in turn.

      The corresponding turn-signal lights of the machine should illuminate.

Adjusting the Axle Width

Models with Adjustable Axles Only

If your model is equipped with an adjustable axle (Figure 27), you can adjust the axle to the narrow position to move the machine through a narrow access point, such as the gate of a fence or the doorway of a building.

⚠ WARNING

The machine is not stable when towed with the axle in the narrow position.

Tow the machine with the axle in the wide position.

Important: **The machine is less stable with the axle in the narrow position. Only adjust it to the narrow position when necessary to move past an obstruction, then return it to the wide position before towing or operating the machine.**

1. Park the machine on a level surface and disconnect the machine from the tow vehicle.
2. Secure the machine from movement.
3. Empty the drum, move it to the upright position, and lock the drum.
4. Align a jack with an adequate lift height and weight capacity under the axle; refer to Specifications (page 16).
5. Lift the machine until the tires are off the ground.
6. Use a jack stand at each support point on the rear frame extension (Figure 26).

   ⚠ WARNING

   Mechanical or hydraulic jacks may fail to support the machine and cause serious injury.

   Use jack stands when supporting the machine.

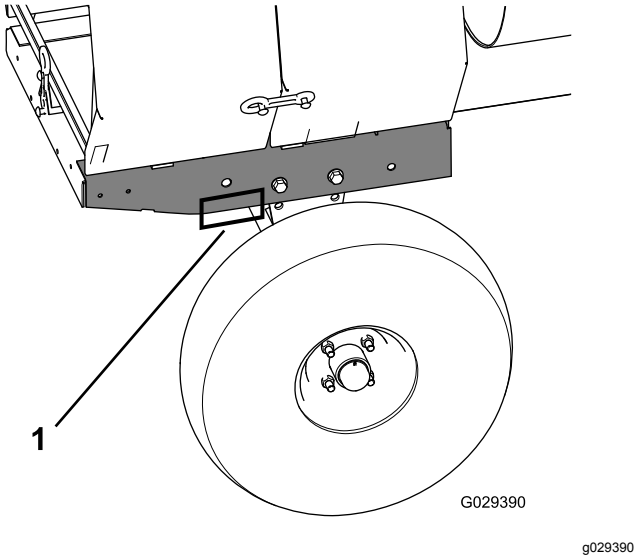

Figure 26

1. Support point (2)

7. Remove the bolts and nuts that secure the inner axle to the outer axle (Figure 27).

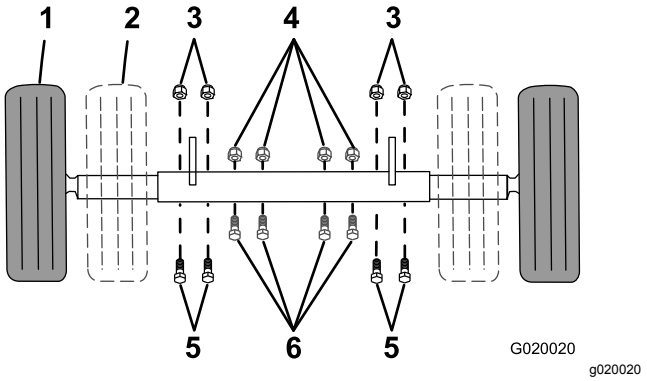

Figure 27

1. Wide position (towing)
2. Narrow position
3. Nut—wide position
4. Nut—narrow position
5. Bolt—wide position
6. Bolt—narrow position

8. Align the inner axle to the desired position as follows:
   - Slide each side of the axle inward to the narrow position (Figure 27).
   - Slide each side of the axle outward to the wide (tow) position (Figure 27).
9. Secure the axle with the bolts and nuts removed previously (Figure 27) and torque them to 87 N·m (64 ft-lb).

Preparing to Use the Machine

1. Park the machine on a level surface and disconnect the machine from the tow vehicle.
2. Ensure that all guards and paddles are in place and in good condition.
3. Perform all daily maintenance procedures prescribed in Maintenance (page 27).
4. Chock the front and back of the tires to prevent the machine from moving.
5. Move the drum to the upright position and lock it.

Opening the Cowl

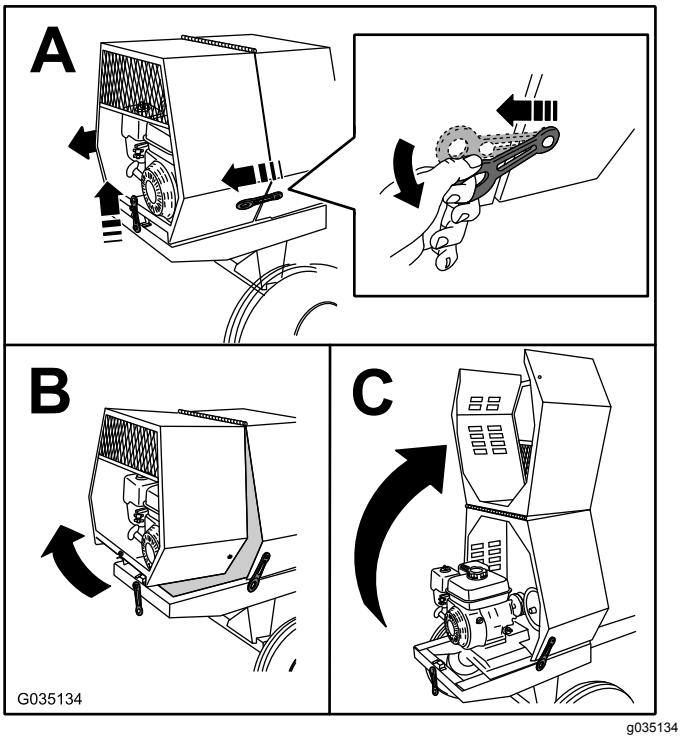

Figure 28

Closing the Cowl

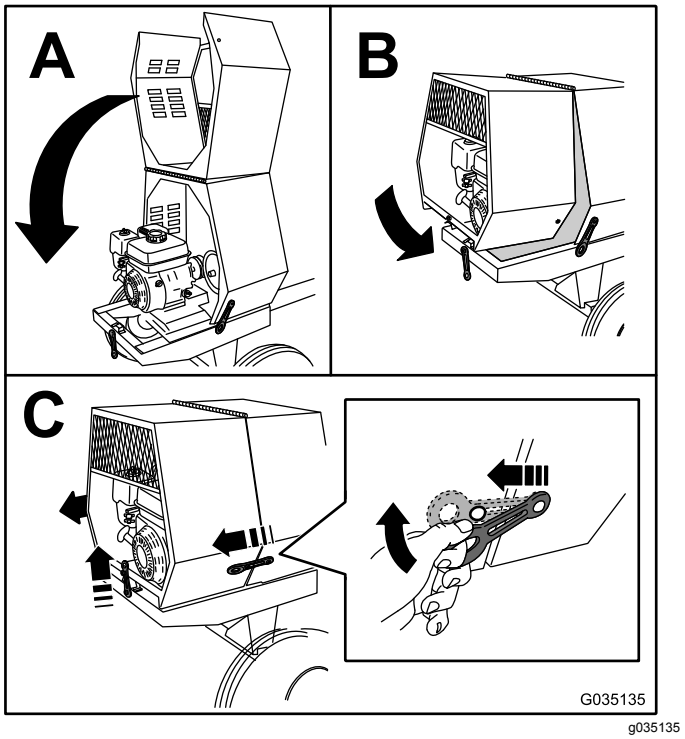

Figure 29

Adding Fuel

⚠ DANGER

In certain conditions, fuel is extremely flammable and highly explosive. A fire or explosion from fuel can burn you and others and can damage property.

- **Fill the fuel tanks outdoors, in an open area, when the engine is cold. Wipe up any fuel that spills.**
- **Never fill the fuel tanks inside an enclosed trailer.**
- **Never smoke when handling fuel and stay away from an open flame or where fuel fumes may be ignited by a spark.**
- **Store fuel in an approved container and keep it out of the reach of children. Never buy more than a 30-day supply of fuel.**
- **Do not operate without entire exhaust system in place and in proper working condition.**

⚠ DANGER

In certain conditions during fueling, static electricity can be released, causing a spark that can ignite the fuel vapors. A fire or explosion from fuel can burn you and others and can damage property.

- **Always place fuel containers on the ground away from your vehicle before filling.**
- **Do not fill fuel containers inside a vehicle or on a truck or trailer bed, because interior carpets or plastic truck bed liners may insulate the container and slow the loss of any static charge.**
- **When practical, remove equipment from the truck or trailer and refuel the equipment with its wheels on the ground.**
- **If this is not possible, then refuel such equipment on a truck or trailer from a portable container rather than from a fuel-dispenser nozzle.**
- **If you must use a fuel-dispenser nozzle, keep the nozzle in contact with the rim of the fuel tank or container opening at all times until fueling is complete.**

⚠ WARNING

Fuel is harmful or fatal if swallowed. Long-term exposure to vapors can cause serious injury and illness.

- **Avoid prolonged breathing of vapors.**
- **Keep your face away from the nozzle and fuel tank opening.**
- **Keep fuel away from your eyes and skin.**

Fuel Recommendations

- For best results, use only clean, fresh (less than 30 days old), unleaded gasoline with an octane rating of 87 or higher ((R+M)/2 rating method).
- **Ethanol**: Gasoline with up to 10% ethanol (gasohol) or 15% MTBE (methyl tertiary butyl ether) by volume is acceptable. Ethanol and MTBE are not the same. Gasoline with 15% ethanol (E15) by volume is not approved for use. **Never use gasoline that contains more than 10% ethanol by volume**, such as E15 (contains 15% ethanol), E20 (contains 20% ethanol), or E85 (contains up to 85% ethanol). Using unapproved gasoline may cause performance problems and/or engine damage which may not be covered under warranty.
- **Do not** use gasoline containing methanol.

- **Do not** store fuel either in the fuel tank or in fuel containers over the winter unless you use a fuel stabilizer.
- **Do not** add oil to gasoline.

Important: **To reduce starting problems, add fuel stabilizer to the fuel all season, mixing it with fuel less than 30 days old; run the machine dry before storing it for more than 30 days.**

Do not use fuel additives other than a fuel stabilizer/conditioner. Do not use fuel stabilizers with an alcohol base such as ethanol, methanol, or isopropanol.

Fuel Tank Capacity

Model	Fuel Tank Capacity
68013 and 68014	3.1 L (0.82 US gallons)
68016, 68017, 68020, 68021	5.3 L (1.40 US gallons)
68024	6.1 L (1.61 US gallons)

Filling the Fuel Tank

1. Park the machine on a level surface, shut off the engine, and allow the engine to cool.
2. Clean around the fuel cap and remove it (Figure 30).

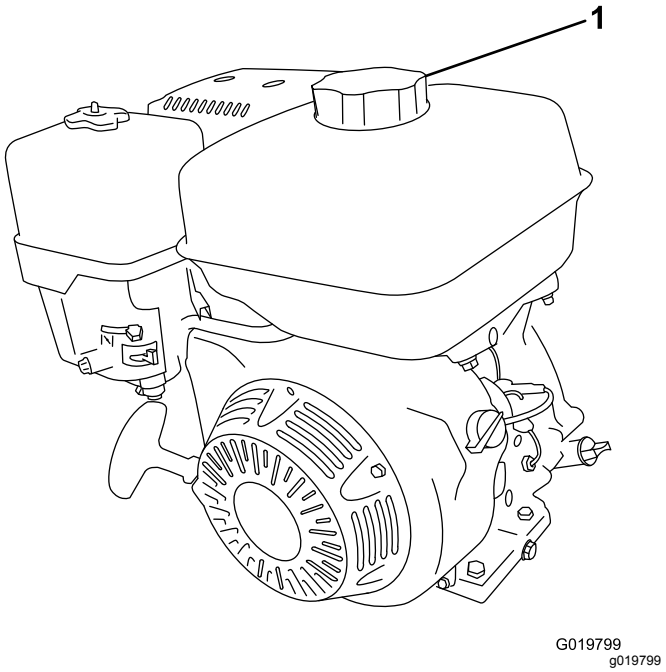

Figure 30

1. Fuel cap

3. Add fuel to the fuel tank until the level is at the maximum fuel level (Figure 31).

Important: **This space in the tank allows fuel to expand. Do not fill the fuel tank completely full.**

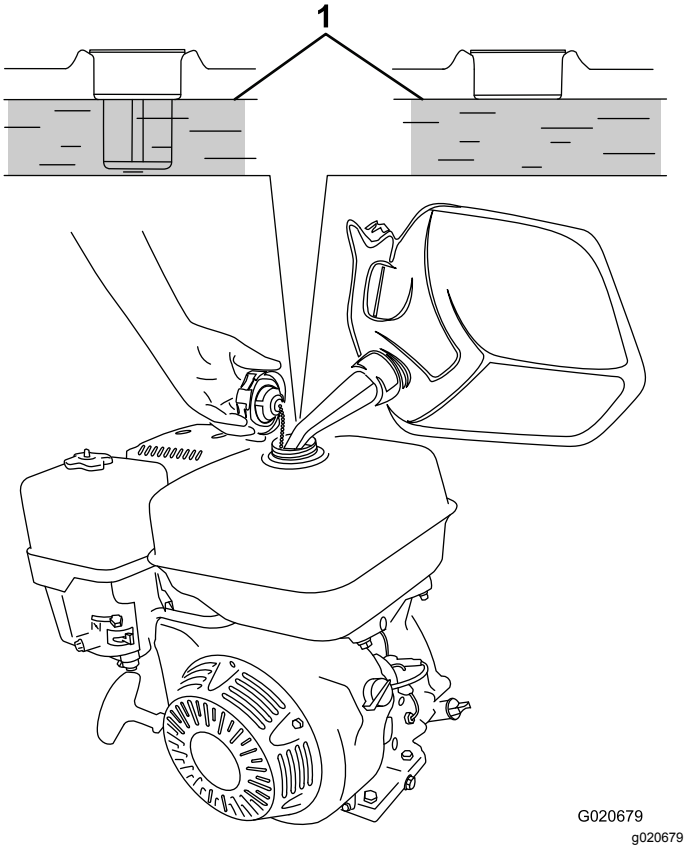

Figure 31

1. Maximum fuel level

4. Install the fuel cap securely (Figure 30).
5. Wipe up any spilled fuel.

Performing Daily Maintenance

Before starting the machine each day, perform the Each Use/Daily procedures listed in Maintenance (page 27).

Starting the Engine

1. Ensure that the clutch lever is in the OFF position.
2. Move the fuel valve to the OPEN position, all the way to the right (Figure 32).

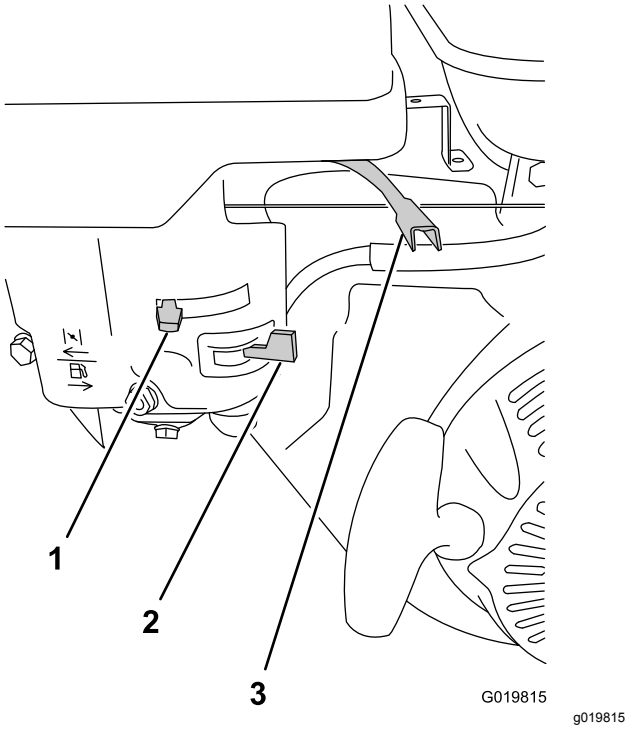

Figure 32

1. Choke lever
2. Fuel valve
3. Throttle lever

3. Move the choke lever to the ON position (Figure 32).

   Note: A warm or hot engine may not require choking.

4. Move the throttle lever 1/3 of the way toward the MAX position.
5. Move the engine switch to the ON position (Figure 33).

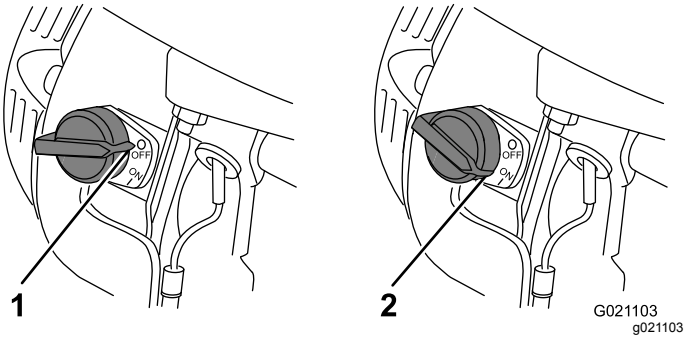

Figure 33

1. Engine switch—OFF position
2. Engine switch—ON position

6. Pull the starter handle lightly until you feel resistance, then pull the handle briskly (Figure 34). Return the starter handle gently.

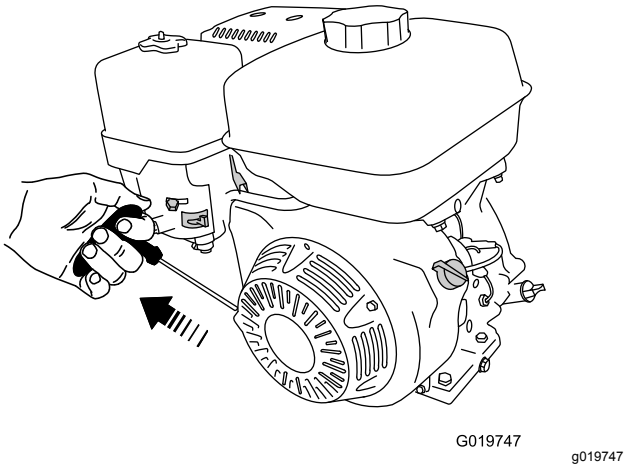

Figure 34

7. After the engine starts, gradually move the choke lever back to the OFF position. If the engine stalls or hesitates, move the choke back to the ON position again until the engine warms up. Then move it to the OFF position.

Shutting Off the Engine

1. Move the throttle lever to the MIN position (Figure 15).

   Note: If the engine has been working hard or is hot, let it idle for a minute before shutting off the engine. This helps to cool the engine before stopping. In an emergency, shut off the engine immediately.

2. Move the engine switch to the OFF position.
3. Move the fuel valve to the CLOSED position, all the way to the left.

Mixing the Material

⚠ DANGER

Eye and skin contact with concrete materials and breathing the dust involved is hazardous to your health.

- **Ensure that there is adequate air ventilation.**
- **Wear a dust mask to prevent inhalation of dust while using the machine; refer to Safe Operating Practices (page 4).**
- **Avoid direct contact of cement and concrete materials with skin and eyes.**

⚠ DANGER

This machine is capable of amputating hands.

- **Stay in the operator's position while the machine is running.**
- **Keep all bystanders a safe distance away from the machine.**
- **Stop the machine immediately if any people or animals enter the work area.**
- **Never place any part of your body into a position that causes an unsafe operating condition.**

Important: **Do not add more material than the batch capacity of the machine; refer to Specifications (page 16).**

Note: Follow the manufacturer's instructions that are printed on the packaging of the product you are using.

1. Ensure that there is no old, loose material in the drum that can contaminate the batch of material; refer to Cleaning the Drum (page 26) and Dumping the Material (page 26), then return the drum to the upright position.

   Note: Ensure that the drum is in the mix position (upright) and the drum latch is engaged.

2. Move the clutch lever to the OFF position (Figure 35 or Figure 36).
3. Start the engine.

   Note: Allow the engine to warm up at 2/3 throttle for 1 to 2 minutes.

4. Set the throttle lever on the engine to the MAX position.
5. Move the clutch lever to the ON position (Figure 35 or Figure 36).

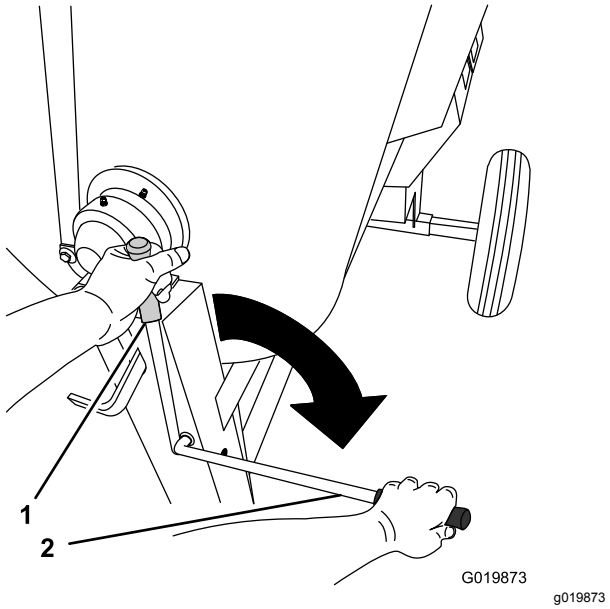

Figure 35
Belt-Drive Models

1. OFF position
2. ON position

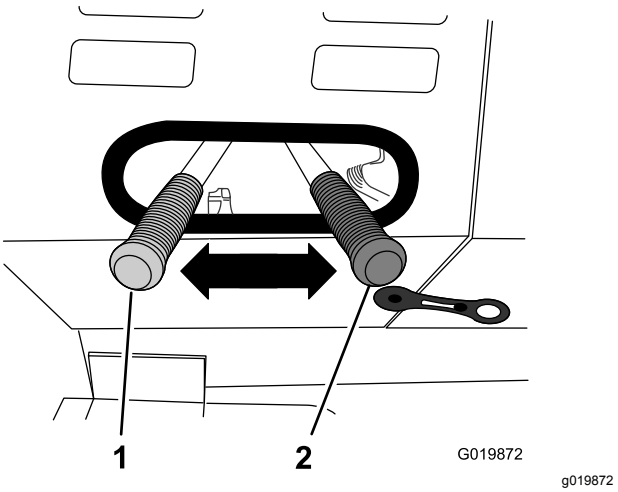

Figure 36
Gearbox Models

1. ON position
2. OFF position

6. Add the ingredients for the batch as follows:
   A. Pour water into the drum through the grate.
   B. Add the plaster, cement, or other binding material.

      Note: You can open bags of cement, plaster, and binding materials by lowering the bag onto the bag splitter (Figure 37).

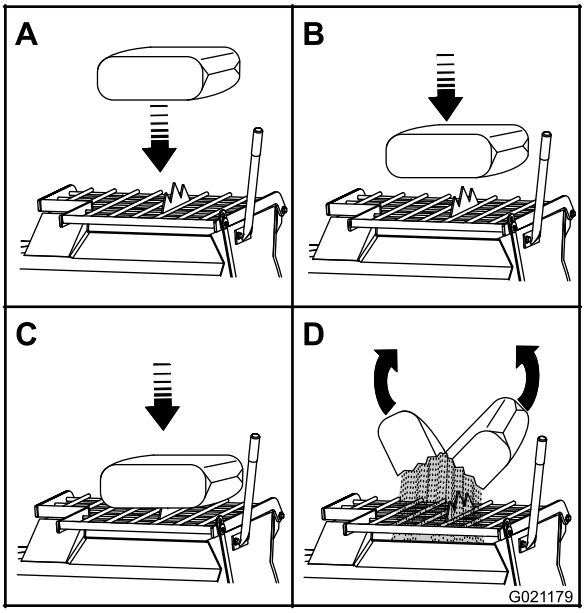

g021179

Figure 37

C. If you are using sand and/or other reinforcing materials, add them into the drum.

7. Allow the paddles to mix the material until the ingredients have a uniform appearance.

   Note: If needed, add water or plaster, cement, or other binding material until the consistency of the batch is correct.

Dumping the Material

⚠ DANGER

Contact with the mixing paddles could cause damage or injury.

Never put your hands inside the drum while the engine is running.

Note: When dumping a batch of material, leave the engine/motor running and the clutch in the ON position so that the rotating paddles help discharge the material.

1. Align a wheelbarrow or similar container of adequate capacity in the path of the drum opening.
2. Grasp the dump handle with your left hand (Figure 38).

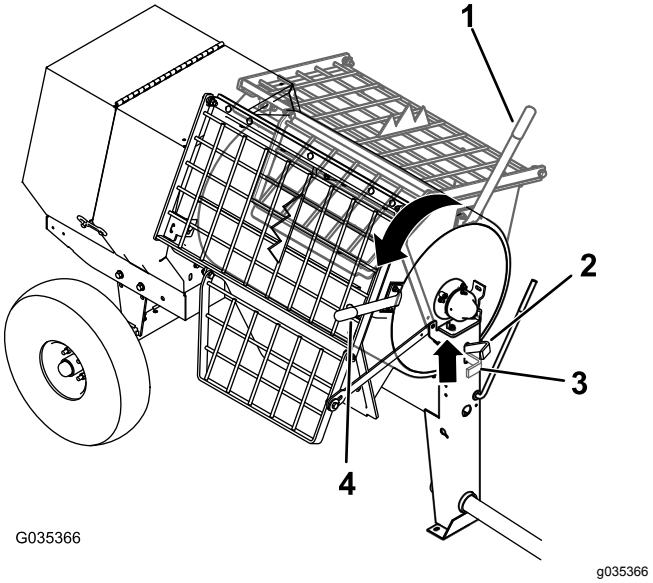

Figure 38

1. Dump handle—Mix position
2. Drum latch—Release position
3. Drum latch—Locked position
4. Dump handle—Dump position

3. Lift the handle of the drum latch (Figure 38).
4. With both hands on the dump handle, rotate it counterclockwise to discharge the contents of the drum (Figure 38).

   Note: Allow the machine to completely discharge the contents of the drum.
5. Rotate the dump handle **clockwise** until the drum latch locks the drum in the upright position (Figure 38).
6. After dumping a batch of material, clean the drum to prevent dried material from contaminating the next batch of material; refer to Cleaning the Drum (page 26).

Cleaning the Drum

Important: **Do not strike on the drum with a shovel, hammer, or any other device to loosen any accumulated dried materials.**

1. Move the clutch lever to the OFF position to stop the paddles.
2. Shut off the engine/motor.
3. Ensure that the drum is in the mix position (upright).
4. Spray the machine with water to remove any accumulated material.
5. Start the engine/motor.
6. Move the clutch lever to the ON position to start the paddles.
7. Dump the drum.

Maintenance

⚠ WARNING

Failure to properly maintain the machine could result in premature failure of machine systems causing possible harm to you or bystanders.

Keep the machine well maintained and in good working order as indicated in these instructions.

Important: **Refer to your engine operator's manual for additional maintenance procedures.**

Recommended Maintenance Schedule(s)

Maintenance Service Interval	Maintenance Procedure
After the first 20 hours	• Change the reduction-case oil (Models 68013 and 68014 only).
After the first 25 hours	• Change the engine oil. • Check the clutch operation (gearbox model only). • Inspect the belts and adjust as necessary (belt-drive models only).
Before each use or daily	• Inspect the air-cleaner elements. • Check the engine-oil level. • Inspect the tires. • Check the reduction-case oil (Models 68013 and 68014 only). • Check the clutch operation (gearbox model only).
After each use	• Clean the drum between mixing batches of material. • Lubricate the trunnions. • Torque the wheel lug nuts to 108 to 122 N·m (80 to 90 ft-lb) after towing.
Every 40 hours	• Check the gearbox oil (gearbox model only). • Inspect the belts and adjust as necessary (belt-drive models only). • Check the clutch operation
Every 50 hours	• Clean the air-cleaner elements. Clean them more frequently in dusty operating conditions.
Every 100 hours	• Change the engine oil. • Check the spark plug. • Clean the spark arrester (if equipped). • Clean the fuel-sediment cup. • Change the reduction-case oil (Models 68013 and 68014 only).
Every 300 hours	• Replace the paper air-cleaner element. Replace it more frequently in dusty operating conditions. • Replace the spark plug.
Every 800 hours	• Replace the gearbox oil (gearbox models only).
Monthly	• Lubricate the pillow-block bearings.
Yearly or before storage	• Clean the fuel-sediment cup.
Every 2 years	• Replace the belts (belt-drive models only).

Pre-Maintenance Procedures

Preparing the Machine for Maintenance

1. Shut off the engine and allow it to cool completely.
2. Park the machine on a level surface.
3. Remove the machine from the tow vehicle.
4. Secure the machine from movement.
5. Disconnect the spark-plug wire.

Disconnecting the Spark-Plug Wire

Pull the spark-plug wire off the terminal of the spark plug (Figure 39).

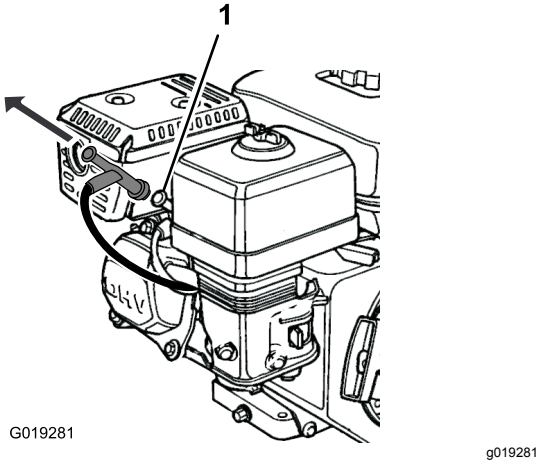

Figure 39

1. Spark plug

Removing the Divider Plate

If your model has a divider plate, you may need to remove it before performing some maintenance procedures:

1. Open the cowl.
2. Use a wrench to remove the 4 bolts that secure the divider plate to the front cowl.

   Note: Retain the fasteners for installing the divider plate.

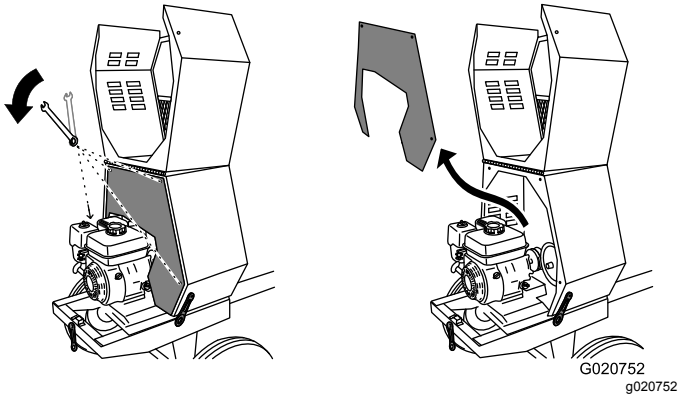

Figure 40

3. To remove the divider plate, lift it upward and tilt it back so that it clears various components.

Installing the Divider Plate

When finished performing maintenance, install the divider plate as follows:

1. Guide the divider plate into position against the front cowl.

   Note: Start with the divider plate rotated slightly counterclockwise, and then rotate it clockwise while lowering it into position.

   Ensure that the divider plate is not backward.

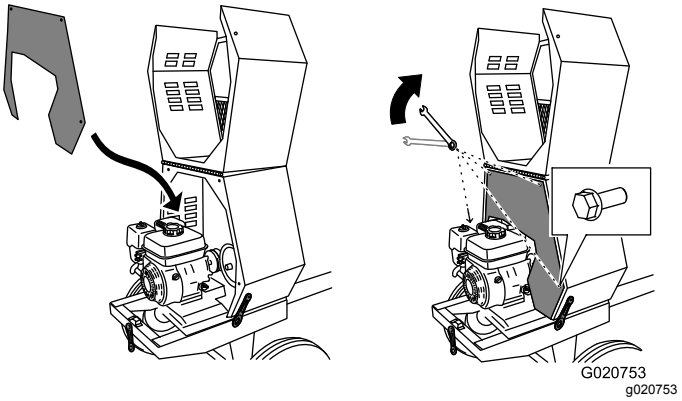

Figure 41

2. Align the bolt holes in the divider plate and the front cowl.
3. Install each of the 4 bolts, and hand-tighten them to prevent cross-threading.
4. Tighten the bolts with a wrench until they are secure.

Lubrication

Lubricating the Bearings and Seals

Service Interval: After each use—Lubricate the trunnions.

Monthly—Lubricate the pillow-block bearings.

Note: The pillow-block bearings are inside the cowl—remove the divider plate if equipped) to access them; refer to Removing the Divider Plate (page 28).

Grease Type: No. 2 lithium grease.

1. Complete the procedures listed in Preparing the Machine for Maintenance (page 28).
2. Clean the area around each grease fitting with a rag and lift the plastic cap off the grease fitting (Figure 42).

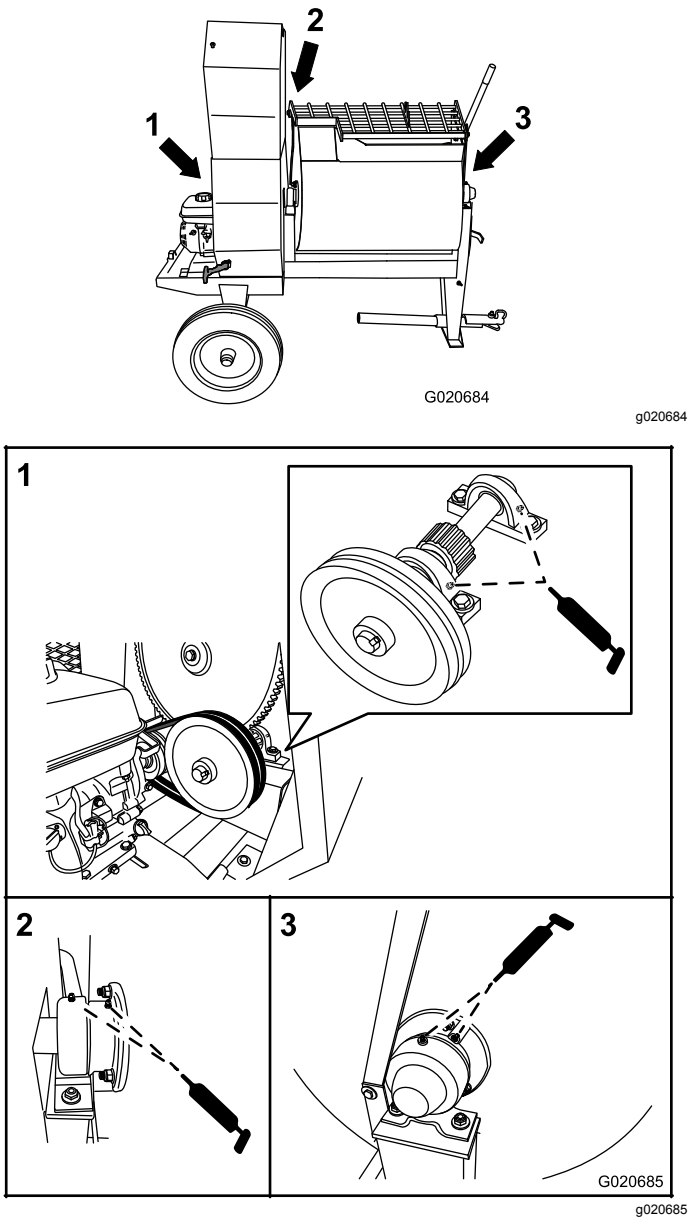

Figure 42

1. Pillow-block bearings
2. Rear trunnion
3. Front trunnion

3. Pump grease into each fitting as follows:
   - For the pillow-block bearings, pump 1 shot of grease into each fitting (Figure 42).
   - For the trunnions, pump several shots of grease into each fitting until it starts to ooze out of the bearing housing (Figure 42).

   Important: **Pump grease in slowly and carefully to prevent damage to the bearing seals.**
4. Wipe up any excess grease.

Engine Maintenance

Servicing the Air Cleaner

Service Interval: Before each use or daily—Inspect the air-cleaner elements.

Every 50 hours—Clean the air-cleaner elements. Clean them more frequently in dusty operating conditions.

Every 300 hours/Yearly (whichever comes first)—Replace the paper air-cleaner element. Replace it more frequently in dusty operating conditions.

Important: **Do not operate the engine without the air-filter assembly; extreme engine damage will occur.**

1. Shut off the engine and wait for all moving parts to stop.
2. Disconnect the wire from the spark plug; refer to Disconnecting the Spark-Plug Wire (page 28).
3. Remove the nut that secures the cover (Figure 43).

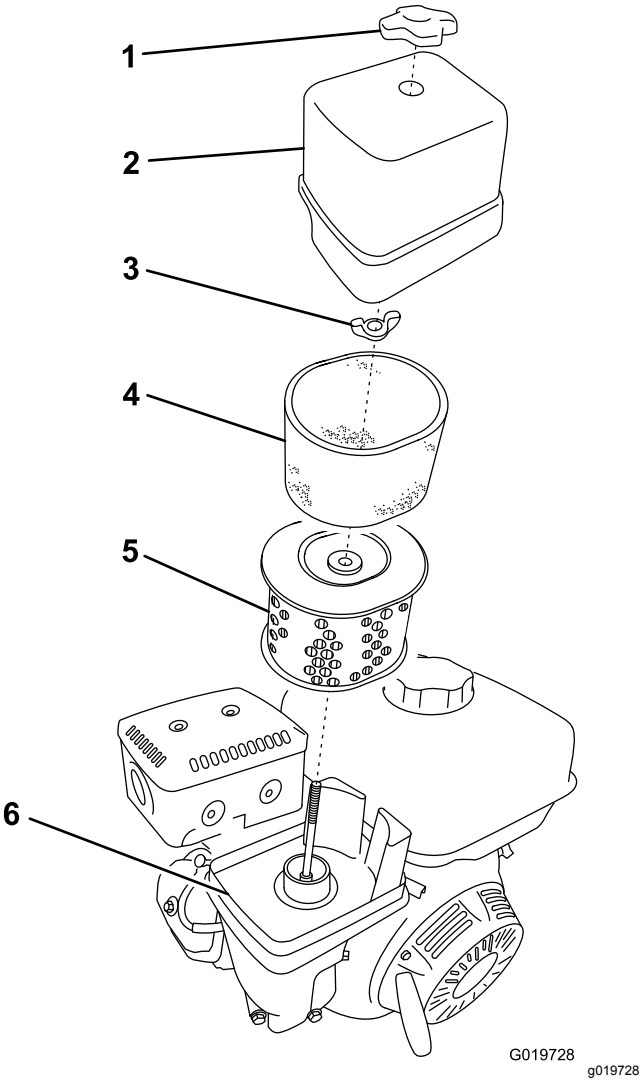

Figure 43

1.	Cover nut	4.	Foam element
2.	Cover	5.	Paper element
3.	Wing nut	6.	Base

4. Remove the cover.

   Note: Be careful to prevent dirt and debris from falling into the base.
5. Remove the foam and paper elements from the base (Figure 43).
6. Remove the foam element from the paper element (Figure 43).
7. Inspect the foam and paper elements and replace them if they are damaged or excessively dirty.

   Note: Never try to brush dirt off the paper element; brushing forces the dirt into the fibers.
8. Clean the foam element in warm, soapy water or in a **nonflammable** solvent.

   Note: Do not use fuel to clean the foam element because it could create a risk of fire or explosion.

9. Rinse and dry the foam element thoroughly.
10. Dip the foam element in clean engine oil, then squeeze out the excess oil.

    Note: Excess oil in the foam element restricts the air flow through the element and may reach the paper filter and clog it.
11. Wipe dirt from the base and the cover with a moist rag.

    Note: Be careful to prevent dirt and debris from entering the air duct leading to the carburetor.
12. Install the air-cleaner elements and ensure that they are properly positioned.
13. Securely install the cover with the nut.

Servicing the Engine Oil

Engine-Oil Specifications

Toro Premium Engine Oil is available from your Authorized Toro Dealer.

Important: **Use 4-cycle engine oil that meets or exceeds the requirements for API service category SJ, SL, SM, or higher.**

Model(s)	Crankcase Capacity
68013 and 68014	0.58 L (0.61 US qt)
68016, 68017, 68020, 68021, 68024	1.1 L (1.2 US qt)

Important: **If the oil level in the crankcase is too low or too high and you run the engine, you may damage the engine. This type of damage is not covered by the warranty.**

Note: Use SAE 10W-30 for general use. You can use the other viscosities shown in the chart when the average temperature in your area is within the indicated range (Figure 44).

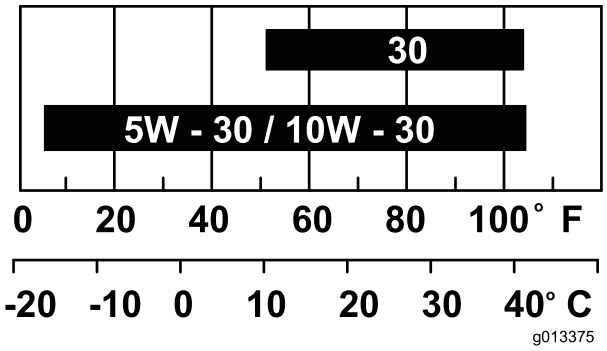

g013375

Figure 44

Checking the Engine-Oil Level

Service Interval: Before each use or daily

1. Park the machine on a level surface and shut off the engine.
2. Allow the engine to cool.
3. Disconnect the wire from the spark plug; refer to Disconnecting the Spark-Plug Wire (page 28).
4. Clean around the dipstick.
5. Check the oil level as shown in Figure 45.

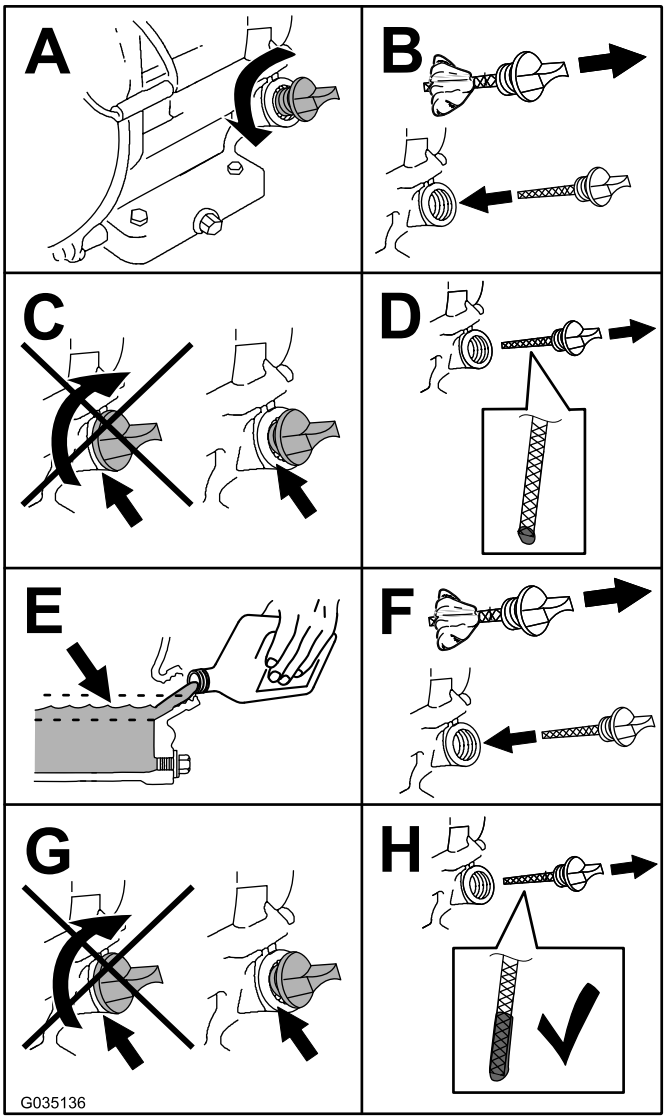

g035136

Figure 45

Changing the Engine Oil

Service Interval: After the first 25 hours

Every 100 hours

⚠ WARNING

Oil may be hot after the engine has been run, and contact with hot oil can cause severe personal injury.

Avoid contacting the hot engine oil when you drain it.

1. Shut off the engine and wait for all moving parts to stop.
2. Disconnect the wire from the spark plug; refer to Disconnecting the Spark-Plug Wire (page 28).
3. Place a drain pan under the oil-drain hole of the engine (Figure 46).

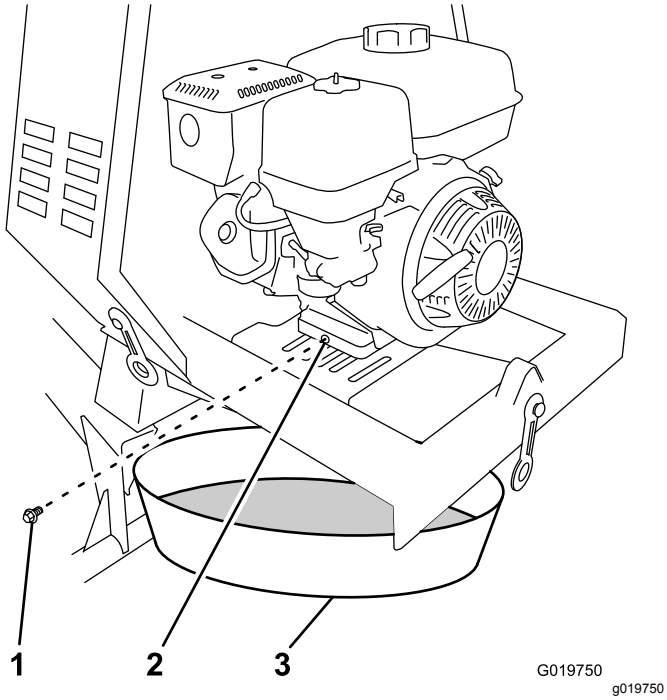

Figure 46

1. Oil-drain plug
2. Oil-drain hole
3. Oil-drain pan

4. Remove the drain plug and catch the oil in the oil-drain pan (Figure 46).
5. When the oil has drained completely, install the drain plug with a new washer (Figure 46).

   Note: Dispose of the used oil at a certified recycling center.

6. Remove the dipstick (Figure 47) and slowly pour oil into the fill hole until the oil reaches the upper-limit mark (bottom edge of the oil-fill hole) on the dipstick.

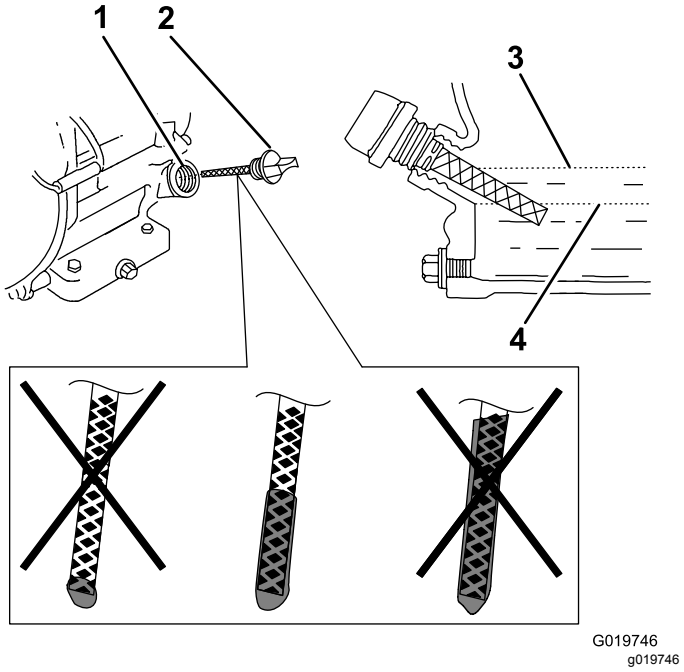

Figure 47

1. Oil-fill hole
2. Dipstick
3. Oil-level upper limit
4. Oil-level lower limit

7. Replace and secure the dipstick.
8. Wipe up any spilled oil.

Servicing the Spark Plug

Service Interval: Every 100 hours/Every 6 months (whichever comes first)—Check the spark plug.

Every 300 hours/Yearly (whichever comes first)—Replace the spark plug.

Spark Plug Specifications

Type: NGK BPR6ES or equivalent

Gap: 0.7 to 0.8 mm (0.028 to 0.031 inch)

Note: Use a 21 mm (13/16 inch) spark-plug wrench for removing and installing the spark plug.

Removing the Spark Plug

1. Park the machine on a level surface and shut off the engine.
2. Ensure that the machine surfaces are cool.
3. Pull the spark-plug wire off the terminal of the spark plug (Figure 48).

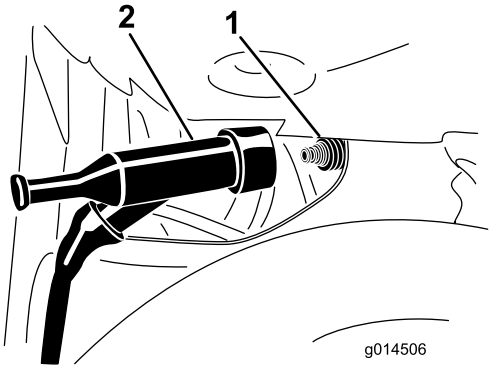

g014506

Figure 48

1. Spark plug
2. Wire

4. Clean around the spark plug.
5. Rotate the spark plug counterclockwise using a 21 mm (13/16 inch) spark-plug wrench to remove the plug and the sealing washer (Figure 49).

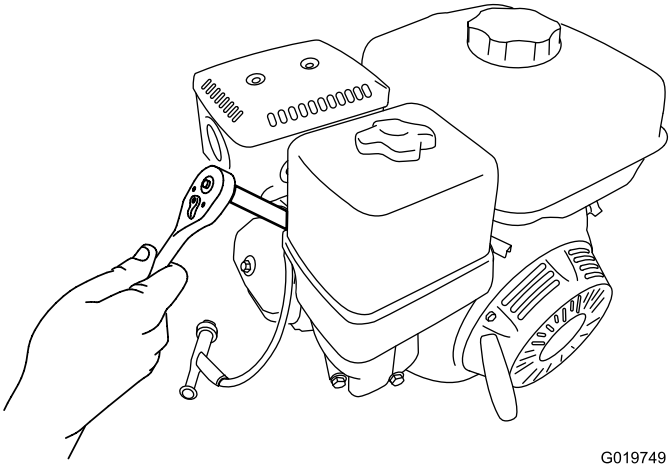

G019749
g019749

Figure 49

Checking the Spark Plug

Important: **Do not clean the spark plug. Always replace the spark plug when it has a black coating, worn electrodes, an oily film, or cracks.**

Note: If you see light brown or gray on the insulator, the engine is operating properly. A black coating on the insulator usually means that the air cleaner is dirty.

Set the gap to 0.7 to 0.8 mm (0.028 to 0.031 inch).

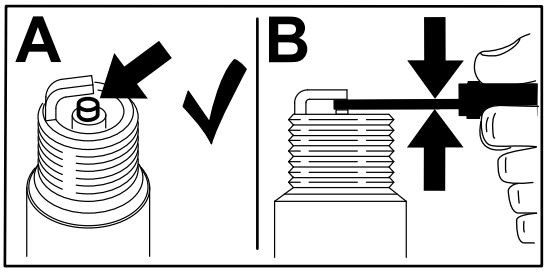

g206628

Figure 50

Installing the Spark Plug

Important: **Ensure that the gap between the side and center electrodes is correct before installing the spark plug.**

1. Thread the spark plug clockwise into the spark-plug hole by hand.

   Note: Avoid cross-threading the spark plug with the threads of the spark-plug hole.

2. Rotate the spark plug clockwise using a 21 mm (13/16 inch) spark-plug wrench until the plug and sealing washer are seated (Figure 49).

3. Tighten the spark plug as follows:

   - When installing an **in-service** spark plug, tighten the plug an additional 1/8 to 1/4 turn.
   - When installing a **new** spark plug, tighten the plug an additional 1/2 turn.

   Important: **A loose spark plug may cause the cylinder to overheat. An over-tight spark plug may damage the threads in the cylinder head.**

4. Push the spark-plug wire onto the terminal of the spark plug (Figure 48).

Cleaning the Spark Arrester

Service Interval: Every 100 hours

Note: A spark arrester is available as an option. If you require a spark arrester, contact your Authorized Service Dealer. Genuine Toro spark arresters are approved by the USDA Forestry Service.

⚠ WARNING

If the engine has been running, the muffler will be hot. Contact with hot surfaces may cause personal injury.

Keep your hands, feet, face, clothing and other body parts away from the muffler and other hot surfaces until they have cooled.

1. Park the machine on a level surface and shut off the engine.
2. Allow the engine to cool.
3. Disconnect the wire from the spark plug; refer to Disconnecting the Spark-Plug Wire (page 28).
4. Remove the divider plate (if equipped); refer to Removing the Divider Plate (page 28).
5. Remove the 2 nuts (8 mm) and remove the muffler from the cylinder (Figure 51).

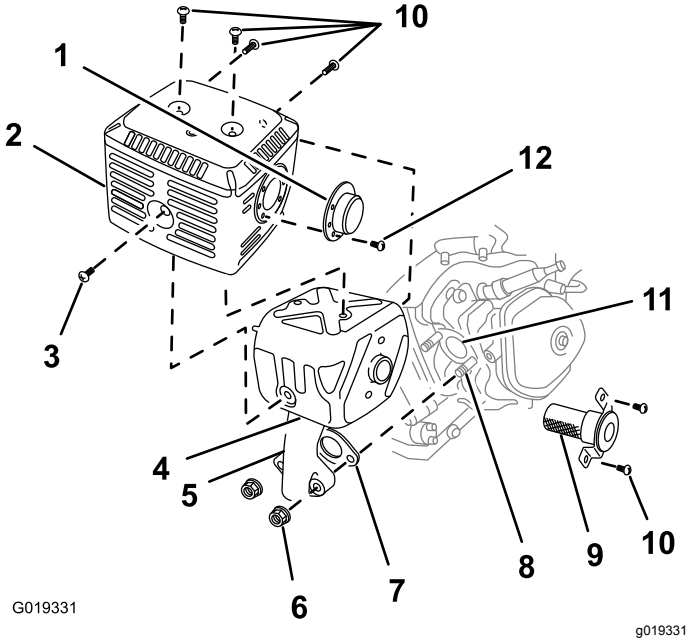

Figure 51

1.	Deflector (if applicable)	5.	Exhaust pipe	9.	Spark arrester
2.	Protector	6.	Nut (8 mm)	10.	Screws (5 mm)
3.	Screw (6 mm)	7.	Gasket	11.	Exhaust port
4.	Muffler	8.	Bolt (8 mm)	12.	Screw (4 mm)

6. Remove the 3 screws (4 mm) from the exhaust deflector, and remove the deflector (Figure 51).

7. Remove the screws (5 mm and 6 mm) from the muffler protector, and remove the muffler protector (Figure 51).
8. Remove the screws (4 mm) from the spark arrester, and remove the spark arrester from the muffler (Figure 51).
9. Use a brush to carefully remove carbon deposits from the spark-arrester screen (Figure 52).

   Note: Replace the spark arrester if it has breaks or holes.

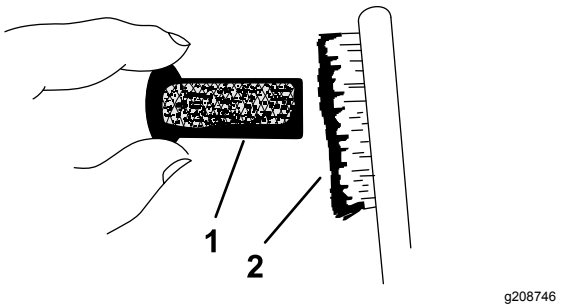

Figure 52

1. Screen
2. Brush

10. Install the spark arrester, muffler protector, exhaust deflector, and muffler in the reverse order of disassembly.
11. Install the divider plate (if equipped); refer to Installing the Divider Plate (page 28).

Removing and Installing the Engine

Belt-Drive Models Only

Removing the Engine

⚠ WARNING

The spring is under tension when installed and can cause personal injury.

Be careful when removing the spring.

1. Park the machine on a level surface and shut off the engine.
2. Allow the engine to cool.
3. Disconnect the wire from the spark plug; refer to Disconnecting the Spark-Plug Wire (page 28).
4. Remove the divider plate; refer to Removing the Divider Plate (page 28).
5. Remove the belt guide; refer to Removing the Belts (page 43).
6. Remove the belts; refer to Removing the Belts (page 43).
7. Using a spring-removal tool (Toro Part No. 92-5771), remove the spring from the anchor bracket on the engine deck (Figure 53).

   Note: Leave the other end of the spring attached to the frame of the machine.

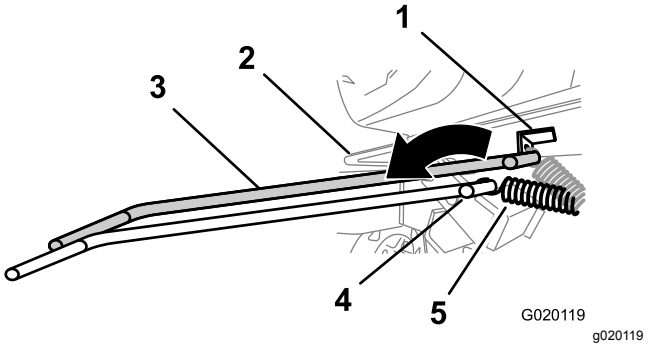

Figure 53

1. Anchor bracket
2. Engine deck
3. Spring-removal tool (Toro Part No. 92-5771)
4. Spring-removal tool (spring removed)
5. Spring (spring removed)

8. Remove the bolt and nut that secure the rear bracket for the engine deck hinge to the frame of the machine (Figure 54).

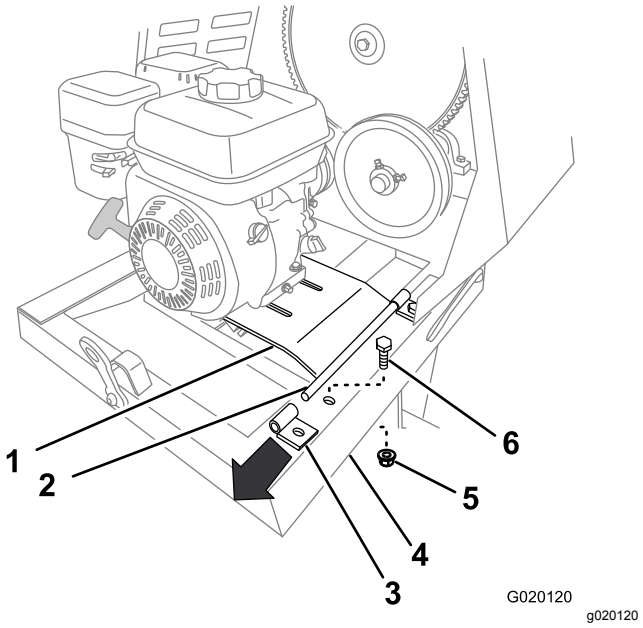

Figure 54

1. Engine deck
2. Pivot
3. Rear hinge bracket
4. Frame
5. Nut
6. Bolt

9. Lift up the rear edge of the engine deck and remove the hinge bracket (Figure 54).
10. Slide the engine deck rearward and out from the forward hinge bracket (Figure 55).

Note: Do not remove the forward hinge bracket.

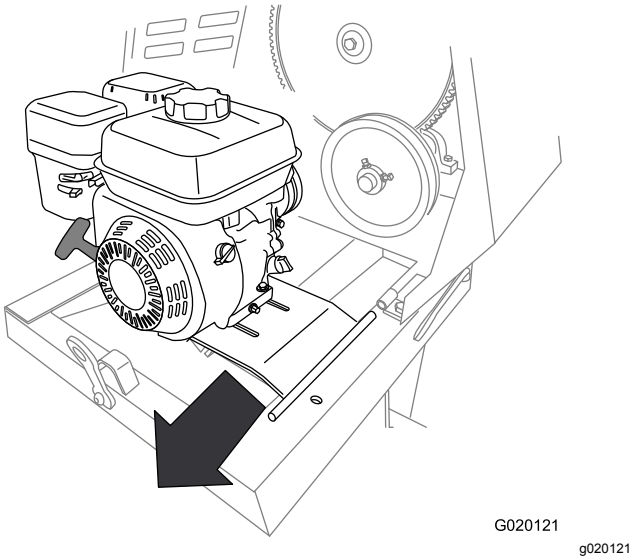

Figure 55

11. Remove the engine and engine deck from the machine (Figure 55).

Installing the Engine

1. Align the engine and engine deck to the rear frame of the machine.

   Note: The drive pulley on the engine must align forward.

2. Align the pivot on the engine deck with the forward hinge bracket (Figure 55).
3. Slide the engine deck forward and the pivot into the forward hinge bracket (Figure 55).
4. Align the rear hinge bracket with the pivot on the engine-deck hinge (Figure 55).
5. Lift up on the rear edge of the engine deck and slip the hinge bracket onto the pivot.
6. Secure the rear bracket to the frame of the machine using the bolt and nut (Figure 54) removed in step 8 of Removing the Engine (page 35).
7. Using a spring-removal tool (Toro Part No. 92-5771), install the tension spring to the anchor bracket on the engine deck (Figure 53).
8. Install the belts and belt guide; refer to Installing the Belts (page 43).
9. Adjust the belt guide; refer to Adjusting the Belt Guide (page 44).
10. Install the divider plate; refer to Installing the Divider Plate (page 28).

Fuel System Maintenance

Cleaning the Fuel-Sediment Cup

Service Interval: Every 100 hours/Every 6 months (whichever comes first)—Clean the fuel-sediment cup.

Yearly or before storage—Clean the fuel-sediment cup.

Underneath the fuel valve is a sediment cup to catch dirt in the fuel.

1. Park the machine on a level surface and shut off the engine.
2. Allow the engine to cool.
3. Disconnect the wire from the spark plug; refer to Disconnecting the Spark-Plug Wire (page 28).
4. Move the lever of the fuel valve to the OFF position, all the way to the left (Figure 56).
5. Unscrew the fuel-sediment cup (Figure 56).
6. Remove and retain the fuel filter and O-ring (Figure 56).

   Note: Do not clean the O-ring in solvent.

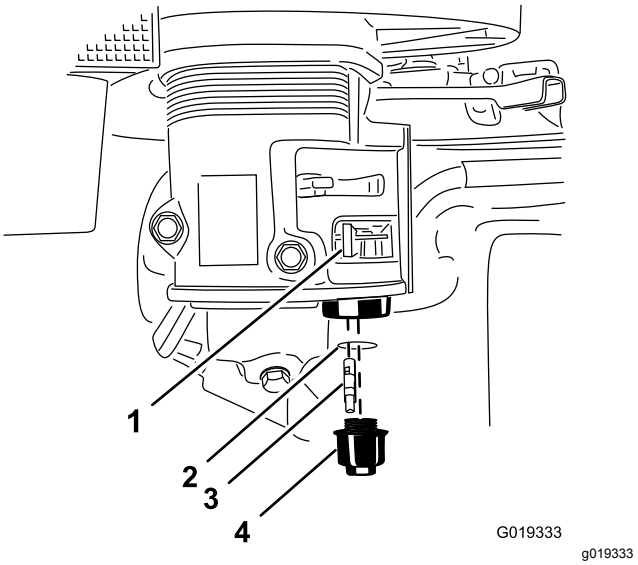

Figure 56

1. Fuel valve—OFF position
2. O-ring
3. Fuel filter
4. Fuel-sediment cup

7. Clean the fuel filter and sediment cup using a nonflammable solvent, and dry it carefully.
8. Wipe the O-ring with a clean, dry cloth.
9. Install the fuel filter in the bottom of the carburetor (Figure 56).

10. Align the O-ring in to the groove in the sediment cup and install the sediment cup to the fuel-valve housing.
11. Move the lever of the fuel valve to the ON position (all the way to the right) and check for leaks. If it leaks, replace the O-ring.

Draining the Fuel Tank

1. Remove the engine; refer to Removing the Engine (page 35).
2. Remove the fuel cap by rotating it counterclockwise (Figure 57).

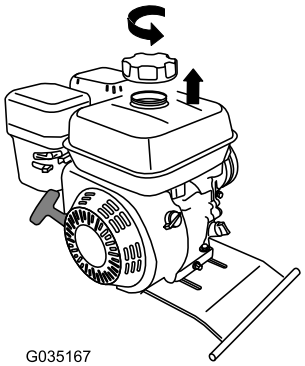

g035167

Figure 57

3. Align a drain pan to the hinge of the engine deck.
4. Rotate the engine on the hinge side of the engine deck and drain the fuel from the tank (Figure 58).

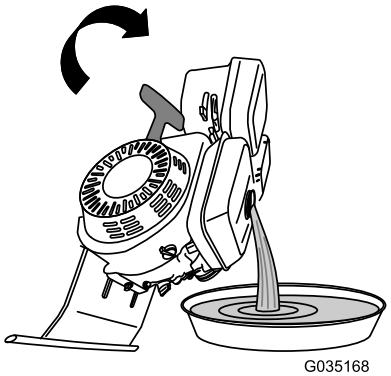

g035168

Figure 58

5. Carefully lower the engine and engine deck.
6. Install the fuel cap.
7. Install the engine; refer to Installing the Engine (page 36).

Drive System Maintenance

Tire Air Pressure

The following table shows the appropriate air pressure for the tires as installed at the factory.

Important: **Always check the information on the actual tires for the correct air pressure requirement.**

Model	Maximum Air Pressure
68013, 68014, 68016, and 68017	414 kPa (60 psi)
68020, 68021, and 68024	241 kPa (35 psi)

Inspecting the Tires

Service Interval: Before each use or daily

⚠ WARNING

Failure to maintain correct tire pressure may result in tire failure and loss of control, resulting in property damage and serious injury or death.

- **Check the tire pressure frequently to ensure proper inflation. If the tires are not inflated to the correct pressure, they will wear prematurely.**
- **Inspect the tire condition before towing and after any operating accident.**

The DOT tire information is located on the side of each tire. This information gives load and speed ratings. Replacement tires should have the same or better ratings

Note: Ensure that any tires installed on your machine meet or exceed the weight requirements of your machine as listed in Specifications (page 16).

1. Visually inspect the tires for damage and wear (Figure 59 and Figure 60).

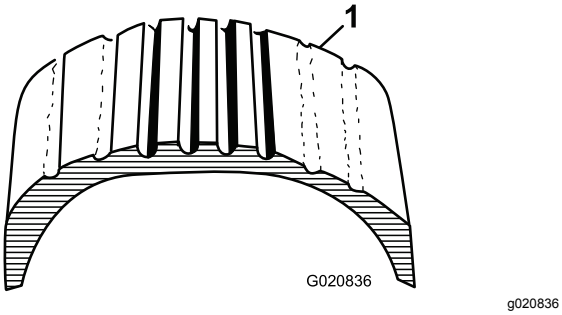

Figure 59

1. Example of tire wear caused by underinflation

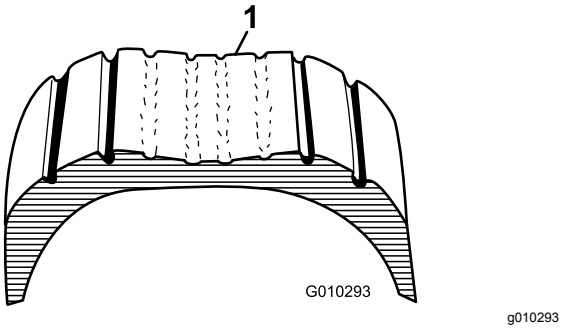

Figure 60

1. Example of tire wear caused by overinflation

2. Ensure that the tires are inflated to the correct air pressure; refer to Tire Air Pressure (page 37).

   Important: **The most common cause of tire trouble is under-inflation. Maintain full air pressure.**

Torquing the Wheel Lug Nuts

Service Interval: After each use

Torque the wheel lug nuts initially and after towing.

Torque the wheel lug nuts 108 to 122 N·m (80 to 90 ft-lb), in the sequence shown in Figure 61.

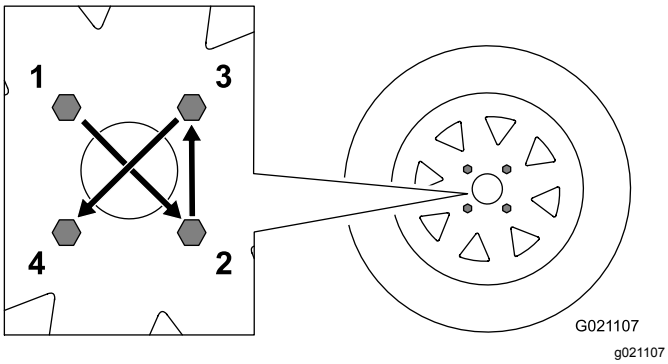

Figure 61

Servicing the Reduction Case

Models 68013 and 68014 Only

Important: **If the oil level in the reduction case is too low or too high and you run the engine, you may damage the engine or the reduction case. This type of damage is not covered by the warranty.**

Reduction-Case Oil Specifications

Oil type: 4-cycle, SAE 10W-30 motor oil

Oil API service category: SJ, SL, SM, or higher

Reduction-case capacity: 1.2 L (40 fl oz)

Checking the Reduction-Case Oil

Service Interval: Before each use or daily—Check the reduction-case oil (Models 68013 and 68014 only).

1. Park the machine on a level surface and shut off the engine.
2. Allow the engine to cool.
3. Disconnect the wire from the spark plug; refer to Disconnecting the Spark-Plug Wire (page 28).
4. Remove the divider plate; refer to Removing the Divider Plate (page 28).
5. Locate the reduction case between the engine and the engine pulley (Figure 62).

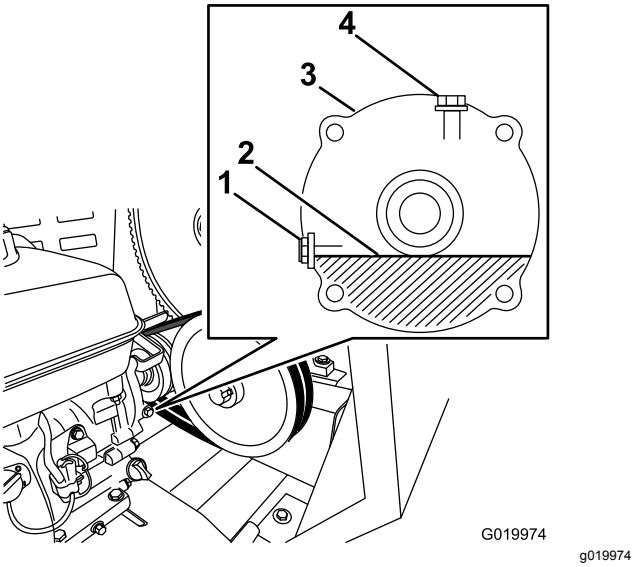

Figure 62

1. Oil-level-check bolt and washer
2. Oil level (normal)
3. Reduction case
4. Filler bolt and washer

6. Align a rag below the oil-level port in the side of the reduction case.
7. Remove the oil-level-check bolt and washer from the oil-level port (Figure 62).
   - If the oil level is below the threads in the oil-level port, add oil as follows:
     A. Remove the filler bolt and washer from the filler port on the top of the reduction case (Figure 62).
     B. Slowly pour the specified oil into the fill port until the oil level is level with the threads at the bottom of the oil-level port.
     C. Install the filler bolt and the washer to the filler port of the reduction case, and tighten the filler bolt (Figure 62).
   - If the oil level is too high, allow the oil to flow out until it is flush with the threads at the bottom of the oil-level port.
8. When the oil is level is flush with the threads at the bottom of the oil-level port, install the oil-level-check bolt and washer to the port, and tighten the bolt (Figure 62).
9. Install the divider plate; refer to Installing the Divider Plate (page 28).

Changing the Reduction-Case Oil

Service Interval: After the first 20 hours—Change the reduction-case oil (Models 68013 and 68014 only).

Every 100 hours/Every 6 months (whichever comes first)—Change the reduction-case oil (Models 68013 and 68014 only).

1. Park the machine on a level surface and shut off the engine.
2. Allow the engine to cool.
3. Disconnect the wire from the spark plug; refer to Disconnecting the Spark-Plug Wire (page 28).
4. Remove the engine; refer to Removing the Engine (page 35).
5. Drain the fuel tank; refer to Draining the Fuel Tank (page 37).
6. Remove the filler bolt and washer from the filler port on the top of the reduction case (Figure 63).

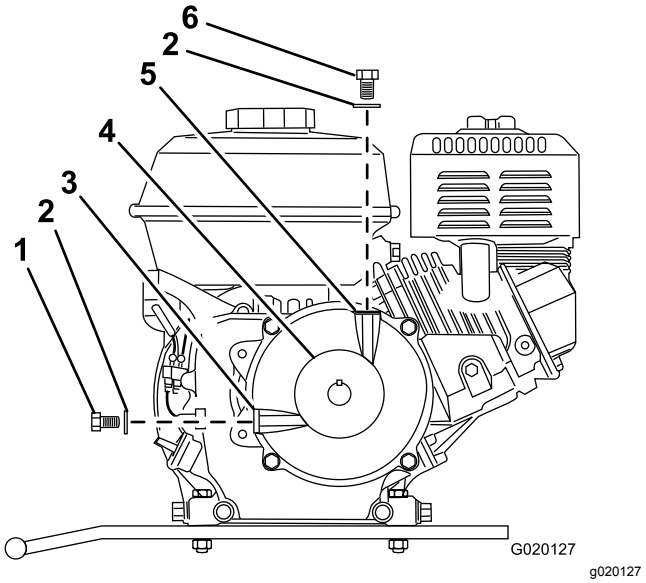

Figure 63

1.	Oil-level-check bolt	3.	Oil-level port	5.	Filler port
2.	Washer	4.	Pulley	6.	Filler bolt

7. Remove the oil-level-check bolt and washer from the oil-level port in the side of the reduction case (Figure 63).
8. Align a drain pan to the hinge of the engine deck (Figure 64).

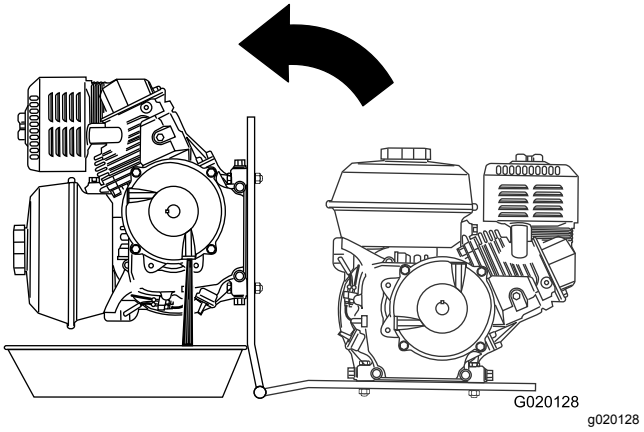

Figure 64

9. Rotate the engine on the hinge side of the engine deck, and drain the oil from the reduction case (Figure 64).
10. Carefully lower the engine and engine deck.
11. Slowly pour the specified oil into the fill port until the oil level is level with the threads at the bottom of the oil-level port (Figure 62).
12. Install the oil-level-check bolt and washer to the oil-level port of the reduction case, and tighten the bolt (Figure 63).

13. Install the filler bolt and washer to the filler port of the reduction case and tighten the filler bolt (Figure 63).
14. Install the engine; refer to Installing the Engine (page 36).

Servicing the Gearbox

Gearbox Models Only

Checking the Clutch Operation

Service Interval: Before each use or daily (gearbox model only).

After the first 25 hours (gearbox model only).

Important: **Check the gearbox clutch if the paddles rotate when the clutch lever is in the OFF position, if the paddles rotate slowly, or if the clutch begins to slip.**

1. Move the clutch lever to the OFF position.
2. Start the engine.
3. Ensure that the engine throttle is set to the 2/3 position.
4. If the paddles rotate with the clutch lever to the OFF position do the following:
   A. Shut off the engine.
   B. Locate the clutch lever at the back of the machine; refer to Clutch Lever (page 14).
   C. Move the clutch lever to the OFF position.
   D. Attach a spring scale with a range of 15 to 30 kg (35 to 55 lb) to the grip of the clutch lever (Figure 65).

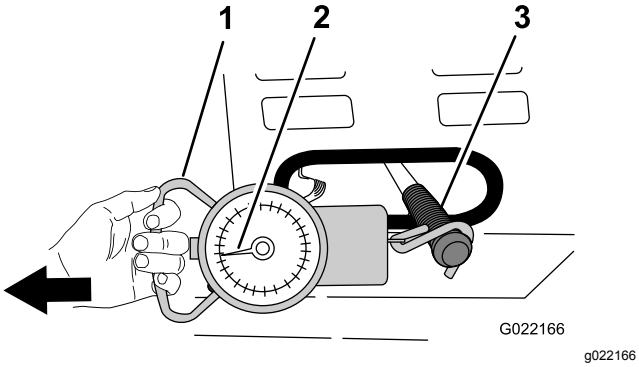

Figure 65

1. Spring scale
2. 15 to 30 kg (35 to 55 lb)
3. Clutch lever

   E. Using the spring scale, pull the clutch handle to the ON position as shown in Figure 65.
   F. Observe the spring scale while pulling to see what the highest pressure is when moving the clutch handle from the OFF position to the ON position (Figure 65).

   Note: Normal clutch pressure is 15 to 30 kg (35 to 55 lb).

   G. If the clutch pressure is **greater than** or **less than** 15 to 30 kg (35 to 55 lb), contact an Authorized Toro Service Dealer.

Gearbox-Oil Specifications

Oil type: SAE 90 gear oil

Gearbox capacity: 2.13 L (72 fl oz)

Checking the Gearbox Oil

Service Interval: Every 40 hours (gearbox model only).

Important: **If the oil level in the gearbox is too low or too high and you run the engine, you may damage the engine or the gearbox. This type of damage is not covered by the warranty.**

1. Park the machine on a level surface and shut off the engine.
2. Allow the engine to cool.
3. Disconnect the wire from the spark plug; refer to Disconnecting the Spark-Plug Wire (page 28).
4. Locate the gearbox between the engine and the front cowl.
5. At the right side of the gearbox, examine the oil level in the sight glass (Figure 66).

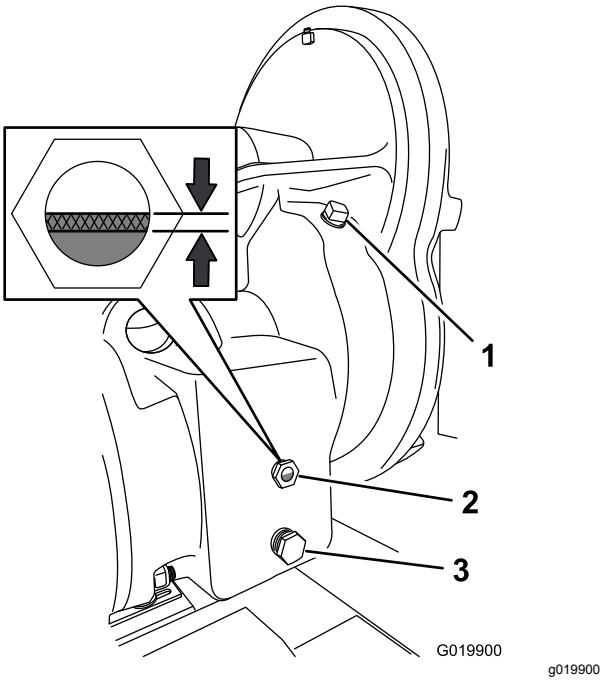

Figure 66

1. Fill plug
2. Sight glass
3. Drain plug

6. If the oil level is below the bottom 1/3 of the sight glass, add oil as follows:
   A. Remove the fill plug from the fill port in the housing of the gearbox (Figure 66).
   B. Slowly pour the specified oil into the fill port until the oil level is between 1/3 and 1/2 of the sight glass (Figure 66).
   C. Clean the fill plug.
   D. Apply PTFE thread-sealing tape to the threads of the plug.
   E. Install the plug into the fill port in the housing (Figure 66).

Replacing the Gearbox Oil

Service Interval: Every 800 hours (gearbox models only).

1. Park the machine on a level surface and shut off the engine.
2. Allow the engine to cool.
3. Disconnect the wire from the spark plug; refer to Disconnecting the Spark-Plug Wire (page 28).
4. Align a drain pan with a 2.8 L (3 US qt) capacity under the drain plug (Figure 66).
5. Remove the drain plug from the drain port and completely drain the gearbox oil (Figure 66).
6. Remove the fill plug (Figure 66).
7. Clean the drain and fill plugs and apply PTFE thread-sealing tape to the plug threads.
8. Install the drain plug in the drain port (Figure 66).
9. Slowly pour the specified oil into the fill port until the oil level is between 1/3 and 1/2 of the sight glass (Figure 66).
10. Install the fill plug in the fill port (Figure 66).

Belt Maintenance

Inspecting the Belts

Service Interval: After the first 25 hours—Inspect the belts and adjust as necessary (belt-drive models only).

Every 40 hours—Inspect the belts and adjust as necessary (belt-drive models only).

1. Park the machine on a level surface and shut off the engine.
2. Allow the machine to cool.
3. Disconnect the wire from the spark plug; refer to Disconnecting the Spark-Plug Wire (page 28).
4. Remove the divider plate; refer to Removing the Divider Plate (page 28).
5. Move the clutch lever to the OFF position.
6. Examine the belts for wear or damage. If the belts are worn or damaged, replace them; refer to Replacing the Belts (page 43).
7. Examine the pulleys for wear, damage, and misalignment; refer to Aligning the Pulleys (page 45).
8. Install the divider plate; refer to Installing the Divider Plate (page 28).

Adjusting the Belt Tension

Clutch air gap: 2.5 to 6.5 mm (3/32 to 1/4 inch)

1. Park the machine on a level surface and shut off the engine.
2. Allow the machine to cool.
3. Disconnect the wire from the spark plug; refer to Disconnecting the Spark-Plug Wire (page 28).
4. Move the clutch lever to the ON position.
5. Measure the air gap between the engine deck and the roller on the clutch (Figure 67).

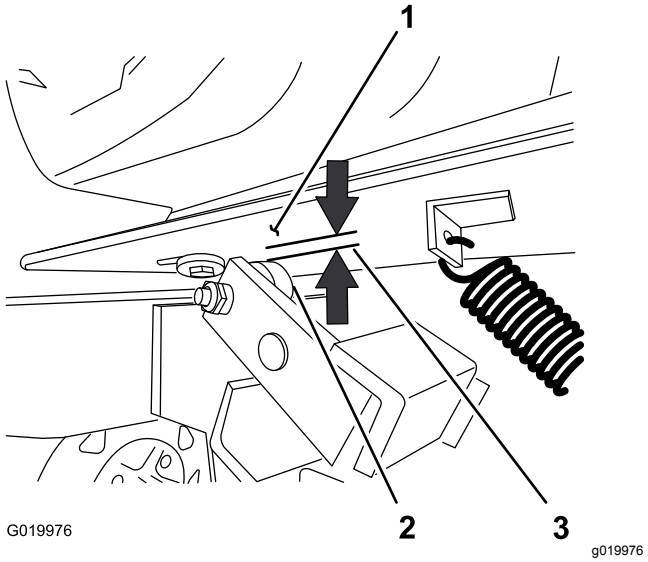

Figure 67

1. Engine deck
2. Clutch roller
3. Clutch air gap: 2.5 to 6.5 mm (3/32 to 1/4 inch)

6. If the measured air gap is not within the specified range, adjust the gap as follows:
   A. Move the clutch lever to the OFF position.
   B. Loosen the nuts and bolts that secure the engine to the engine deck (Figure 68).

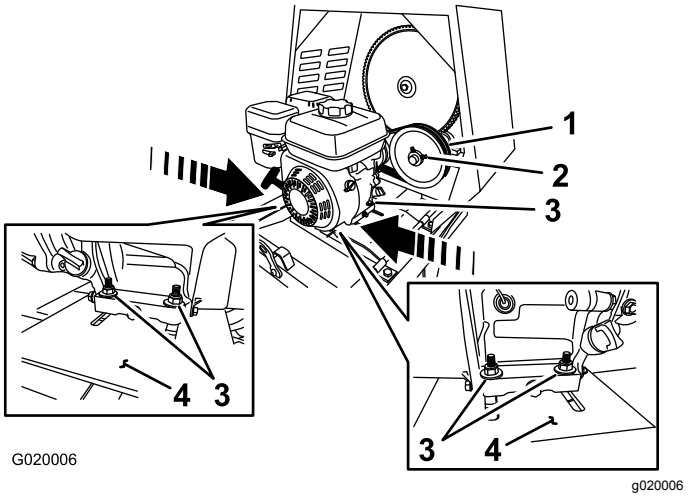

Figure 68

1. Idler pulley
2. Setscrew
3. Nut and bolt
4. Engine deck

   C. Move the engine position as follows:
      - **Increase the air gap**—move the engine **away** from the idler pulley (Figure 68).
      - **Decrease the air gap**—move the engine **toward** the idler pulley (Figure 68).
   D. Align a straightedge across the engine pulley and the idler pulley (Figure 69).

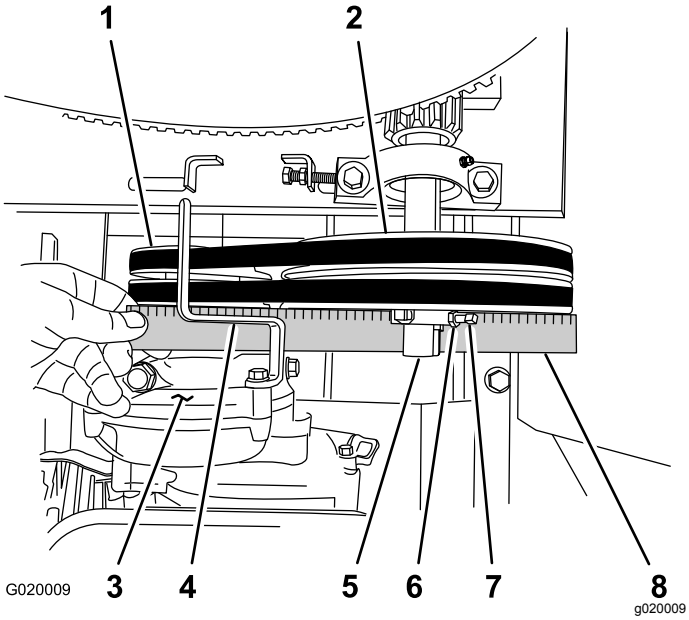

Figure 69

1. Engine pulley
2. Idler pulley
3. Reduction case (engine)
4. Belt guide
5. Idler shaft
6. Jam nut
7. Setscrew
8. Straightedge

E. If necessary, pivot the engine on the engine deck until the engine pulley and idler pulley are aligned to the straightedge (Figure 69).

F. Tighten the nuts and bolts that secure the engine to the engine deck to a torque of 18 N·m (13 ft-lb).

G. Check the air gap between the engine deck and the roller on the clutch. If the air gap is not within the specified range, repeat step 6 until the air gap measurement is within the specified range.

H. Install the divider plate; refer to Installing the Divider Plate (page 28).

Important: **Ensure that the paddles do not rotate when the clutch lever is in the OFF position.**

Replacing the Belts

Service Interval: Every 2 years (belt-drive models only).

Removing the Belts

1. Park the machine on a level surface and shut off the engine.
2. Allow the machine to cool.
3. Disconnect the wire from the spark plug; refer to Disconnecting the Spark-Plug Wire (page 28).
4. Move the clutch lever to the OFF position.
5. Remove the divider plate; refer to Removing the Divider Plate (page 28).
6. Remove the bolt that secures the belt guide to the engine, and remove the belt guide (Figure 70).

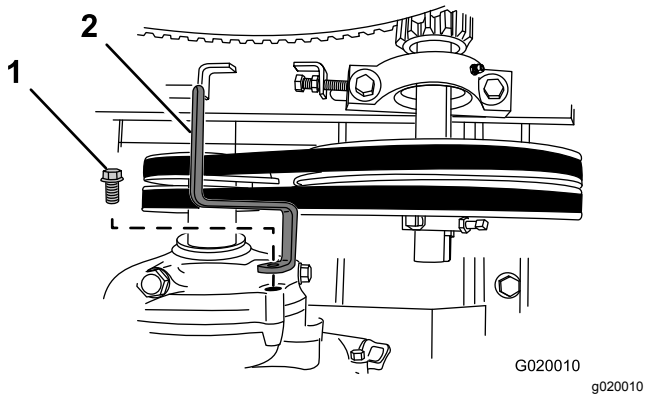

Figure 70

1. Bolt
2. Belt guide

7. Slip the forward belt forward and off the idler pulley (Figure 71).

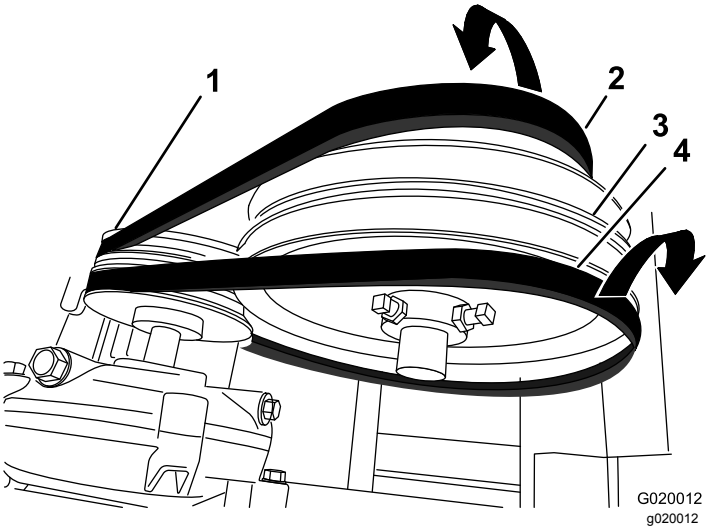

Figure 71

1. Engine pulley
2. Forward belt
3. Idler pulley
4. Rear belt

8. Slip the rear belt rearward and off the idler pulley (Figure 71).
9. Slip the belts off the engine pulley.
10. Remove the belts from the machine.

Installing the Belts

1. Park the machine on a level surface and shut off the engine.
2. Allow the machine to cool.

3. Disconnect the wire from the spark plug; refer to Disconnecting the Spark-Plug Wire (page 28).
4. Ensure that the clutch lever is in the OFF position.
5. Align the rear belt to the rear groove in the engine pulley.

   Note: Do not align the rear belt to the idler pulley.
6. Align the forward belt to the forward groove of the idler pulley.
7. Slip the rear belt over the idler pulley and align the belt to the rear pulley groove.
8. Slip the forward belt over the engine pulley and align the belt to the forward pulley groove.
9. Check the belt tension; refer to step 4 through 6 in Adjusting the Belt Tension (page 42).
10. Loosely secure the belt guide to the engine (Figure 70) with the bolt that was removed in step 6 of Removing the Belts (page 43).
11. Adjust the belt guide; refer to Adjusting the Belt Guide (page 44).
12. Install the divider plate; refer to Installing the Divider Plate (page 28).

Adjusting the Belt Guide

Note: To access the belt guide, remove the divider plate; refer to Removing the Divider Plate (page 28).

Guide air gap: 2.5 to 4.0 mm (3/32 to 5/32 inch)

1. Park the machine on a level surface and shut off the engine.
2. Allow the machine to cool.
3. Disconnect the wire from the spark plug; refer to Disconnecting the Spark-Plug Wire (page 28).
4. Ensure that the clutch lever is in the ON position.
5. Ensure that the belt tension is correct; refer to Adjusting the Belt Tension (page 42).
6. Check that the air gap between the belt guide and the belts is 2.5 to 4.0 mm (3/32 to 5/32 inch); refer to Figure 72.

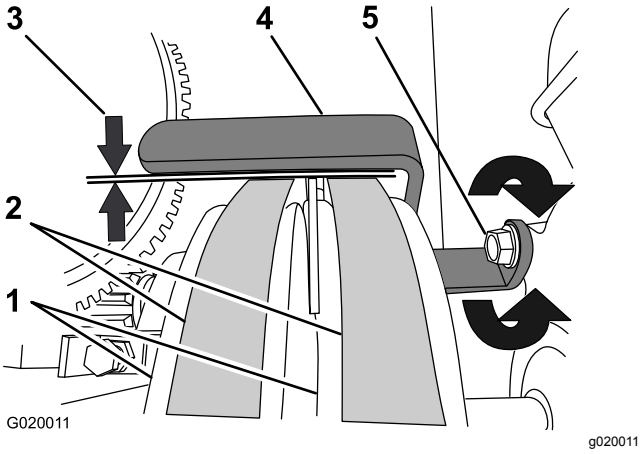

Figure 72

1. Engine pulleys
2. Belts
3. Guide air gap: 2.5 to 4.0 mm (3/32 to 5/32 inch)
4. Belt guide
5. Bolt

7. If the air gap is not within the specified range, do the following:
   A. Loosen the bolt that secures the belt guide to the engine (Figure 72).

      Important: **Ensure that the belt guide is toward the engine pulley.**

   B. Rotate the belt guide up or down until there is an air gap of 2.5 to 4.0 mm (3/32 to 5/32 inch) between the guide and each belt (Figure 72).

      Important: **The belt guide should not contact the belts with the clutch lever in the ON position.**

      Note: If the air gap between the belt guide and both belts cannot be attained, then 1 of the belts is too long.

   C. Tighten the bolt that secures the belt guide to the engine (Figure 72).
   D. Check the clutch operation; refer to Checking the Clutch Operation (page 44).
8. Install the divider plate; refer to Installing the Divider Plate (page 28).

Checking the Clutch Operation

Service Interval: Every 40 hours

Important: **The paddles must not rotate in an empty drum when the clutch lever is in the OFF position.**

1. Move the clutch lever to the OFF position.
2. Start the engine.
3. If the paddles rotate with the clutch lever to the OFF position do the following:

A. Shut off the engine.

B. Check the air gap between the belt guide and the belts.

Note: If the air gap is larger than 4.0 mm (5/32 inch), decrease the gap between the belt guide and the belts; refer to Adjusting the Belt Guide (page 44).

4. Repeat steps 1 through 3 until all the following conditions are met:
   - The engine is run at 2/3 throttle.
   - The clutch lever is in the OFF position.
   - The paddles do not rotate in an empty drum while the engine is running.

Aligning the Pulleys

1. Park the machine on a level surface and shut off the engine.
2. Allow the machine to cool.
3. Disconnect the wire from the spark plug; refer to Disconnecting the Spark-Plug Wire (page 28).
4. Remove the divider plate; refer to Removing the Divider Plate (page 28).
5. Place a straightedge across the face of the engine pulley and idler pulley (Figure 73).

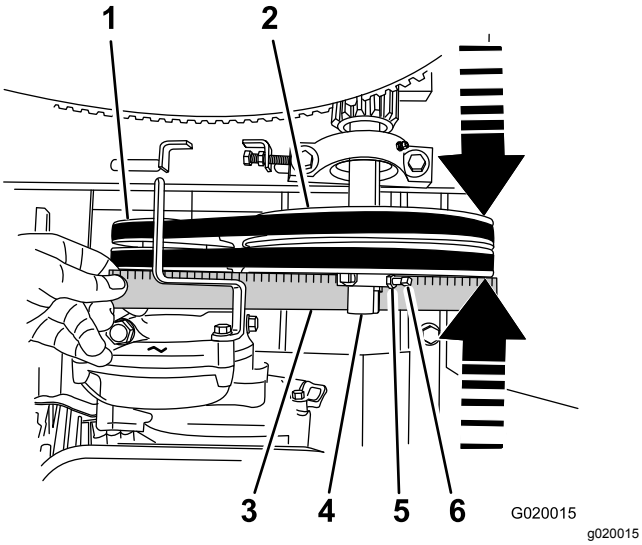

Figure 73

1.	Engine pulley	4.	Idler shaft
2.	Idler pulley	5.	Locknut
3.	Straightedge	6.	Set screw

Note: Both pulleys must be aligned flush with the straightedge.

6. If the pulleys are not aligned do the following:

   A. Move the clutch lever to the OFF position.

   B. Loosen the locknuts and setscrews that secure the idler pulley to the idler shaft (Figure 73).

   C. Using a soft-face mallet, tap the idler pulley forward or backward along the idler shaft until the engine pulley and idler pulley are aligned to the straight edge (Figure 73).

   D. Tighten the set screws and locknuts that secure the idler pulley to the idler shaft (Figure 73).

7. Install the divider plate; refer to Installing the Divider Plate (page 28).

Paddle Maintenance

Adjusting the Paddle Blades

1. Park the machine on a level surface and shut off the engine.
2. Allow the engine to cool.
3. Disconnect the wire from the spark plug; refer to Disconnecting the Spark-Plug Wire (page 28).
4. Remove the nuts and bolts that secure the grate to the drum, and remove the grate (Figure 74, Figure 75, or Figure 76).

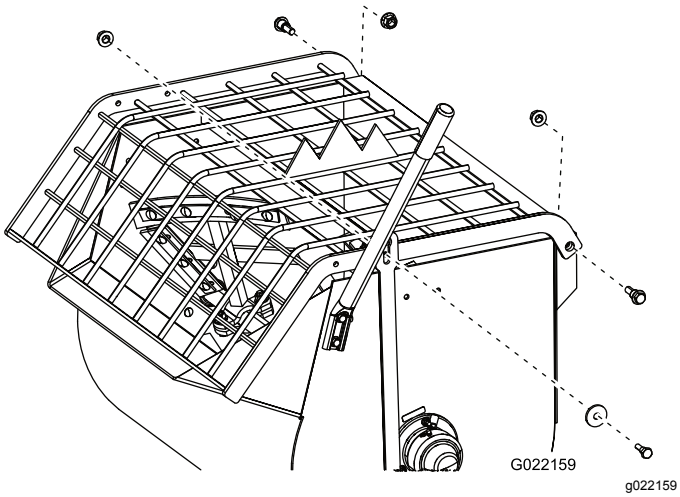

Figure 74
Models 68013, 68016, 68020

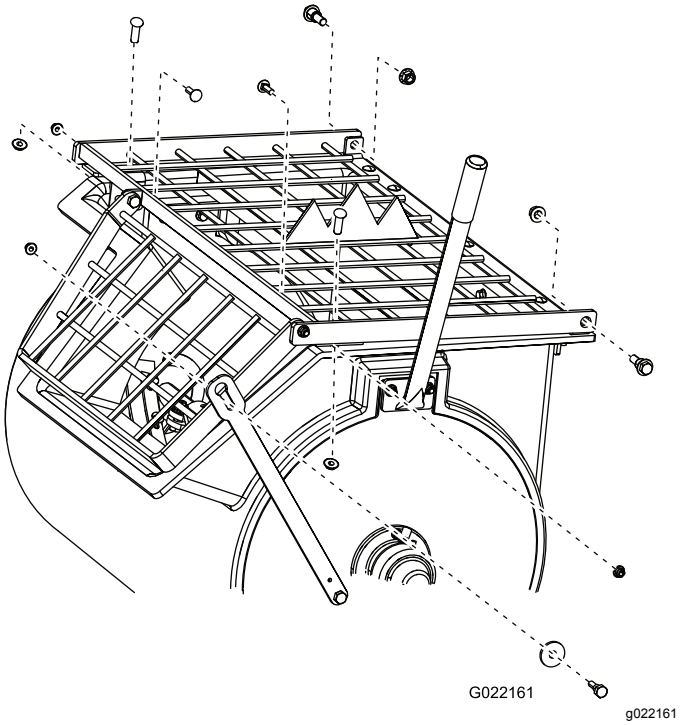

Figure 75
Models 68014, 68017, 68021

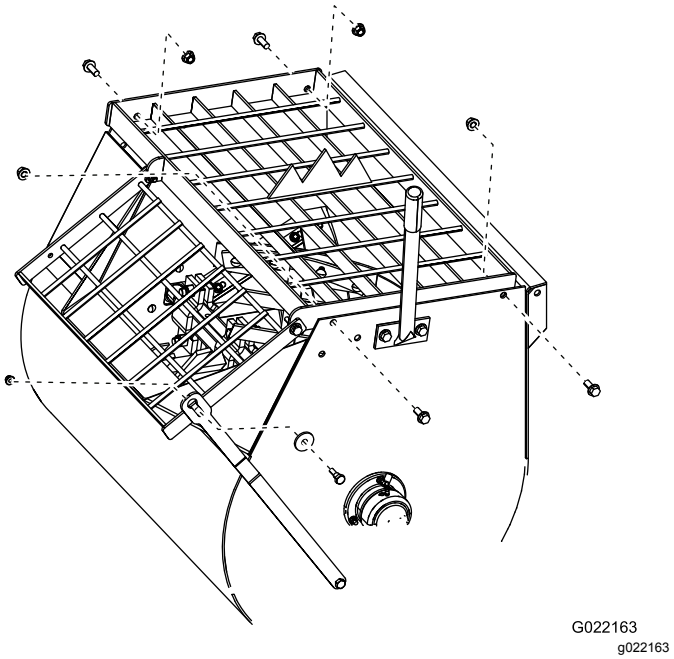

Figure 76
Model 68024

5. Loosen the carriage bolts and nuts that secure the wipers to the paddle bladess (Figure 77).

   Note: If necessary, tip the drum to the dump position to access the paddles.

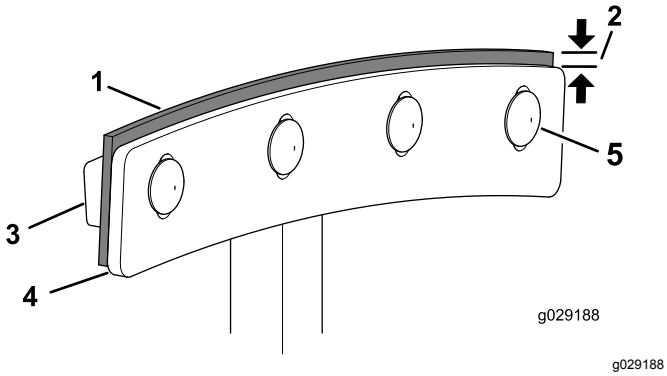

Figure 77

1. Wiper
2. 3 to 6 mm (1/8 to 1/4 inch)
3. Wiper bar
4. Paddle blade
5. Carriage bolt

6. Adjust the rubber wipers to be close to the drum wall and position the metal paddle blades so that the outer edge is 3 to 6 mm (1/8 to 1/4 inch) from the outer edge of the wipers (Figure 77). Tighten the nuts and bolts to secure the blades to the paddles.

   Note: Ensure that the clutch lever is in the OFF position and rotate the paddles as needed.

7. Install the grate with the nuts and bolts that you removed in step 4, and tighten the nuts and bolts until they are secure.

Cleaning

Cleaning the Machine

Regular cleaning and washing with mild detergent and water increases the life span of the machine. Clean the machine after each use before the dirt hardens.

Remove dirt and grime from the external parts of the entire machine, especially the engine. Clean dirt and concrete materials from the outside of the engine.

Ensure that the fuel cap and the oil-fill cap/dipstick are secure to avoid getting water in the engine.

Use care when using a high-pressure sprayer because it can damage the safety decals, instruction signs, and the engine.

Important: **Lubricate the bearings and seals after cleaning; refer to Lubricating the Bearings and Seals (page 29).**

Storage

For storage over 30 days, prepare the machine as follows:

1. Remove dirt and grime from the external parts of the entire machine, especially the engine. Clean dirt and debris from the outside of the engine cylinder-head fins and blower housing.

   Important: **You can wash the machine with mild detergent and water.**

2. Condition the fuel system as follows:

   A. Add a petroleum-based stabilizer/conditioner to fuel in the tank. Follow the mixing instructions from the stabilizer manufacturer. **Do not** use an alcohol-based stabilizer (ethanol or methanol).

   Important: **Do not store stabilizer/conditioned fuel over 90 days.**

   Note: Fuel stabilizer/conditioner is most effective when mixed with fresh fuel and used at all times.

   B. Run the engine for 5 minutes to distribute the conditioned fuel through the fuel system.

   C. Shut off the engine, allow it to cool, and drain the fuel tank using a pump-type siphon. Dispose of fuel properly; recycle it according to local codes.

   D. Start the engine and run it until it stops.

   E. Choke the engine.

   F. Start and run the engine until it does not start again.

3. Clean the sediment cup; refer to Cleaning the Fuel-Sediment Cup (page 36).

4. Service the air cleaner; refer to Servicing the Air Cleaner (page 30).

5. Change the engine oil; refer to Changing the Engine Oil (page 31).

6. Remove the spark plug and check the condition; refer to Servicing the Spark Plug (page 33).

7. Condition the engine as follows:

   A. Pour 2 tablespoons of engine oil into the spark-plug hole; refer to Removing the Spark Plug (page 33).

   B. Pull the recoil-start handle slowly to crank the engine and distribute the oil inside the cylinder.

   C. Install the spark plug; refer to Installing the Spark Plug (page 34).

   Note: Do not install the wire on the spark plug.

8. Grease the machine; refer to Lubricating the Bearings and Seals (page 29).

9. Check and tighten all bolts, nuts, and screws. Repair or replace any part that is damaged.

10. Paint all scratched or bare metal surfaces with paint available from your Authorized Service Dealer.

11. Store the machine in a clean, dry garage or storage area.

12. Cover the machine to protect it and keep it clean.

Troubleshooting

Problem	Possible Cause	Corrective Action
The engine does not start.	1. The fuel-valve lever is in the OFF position. 2. The choke is closed 3. The choke is open. 4. The engine On/Off switch is in the OFF position. 5. The engine oil level is low (engines with the oil-level switch). 6. The fuel tank is empty. 7. The engine contains bad/old fuel. 8. The spark plug is fouled or improperly gapped. 9. The spark plug is wet with fuel (flooded engine). 10. The spark-plug wire is loose or disconnected.	1. Move the fuel-valve lever to the ON position. 2. Open the choke when starting a hot engine. 3. Close the choke when starting a cold engine. 4. Rotate the switch to the ON position. 5. Fill the engine, with the recommended oil, to the proper level. 6. Fill the fuel tank with fresh fuel. 7. Drain the fuel tank and carburetor. Refuel with fresh fuel. 8. Gap or replace the spark plug. 9. Remove the spark plug, dry it, and install the plug. Start the engine with the throttle in the MAX position. 10. Remove the spark-plug wire, clean the spark-plug terminal and the terminal socket in the boot of the spark-plug wire, and install the spark-plug wire.
The engine lacks power or runs rough.	1. The air filter is restricted. 2. The engine contains bad or old fuel. 3. There is water or contamination in the fuel. 4. The fuel line is restricted. 5. The choke is closed 6. The spark plug is worn or has buildup on the electrodes. 7. There is too much oil in the engine crankcase.	1. Clean or replace the air-filter element(s). 2. Drain the fuel tank and carburetor. Refuel with fresh fuel. 3. Drain the fuel tank and carburetor. Refuel with fresh fuel. 4. Clean the fuel filter and sediment cup. 5. Open the choke. 6. Check the electrode gap and adjust or replace the spark plug. 7. Drain the oil to the proper level.
The belts slip or come off the pulleys (belt-drive models only).	1. The belt tension is insufficient. 2. The belts are worn. 3. The pulley(s) are worn. 4. The pulley(s) are misaligned.	1. Adjust the belt tension. 2. Replace the belts. 3. Contact your Authorized Service Dealer. 4. Align the pulley(s).
The paddles rotate when the clutch lever is in the OFF position (belt-drive models only).	1. The clutch lever is not adjusted correctly. 2. The belt guide is not adjusted correctly.	1. Adjust the belt tension. 2. Adjust the belt guide.
The paddles rotate when the clutch lever is in the OFF position (gearbox model only).	1. The clutch is not adjusted correctly.	1. Contact your Authorized Service Dealer.
The paddles do not rotate when the clutch lever is in the ON position (belt-drive models only).	1. The clutch lever is not adjusted correctly. 2. The paddles are stuck in the drum	1. Adjust the belt tension. 2. Clean the paddles and drum.
The paddles do not rotate when the clutch lever is in the ON position (gearbox model only).	1. The clutch is not adjusted correctly.	1. Contact your Authorized Service Dealer.

Problem	Possible Cause	Corrective Action
The paddles rotate slowly when the clutch lever is in the ON position (belt-drive models only).	1. The clutch lever is not adjusted correctly.	1. Adjust the belt tension.
The paddles rotate slowly when the clutch lever is in the ON position (gearbox model only).	1. The clutch is not adjusted correctly.	1. Contact your Authorized Service Dealer.

California Proposition 65 Warning Information

What is this warning?

You may see a product for sale that has a warning label like the following:

WARNING: Cancer and Reproductive Harm—www.p65Warnings.ca.gov.

What is Prop 65?

Prop 65 applies to any company operating in California, selling products in California, or manufacturing products that may be sold in or brought into California. It mandates that the Governor of California maintain and publish a list of chemicals known to cause cancer, birth defects, and/or other reproductive harm. The list, which is updated annually, includes hundreds of chemicals found in many everyday items. The purpose of Prop 65 is to inform the public about exposure to these chemicals.

Prop 65 does not ban the sale of products containing these chemicals but instead requires warnings on any product, product packaging, or literature with the product. Moreover, a Prop 65 warning does not mean that a product is in violation of any product safety standards or requirements. In fact, the California government has clarified that a Prop 65 warning "is not the same as a regulatory decision that a product is 'safe' or 'unsafe.'" Many of these chemicals have been used in everyday products for years without documented harm. For more information, go to https://oag.ca.gov/prop65/faqs-view-all.

A Prop 65 warning means that a company has either (1) evaluated the exposure and has concluded that it exceeds the "no significant risk level"; or (2) has chosen to provide a warning based on its understanding about the presence of a listed chemical without attempting to evaluate the exposure.

Does this law apply everywhere?

Prop 65 warnings are required under California law only. These warnings are seen throughout California in a wide range of settings, including but not limited to restaurants, grocery stores, hotels, schools, and hospitals, and on a wide variety of products. Additionally, some online and mail order retailers provide Prop 65 warnings on their websites or in catalogs.

How do the California warnings compare to federal limits?

Prop 65 standards are often more stringent than federal and international standards. There are various substances that require a Prop 65 warning at levels that are far lower than federal action limits. For example, the Prop 65 standard for warnings for lead is 0.5 µg/day, which is well below the federal and international standards.

Why don't all similar products carry the warning?

- Products sold in California require Prop 65 labelling while similar products sold elsewhere do not.
- A company involved in a Prop 65 lawsuit reaching a settlement may be required to use Prop 65 warnings for its products, but other companies making similar products may have no such requirement.
- The enforcement of Prop 65 is inconsistent.
- Companies may elect not to provide warnings because they conclude that they are not required to do so under Prop 65; a lack of warnings for a product does not mean that the product is free of listed chemicals at similar levels.

Why does Toro include this warning?

Toro has chosen to provide consumers with as much information as possible so that they can make informed decisions about the products they buy and use. Toro provides warnings in certain cases based on its knowledge of the presence of one or more listed chemicals without evaluating the level of exposure, as not all the listed chemicals provide exposure limit requirements. While the exposure from Toro products may be negligible or well within the "no significant risk" range, out of an abundance of caution, Toro has elected to provide the Prop 65 warnings. Moreover, if Toro does not provide these warnings, it could be sued by the State of California or by private parties seeking to enforce Prop 65 and subject to substantial penalties.

Concrete, Masonry, and Compaction Equipment

The Toro Warranty

A limited warranty (see warranty periods below)

Conditions and Products Covered

The Toro Company and its affiliate, Toro Warranty Company, pursuant to an agreement between them, jointly warrant your Toro Concrete, Masonry, and Compaction Equipment Products listed below to be free from defects in materials or workmanship.

This warranty covers the cost of parts and labor, but you must pay transportation costs.

The following time periods apply from the date of purchase:

Products	Warranty Period
Concrete Mixers	1 year
• Spindle Bearings	Lifetime* (original owner only)
Mortar Mixers	1 year
• Drum Bearings and Seals	Lifetime* (original owner only)
Forward Plate Compactors	2 years
Reversible Plates	1 year
Rammer Compactors	2 years
Mud Buggy	1 year
Vibrating Trench Roller	2 years
Concrete Saws	1 year
Masonry Saws	1 year
Power Trowels	1 year
Screeds	1 year
Concrete Vibrators	1 year

Where a warrantable condition exists, we will repair the Product at no cost to you including diagnosis, labor, and parts.

*Lifetime Warranty - If the bearing(s) or seal(s) on your mixer fail, it will be replaced under warranty, at no cost for parts or labor.

Instructions for Obtaining Warranty Service

If you think that your Toro Product contains a defect in materials or workmanship, follow this procedure**:

1. Contact any Authorized Servicing Outlet to arrange service at their dealership. To locate one convenient to you, access our website at www.Toro.com. Select “Where to Buy” and select “Contractor” under product type. You may also call our toll free number below.
2. Bring the product and your proof of purchase (sales receipt) to them.
3. If for any reason you are dissatisfied with the Service Outlet’s analysis or with the assistance provided, contact us at:

   SWS Customer Care Department
   Toro Warranty Company
   8111 Lyndale Avenue South
   Bloomington, MN 55420-1196
   Toll Free: 800-888-9926

**Toro Authorized Rental Customers who have purchased products directly from Toro and have signed the Toro Rental Customer Agreement have the ability to perform their own warranty work. Please visit Toro’s Rental Portal for electronic warranty clam filing procedures or call the toll free number above.

Owner Responsibilities

You must maintain your Toro Product by following the maintenance procedures described in the *Operator’s Manual*. Such routine maintenance, whether performed by a dealer or by you, is at your expense. Parts scheduled for replacement as required maintenance (“Maintenance Parts”), are warranted for the period of time up to the scheduled replacement time for that part. Failure to perform required maintenance and adjustments can be grounds for disallowing a warranty claim.

Items and Conditions Not Covered

Not all product failures or malfunctions that occur during the warranty period are defects in materials or workmanship. This express warranty does not cover the following:

- Product failures which result from the use of non-Toro replacement parts, or from installation and use of add-on, modified, or unapproved accessories
- Product failures which result from failure to perform required maintenance and/or adjustments
- Product failures which result from operating the Product in an abusive, negligent or reckless manner
- Parts subject to consumption through use unless found to be defective. Examples of parts which are consumed, or used up, during normal product operation include, but are not limited to, belts, wipers, spark plugs, tires, filters, gaskets, wear plates, seals, O-rings, drive chains, clutches.
- Failures caused by outside influence. Items considered to be outside influence include, but are not limited to, weather, storage practices, contamination, use of unapproved coolants, lubricants, additives, or chemicals, etc.
- Normal “wear and tear” items. Normal “wear and tear” includes, but is not limited to, worn painted surfaces, scratched decals, etc.
- Repairs necessary due to failure to follow recommended fuel procedure (consult *Operator's Manual* for more details)
  - Removing contaminants from the fuel system is not covered
  - Use of old fuel (more than one month old) or fuel which contains more than 10% ethanol or more that 15% MTBE
  - Failure to drain the fuel system prior to any period of non-use over one month
- Any component covered by a separate manufacturer’s warranty
- Pickup and delivery charges

General Conditions

Repair by an Authorized Servicing Outlet or Self-Service as an Authorized Rental Customer is your sole remedy under the warranty.

Neither The Toro Company nor Toro Warranty Company is liable for indirect, incidental or consequential damages in connection with the use of the Toro Products covered by this warranty, including any cost or expense of providing substitute equipment or service during reasonable periods of malfunction or non-use pending completion of repairs under this warranty. All implied warranties of merchantability and fitness for use are limited to the duration of this express warranty. Some states do not allow exclusions of incidental or consequential damages, or limitations on how long an implied warranty lasts, so the above exclusions and limitations may not apply to you.

This warranty gives you specific legal rights, and you may also have other rights which vary from state to state.

Except for the engine warranty coverage and the Emissions warranty referenced below, if applicable, there is no other express warranty. The Emissions Control System on your Product may be covered by a separate warranty meeting requirements established by the U.S. Environmental Protection Agency (EPA) or the California Air Resources Board (CARB). Refer to the California Emission Control Warranty Statement supplied with your Product or contained in the engine manufacturer’s documentation for details.

Countries Other than the United States or Canada

Customers who have purchased Toro products outside the United States or Canada should contact their Toro Distributor (Dealer) to obtain guarantee policies for your country, province, or state. If for any reason you are dissatisfied with your Distributor's service or have difficulty obtaining guarantee information, contact the Toro importer. If all other remedies fail, you may contact us at Toro Warranty Company.

Australian Consumer Law: Australian customers will find details relating to the Australian Consumer Law either inside the box or at your local Toro Dealer.