Form No. 3422-550 Rev A

Trans Pro 100 Tow-Behind Trailer

Model No. 04240—Serial No. 402990001 and Up

Installation Instructions

Safety

Safety and Instructional Decals

Safety decals and instructions are easily visible to the operator and are located near any area of potential danger. Replace any decal that is damaged or missing.

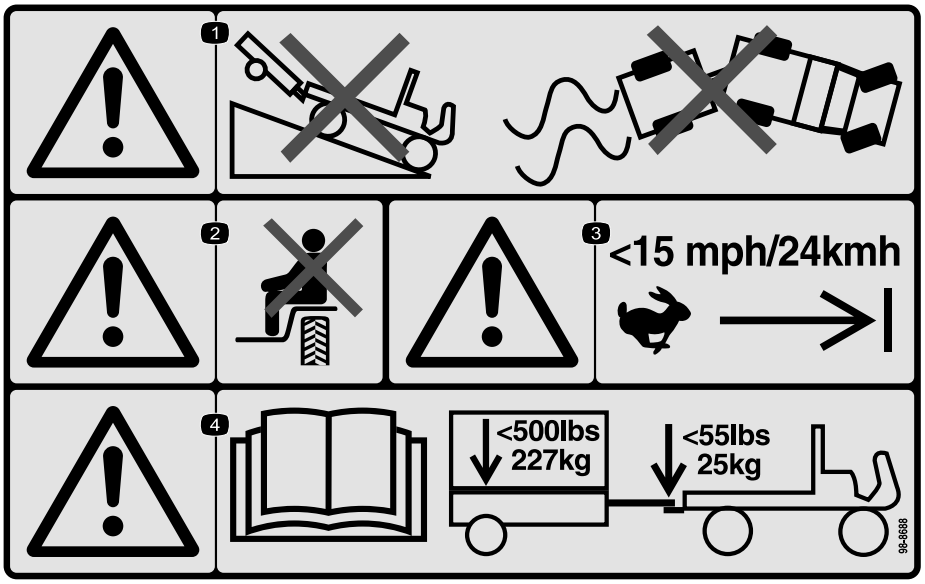

decal98-8688

98-8688

1. Warning—do not drive the vehicle with a trailer down a hill; do not lose control of the vehicle and trailer.
2. Warning—do not carry passengers.
3. Warning—do not exceed 24 km/h (15 mph).
4. Warning—read the *Operator's Manual*; the maximum trailer weight is 227 kg (500 lb) and the maximum tongue weight is 25 kg (55 lb).

© 2018— The Toro® Company
8111 Lyndale Avenue South
Bloomington, MN 55420

Register at www.Toro.com.

CE

Original Instructions (EN)
Printed in the USA
All Rights Reserved

3422-550 A

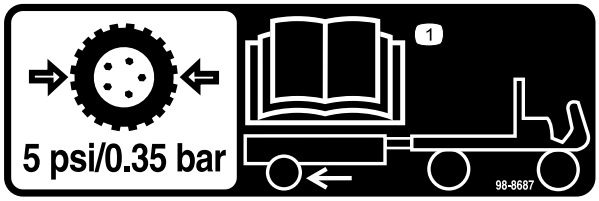

decal98-8687

98-8687

1. The trailer tires should be inflated to 0.35 bar (5 psi); read the *Operator's Manual*.

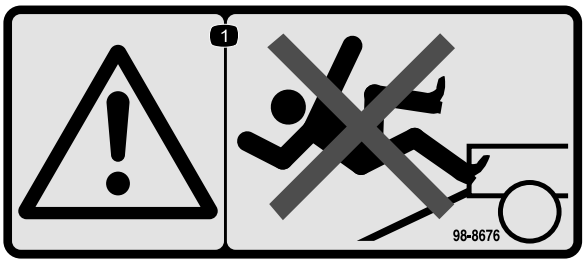

decal98-8676

98-8676

1. Warning—do not climb the ramp, you could slip and fall.



decal133-8061

133-8061

Installation

Assembling the Trailer

1. Mount the tongue assembly to the mounting bracket on the underside of the trailer bed with 2 bolts (3/8 x 2-3/4 inches) and 2 locknuts (Figure 1).

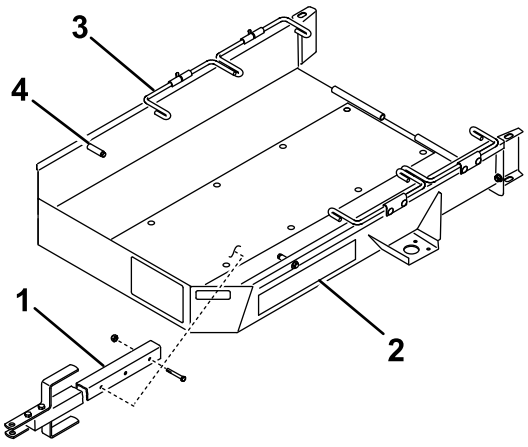

g233569

Figure 1

1. Tongue assembly
2. Trailer bed
3. Wheel rod
4. Stop

2. Using the 4 carriage bolts and 4 locknuts, mount an axle to the top side of the mounting brackets on each side of the trailer bed as shown in Figure 2.

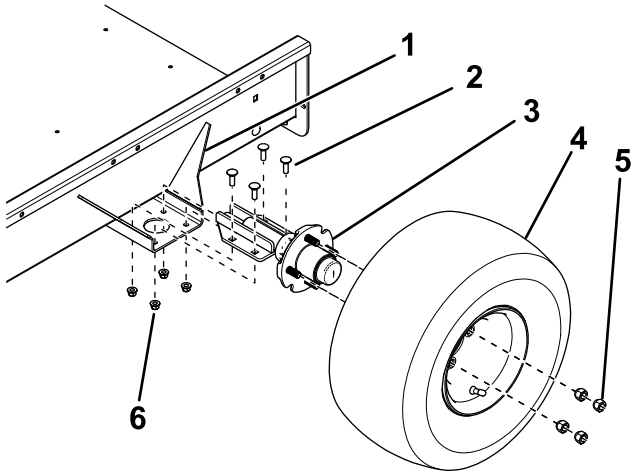

g246924

Figure 2

1. Mounting bracket
2. Carriage bolt
3. Axle
4. Wheel assembly
5. Lug nut
6. Locknut

3. Mount a wheel assembly to each axle hub with 4 lug nuts (Figure 2) and tighten the nuts to 80 ft-lb (108.5 N·m).
4. Deflate the tires to 5 psi (34 kPa).

5. Mount the trailer ramp to the rear of the trailer bed with the hinge rod and 2 cotter pins (Figure 3).

   Note: Apply a light coating of grease to the hinge rod prior to assembly.

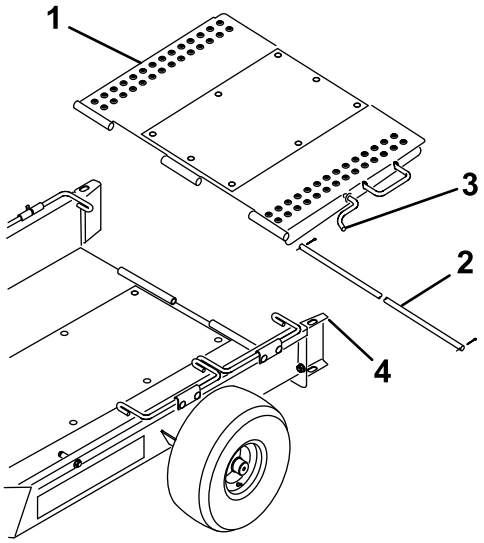

g233570

Figure 3

1. Trailer ramp
2. Hinge rod
3. Ramp latch
4. Wheel guide

6. Pivot the trailer ramp upward and hook the ramp latch into the hole in the top of the wheel guide (Figure 3).

Adjusting the Wheel Toe-in

To prevent premature wear of the tires, the wheels should have 0 to 3 mm (0 to 1/8 inch) toe-in.

Adjust the wheel-toe in as follows:

1. Draw a line around the center of each tire.
2. Measure the center-to-center distance at the wheel hub height, at the front and rear of the tires (Figure 4).

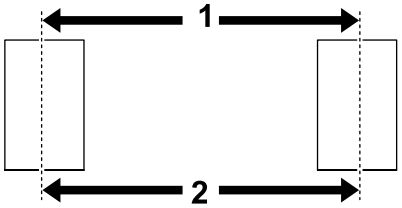

g012164

g012164

Figure 4

1. Front center-to-center distance
2. Rear center-to-center distance

3. Adjust the position of the axle mounting brackets so that the front center-to-center distance is about 3 mm (1/8 inch) less than the rear center-to-center distance (Figure 2).

Adjusting Trailer Tongue

Move the spacers to the top or bottom of the tongue until the trailer is parallel to the ground or until it fits the tow vehicle hitch (Figure 5).

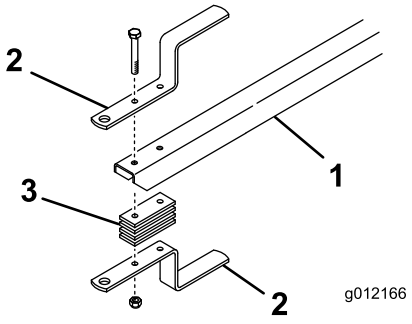

g012166

g012166

Figure 5

1. Trailer tongue
2. Trailer hitch
3. Hitch spacer

Loading the Trailer

1. Unhook the ramp latch from the wheel guide and lower the ramp to ground.
2. Pivot the first set of wheel rods upward.
3. Remove the baskets from the machine to be towed and disengage the reel drive.
4. Move the throttle to the slowest position and **slowly** drive the machine onto the trailer until the transport wheels contact the trailer stops (Figure 1).
5. Shut off the engine and engage the parking brake.
6. Pivot the first set of wheel rods downward behind the transport wheels (Figure 1).
7. Repeat this procedure if you are hauling 2 machines.

   Note: Use the first set of wheel rods as the stop for the second machine (Figure 6).

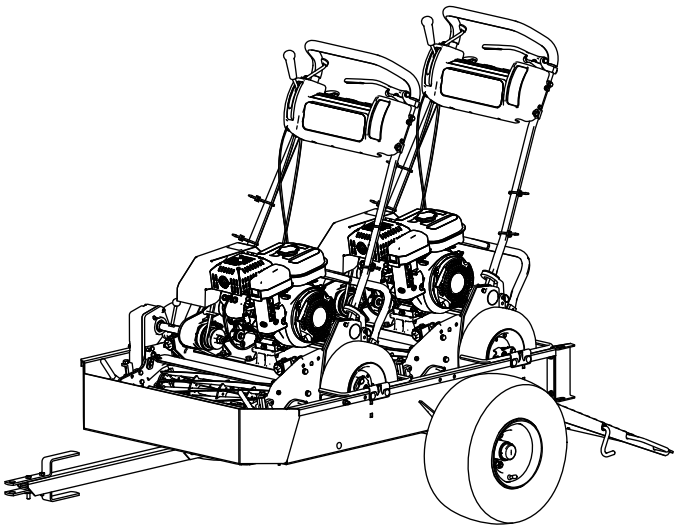

g216504

Figure 6

8. Pivot the trailer ramp upward and hook the ramp latch into the hole in the top of the wheel guide (Figure 3).
9. Store the baskets in the tow vehicle.

Operation

Compatible Machines

This trailer supports a variety of walk behind Greensmaster machines, see the following lists for more detail.

Important: **This trailer is designed to transport walk-behind Greensmaster mowers only. Hauling other products may damage the trailer.**

- Machines that you can tow without modification
  - Greensmaster 1000
  - Greensmaster 1010
  - Greensmaster 2000
  - Greensmaster Flex 21
  - Greensmaster Flex 2100
  - Greensmaster Flex 2120
  - Greensmaster eFlex 2100
  - Greensmaster eFlex 2120
- Machines that you can tow only with the 18-inch conversion kit installed
  - Greensmaster 800
  - Greensmaster Flex 18
  - Greensmaster Flex 1800
  - Greensmaster Flex 1820
  - Greensmaster eFlex 1800
  - Greensmaster eFlex 1820
- Machines that you can tow only with the transport axles removed
  - Greensmaster 1600
  - Greensmaster 1610
  - Greensmaster 2600

Important: **Use only a tow vehicle with the proper tow rating. The trailer and 2 machines weigh approximately 363 kg (800 lb).**

Ensure that the tow vehicle has adequate braking and handling capacity by checking the recommendations of the vehicle manufacturer.

Operating Tips

- Ensure that the trailer is properly connected to the tow vehicle before loading or unloading the machines to prevent the tongue from suddenly moving or flipping up.
- The trailer adds extra towing weight to the vehicle. Drive the vehicle safely.
  - Do not drive the machine on highways or public roads.
  - Always **slow** the tow vehicle when approaching and while making a turn.
  - Always **slow** the tow vehicle when driving in unfamiliar areas or over rough terrain.
  - Always **slow** the tow vehicle when changing the direction of travel or preparing to stop.
  - Always **slow** the tow vehicle when turning or driving on slopes.
  - **Do not** make sudden or sharp turns. **Do not** suddenly change direction of travel on an incline, ramp, grade, slope, or similar surface.
  - Always adjust the tow vehicle speed to allow for existing ground conditions, such as wet slick surfaces, loose sand or gravel, and/or low-visibility conditions, such as dim or bright lighting, fog, mist, or rain.
  - Be especially careful when driving a heavily loaded vehicle down an incline or slope. Drive the vehicle up and down the face of the slopes, inclines, or grades whenever possible. **Do not** drive across the face of a slope if at all possible. There is a risk of upsetting the vehicle, which can result in serious injury or death.
- Before backing up, look behind you and ensure that it is clear of people and objects. Back up slowly and watch the trailer movement closely.
- Use extreme caution and slow speed when backing up the trailer and tow vehicle.
- Watch out for traffic when near or crossing roads. Always yield the right of way to pedestrians and other vehicles.
- If the trailer begins to vibrate abnormally, stop the tow vehicle immediately. Shut off the tow vehicle engine. Repair all damage before towing.
- Before servicing or making any adjustments to the trailer, do the following:
  - Stop the tow vehicle and engage the parking brake.
  - Shut off the tow vehicle engine and remove the key.
- Keep all fasteners tightened securely. Replace any parts removed when servicing or making adjustments.

European Privacy Notice

The Information Toro Collects
Toro Warranty Company (Toro) respects your privacy. In order to process your warranty claim and contact you in the event of a product recall, we ask you to share certain personal information with us, either directly or through your local Toro company or dealer.

The Toro warranty system is hosted on servers located within the United States where privacy law may not provide the same protection as applies in your country.

BY SHARING YOUR PERSONAL INFORMATION WITH US, YOU ARE CONSENTING TO THE PROCESSING OF YOUR PERSONAL INFORMATION AS DESCRIBED IN THIS PRIVACY NOTICE.

The Way Toro Uses Information
Toro may use your personal information to process warranty claims, to contact you in the event of a product recall and for any other purpose which we tell you about. Toro may share your information with Toro's affiliates, dealers or other business partners in connection with any of these activities. We will not sell your personal information to any other company. We reserve the right to disclose personal information in order to comply with applicable laws and with requests by the appropriate authorities, to operate our systems properly or for our own protection or that of other users.

Retention of your Personal Information
We will keep your personal information as long as we need it for the purposes for which it was originally collected or for other legitimate purposes (such as regulatory compliance), or as required by applicable law.

Toro's Commitment to Security of Your Personal Information
We take reasonable precautions in order to protect the security of your personal information. We also take steps to maintain the accuracy and current status of personal information.

Access and Correction of your Personal Information
If you would like to review or correct your personal information, please contact us by email at legal@toro.com.

Australian Consumer Law

Australian customers will find details relating to the Australian Consumer Law either inside the box or at your local Toro Dealer.

California Proposition 65 Warning Information

What is this warning?

You may see a product for sale that has a warning label like the following:



WARNING: Cancer and Reproductive Harm—www.p65Warnings.ca.gov.

What is Prop 65?

Prop 65 applies to any company operating in California, selling products in California, or manufacturing products that may be sold in or brought into California. It mandates that the Governor of California maintain and publish a list of chemicals known to cause cancer, birth defects, and/or other reproductive harm. The list, which is updated annually, includes hundreds of chemicals found in many everyday items. The purpose of Prop 65 is to inform the public about exposure to these chemicals.

Prop 65 does not ban the sale of products containing these chemicals but instead requires warnings on any product, product packaging, or literature with the product. Moreover, a Prop 65 warning does not mean that a product is in violation of any product safety standards or requirements. In fact, the California government has clarified that a Prop 65 warning "is not the same as a regulatory decision that a product is 'safe' or 'unsafe.'" Many of these chemicals have been used in everyday products for years without documented harm. For more information, go to https://oag.ca.gov/prop65/faqs-view-all.

A Prop 65 warning means that a company has either (1) evaluated the exposure and has concluded that it exceeds the "no significant risk level"; or (2) has chosen to provide a warning based on its understanding about the presence of a listed chemical without attempting to evaluate the exposure.

Does this law apply everywhere?

Prop 65 warnings are required under California law only. These warnings are seen throughout California in a wide range of settings, including but not limited to restaurants, grocery stores, hotels, schools, and hospitals, and on a wide variety of products. Additionally, some online and mail order retailers provide Prop 65 warnings on their websites or in catalogs.

How do the California warnings compare to federal limits?

Prop 65 standards are often more stringent than federal and international standards. There are various substances that require a Prop 65 warning at levels that are far lower than federal action limits. For example, the Prop 65 standard for warnings for lead is 0.5 µg/day, which is well below the federal and international standards.

Why don't all similar products carry the warning?

- Products sold in California require Prop 65 labelling while similar products sold elsewhere do not.
- A company involved in a Prop 65 lawsuit reaching a settlement may be required to use Prop 65 warnings for its products, but other companies making similar products may have no such requirement.
- The enforcement of Prop 65 is inconsistent.
- Companies may elect not to provide warnings because they conclude that they are not required to do so under Prop 65; a lack of warnings for a product does not mean that the product is free of listed chemicals at similar levels.

Why does Toro include this warning?

Toro has chosen to provide consumers with as much information as possible so that they can make informed decisions about the products they buy and use. Toro provides warnings in certain cases based on its knowledge of the presence of one or more listed chemicals without evaluating the level of exposure, as not all the listed chemicals provide exposure limit requirements. While the exposure from Toro products may be negligible or well within the "no significant risk" range, out of an abundance of caution, Toro has elected to provide the Prop 65 warnings. Moreover, if Toro does not provide these warnings, it could be sued by the State of California or by private parties seeking to enforce Prop 65 and subject to substantial penalties.

The Toro Warranty

A Two-Year Limited Warranty

Conditions and Products Covered

The Toro Company and its affiliate, Toro Warranty Company, pursuant to an agreement between them, jointly warrant your Toro Commercial product ("Product") to be free from defects in materials or workmanship for two years or 1500 operational hours*, whichever occurs first. This warranty is applicable to all products with the exception of Aerators (refer to separate warranty statements for these products). Where a warrantable condition exists, we will repair the Product at no cost to you including diagnostics, labor, parts, and transportation. This warranty begins on the date the Product is delivered to the original retail purchaser.
* Product equipped with an hour meter.

Instructions for Obtaining Warranty Service

You are responsible for notifying the Commercial Products Distributor or Authorized Commercial Products Dealer from whom you purchased the Product as soon as you believe a warrantable condition exists. If you need help locating a Commercial Products Distributor or Authorized Dealer, or if you have questions regarding your warranty rights or responsibilities, you may contact us at:

Toro Commercial Products Service Department
Toro Warranty Company
8111 Lyndale Avenue South
Bloomington, MN 55420-1196

952–888–8801 or 800–952–2740
E-mail: commercial.warranty@toro.com

Owner Responsibilities

As the Product owner, you are responsible for required maintenance and adjustments stated in your *Operator's Manual*. Failure to perform required maintenance and adjustments can be grounds for disallowing a warranty claim.

Items and Conditions Not Covered

Not all product failures or malfunctions that occur during the warranty period are defects in materials or workmanship. This warranty does not cover the following:

- Product failures which result from the use of non-Toro replacement parts, or from installation and use of add-on, or modified non-Toro branded accessories and products. A separate warranty may be provided by the manufacturer of these items.
- Product failures which result from failure to perform recommended maintenance and/or adjustments. Failure to properly maintain your Toro product per the Recommended Maintenance listed in the *Operator's Manual* can result in claims for warranty being denied.
- Product failures which result from operating the Product in an abusive, negligent, or reckless manner.
- Parts subject to consumption through use unless found to be defective. Examples of parts which are consumed, or used up, during normal Product operation include, but are not limited to, brake pads and linings, clutch linings, blades, reels, rollers and bearings (sealed or greasable), bed knives, spark plugs, castor wheels and bearings, tires, filters, belts, and certain sprayer components such as diaphragms, nozzles, and check valves, etc.
- Failures caused by outside influence. Conditions considered to be outside influence include, but are not limited to, weather, storage practices, contamination, use of unapproved fuels, coolants, lubricants, additives, fertilizers, water, or chemicals, etc.
- Failure or performance issues due to the use of fuels (e.g. gasoline, diesel, or biodiesel) that do not conform to their respective industry standards.
- Normal noise, vibration, wear and tear, and deterioration.
- Normal "wear and tear" includes, but is not limited to, damage to seats due to wear or abrasion, worn painted surfaces, scratched decals or windows, etc.

Parts

Parts scheduled for replacement as required maintenance are warranted for the period of time up to the scheduled replacement time for that part. Parts replaced under this warranty are covered for the duration of the original product warranty and become the property of Toro. Toro will make the final decision whether to repair any existing part or assembly or replace it. Toro may use remanufactured parts for warranty repairs.

Deep Cycle and Lithium-Ion Battery Warranty:

Deep cycle and Lithium-Ion batteries have a specified total number of kilowatt-hours they can deliver during their lifetime. Operating, recharging, and maintenance techniques can extend or reduce total battery life. As the batteries in this product are consumed, the amount of useful work between charging intervals will slowly decrease until the battery is completely worn out. Replacement of worn out batteries, due to normal consumption, is the responsibility of the product owner. Battery replacement may be required during the normal product warranty period at owner's expense. Note: (Lithium-Ion battery only): A Lithium-Ion battery has a part only prorated warranty beginning year 3 through year 5 based on the time in service and kilowatt hours used. Refer to the *Operator's Manual* for additional information.

Maintenance is at Owner's Expense

Engine tune-up, lubrication, cleaning and polishing, replacement of filters, coolant, and completing recommended maintenance are some of the normal services Toro products require that are at the owner's expense.

General Conditions

Repair by an Authorized Toro Distributor or Dealer is your sole remedy under this warranty.

Neither The Toro Company nor Toro Warranty Company is liable for indirect, incidental or consequential damages in connection with the use of the Toro Products covered by this warranty, including any cost or expense of providing substitute equipment or service during reasonable periods of malfunction or non-use pending completion of repairs under this warranty. Except for the Emissions warranty referenced below, if applicable, there is no other express warranty. All implied warranties of merchantability and fitness for use are limited to the duration of this express warranty.

Some states do not allow exclusions of incidental or consequential damages, or limitations on how long an implied warranty lasts, so the above exclusions and limitations may not apply to you. This warranty gives you specific legal rights, and you may also have other rights which vary from state to state.

Note regarding engine warranty:

The Emissions Control System on your Product may be covered by a separate warranty meeting requirements established by the U.S. Environmental Protection Agency (EPA) and/or the California Air Resources Board (CARB). The hour limitations set forth above do not apply to the Emissions Control System Warranty. Refer to the Engine Emission Control Warranty Statement supplied with your product or contained in the engine manufacturer's documentation for details

Countries Other than the United States or Canada

Customers who have purchased Toro products exported from the United States or Canada should contact their Toro Distributor (Dealer) to obtain guarantee policies for your country, province, or state. If for any reason you are dissatisfied with your Distributor's service or have difficulty obtaining guarantee information, contact the Toro importer.

374-0253 Rev D