Form No. 3391-230 Rev B

TORO®

Count on it.

Parts Catalog

CT2240 Compact Triple 4-Wheel Drive Turf Mower

Model No. 30654—Serial No. 315000001 and Up

Register at www.Toro.com.
Original Instructions (EN)

CE

3391-230 B

Ordering Replacement Parts

To order replacement parts, please supply the part number, the quantity, and the description of each part desired.

Understanding Reference Numbers

Each identified part in an illustration has a reference number. The reference number for a part also appears in the parts list, along with other information about the part.

This catalog uses two special reference number formats, one to indicate parts in a service assembly and another to indicate the quantity of a given part in an illustration.

Service Assembly Reference Numbers

Parts in service assemblies have reference numbers in the form a:b. The a represents the reference number of the entire service assembly and the b represents a sequential number unique to each part within the service assembly.

For example, a wheel assembly might be identified by reference number 6, the tire by 6:1, the valve by 6:2, and the wheel by 6:3. When you order the assembly identified by reference number 6, you receive all parts identified by reference numbers 6:1,6:2, and 6:3. However, you may also order any part individually. Reference numbers of this type appear in illustration and in parts lists.

Reference Numbers Indicating Quantity

In an illustration, if a reference number indicates more than one part, the reference number has the form nX y. The n represents the quantity of the part, the X is the multiplication symbol, and the y represents the reference number.

For example, in an illustration, the reference number 2X 37 means that two of the parts identified by reference number 37 are indicated.

Contents

Main Frame, Chassis, Front Wheel and Battery Assembly . . . 4
Engine and Mounting Assembly . . . 6
Radiator and Shroud Assembly . . . 8
Rear Axle Assembly . . . 10
Steering Column, Seat and Platform Assembly . . . 12
Pedal Control Assembly . . . 14
Fuel Tank and Storage Pod Assembly . . . 16
Front Lift Arm Assembly . . . 18
Center Arm Assembly . . . 20
Roll-Over Protection System Assembly . . . 22
Hydraulic Oil Tank Assembly . . . 24
Lift Manifold Assembly . . . 26
Hydraulic Transimission Manifold Assembly . . . 28
Transmission and Tandem Pump Assembly . . . 30
Cutter Component Assembly . . . 32
Cutter Control Manifold Assembly . . . 34
Control Panel Assembly . . . 36
Filter Assembly . . . 38
Loom Kit . . . 40
Electrical Assembly . . . 42
Rear Transmission Block Assembly . . . 44
Hood Assembly . . . 46
Transmission Hydraulic Circuit Assembly . . . 48
Lift/Steer Hydraulic Circuit Assembly . . . 50
Cutters Hydraulic Circuit Assembly . . . 52
Crankcase Assembly . . . 54
Oil Pan, Pump and Dipstick Assembly . . . 55
Cylinder Head Assembly . . . 56
Gear Case and Oil Filter Cartridge Assembly . . . 57
Cylinder Head Cover Assembly . . . 58
Main Bearing Case Assembly . . . 59
Camshaft and Idle Gear Shaft Assembly . . . 60
Piston and Crankshaft Assembly . . . 61
Flywheel Assembly . . . 62
Fuel Camshaft and Governor Shaft Assembly . . . 63
Idle Apparatus and Stop Solenoid Assembly . . . 64
Injection Pump and Fuel Pump Assembly . . . 65
Governor Assembly . . . 66
Speed Control Plate Assembly . . . 67
Nozzle Holder and Glow Plug Assembly . . . 68
Nozzle Holder Assembly . . . 69
Alternator and Pulley Assembly . . . 70
Alternator Components Assembly . . . 71
Starter Assembly . . . 72
Starter Component Assembly . . . 73
Water Flange and Thermostat Assembly . . . 74
Water Pump and Water Pipe Assembly . . . 75
Valve and Rocker Arm Assembly . . . 76
Inlet and Exhaust Manifold Assembly . . . 77
Miscellaneous Engine Parts . . . 78
Muffler Assembly . . . 79
Fuel Filter Assembly . . . 80
Attachments and Accessories . . . 81

© 2018—The Toro® Company
8111 Lyndale Avenue South
Bloomington, MN 55420

Contact us at www.Toro.com.
Printed in the USA.
All Rights Reserved

Main Frame, Chassis, Front Wheel and Battery Assembly

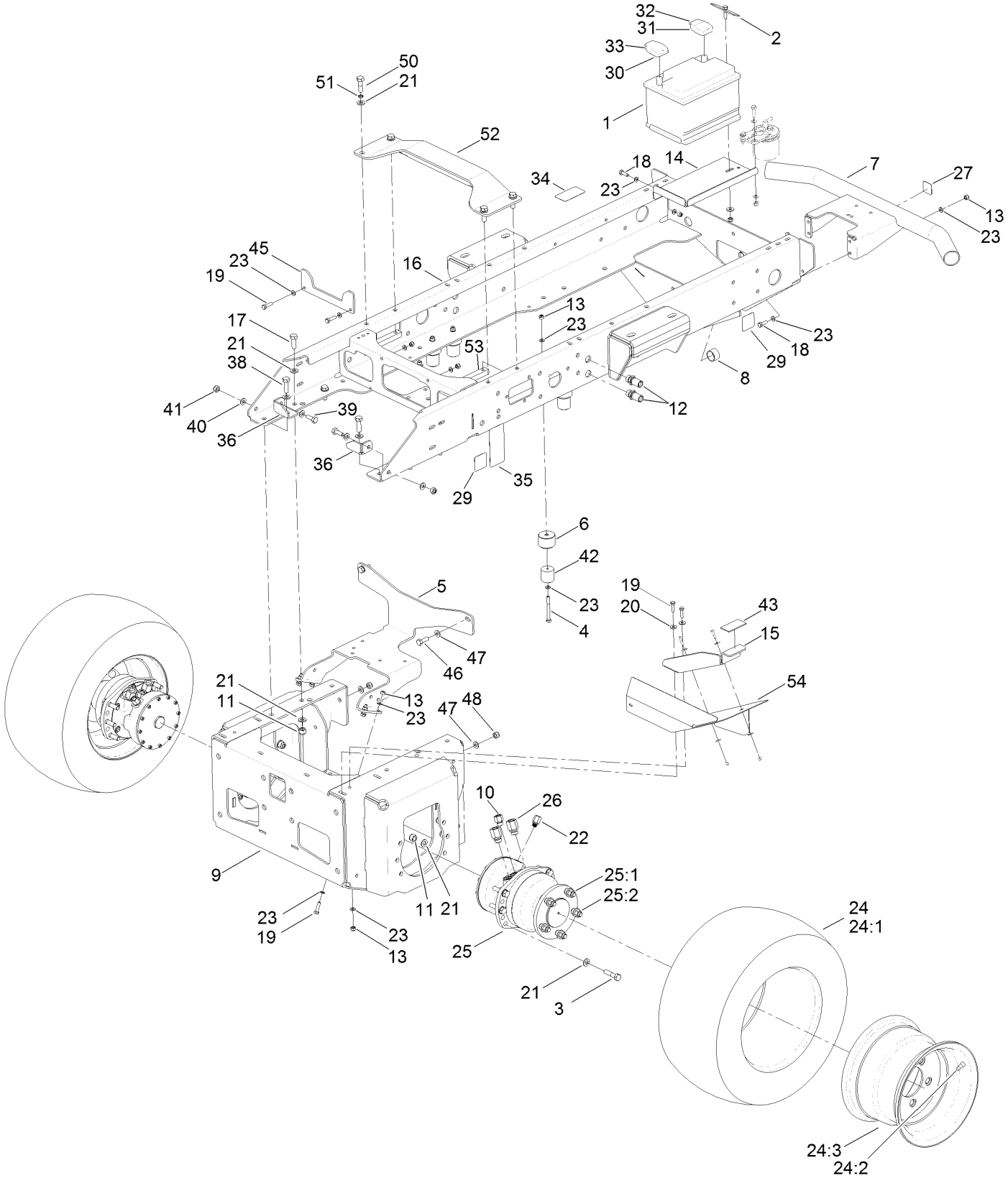

Main Frame, Chassis, Front Wheel and Battery Assembly (continued)

Ref.	Part Number	Qty.	Description
1	70-09-015	1	Battery
2	70-01-340	1	Retainer-Battery
3	09552	12	Screw-HH
4	ZBH1H080U	4	Bolt
5	111-6791-03	1	Bracket-Manifold, Cutter
6	111-5305	4	Bump-Stop
7	111-3110-03	1	Bumper-Rear
8	65-07-051	2	Bushing
9	111-7284-03	1	Chassis-Front
10	111-3509	2	Adaptor
11	ZNN1L000U	18	Nut-Nyloc
12	09-06-216	2	Adaptor-Bulkhead
13	09441	21	Nut-Hex, NI
14	111-2599-03	1	Plate-Mount, Battery
15	111-3217-03	1	Support-Platform, Front (LH)
16	111-2100-03	1	Chassis-Rear
17	ZDH1L035U	4	Screw-HH
18	03162	6	Screw-HH
19	09369	10	Screw-HH
20	09267	3	Washer
21	HY09485	40	Washer-Plain
22	111-3538	2	Adaptor
23	ZWP1H000U	36	Washer-Plain
24	111-6881	2	Wheel ASM
24:1	65-07-109	1	Tire
24:2	65-07-110	1	Tube-Inner ●
24:3	111-6882	1	Wheel Rim

Ref.	Part Number	Qty.	Description
25	111-6761	2	HYD Motor ASM
25:1	111-7059	5	Stud-Wheel
25:2	74-07-016	5	Nut
26	111-3529	4	Adaptor
27	70-13-072	1	Decal
29	950832	4	Decal
30	70-09-171	1	Terminal-Positive
31	70-09-172	1	Terminal-Negative
32	111-3690	1	Cable-Battery, Positive
33	70-09-170	1	Cable-Battery, Negative
34	950889	1	Decal-Warning
35	111-3901	1	Decal-Transmission, Oil
36	111-7092-03	2	Bracket-Chassis, Universal
38	ZDH1L040U	2	Screw-HH
39	09392	2	Screw-HH
40	ZWQ1J000U	4	Washer-Plain
41	ZNN1J000U	2	Nut-Hex, NI
42	61-07-003	4	Buffer-Rubber
43	HY910808	1	Strip-Neoprene
45	111-5538-03	1	Location-Plate
46	09392	2	Screw-HH
47	09479	4	Washer-Plain
48	ZNN1J000U	2	Nut-Hex, NI
50	63-11-010	4	Bolt-HH
51	09599	4	Washer-Lock
52	111-7065-03	1	Brace
53	111-7094	2	Brace-Chassis
54	111-7335-03	1	Plate, Grass-Deflector

● Not illustrated

Engine and Mounting Assembly

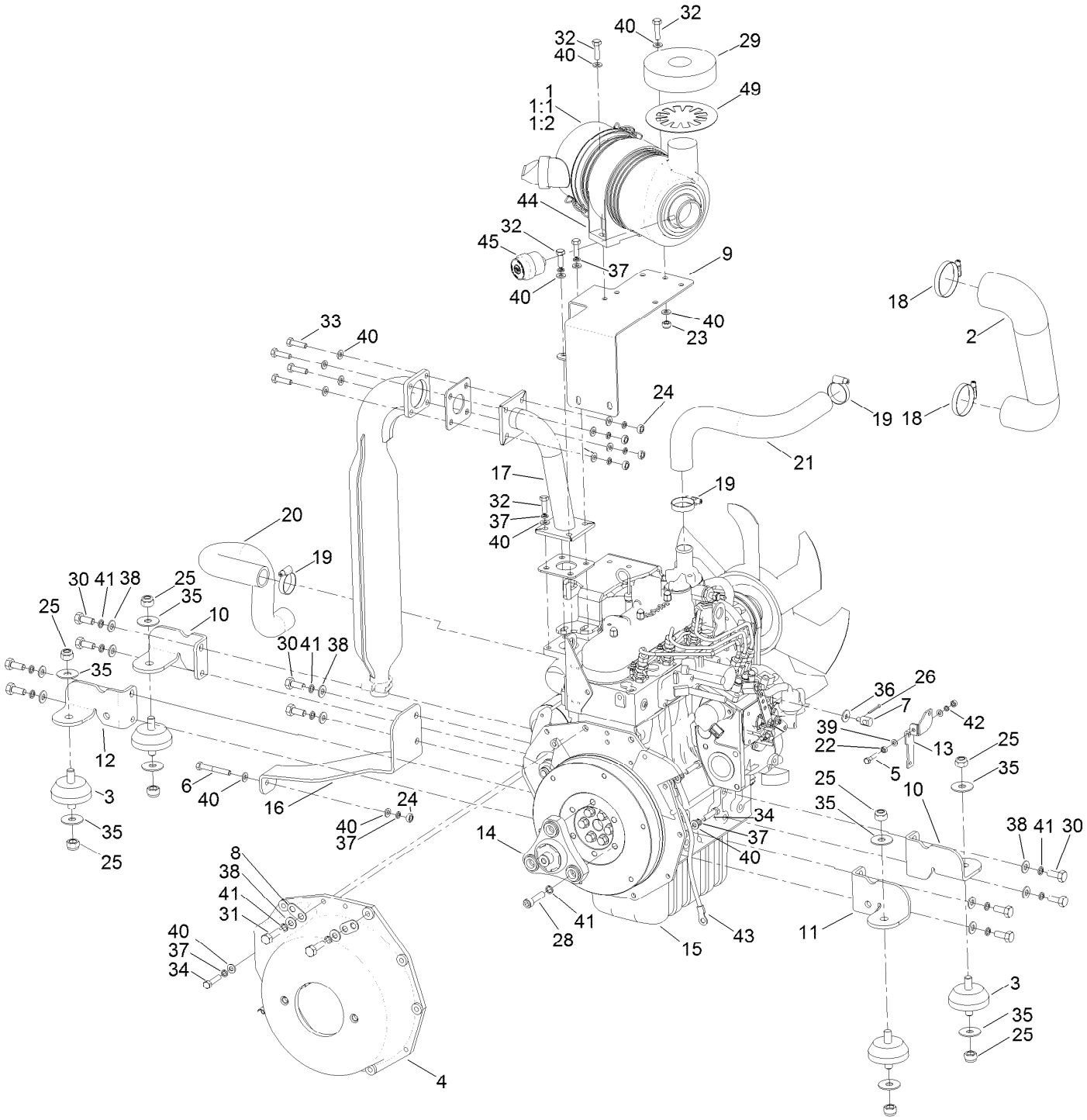

Engine and Mounting Assembly (continued)

Ref.	Part Number	Qty.	Description
1	111-3805	1	Air Filter ASM
1:1	111-3808	1	Filter-Element, Main
1:2	111-3809	1	Filter-Element, Safety
2	111-3554	1	Intake-Hose, Air
3	910816	4	Isomount-Engine
4	922851	1	Housing-Bell
5	09547	1	Screw-HH
6	09371	1	Bolt
7	111-3298	1	Pivot-Throttle, Boss
8	74-01-327	2	Bracket-Loom, Tie
9	111-3036-03	1	Bracket-Air Cleaner
10	111-3043-03	2	Bracket-Mount, Engine
11	111-3238-03	1	Bracket-Engine Mount, Front (LH)
12	111-3239-03	1	Bracket-Engine Mount, Front (RH)
13	111-3299-03	1	Bracket-Throttle
14	111-2556	1	Coupling
15	111-2376	1	Engine-Kubota, D1105 E2B
16	111-3045-03	1	Stay-Exhaust
17	111-3038	1	Flange-Exhaust
18	65-07-042	2	Clip-Hose
19	924438	4	Clamp-Hose
20	111-2567	1	Hose-Radiator, Bottom
21	910921	1	Hose-Top
22	09437	2	Nut
23	09441	2	Nut-Hex, NI
24	ZNH1H000U	5	Nut-Hex
25	09231	8	Nut-Hex
26	70-11-005	1	Pin-Split
27	940213	1	Tail Pipe-Exhaust ●
28	111-3806	3	Screw-HSH
29	111-3555	1	Seal-Air Intake
30	50-11-005	10	Screw-HH
31	111-0597	2	Screw-HH
32	03162	10	Screw-HH
33	09369	4	Screw-HH
34	ZDH1H035U	8	Screw-HH
35	09283	8	Washer
36	09267	1	Washer
37	03469	19	Washer-Spring
38	ZWQ1J000U	12	Washer-Plain
39	ZWP1F000U	2	Washer-Plain
40	ZWP1H000U	24	Washer-Plain
41	09480	15	Washer-Lock
42	09474	1	Washer-Spring
43	70-09-023	1	Cable-Earth
44	111-3807	1	Bracket-Mounting, Air Filter
45	953870	1	Indicator-Filter Blockage
49	111-6937-03	1	Washer-Pad, Intake Air

● Not illustrated

Radiator and Shroud Assembly

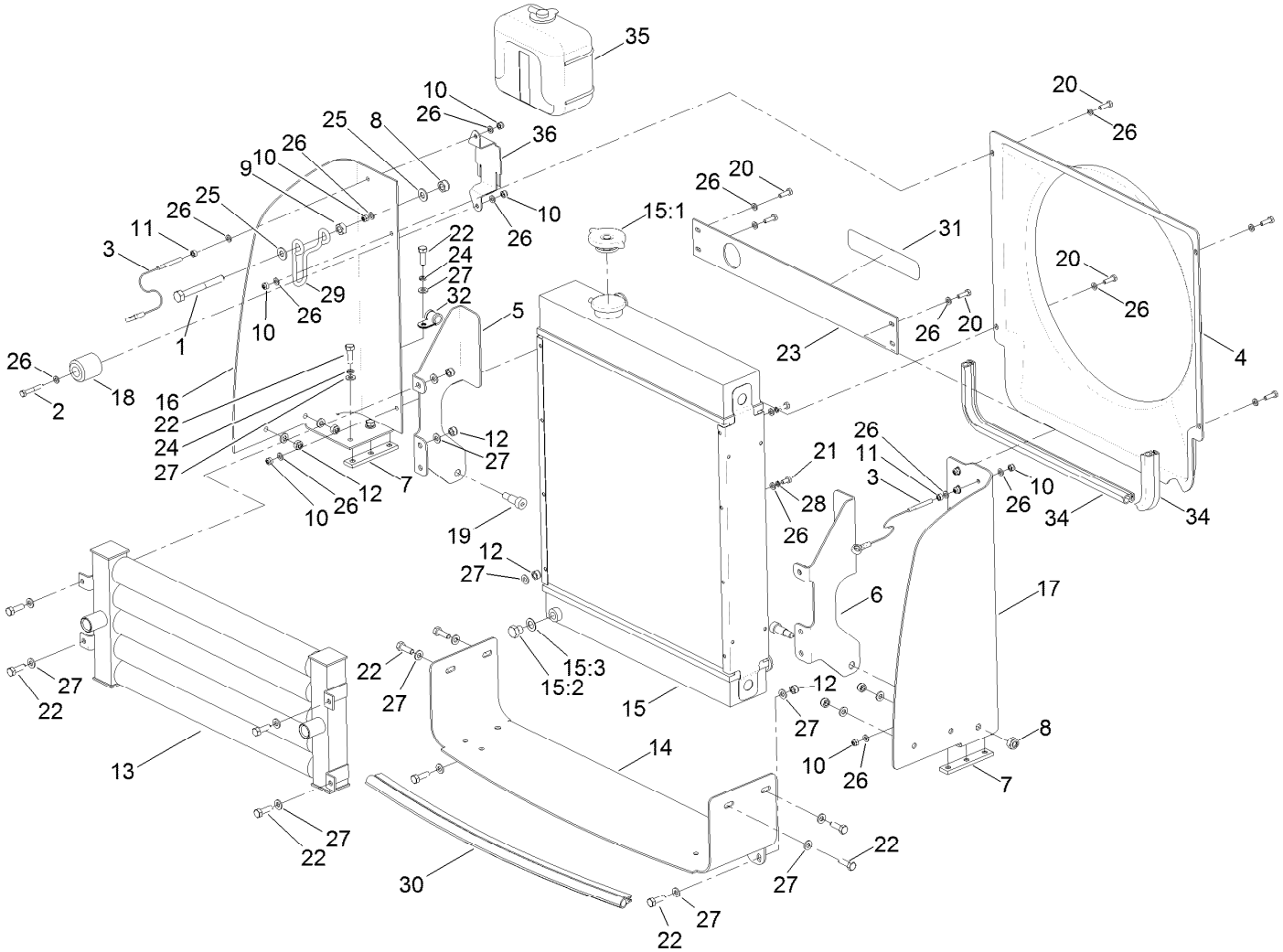

Radiator and Shroud Assembly (continued)

Ref.	Part Number	Qty.	Description
1	ZBH1J090U	1	Screw-HH
2	ZBH1F040U	2	Screw-HH
3	924825	2	Cable-Stay, Cover
4	111-3301	1	Cowl-Fan
5	111-3010-03	1	Hinge-Oil Cooler, LH
6	111-3011-03	1	Hinge-Oil Cooler, RH
7	111-3281	2	Bar-Nut
8	ZNN1J000U	3	Nut-Hex, NI
9	09449	1	Nut
10	09438	12	Nut-Nyloc
11	09437	2	Nut
12	09441	10	Nut-Hex, NI
13	70-06-171	1	Cooler-Oil
14	111-3009-03	1	Plate-Seal, Lower
15	111-5193	1	Radiator ASM
15:1	111-0698	1	Cap-Radiator
15:2	30-06-200	1	Plug-HYD
15:3	200134	1	Washer
16	111-3006-03	1	Bracket-Radiator, LH
17	111-3007-03	1	Bracket-Radiator, RH
18	61-07-003	2	Buffer-Rubber
19	ZIS1J020S	2	Bolt-Shoulder, Socket Head
20	09363	8	Screw-HH
21	09361	6	Screw-HH
22	03162	16	Screw-HH
23	111-3008-03	1	Seal-Top
24	03469	6	Washer-Spring
25	ZWQ1J000U	2	Washer-Plain
26	09472	30	Washer-Plain
27	ZWP1H000U	24	Washer-Plain
28	09474	6	Washer-Spring
29	104-5429	1	Clamp-Form, Wire
30	994808	3	Excluder-Draught
31	111-3902	1	Decal-Engine, Fan/Radiator
32	111-6082	1	Clamp-Cable
34	111-7053	1	Seal-Bubble, Side
35	111-7452	1	Tank-Reserve, Coolant
36	108-9930-03	1	Bracket-Bottle

Rear Axle Assembly

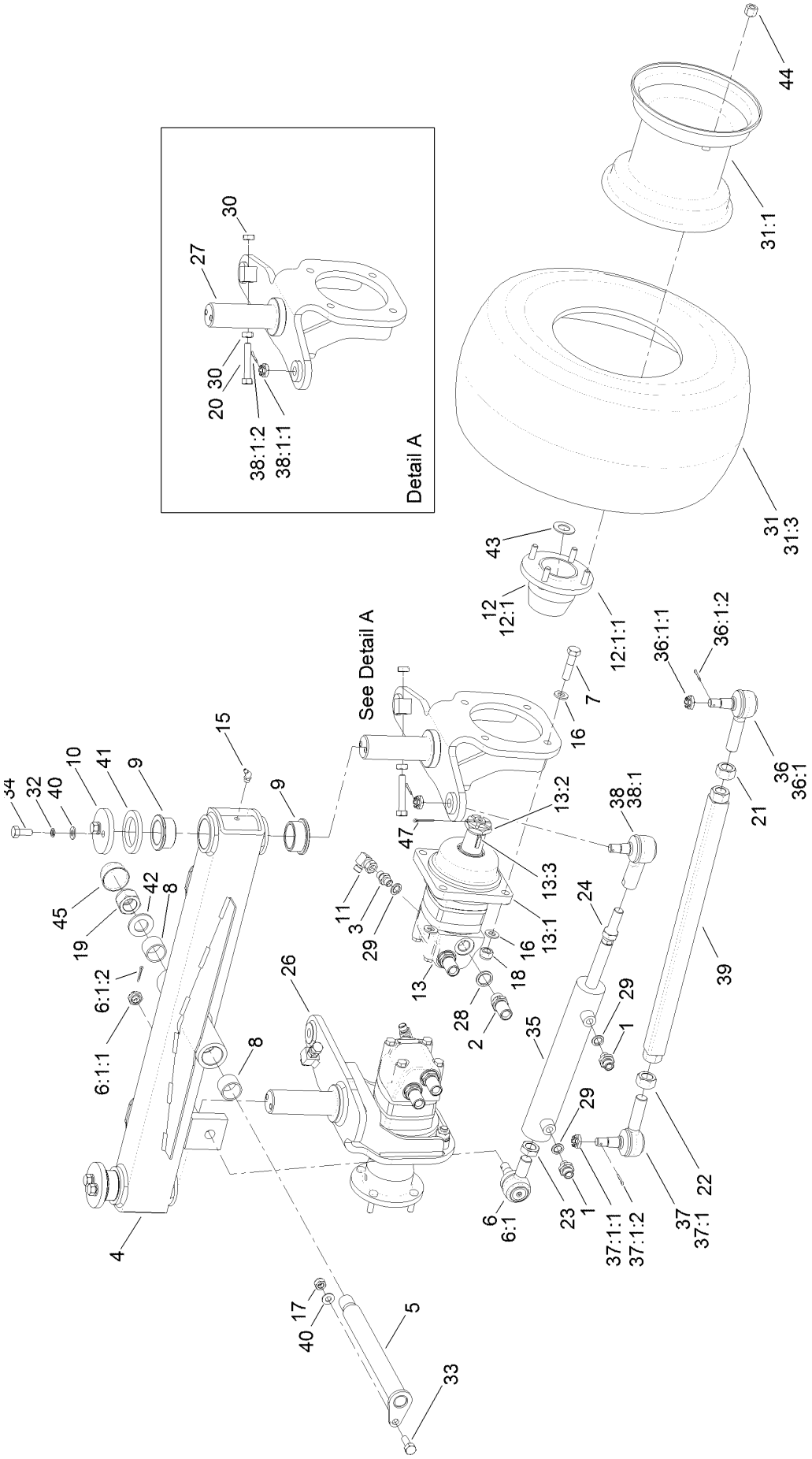

Rear Axle Assembly (continued)

Ref.	Part Number	Qty.	Description
1	50-06-009	2	Adaptor-BSP
2	09-06-216	4	Adaptor-Bulkhead
3	10-06-085	2	Adaptor
4	111-4995-03	1	Axle-Rear
5	111-3265	1	Pin-Axle
6	111-6578-03	1	Joint-Ball
6:1		1	Ball Joint ■
6:1:1	111-5116	1	Nut-Castle
6:1:2	09306	1	Pin-Split
7	09552	8	Screw-HH
8	70-05-031	2	Bushing
9	111-3681	4	Bushing-Flanged, Oilite
10	70-01-197	2	Cap-Washer
11	31-06-004	2	Elbow-Compact
12	111-5176-03	2	Wheel Hub ASM
12:1		1	Hub-Wheel ■
12:1:1	65-07-019	4	Stud-Wheel ●
13	111-2260	2	HYD Motor ASM
13:1	111-3421	1	Seal Kit ●
13:2	70-06-081	1	Castle-Nut
13:3	70-06-089	1	Key
15	63-07-027	3	Zerk-Grease, BSP (90 DEG)
16	HY09485	16	Washer-Plain
17	ZNN1J000U	1	Nut-Hex, NI
18	09650	8	Nut-Hex, Nyloc
19	ZNN1X000U	1	Nut-Hex, Nyloc
20	ZDH1J060U	2	Setscrew-HH
21	70-11-002	1	Nut
22	70-11-001	1	Nut
23	09828	1	Nut
24	09827	1	Nut
26	111-4982-03	1	RH Rear Yoke ASM
27	111-4983-03	1	LH Rear Yoke ASM
28	10-06-032	4	Seal-Dowty
29	10-06-030	4	Seal-Dowty
30	09449	4	Nut
31	111-6880	2	Wheel ASM
31:1	111-6877	1	Rim-Wheel
31:2	72-07-068	1	Tube-Inner ●
31:3	922804	1	Tyre, 18X9.50-8 (6 Ply)
32	09480	4	Washer-Lock
33	09392	1	Screw-HH
34	09395	4	Screw-HH
35	924724	1	HYD Steering Cylinder ASM
35:1	111-4872	1	Seal Kit ●
36	111-6065-03	1	Rod End-Track, RH
36:1		1	Rod End-RH ■
36:1:1	111-5116	1	Nut-Castle
36:1:2	09306	1	Pin-Split
37	111-6066-03	1	Rod End-Track, LH
37:1		1	Rod End-LH ■
37:1:1	111-5116	1	Nut-Castle
37:1:2	09306	1	Pin-Split
38	111-5087-03	1	Joint-Ball
38:1		1	Joint-Ball ■
38:1:1	111-5116	1	Nut-Castle
38:1:2	09306	1	Pin-Split
39	111-2560-03	1	Rod-Track
40	ZWQ1J000U	5	Washer-Plain
41	70-07-149	2	Washer-Felt
42	09555	1	Washer
43	ZWP1T000U	2	Washer-Plain
44	65-07-009	8	Nut-Wheel, Dome
45	10-11-100	1	Cap-Nut
47	70-11-004	2	Pin-Split

● Not illustrated

■ Not serviced separately

Steering Column, Seat and Platform Assembly

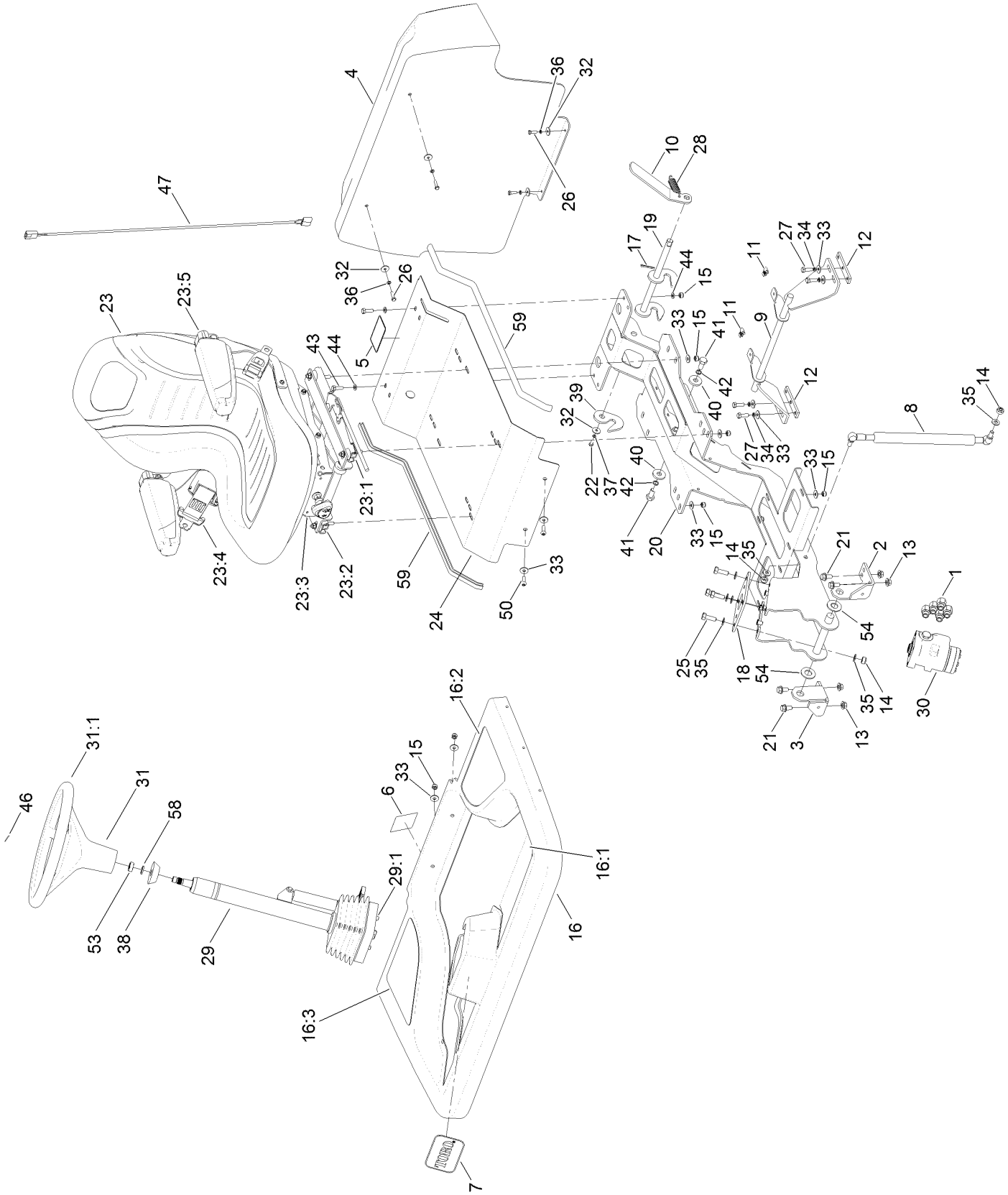

Steering Column, Seat and Platform Assembly (continued)

Ref.	Part Number	Qty.	Description
1	111-3509	5	Adaptor
2	111-3243-03	1	Bracket-Platform Pivot, LH
3	111-2665-03	1	Bracket-Platform Pivot, RH
4	111-3293	1	Bulkhead
5	111-3566	1	Decal-Latch, Platform
6	111-3562	1	Decal
7	67-1300	1	Decal
8	111-3510	1	Spring-Gas
9	111-3140-03	1	Bar-Latch
10	111-3269-03	1	Lever-Latch, Platform
11	410076	2	Nut
12	111-3281	2	Bar-Nut
13	63-11-015	4	Nut-Flanged
14	ZNN1J000U	6	Nut-Hex, NI
15	09441	16	Nut-Hex, NI
16	111-3296	1	Operator Platform ASM
16:1	111-3506	1	Mat-Floor
16:2	111-3507	1	Mat-Side, LH
16:3	111-3508	1	Mat-Side, RH
17	70-11-004	1	Pin-Split
18	111-2899-03	1	Plate-Mount, Pump (Steering)
19	111-3266	1	Latch-Platform
20	111-2640-03	1	Support-Platform
21	63-11-018	4	Screw-Durloc
22	09362	1	Screw-HH
23	111-3500	1	Seat ASM (W/Seat Belt)
23:1	111-3498	1	Adjuster-Rail, Seat
23:2	111-3499	1	Rail-Adjuster, Slave
23:3	111-3501	1	Suspension-Seat
23:4	111-3502	1	Seat Belt ASM
23:5	111-3511	1	Arm Rest Kit
23:6	111-3674	1	Switch-Seat ●
24	111-3069-03	1	Pan-Seat
25	09392	4	Screw-HH
26	09363	2	Screw-HH
27	03162	4	Screw-HH
28	70-07-063	1	Spring-Extension
29	111-6756	1	Steering Column ASM
29:1	110-6462	1	Bellows-Rubber
29:2	110-6463	1	Cylinder Service Kit ●
29:3	110-6464	1	Pedal Service Kit
29:4	110-6465	1	Cover-Pedal ●
29:5	111-7314	1	Universal Joint Kit ●
29:99	111-3505	4	Bolt ●
30	111-7464	1	Valve-Control, Steering
30:99	94-4095	1	Centering Spring Kit ●
30:99	130-8358	1	Seal Kit ●
31	98-1471	1	Wheel-Steering
31:1	98-1468	1	Cover-Wheel, Steering
32	09263	5	Washer
33	09267	20	Washer
34	03469	4	Washer-Spring
35	ZWQ1J000U	10	Washer-Plain
36	09264	4	Washer-Spring
37	09474	1	Washer-Spring
38	93-5429	1	Collar-Foam
39	111-3268	1	Latch-Plate, Platform
40	63-01-115	2	Washer
41	09571	2	Screw-HH
42	09599	2	Washer-Lock
43	03162	2	Screw-HH
44	ZWP1H000U	4	Washer-Plain
46	98-1459	1	Decal
47	111-6186	1	Cable-Seat, Beacon
50	ZHS1H025U	2	Screw-HSBH
53	09827	1	Nut
54	09499	2	Washer
58	HY4200	1	Washer-Spring
59	50-08-001	2	Edging-Rubber
99	994808	1	Excluder-Draught ●

● Not illustrated

Pedal Control Assembly

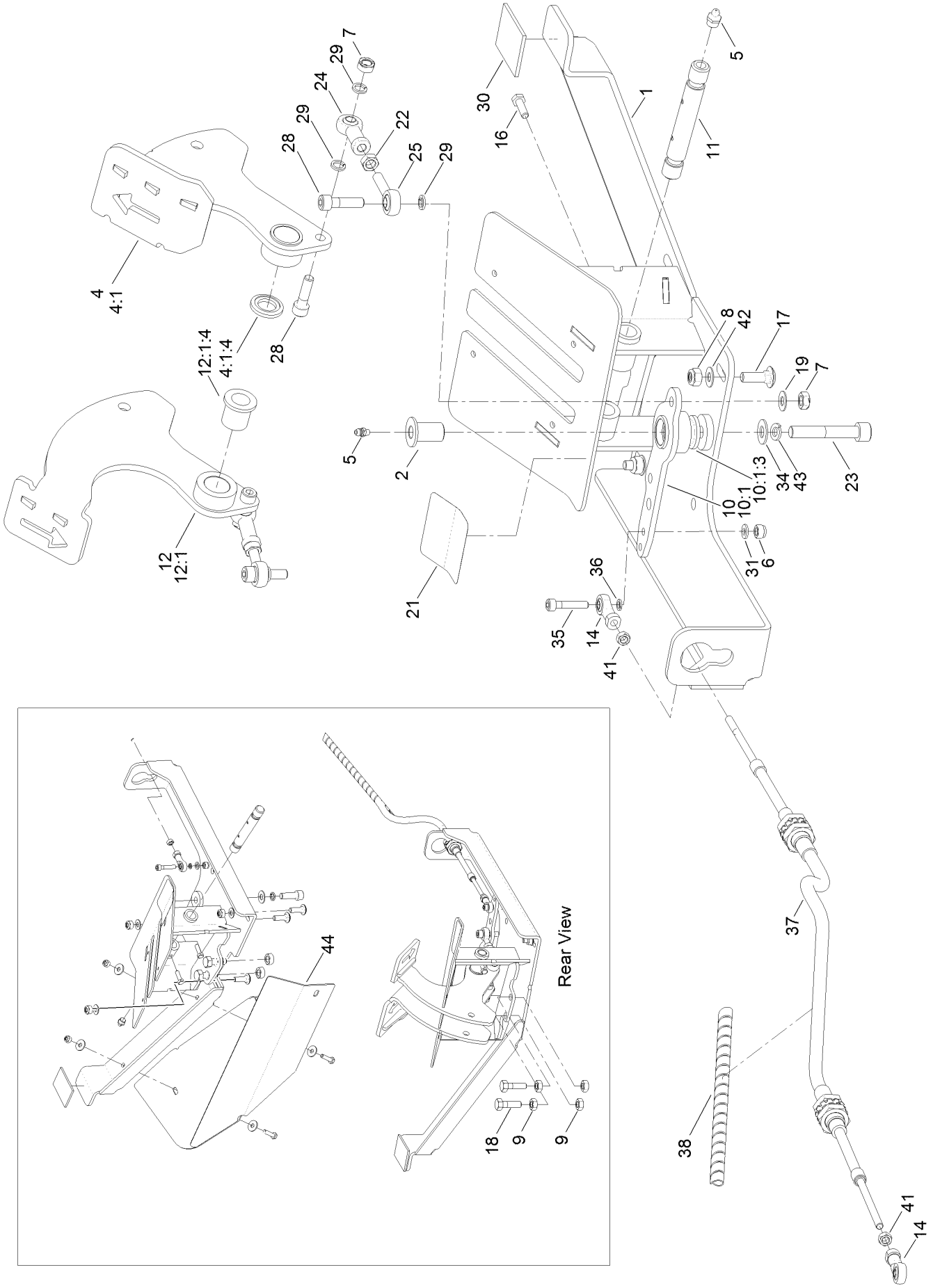

Pedal Control Assembly (continued)

Ref.	Part Number	Qty.	Description
1	111-7175-03	1	Pedal-Mounting
2	111-7122	1	Boss-Pedal, Link
4	111-7170-03	1	Forward Pedal ASM
4:1		1	Pedal-Traction, Forward ●
4:1:4	953868	1	Bushing-Flange, Oilite
5	10-11-017	2	Fitting-Straight
6	09544	1	Nut-Nyloc
7	ZNB1H000U	4	Nut
8	09441	3	Nut-Hex, NI
9	09449	2	Nut
10	111-7068-03	1	Pedal Link ASM
10:1		1	Link-Pedal ●
10:1:3	953868	1	Bushing-Flange, Oilite
11	111-1310	1	Pin-Control, Pedal
12	111-7171-03	1	Reverse Pedal ASM
12:1		1	Pedal-Traction, Reverse ●
12:1:4	953868	1	Bushing-Flange, Oilite
14	111-4579	2	Rod End-Female/Female
16	09363	2	Screw-HH
17	09373	3	Bolt-Coach
18	09392	2	Screw-HH
19	09475	2	Washer
21	111-3567	1	Decal-Pedal, Operation
22	ZNH1H000U	2	Nut-Hex
23	ZCS1J030U	1	Screw-Soc
24	111-2896	2	Rod-End, Female
25	111-6147	2	Rod End
28	ZCS1H030U	4	Screw-Cap
29	111-6948	6	Washer-Spring
30	HY910808	1	Strip-Neoprene
31	09472	1	Washer-Plain
34	09479	1	Washer-Plain
35	111-4586	1	Screw-HSH
36	09474	1	Washer-Spring
37	111-7267	1	Cable-Transmission
38	111-6133	1	Guard-Spiral
41	09437	2	Nut
42	09267	3	Washer
43	09480	1	Washer-Lock
44	111-7336-03	1	Plate-Grass, Deflector (RH)

● Not serviced separately

Fuel Tank and Storage Pod Assembly

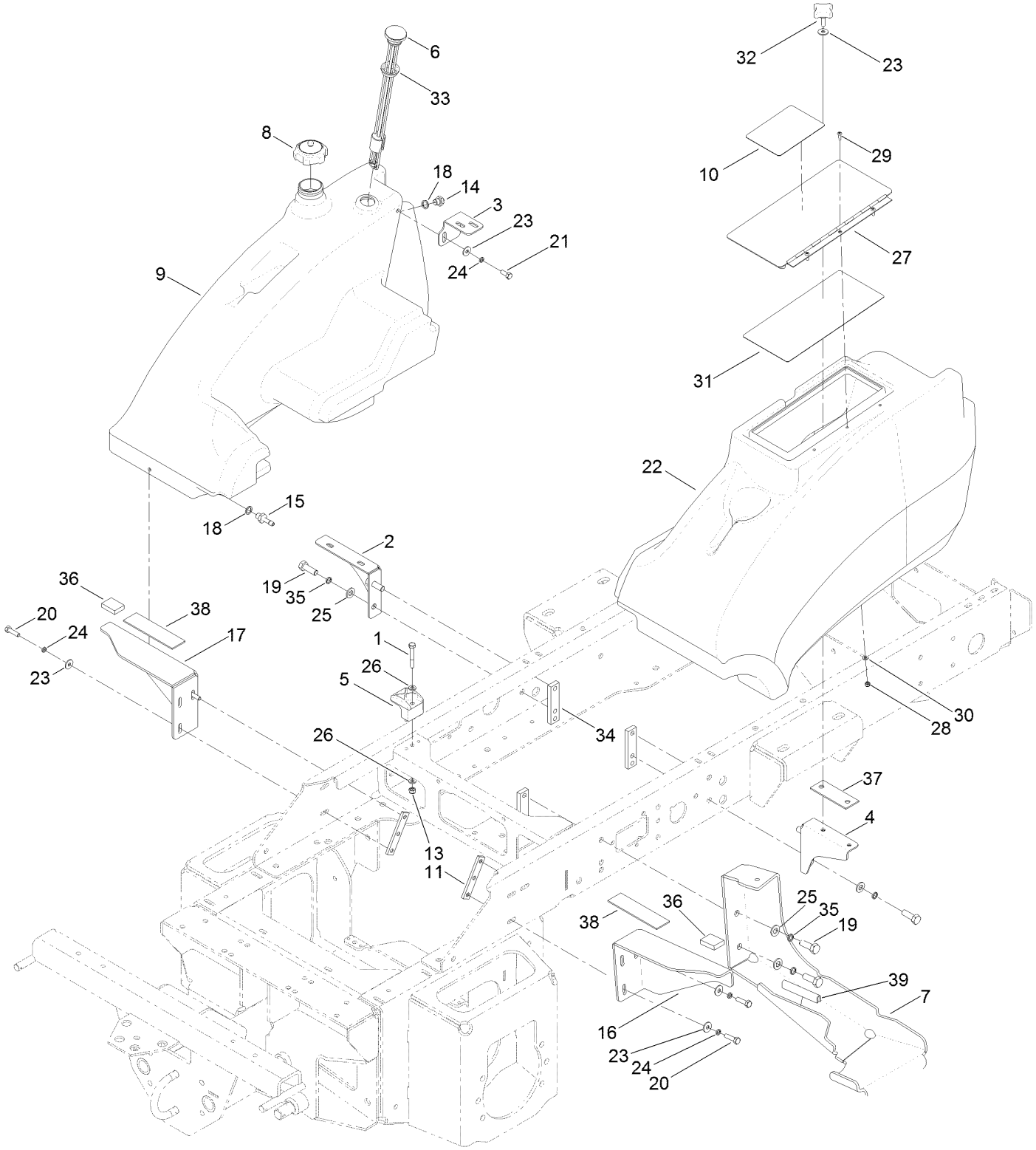

Fuel Tank and Storage Pod Assembly (continued)

Ref.	Part Number	Qty.	Description
1	09565	1	Screw-HH
2	111-3452-03	1	Bracket-Fuel Tank
3	111-3453-03	1	Bracket-Fuel Tank, Upper
4	111-3424-03	1	Bracket-Pod, Storage
5	107-4543	1	Clamp
6	104-5603	1	Gauge-Level, Fuel
7	111-5364-01	1	Bracket-Step
8	111-3531	1	Cap-Fuel
9	111-3294	1	Tank-Fuel
10	111-8098	1	Decal-Warning, Inclines
11	111-3281	2	Bar-Nut
13	09441	1	Nut-Hex, NI
14	910352	1	Pipe-Return, Fuel
15	910351	1	Pipe-Suction, Fuel
16	111-3454-03	1	Support-Platform, LH
17	111-3455-03	1	Support-Platform, RH
18	111-3925	2	Washer-Fiber
19	ZDH1L035U	6	Screw-HH
20	09369	4	Screw-HH
21	09368	2	Screw-HH
22	111-3295	1	Pod-Storage
23	09267	9	Washer
24	03469	6	Washer-Spring
25	HY09485	6	Washer-Plain
26	ZWP1H000U	2	Washer-Plain
27	111-7242-03	1	Cover-Storage
28	09430	3	Nut-Nyloc
29	111-3381	3	Screw-HSBH
30	09470	3	Washer
31	111-7249	1	Decal-Maintenance
32	111-3666	3	Handwheel
33	95-8972	1	Grommet
34	111-4490	3	Bar-Nut
35	09599	6	Washer-Lock
36	111-5386	2	Pad-Rubber
37	111-5388	1	Pad-Rubber, Storage Pod
38	HY910808	1	Strip-Neoprene
39	50-08-001	1	Edging-Rubber
99	70-07-067	1	Tape-Slip, Anti ●

● Not illustrated

Front Lift Arm Assembly

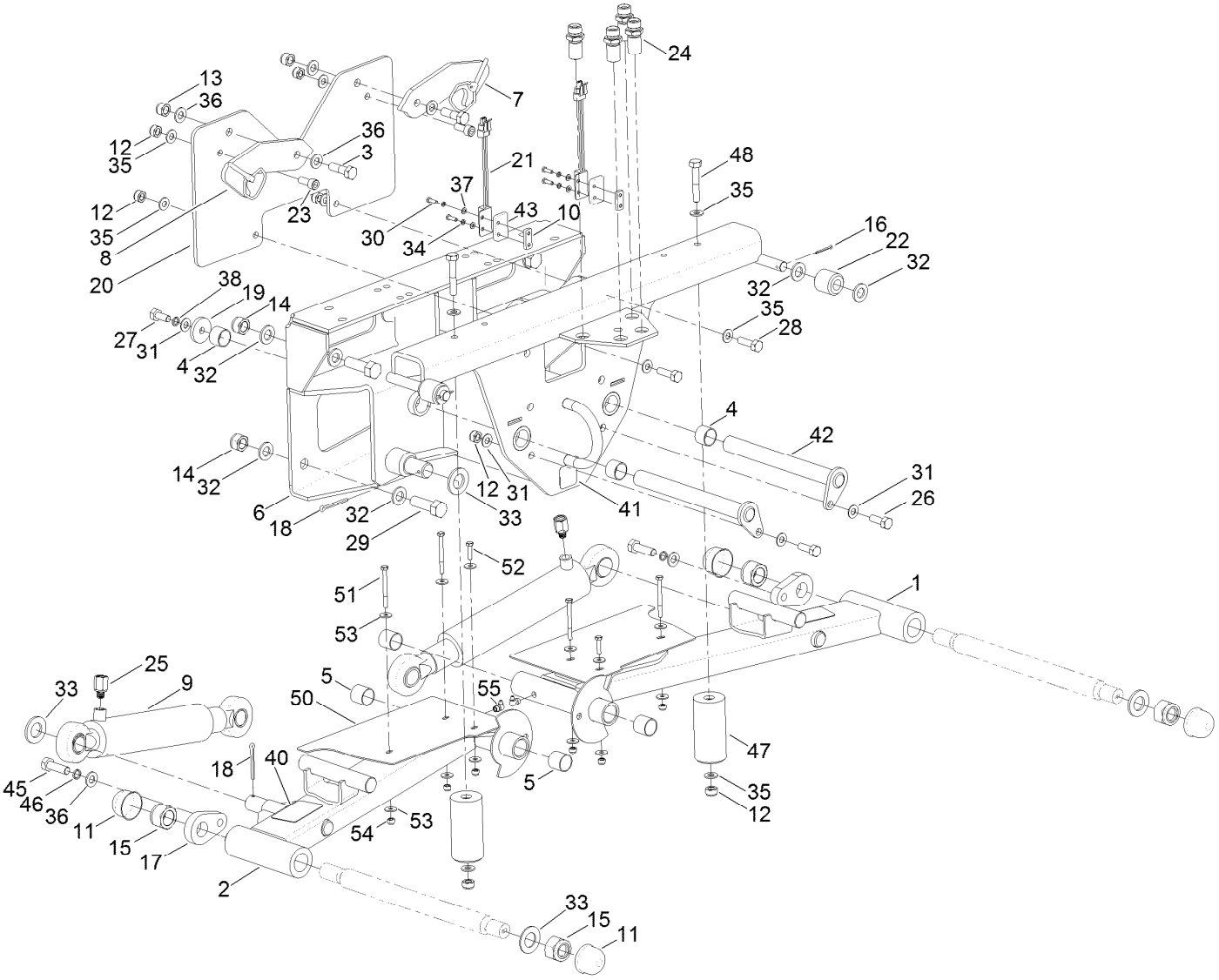

Front Lift Arm Assembly (continued)

Ref.	Part Number	Qty.	Description
1	111-1390-03	1	Arm-Front, RH
2	111-4100-03	1	Arm-Front, LH
3	63-11-010	2	Bolt-HH
4	74-07-028	4	Bushing
5	876066	4	Bushing
6	111-7132-03	1	Front Arm Pivot ASM
7	994350C	1	Latch-LH
8	994355C	1	Latch-RH
9	111-1998	2	HYD Lift Cylinder ASM
9:1	111-3471	1	Seal Kit ●
10	111-3336	2	Bar-Switch, Proximity
11	10-11-100	4	Cap-Nut
12	ZNN1J000U	10	Nut-Hex, NI
13	09650	2	Nut-Hex, Nyloc
14	09456	8	Nut
15	ZNN1X000U	4	Nut-Hex, Nyloc
16	70-11-005	2	Pin-Split
17	63-01-185W	2	Retainer-Pin
18	74-11-003	4	Pin-Split
19	111-3366	2	Plate-Retaining, Bush
20	111-7240-03	1	Plate-Mount, Latch
21	105-0023	2	Switch-Proximity
22	922112	2	Roller
23	ZCS1J025U	2	Screw-HSH
24	09-06-216	4	Adaptor-Bulkhead
25	111-3538	2	Adaptor
26	09392	2	Screw-HH
27	09395	2	Screw-HH
28	ZDH1J035U	4	Screw-HH
29	ZDH1P050U	8	Screw-HH
30	ZDH1E016U	4	Screw-HH
31	09479	6	Washer-Plain
32	09491	20	Washer-Plain
33	09555	6	Washer
34	09644	4	Washer-Spring
35	ZWQ1J000U	14	Washer-Plain
36	HY09485	6	Washer-Plain
37	09470	4	Washer
38	09480	2	Washer-Lock
40	70-13-077	2	Decal-Danger
41	70-13-072	1	Decal
42	111-3248	2	Pin-Pivot, Front Arm
43	111-3676	2	Spacer-Switch, Proximity
45	ZDH1L040U	2	Screw-HH
46	09599	2	Washer-Lock
47	111-4157	2	Stop-Bump
48	09397	2	Bolt
50	111-6822-03	2	Deflector-Arm, Mounted
51	09703	4	Bolt-HH
52	09364	2	Screw-HH
53	09262	12	Washer
54	09544	6	Nut-Nyloc
55	63-07-027	2	Zerk-Grease, BSP (90 DEG)

● Not illustrated

Center Arm Assembly

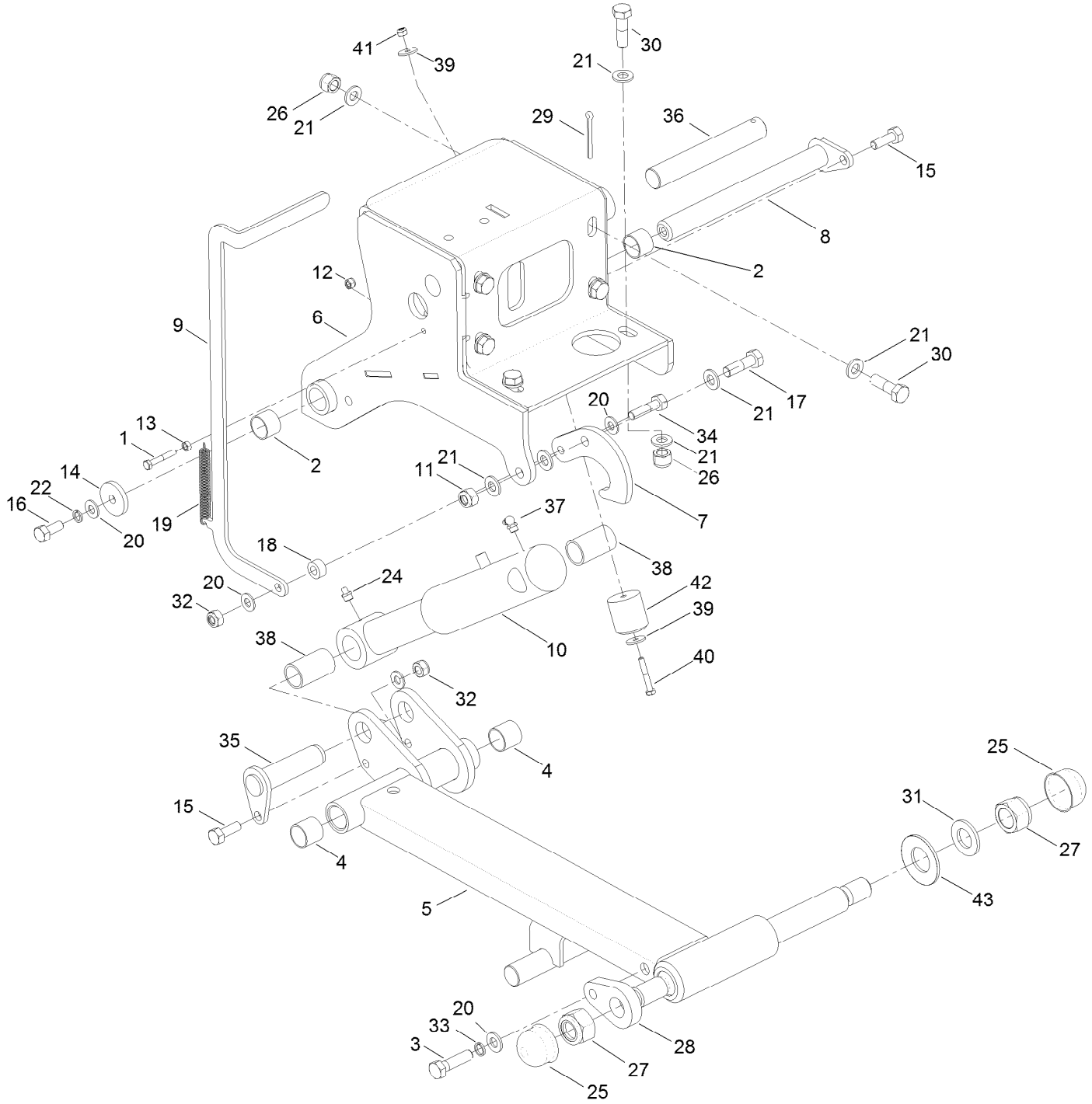

Center Arm Assembly (continued)

Ref.	Part Number	Qty.	Description
1	ZBH1F040U	1	Screw-HH
2	74-07-028	2	Bushing
3	ZBH1L045U	1	Screw-HH
4	876066	2	Bushing
5	111-5158-03	1	Center Arm ASM
6	111-5190-03	1	Center Arm Mount ASM
7	111-3099-01	1	Latch-Head, Center
8	111-3248	1	Pin-Pivot, Front Arm
9	111-3122-01	1	Handle-Head, Center
10	910109W	1	Cylinder-Lift
10:99	50-06-013	1	Seal Kit ●
11	09650	1	Nut-Hex, Nyloc
12	09544	1	Nut-Nyloc
13	09437	1	Nut
14	111-3366	1	Plate-Retaining, Bush
15	09392	2	Screw-HH
16	09395	1	Screw-HH
17	ZDH1L035U	1	Screw-HH
18	111-3457	1	Spacer-Latch, Center Head
19	111-3329	1	Spring-Latch, Center Head
20	ZWQ1J000U	7	Washer-Plain
21	HY09485	17	Washer-Plain
22	09480	1	Washer-Lock
24	10-11-017	1	Fitting-Straight
25	10-11-100	2	Cap-Nut
26	ZNN1L000U	6	Nut-Nyloc
27	ZNN1X000U	2	Nut-Hex, Nyloc
28	63-01-185W	1	Retainer-Pin
29	74-11-003	2	Pin-Split
30	09415	6	Screw-HH
31	09555	3	Washer
32	ZNN1J000U	3	Nut-Hex, NI
33	09599	1	Washer-Lock
34	09611	1	Bolt-HH
35	74-05-108	1	Pin-Wing, Arm
36	111-5212	1	Pin-Plain
37	63-07-027	1	Zerk-Grease, BSP (90 DEG)
38	25-07-007	2	Bushing-Tension
39	09263	2	Washer
40	ZBH1F040U	1	Screw-HH
41	09438	1	Nut-Nyloc
42	61-07-003	1	Buffer-Rubber
43	767815	1	Washer-Belleville

● Not illustrated

Roll-Over Protection System Assembly

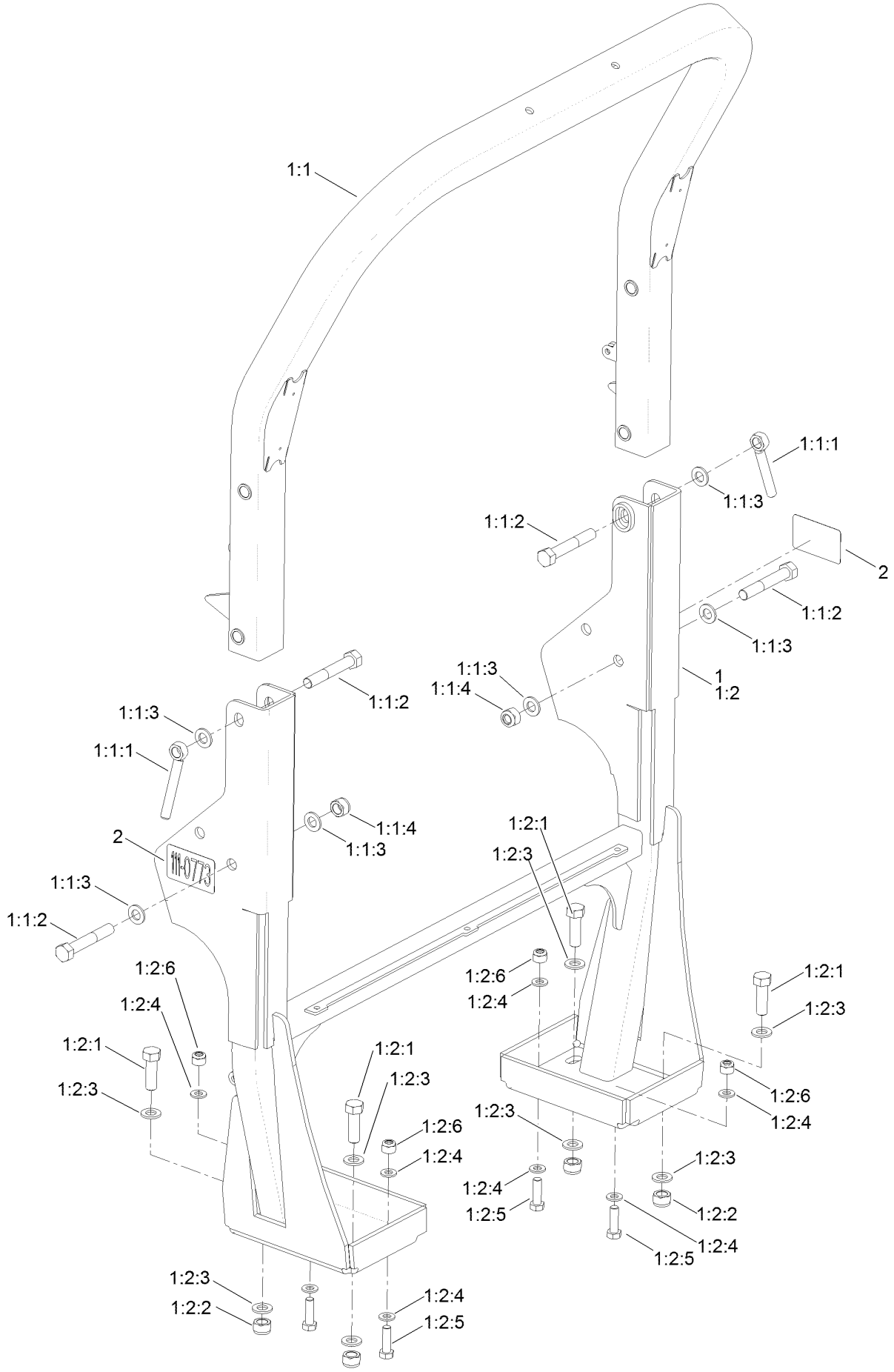

Roll-Over Protection System Assembly (continued)

Ref.	Part Number	Qty.	Description
1	111-7250	1	ROPS ASM
1:1	111-7236	1	Hoop-Upper, ROPS
1:1:1	956016	2	Nut-Hand
1:1:2	ZBH1P100U	4	Bolt
1:1:3	09491	6	Washer-Plain
1:1:4	09456	2	Nut
1:2	111-7238	1	ROPS-Lower

Ref.	Part Number	Qty.	Description
1:2:1	111-3484	4	Screw-HH
1:2:2	09456	4	Nut
1:2:3	09491	8	Washer-Plain
1:2:4	HY09485	8	Washer-Plain
1:2:5	ZDH1L040U	4	Screw-HH
1:2:6	ZNN1L000U	4	Nut-Nyloc
2	111-0773	2	Decal

Hydraulic Oil Tank Assembly

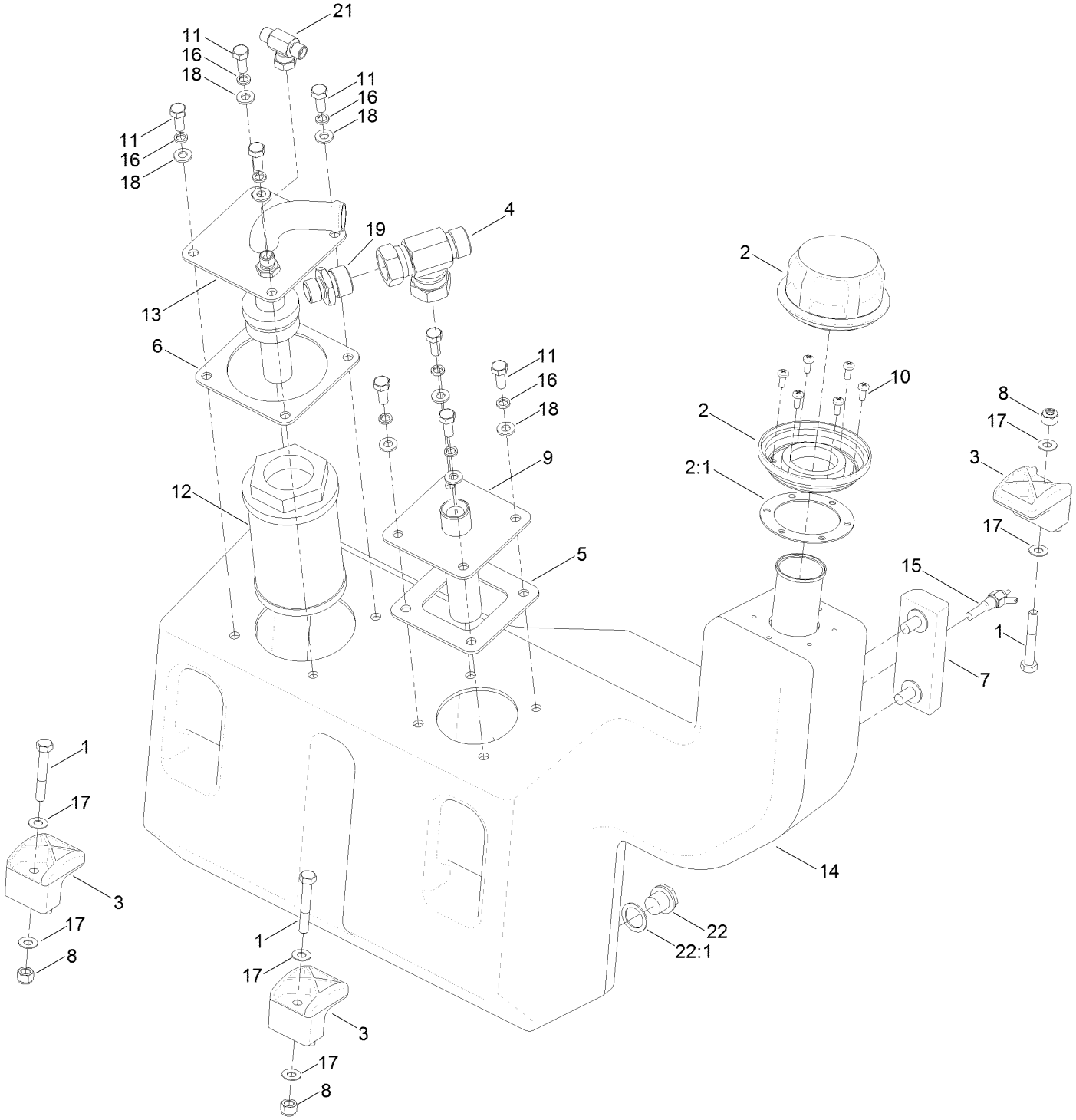

Hydraulic Oil Tank Assembly (continued)

Ref.	Part Number	Qty.	Description
1	09565	3	Screw-HH
2	HY910601	1	Cap-Breather, Filler
2:1	910648	1	Cap-Gasket, Filler
3	107-4543	3	Clamp
4	60-06-009	1	Adaptor-Tee
5	111-3387	1	Gasket-Flange, Return
6	111-3386	1	Gasket-Flange, Suction
7	65-06-018	1	Gauge-Level, Oil
8	09442	3	Nut
9	111-3230-03	1	Flange-Return
10	09634	6	Screw-PPH, HD
11	09368	8	Screw-HH
12	10-06-025	1	Filter-Suction
13	111-5155-03	1	Suction Flange ASM
14	111-3034	1	Tank-Oil, HYD
15	940852	1	Switch-Temperature
16	03469	8	Washer-Spring
17	09475	6	Washer
18	ZWP1H000U	8	Washer-Plain
19	09-06-201	1	Adaptor
21	60-06-011	1	Tee-BSP
22	20-06-207	1	Plug-Magnetic
22:1	111-7925	1	Washer-Fiber
99	10-11-033	2	Clamp-Hose, Hi-Torque ●

● Not illustrated

Lift Manifold Assembly

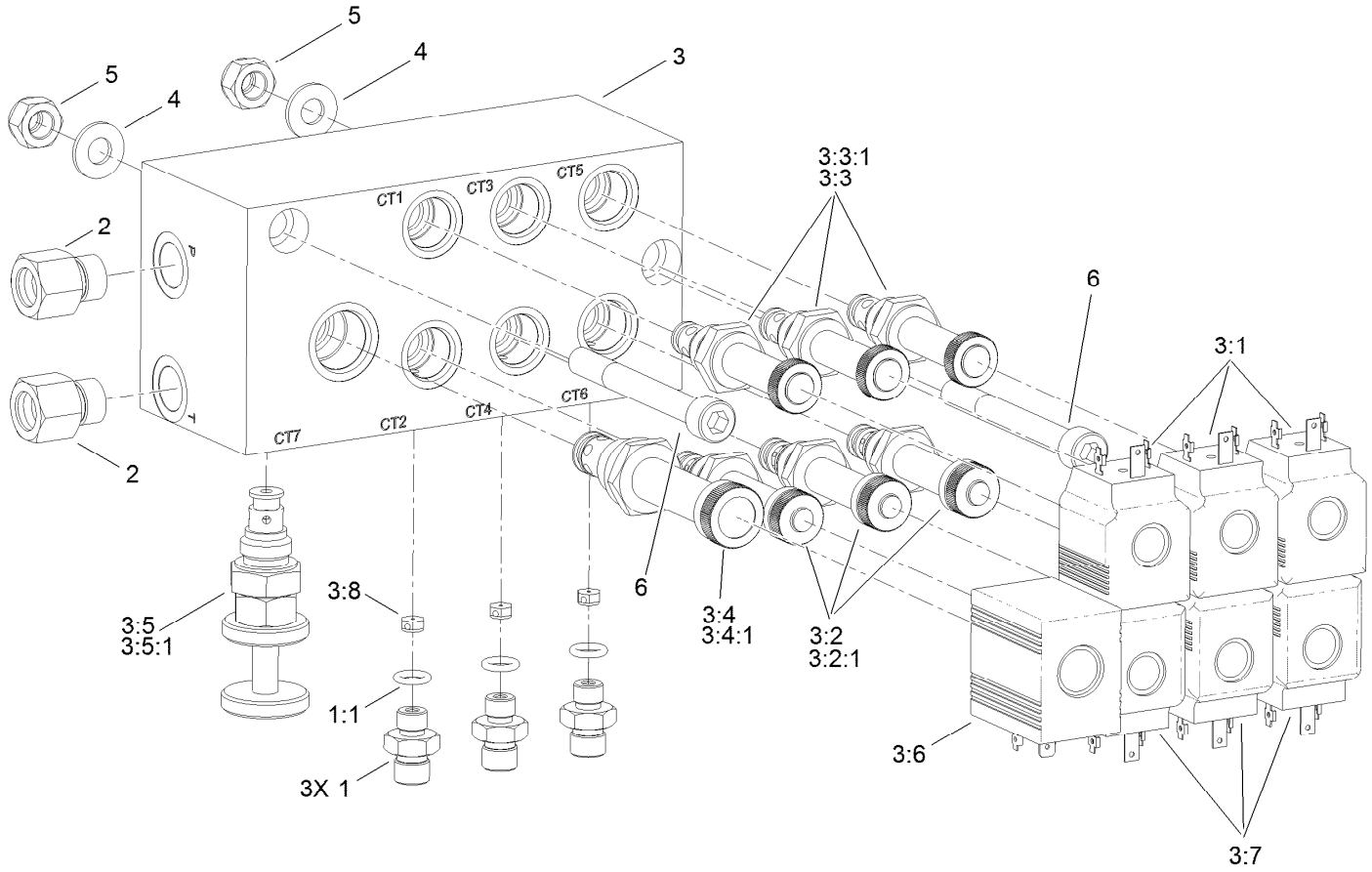

Lift Manifold Assembly (continued)

Ref.	Part Number	Qty.	Description
1	950750	3	Adaptor
1:1	70-06-163	1	Seal-O Ring
2	111-3509	2	Adaptor
3	111-3435	1	Manifold-Control, Lift
3:1	111-3434	3	Solenoid
3:2	111-3436	3	Valve-Solenoid
3:2:1	111-4902	1	Seal Kit
3:3	111-3437	3	Valve-Solenoid
3:3:1	111-4902	1	Seal Kit
3:4	111-3438	1	Valve-Solenoid
3:4:1	111-4903	1	Seal Kit
3:5	111-3439	1	Needle-Valve
3:5:1	111-4904	1	Seal Kit
3:6	111-3440	1	Solenoid
3:7	111-3688	3	Solenoid Coil
3:8	111-3689	3	Plate-Orifice (2 Way)
4	ZWQ1J000U	2	Washer-Plain
5	ZNN1J000U	2	Nut-Hex, NI
6	111-3520	2	Screw-HSH

Hydraulic Transimission Manifold Assembly

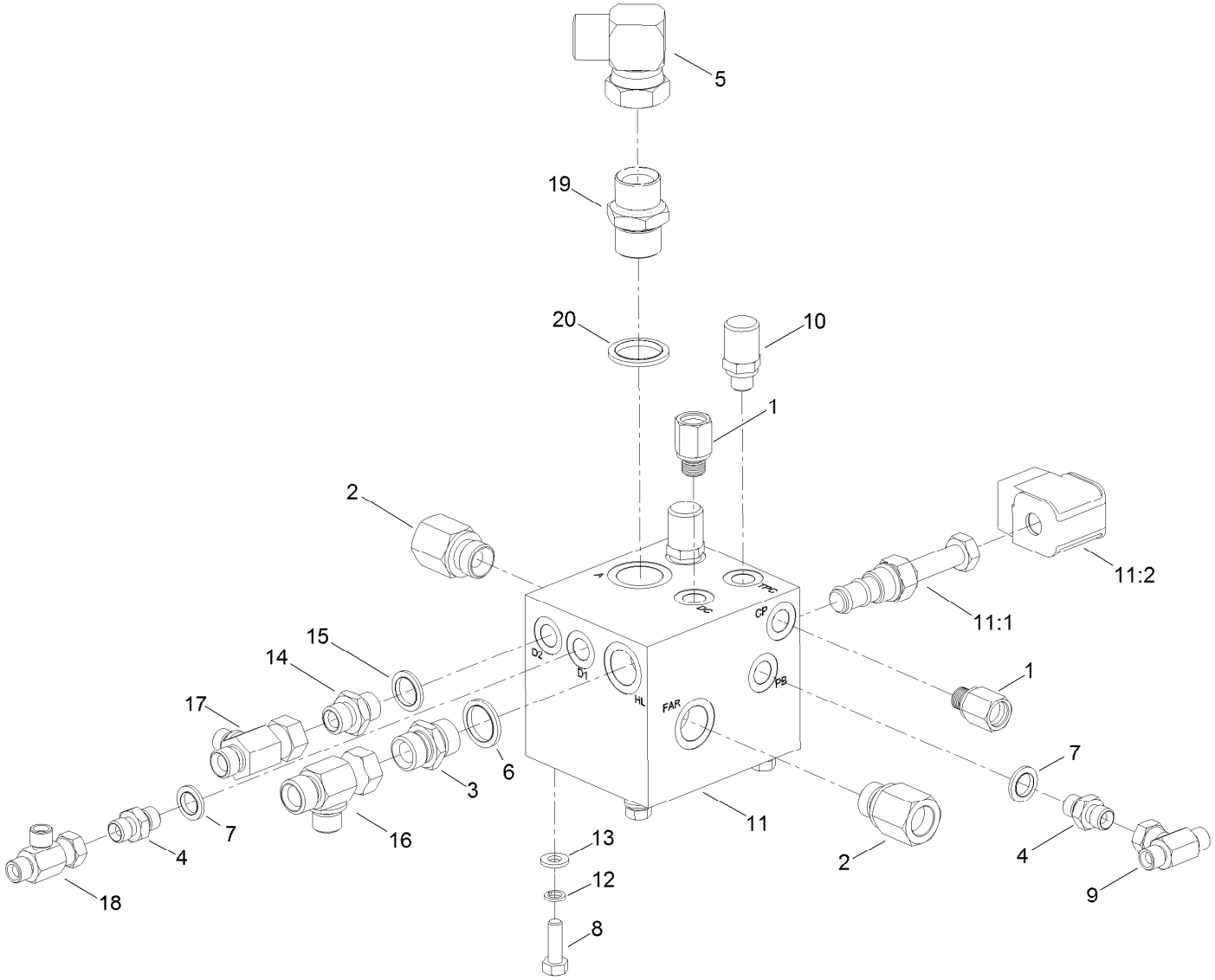

Hydraulic Transimission Manifold Assembly (continued)

Ref.	Part Number	Qty.	Description
1	111-3538	2	Adaptor
2	111-3529	2	Adaptor
3	10-06-078	1	Adaptor-BSPP
4	10-06-085	2	Adaptor
5	111-4443	1	Elbow-BSP
6	10-06-032	1	Seal-Dowty
7	10-06-030	2	Seal-Dowty
8	03162	4	Screw-HH
9	60-06-011	1	Tee-BSP
10	910615	2	Point-BSPP
11	111-2555	1	Manifold-Transmission
11:1	111-3533	1	Valve-Solenoid

Ref.	Part Number	Qty.	Description
11:1:1	910633	1	Seal Kit ●
11:2	910627	1	Coil-Solenoid
12	03469	4	Washer-Spring
13	ZWP1H000U	4	Washer-Plain
14	10-06-042	1	Adaptor-BSPP
15	10-06-031	1	Seal-Dowty
16	953732	1	Tee-BSP
17	953806	1	Tee
18	10-06-083	1	Fitting-Tee
19	10-06-044	1	Adaptor-BSP
20	10-06-033	1	Seal-Dowty

● Not illustrated

Transmission and Tandem Pump Assembly

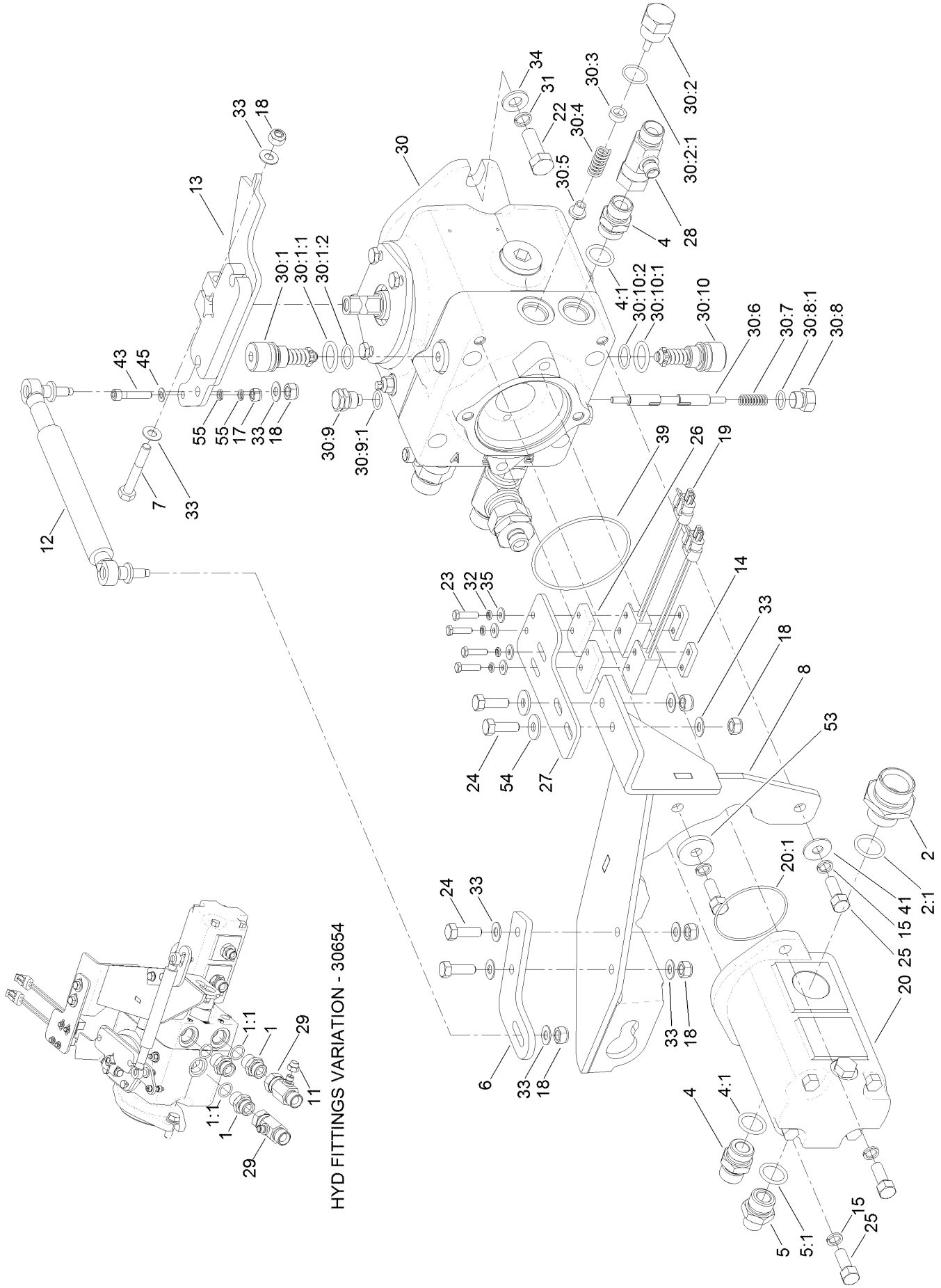

Transmission and Tandem Pump Assembly (continued)

Ref.	Part Number	Qty.	Description
1	70-06-050	3	Adaptor-Boss
1:1	70-06-168	1	Seal-O Ring
2	70-06-236	1	Adaptor-BSPP, 1 Inch
2:1	70-06-168	1	Seal-O Ring
4	63-06-104	2	Adaptor-BSP
4:1	63-06-111	1	Seal-O Ring
5	70-06-053	1	Adaptor-Boss
5:1	63-06-111	1	Seal-O Ring
6	111-6853-03	1	Adjuster-Damper
7	09565	1	Screw-HH
8	111-6456-03	1	Bracket-Control, Pump
11	66-06-003	1	Cap-BSP
12	111-7130	1	*obs* Damper
13	111-6814	1	Lever-Control, Pump
14	111-3336	2	Bar-Switch, Proximity
15	09273	4	Washer-Spring
17	09544	1	Nut-Nyloc
18	09441	7	Nut-Hex, NI
19	105-0023	2	Switch-Proximity
20	111-3553	1	*obs* Tandem Pump ASM
20:1	70-06-028	1	O-Ring
20:99	70-06-153	1	Seal Kit ●
22	ZDH1L035U	2	Screw-HH
23	ZDH1E020U	4	Screw-HH
24	03162	4	Screw-HH
25	HY103653	4	Screw-HH
26	111-3676	2	Spacer-Switch, Proximity
27	111-3260-03	1	Adjuster-Switches
28	74-06-019	1	Adaptor-Tee
29	111-3639	2	Tee-BSP
30	111-6774	1	Pump-Transmission
30:1	111-3379	1	Valve-Pressure Relief, 345 Bar
30:1:1	111-4906	1	O-Ring
30:1:2	111-4925	1	O-Ring
30:2	111-3378	1	Plug-Charge Pressure Relief
30:2:1	111-4920	1	O-Ring, Charge Relief Plug
30:3	111-4908	1	Shim Kit ASM
30:4	111-4918	1	Spring-Charge, Prv
30:5	111-4919	1	Poppet-Charge, Prv
30:6	111-3380	1	Valve-Flushing, Loop
30:7	111-4917	1	Spring-Valve, Loop (Flushing)
30:8	111-4916	1	Plug-Loop Flushing Valve
30:8:1	111-4928	1	O-Ring
30:9	111-6776	1	Plug-Flush
30:9:1	111-4928	1	O-Ring
30:10	111-6775	1	Valve-Pressure Relief, 300 Bar
30:10:1	111-4906	1	O-Ring
30:10:2	111-4925	1	O-Ring
31	09599	2	Washer-Lock
32	09644	4	Washer-Spring
33	09475	10	Washer
34	HY09485	2	Washer-Plain
35	09257	4	Washer
39	70-06-028	1	O-Ring
41	HY03355	1	Washer-Plated
43	111-4586	1	Screw-HSH
45	ZWP1F000U	1	Washer-Plain
53	65-01-559	1	Washer-Space
54	09267	2	Washer
55	09474	2	Washer-Spring

● Not illustrated

Cutter Component Assembly

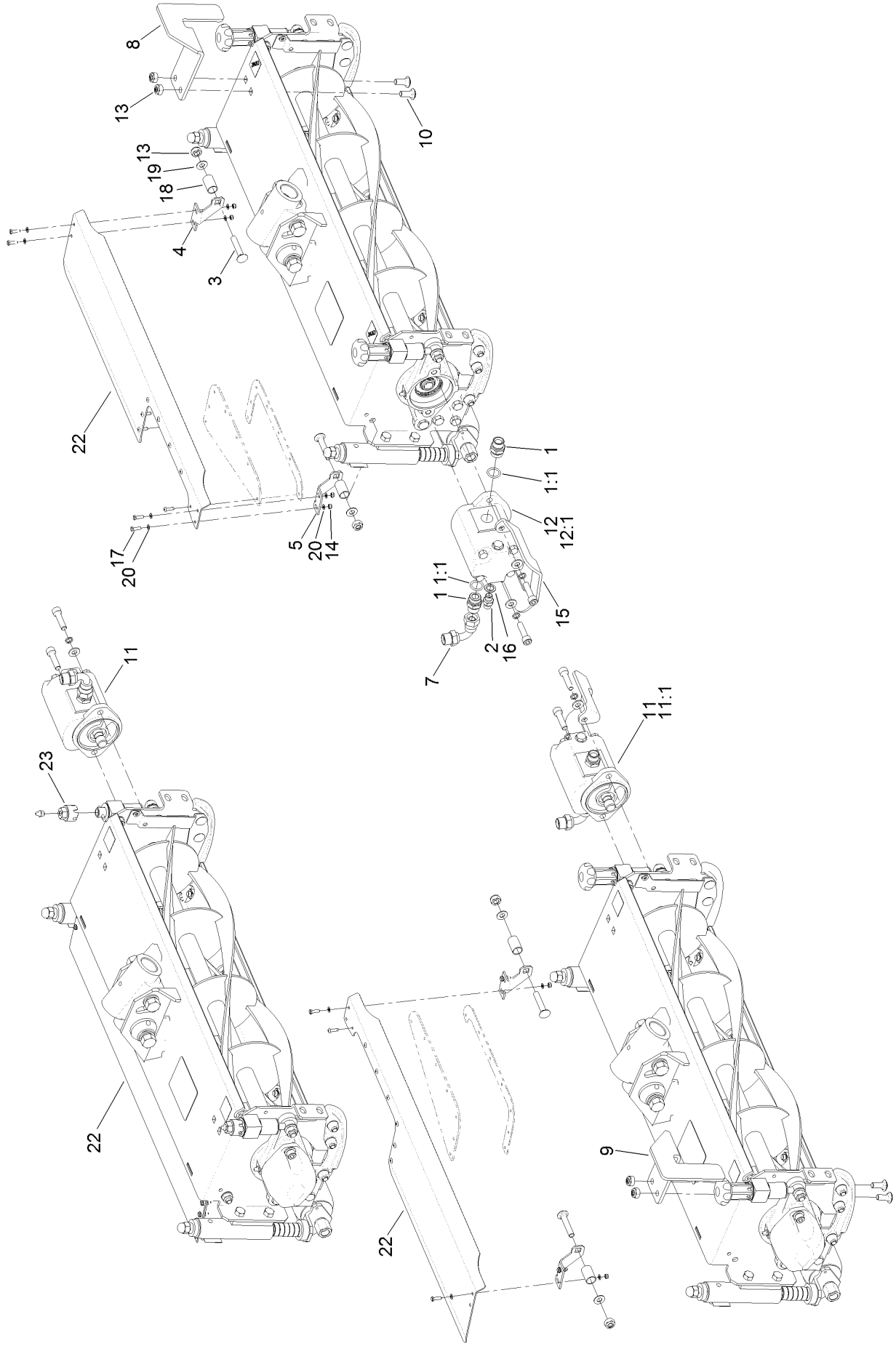

Cutter Component Assembly (continued)

Ref.	Part Number	Qty.	Description
1	63-06-104	6	Adaptor-BSP
1:1	63-06-111	1	Seal-O Ring
2	10-06-085	3	Adaptor
3	ZBK1J055U	6	Bolt-CARR
4	876041	3	Bracket-Deflector, LH
5	876042	3	Bracket-Deflector, RH
7	25-06-066	3	Elbow-BSP
8	876086W	1	Guard-HOC, LH
9	876087W	1	Guard-HOC, RH
10	15-11-003	4	Bolt-CARR
11	111-7445	2	HYD CW Motor ASM
11:1	111-8146	1	Seal Kit
11:2	107-7821	1	Valve-Anticavitation
12	111-7446	1	HYD CCW Motor ASM
12:1	111-8146	1	Seal Kit
12:2	107-7821	1	Valve-Anticavitation
13	ZNN1J000U	10	Nut-Hex, NI
14	09430	12	Nut-Nyloc
15	111-7462-03	2	Guard-Motor
16	10-06-030	3	Seal-Dowty
17	ZDH1E016U	12	Screw-HH
18	876049	6	Spacer-Deflector
19	09479	30	Washer-Plain
20	09470	24	Washer
21	HY922101	1	Spanner-Adjuster, Cutterhead ●
22	111-0177	3	Deflector Cab ASM Kit
23	111-3927	2	Boss-Adjuster

● Not illustrated

Cutter Control Manifold Assembly

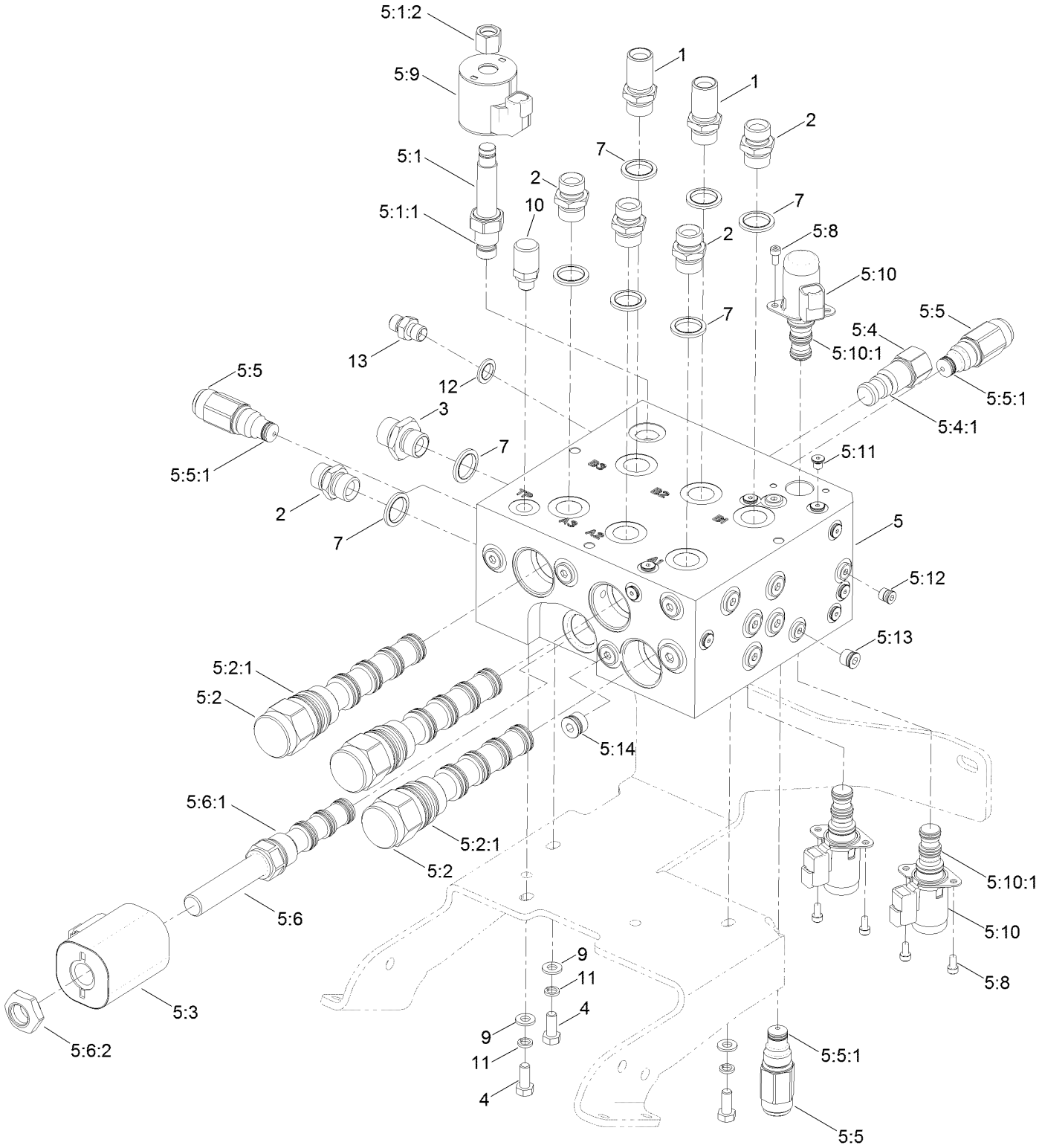

Cutter Control Manifold Assembly (continued)

Ref.	Part Number	Qty.	Description
1	09-06-216	2	Adaptor-Bulkhead
2	10-06-078	5	Adaptor-BSPP
3	950726	1	Adaptor-BSP
4	09368	3	Screw-HH
5	111-6597	1	Cutters Manifold ASM
5:1	111-6825	1	Pressure-Proportional, Relief Valve
5:1:1	111-6826	1	Seal Kit
5:1:2	119-2160	1	Nut-Coil
5:2	111-6829	3	Valve-Spool, Piloted
5:2:1	111-6830	1	Seal Kit
5:3	111-6831	1	Coil-12V
5:4	111-6832	1	Logic Element-Vented
5:4:1	111-6827	1	Seal Kit
5:5	111-6833	3	Relief Valve
5:5:1	111-6828	1	Seal Kit
5:6	111-6835	1	Valve-Solenoid
5:6:1	111-6836	1	Seal Kit
5:6:2	111-6840	1	Coil-Nut
5:8	115-8733	6	Screw-HSH
5:9	119-4619	1	Coil-Solenoid
5:10	125-7554	3	Valve-Solenoid
5:10:1	125-7561	1	Seal Kit
5:11	106-1024	14	Plug-Leak, Zero
5:12	106-1025	5	Plug-HYD
5:13	106-1026	14	Plug-HYD
5:14	106-1027	2	Plug-HYD
7	10-06-032	8	Seal-Dowty
9	ZWP1H000U	3	Washer-Plain
10	910615	1	Point-BSPP
11	03469	3	Washer-Spring
12	10-06-030	1	Seal-Dowty
13	10-06-085	1	Adaptor

Control Panel Assembly

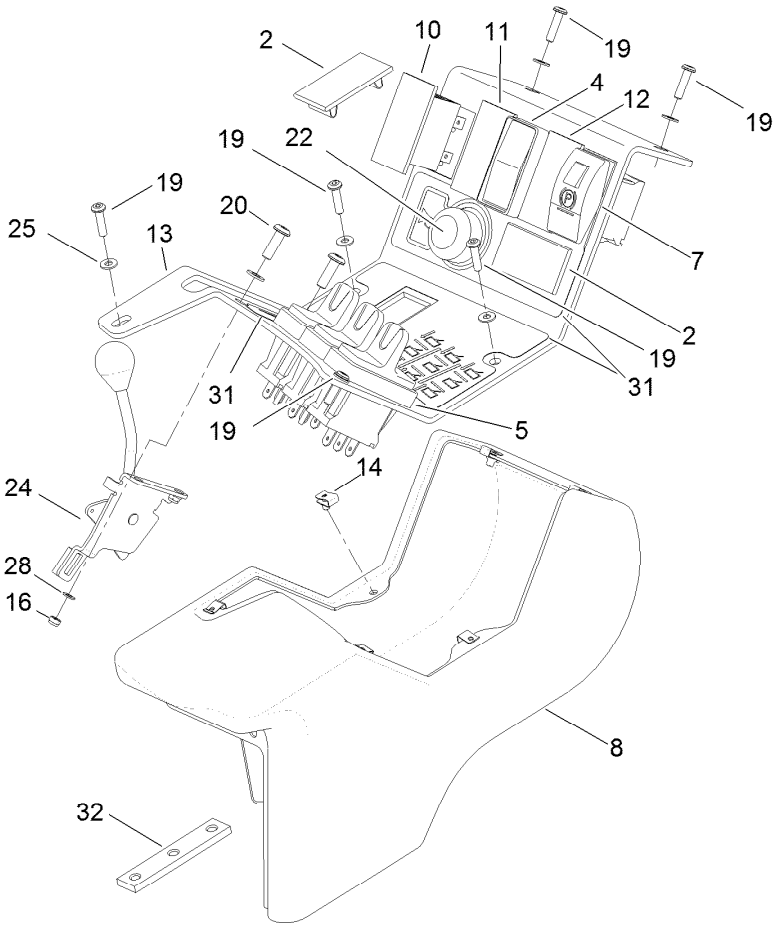

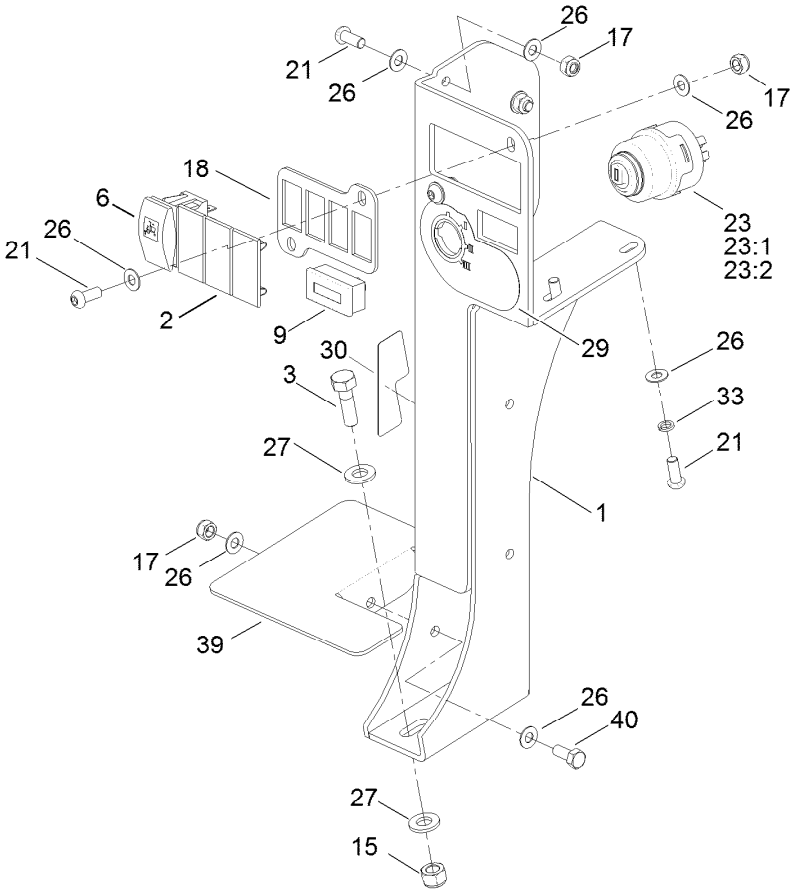

Control Panel Assembly (continued)

Ref.	Part Number	Qty.	Description
1	111-5166-03	1	Control Arm ASM
2	111-2337	5	Blank-Switch
3	09394	2	Bolt
4	111-2253	1	Switch-Cutters
5	111-2956	3	Switch-Lift
6	111-2451	1	Switch-Limited
7	111-2254	1	Switch-Parking Brake, On-None-On
8	111-3004	1	Pod-Control
9	111-3362	1	Meter-Hour
10	111-2333	1	Indicator-Illuminated
11	111-2334	1	Indicator-Illuminated
12	111-3026	1	Indicator-Illuminated
13	111-2963-03	1	Instrument-Panel
14	111-3079	6	U-Nut
15	09447	2	Nut
16	09430	2	Nut-Nyloc
17	09441	5	Nut-Hex, NI
18	111-3361-03	1	Plate-Switch
19	111-3473	6	Screw-Button
20	111-3381	2	Screw-HSBH
21	ZHS1H020U	6	Screw-HSBH
22	924618	1	Switch-Horn, Push
23	74-09-009	1	Switch-Ignition
23:1	74-09-017	1	Key-Ignition
23:2	74-09-010	1	Switch-Cover
24	111-7090	1	Cable-Throttle
25	09658	6	Washer
26	09475	12	Washer
27	HY09485	4	Washer-Plain
28	09470	4	Washer
29	111-3344	1	Decal-Switch, Ignition
30	111-3658	1	Decal-Latch, Cutterhead
31	111-3277	1	Decal
32	111-3281	1	Bar-Nut
33	03469	2	Washer-Spring
39	111-5239-03	1	Plate-Filler
40	09368	1	Screw-HH

Filter Assembly

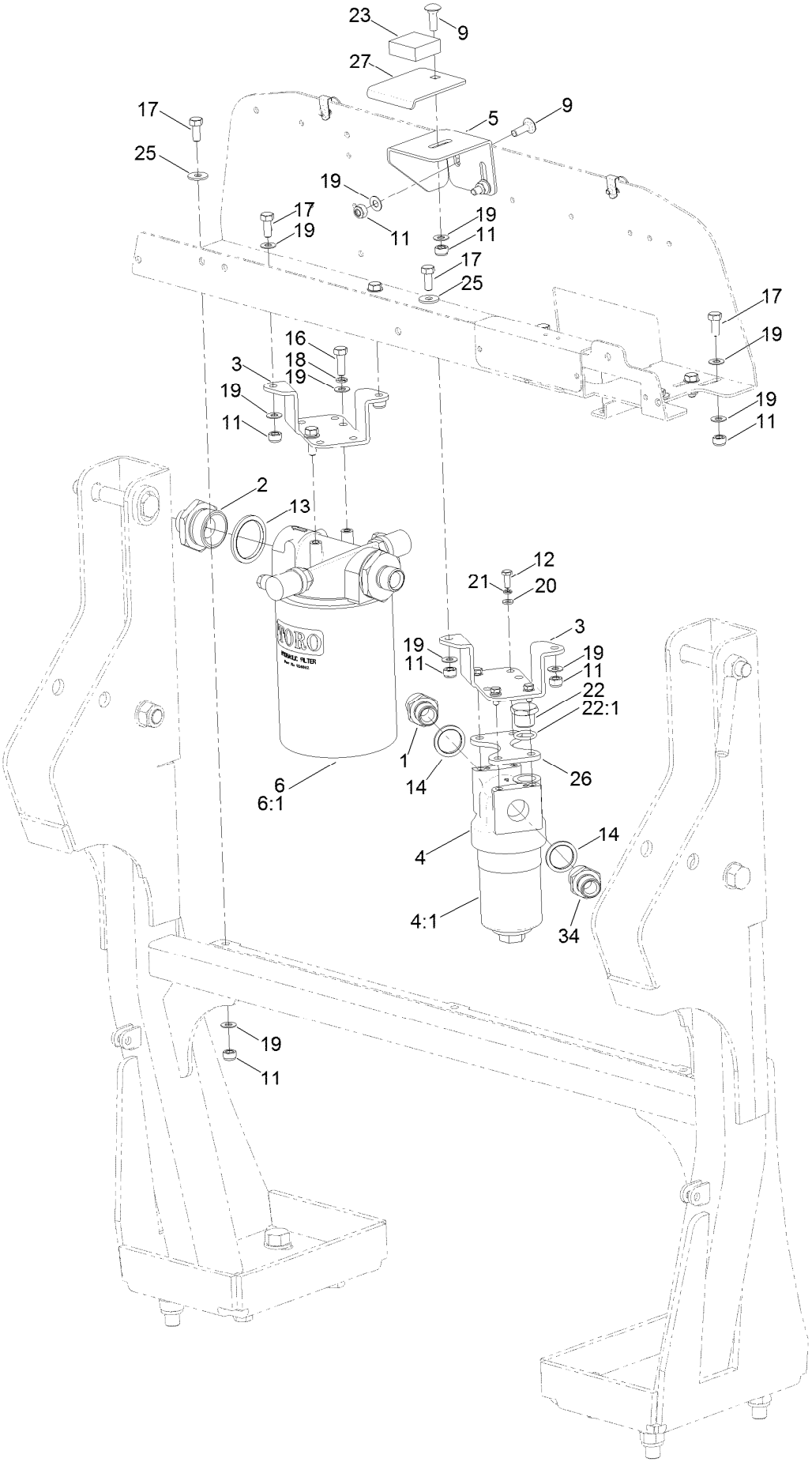

Filter Assembly (continued)

Ref.	Part Number	Qty.	Description
1	09-06-201	1	Adaptor
2	25-06-050	2	Adaptor
3	111-3485-03	2	Bracket-Filter, Oil
4	924708	1	Pressure Filter ASM
4:1	924709	1	Element-Filter, Pressure
4:2	924710	1	Indicator-Filter, Pressure ●
5	111-6095-03	1	Plate-Latch, Bulkhead
6	111-7508	1	Return Filter ASM
6:1	924692	1	Element-Filter
9	09373	3	Bolt-Coach
11	09441	12	Nut-Hex, NI
12	09362	4	Screw-HH
13	10-06-035	2	Seal-Dowty
14	10-06-033	2	Seal-Dowty
16	03162	2	Screw-HH
17	09368	7	Screw-HH
18	03469	2	Washer-Spring
19	09475	18	Washer
20	09472	4	Washer-Plain
21	09474	4	Washer-Spring
22	111-3926	1	Plug
22:1	63-06-111	1	Seal-O Ring
23	488023	1	Pad-Foam, Short
25	09267	3	Washer
26	111-4843-03	1	Spacer-Oil Filter
27	111-6096-03	1	Plate-Latch, Bonnet
34	994626	1	Adaptor-BSPP

● Not illustrated

Loom Kit

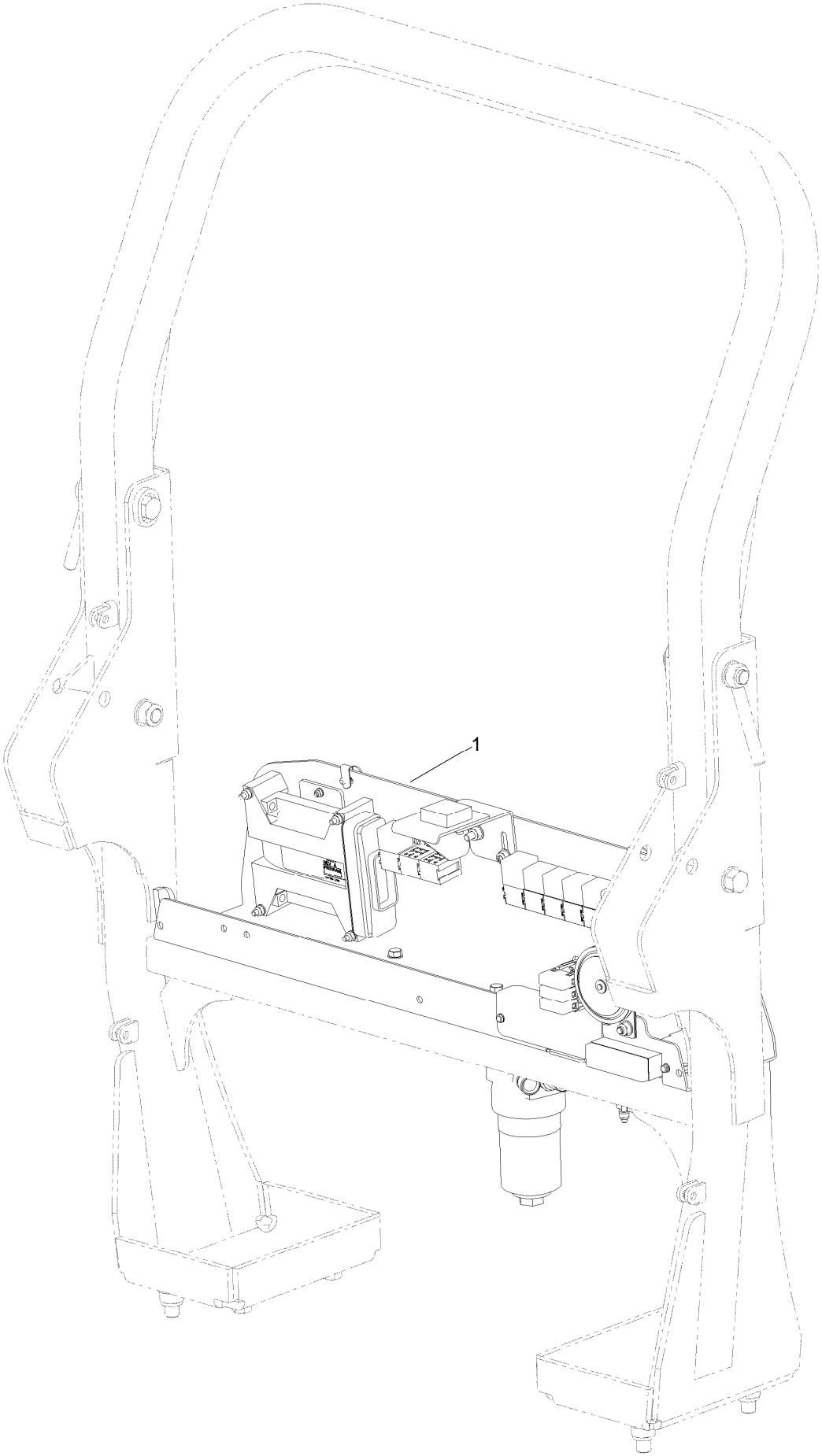

Loom Kit (continued)

Ref.	Part Number	Qty.	Description
1	111-7282	1	Kit-Loom
99	HY3966	30	Tie-Cable ●

● Not illustrated

Electrical Assembly

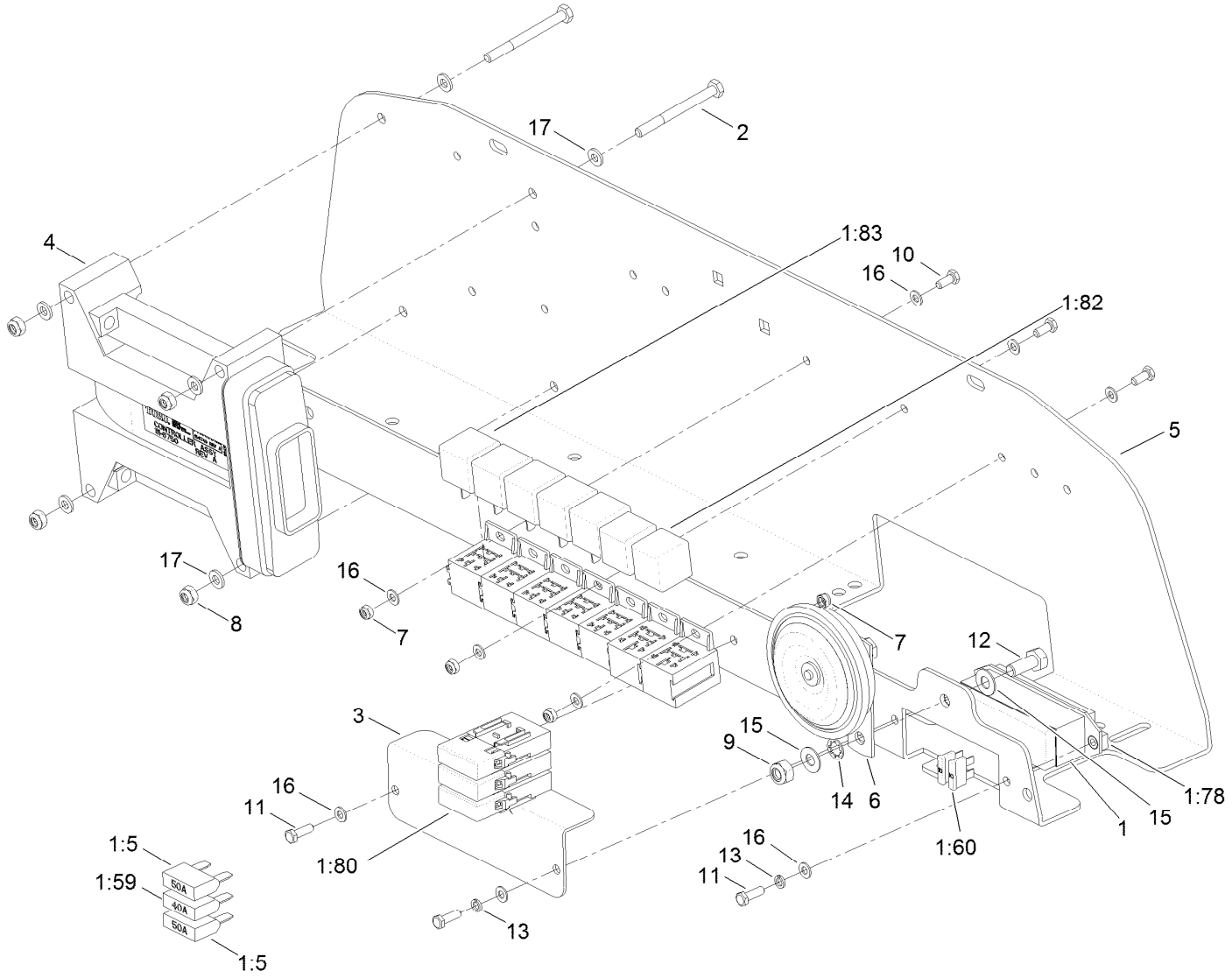

Electrical Assembly (continued)

Ref.	Part Number	Qty.	Description
1	111-6461	1	Harness-Main
1:5	995714	2	Fuse-50A
1:59	111-2898	1	Fuse-40A
1:60	70-09-026	3	Fuse-10A
1:78	70-09-096	1	Box-Fuse
1:80	111-0302	3	Cover
1:82	924625	2	Relay-70A
1:83	111-0336	5	Relay-30A
2	09703	4	Bolt-HH
3	111-4842-03	1	Bracket-Fuse
4	111-6750	1	Controller ASM
5	111-3037-03	1	Plate-Base, Electrical
6	70-09-108	1	Horn ASM
7	09430	4	Nut-Nyloc
8	09438	4	Nut-Nyloc
9	09441	1	Nut-Hex, NI
10	ZDH1E012U	3	Screw-HH
11	ZDH1E016U	3	Screw-HH
12	09368	1	Screw-HH
13	09644	2	Washer-Spring
14	09476	2	Washer-Shakeproof
15	09475	2	Washer
16	09470	10	Washer
17	09472	8	Washer-Plain
99	111-6745	1	Harness-Manifold, Cutters ●

● Not illustrated

Rear Transmission Block Assembly

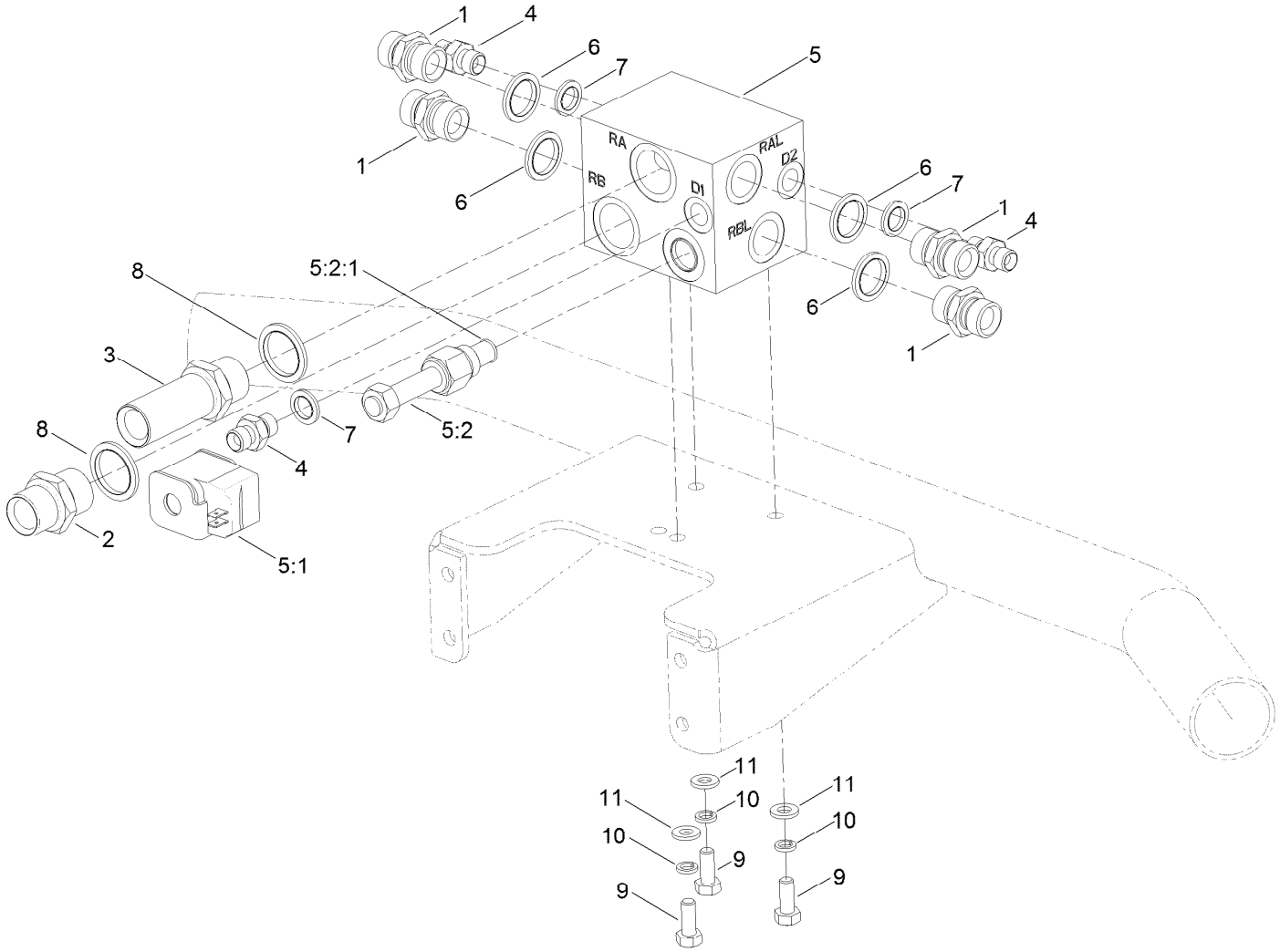

Rear Transmission Block Assembly (continued)

Ref.	Part Number	Qty.	Description
1	10-06-078	4	Adaptor-BSPP
2	10-06-044	1	Adaptor-BSP
3	111-7494	1	Adaptor-BSP
4	10-06-085	3	Adaptor
5	924687	1	Manifold-Transmission, Rear
5:1	910627	1	Coil-Solenoid
5:2	924688	1	Valve-Solenoid
5:2:1	910642	1	Seal Kit
6	10-06-032	4	Seal-Dowty
7	10-06-030	3	Seal-Dowty
8	10-06-033	2	Seal-Dowty
9	09368	3	Screw-HH
10	03469	3	Washer-Spring
11	ZWP1H000U	3	Washer-Plain

Hood Assembly

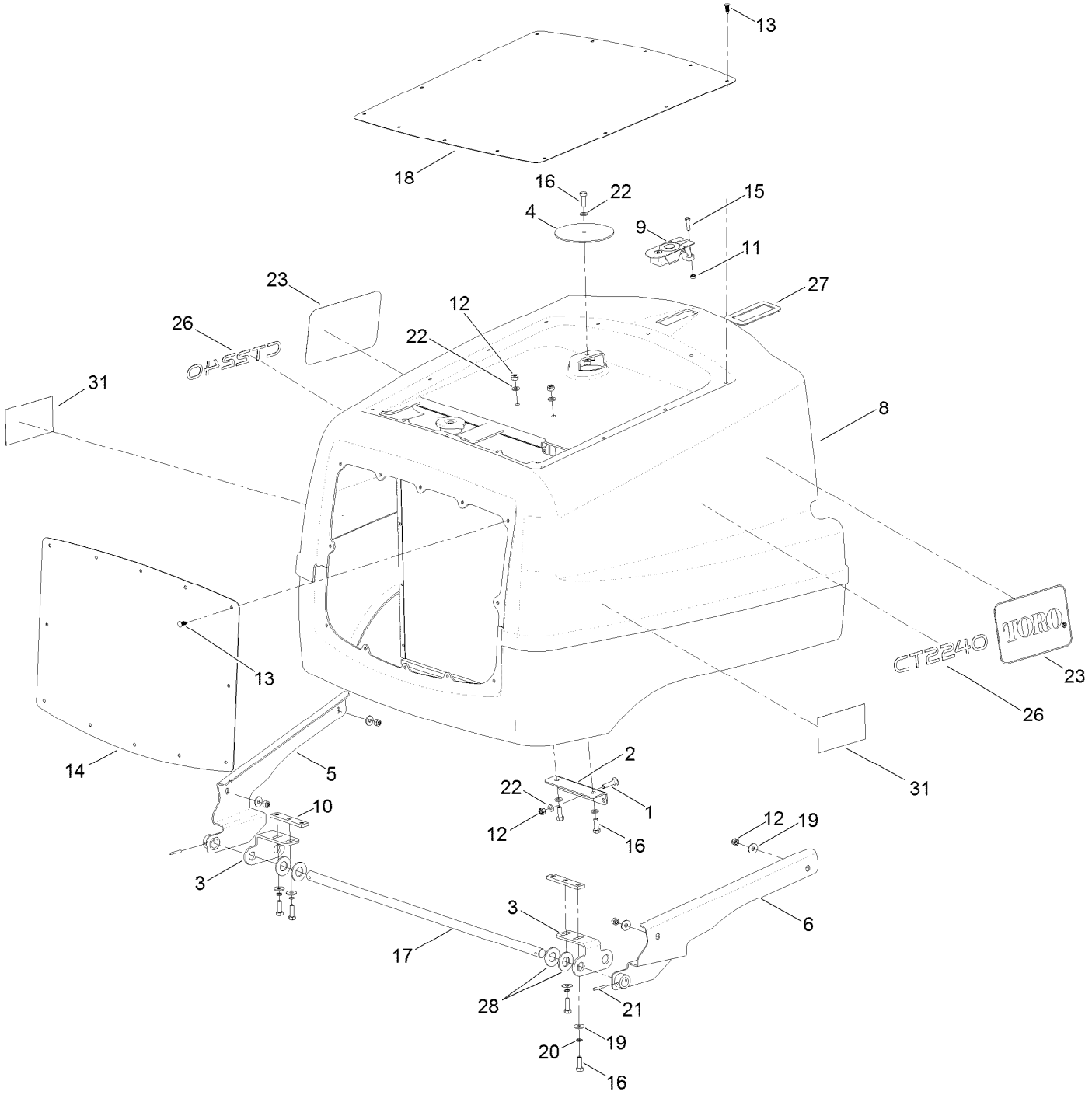

Hood Assembly (continued)

Ref.	Part Number	Qty.	Description
1	09369	1	Screw-HH
2	111-2111-03	1	Bracket-Engine, Cover
3	111-7483-03	2	Bracket, Hinge-Shaft
4	111-3557-03	1	Cover-Air, Intake
5	111-3490-03	1	Hinge-Cover, Engine (LH)
6	111-3491-03	1	Hinge-Cover, Engine (RH)
8	111-6920	1	Cover-Engine
9	950831	1	Latch-Sealed, Lever
10	111-3281	2	Bar-Nut
11	09437	1	Nut
12	09441	8	Nut-Hex, NI
13	117-2382	26	Plug-Plastic
14	111-6919-03	1	Screen-Rear
15	09364	1	Screw-HH
16	03162	4	Screw-HH
17	111-7482	1	Shaft-Hinge, Cover
18	111-6918-03	1	Screen-Top
19	09267	11	Washer
20	03469	4	Washer-Spring
21	74-11-003	2	Pin-Split
22	ZWP1H000U	4	Washer-Plain
23	111-3728	2	Decal
26	111-7311	2	Decal
27	111-4158-03	1	Plate-Support, Latch
28	09499	4	Washer
31	94-8099	2	Decal
99	111-7488	5	Seal-Cover, Screen

Transmission Hydraulic Circuit Assembly

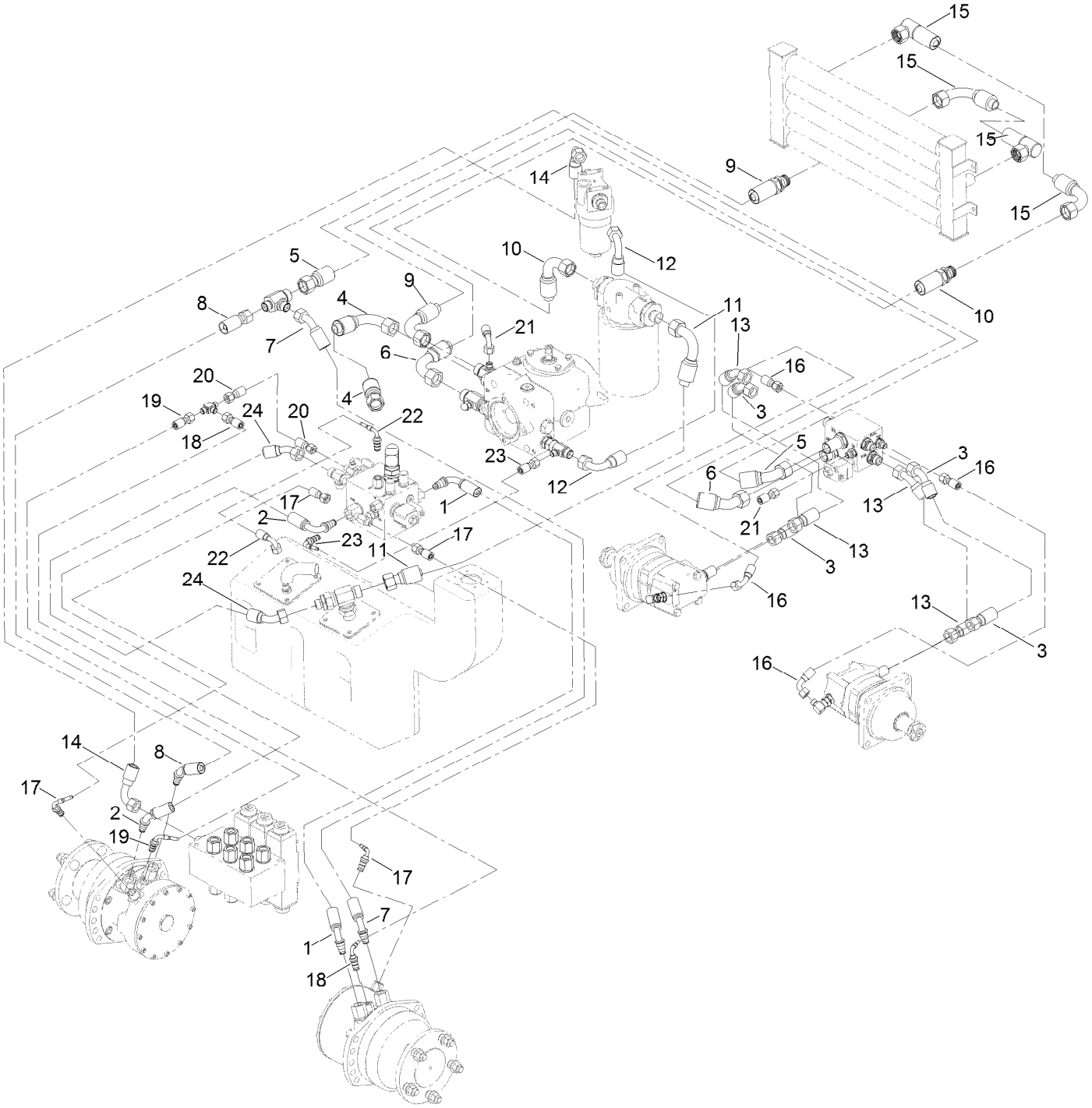

Transmission Hydraulic Circuit Assembly (continued)

Ref.	Part Number	Qty.	Description
1	111-4473	1	Hose
2	111-5521	1	Hose
3	111-3576	2	Hose
4	111-3577	1	Hose
5	111-3578	1	Hose
6	111-3579	1	Hose
7	111-5524	1	Hose
8	111-4477	1	Hose
9	111-3586	1	Hose
10	111-3587	1	Hose
11	111-3588	1	Hose
12	111-3593	1	Hose
13	111-3595	2	Hose
14	111-6950	1	Hose
15	111-3599	2	Hose
16	111-3604	2	Hose
17	111-5523	2	Hose
18	111-3606	1	Hose
19	111-3607	1	Hose
20	111-3608	1	Hose
21	111-3610	1	Hose
22	111-3619	1	Hose
23	111-3621	1	Hose
24	111-3622	1	Hose

Lift/Steer Hydraulic Circuit Assembly

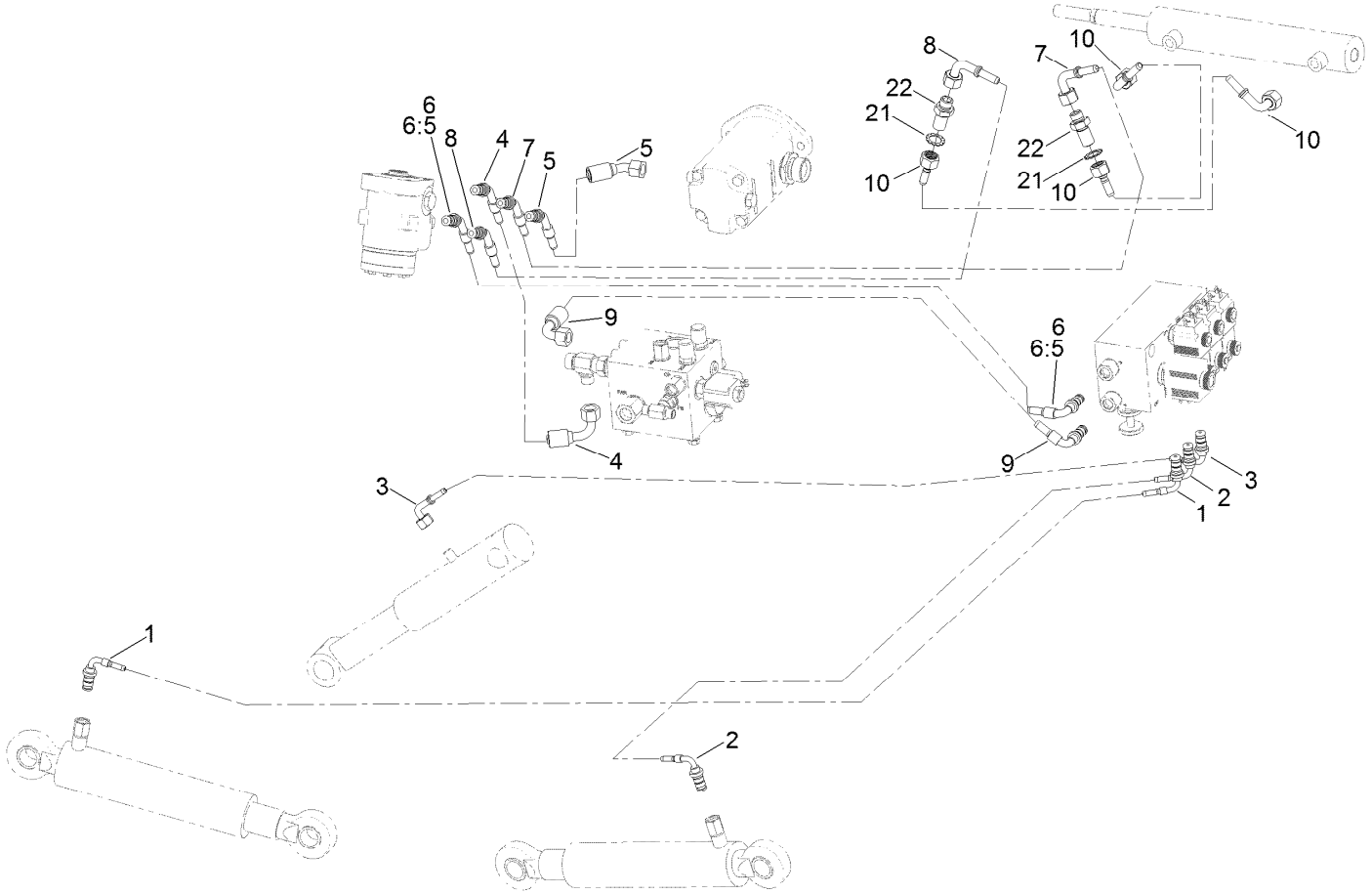

Lift/Steer Hydraulic Circuit Assembly (continued)

Ref.	Part Number	Qty.	Description
1	111-3602	1	Hose
2	111-3603	1	Hose
3	111-3611	1	Hose
4	111-3613	1	Hose
5	111-3614	1	Hose
6	111-3615	1	Hose
6:5	111-3509	2	Adaptor
7	111-7538	1	Hose
8	111-7539	1	Hose
9	111-3618	1	Hose
10	111-7537	2	Hose

Cutters Hydraulic Circuit Assembly

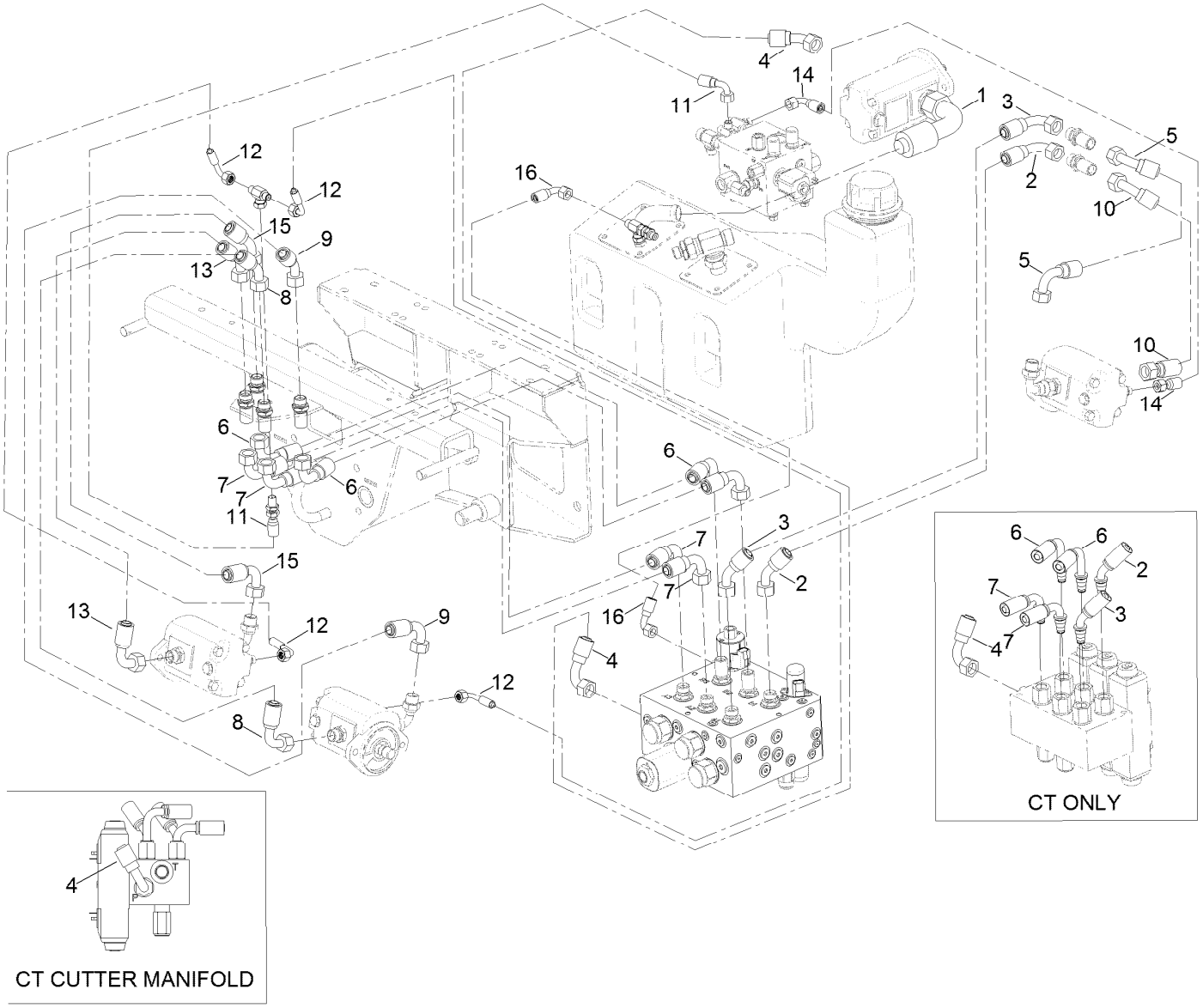

Cutters Hydraulic Circuit Assembly (continued)

Ref.	Part Number	Qty.	Description
1	111-3571	1	Hose
2	111-6766	1	Hose
3	111-6767	1	Hose
4	111-7407	1	Hose
5	111-6769	1	Hose
6	111-6770	2	Hose
7	111-6771	2	Hose
8	111-4135	1	Hose
8:4	07809	2	Sock-Hose ●
9	111-4133	1	Hose
9:3	07809	2	Sock-Hose ●

Ref.	Part Number	Qty.	Description
10	111-6772	1	Hose
11	111-3597	1	Hose
12	111-4159	2	Hose
13	111-4136	1	Hose
13:4	07809	2	Sock-Hose ●
14	111-3609	1	Hose
15	111-4134	1	Hose
15:4	07809	2	Sock-Hose ●
16	111-6773	1	Hose
17	30-06-201	1	Tee ●

● Not illustrated

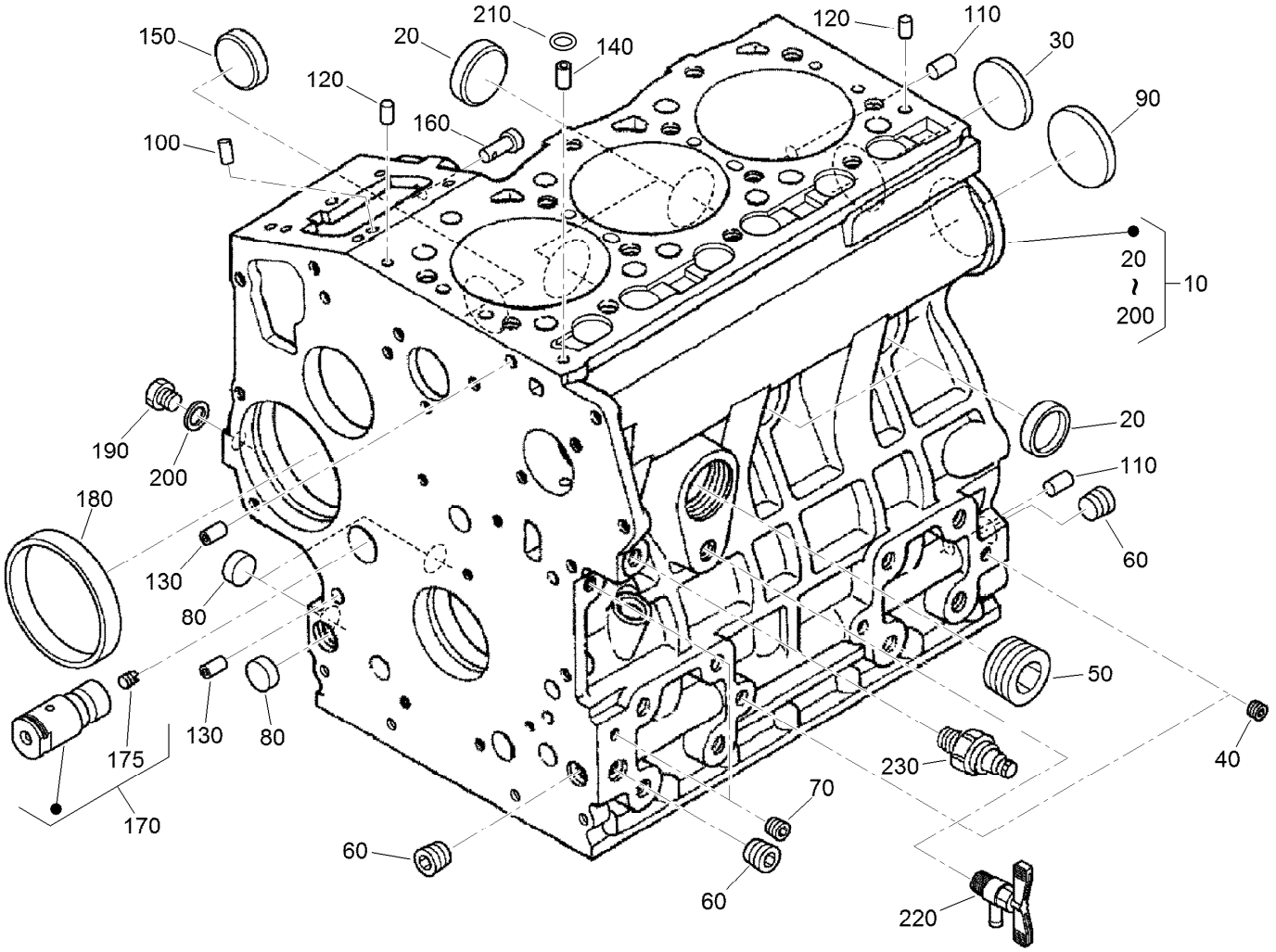

Crankcase Assembly

Ref.	Part Number	Qty.	Description
10	130-1566	1	Crankcase ASM
20	98-9398	4	Cap-Sealing
30	98-7539	1	Cap-Sealing
40	98-9687	3	Plug
50	105-3779	1	Plug
60	98-9597	3	Plug
70	98-7487	2	Plug
80	98-9379	3	Plug-Expansion
90	98-9668	1	Plug-Expansion
100	98-9375	2	Pin-Straight
110	98-9377	2	Pin-Straight
120	98-9376	2	Pin-Straight

Ref.	Part Number	Qty.	Description
130	98-9387	2	Pin-Pipe
140	98-9539	1	Pin-Pipe
150	98-9599	1	Plug
160	98-9630	1	Pin-Spring, Start
170	130-1237	1	Idler Shaft ASM
175	98-7449	1	Screw-Set
180	98-9656	1	Bushing-Governor, Gear
190	98-7507	1	Plug
200	98-7428	1	Gasket
210	98-7509	1	O-Ring
220	98-9436	1	Drain Cock ASM
230	98-7764	1	Switch-Oil

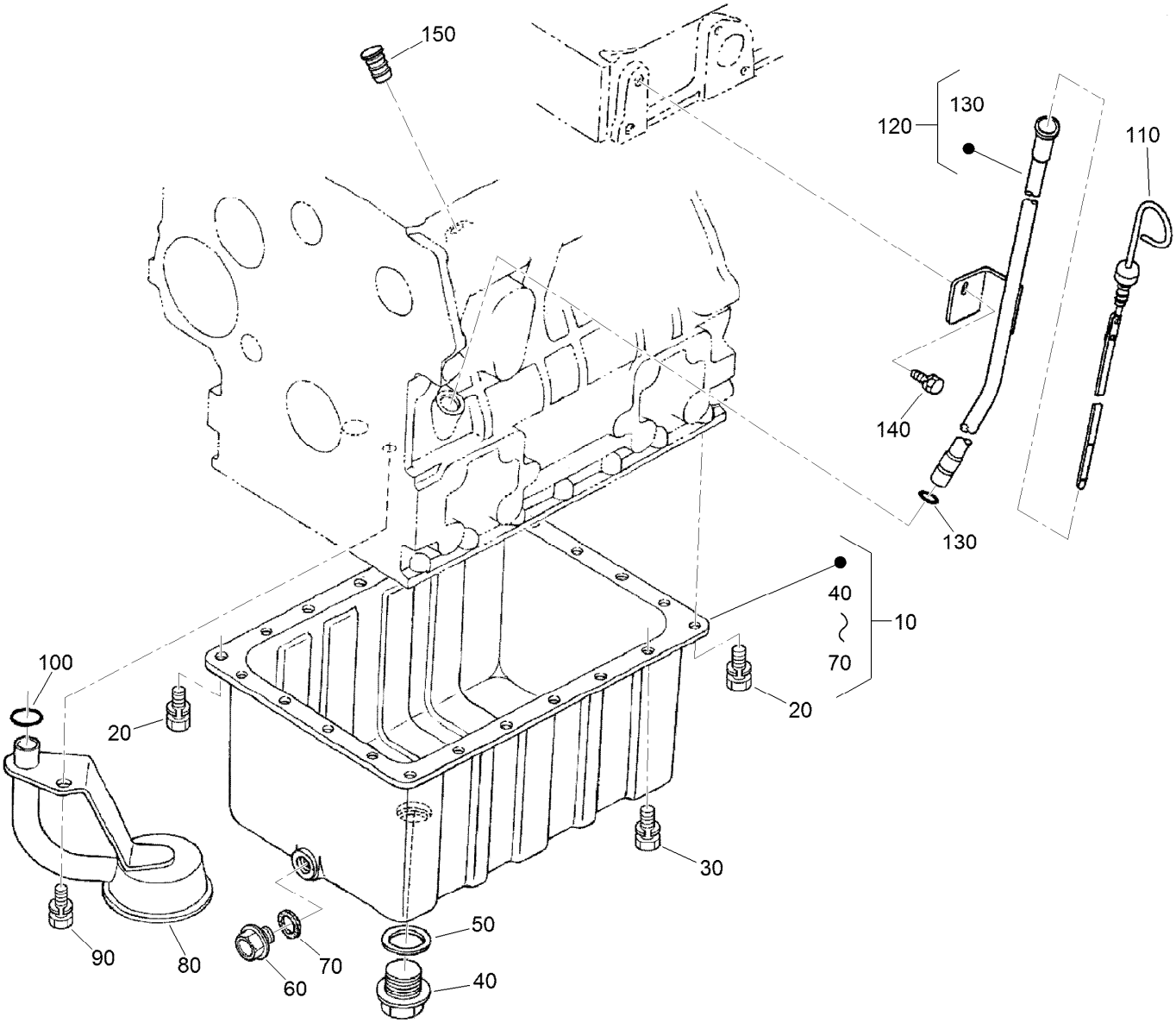

Oil Pan, Pump and Dipstick Assembly

Ref.	Part Number	Qty.	Description
10	130-1282	1	Oil Pan Kit
20	98-9351	2	Bolt
30	98-9351	22	Bolt
40	98-9686	1	Plug-Drain
50	110-9715	1	Gasket-Pan, Oil
60	114-8151	1	Plug-Drain
70	98-7524	1	Gasket
80	115-4116	1	Filter-Oil
90	98-7526	1	Bolt
100	105-3776	1	O-Ring
110	120-3124	1	Gauge-Oil
120	98-9672	1	Oil Gauge Guide ASM
130	98-9722	1	O-Ring
140	100-9195	1	Bolt
150	110-3720	1	Plug-Gauge, Oil

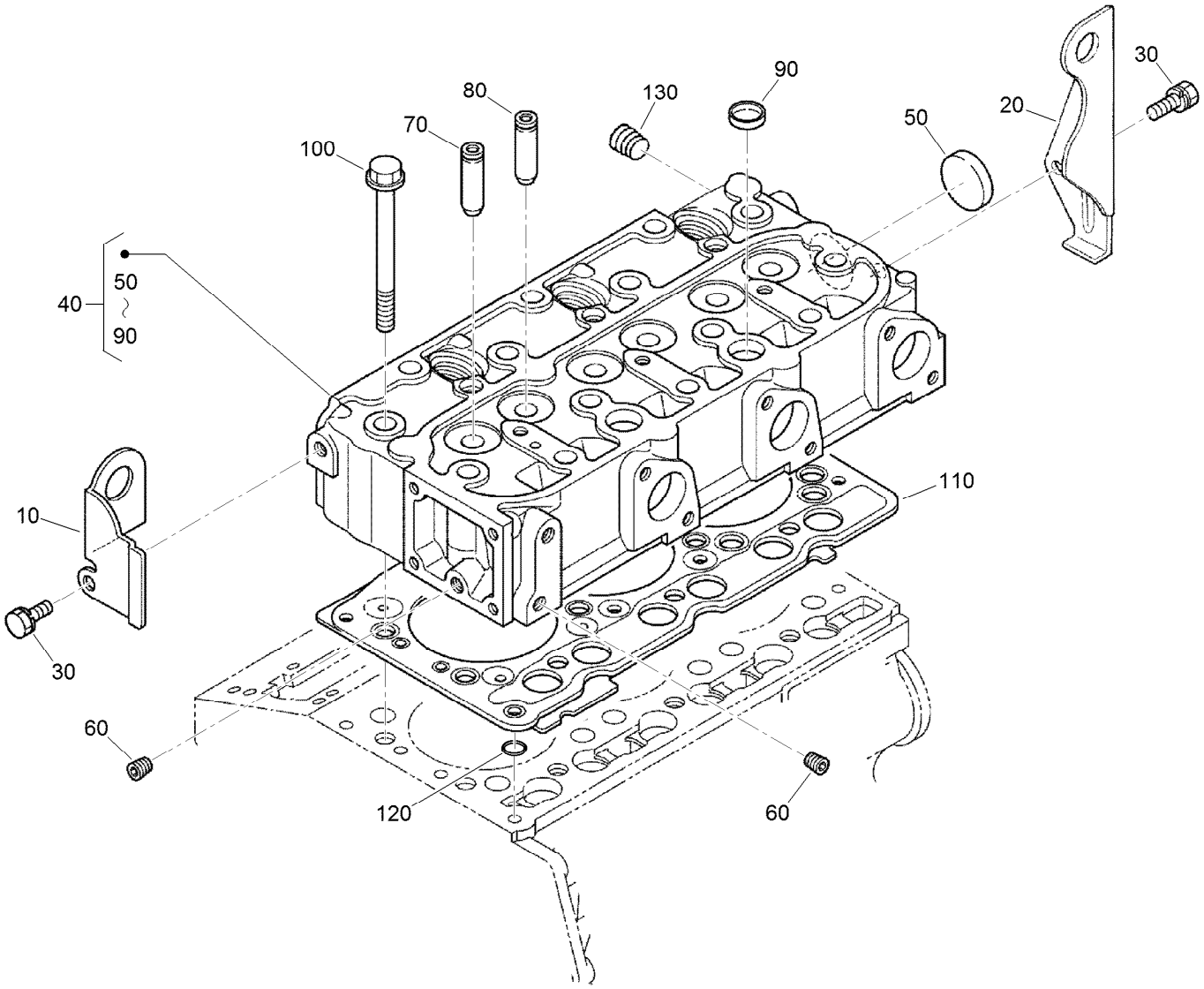

Cylinder Head Assembly

Ref.	Part Number	Qty.	Description
10	130-1231	1	Hook-Engine
20	98-9478	1	Hook-Engine
30	100-9195	2	Bolt
40	115-3445	1	Cylinder Head ASM
50	105-3705	1	Cap-Sealing
60	98-9687	2	Plug
70	107-9066	3	Guide-Valve, Inlet
80	107-9067	3	Guide-Valve, Exhaust
90	98-9389	2	Cap-Sealing
100	98-9479	14	Bolt-Head, Cylinder
110	98-9613	1	Gasket-Head, Cylinder
110	108-6573	1	Gasket-Head, Cylinder
120	98-7509	1	O-Ring
130	98-9444	1	Plug

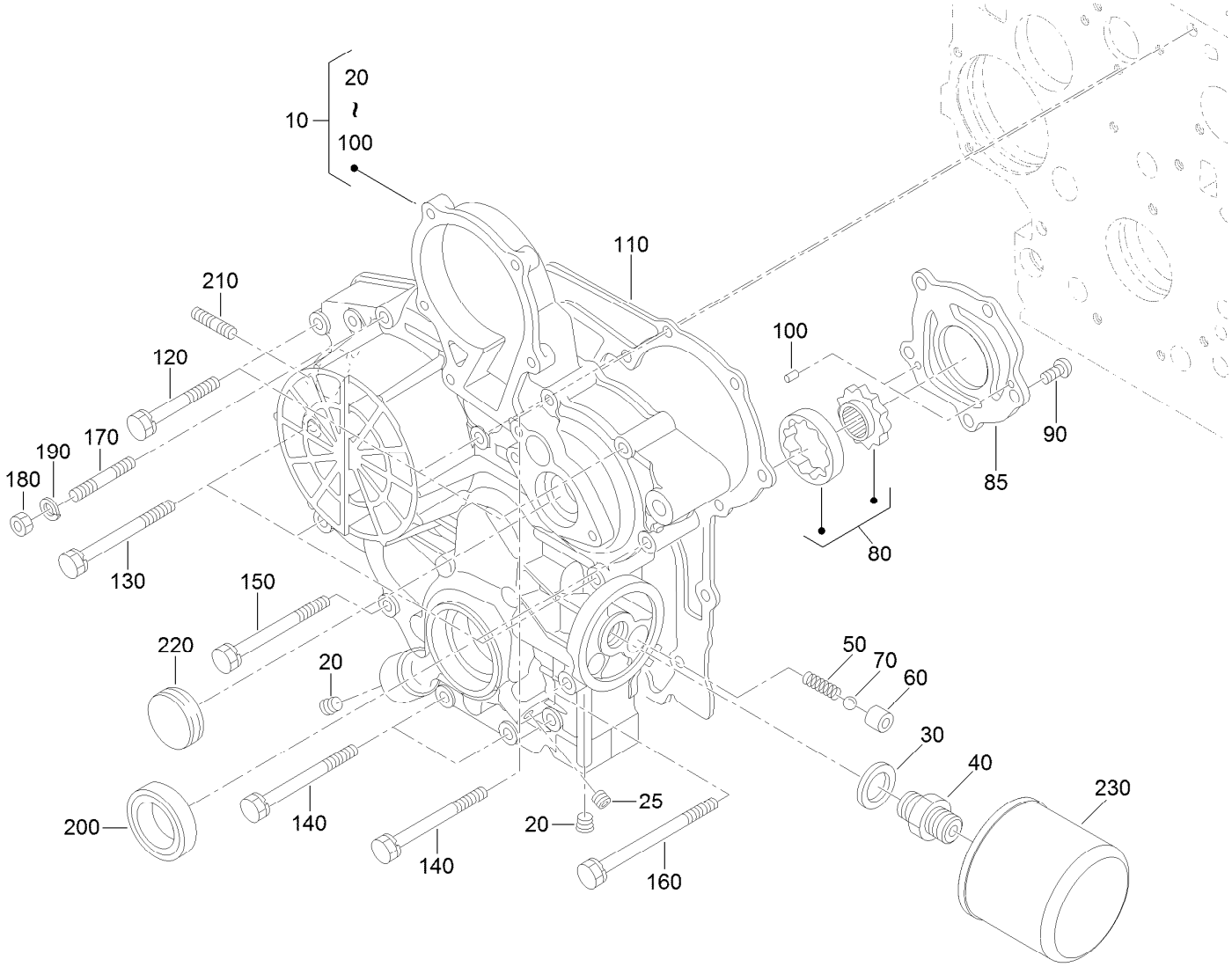

Gear Case and Oil Filter Cartridge Assembly

Ref.	Part Number	Qty.	Description
10	115-4105	1	Gear Case ASM
20	98-9598	2	Plug
25	98-7487	1	Plug
30	98-7562	1	Washer-Plain
40	98-9388	1	Joint-Pipe
50	98-9544	1	Spring
60	98-9543	1	Seat-Valve
70	98-9380	1	Ball
80	98-9540	1	Oil Pump Rotor ASM
85	107-9069	1	Cover-Pump, Oil
90	107-9071	5	Screw
100	107-9072	2	Pin-Straight
110	98-9633	1	Gasket-Case, Gear

Ref.	Part Number	Qty.	Description
120	100-1765	3	Bolt
130	125-9063	4	Bolt-Sems
140	98-9356	4	Bolt
150	107-9074	1	Bolt
160	98-9586	1	Bolt
170	105-3709	1	Stud
180	100-2203	1	Nut-Flange
190	98-7699	1	Washer-Spring
200	119-8038	1	Seal-Oil
210	105-3710	2	Stud
220	98-9641	1	Cover-Case, Gear
230	108-3841	1	Filter-Oil

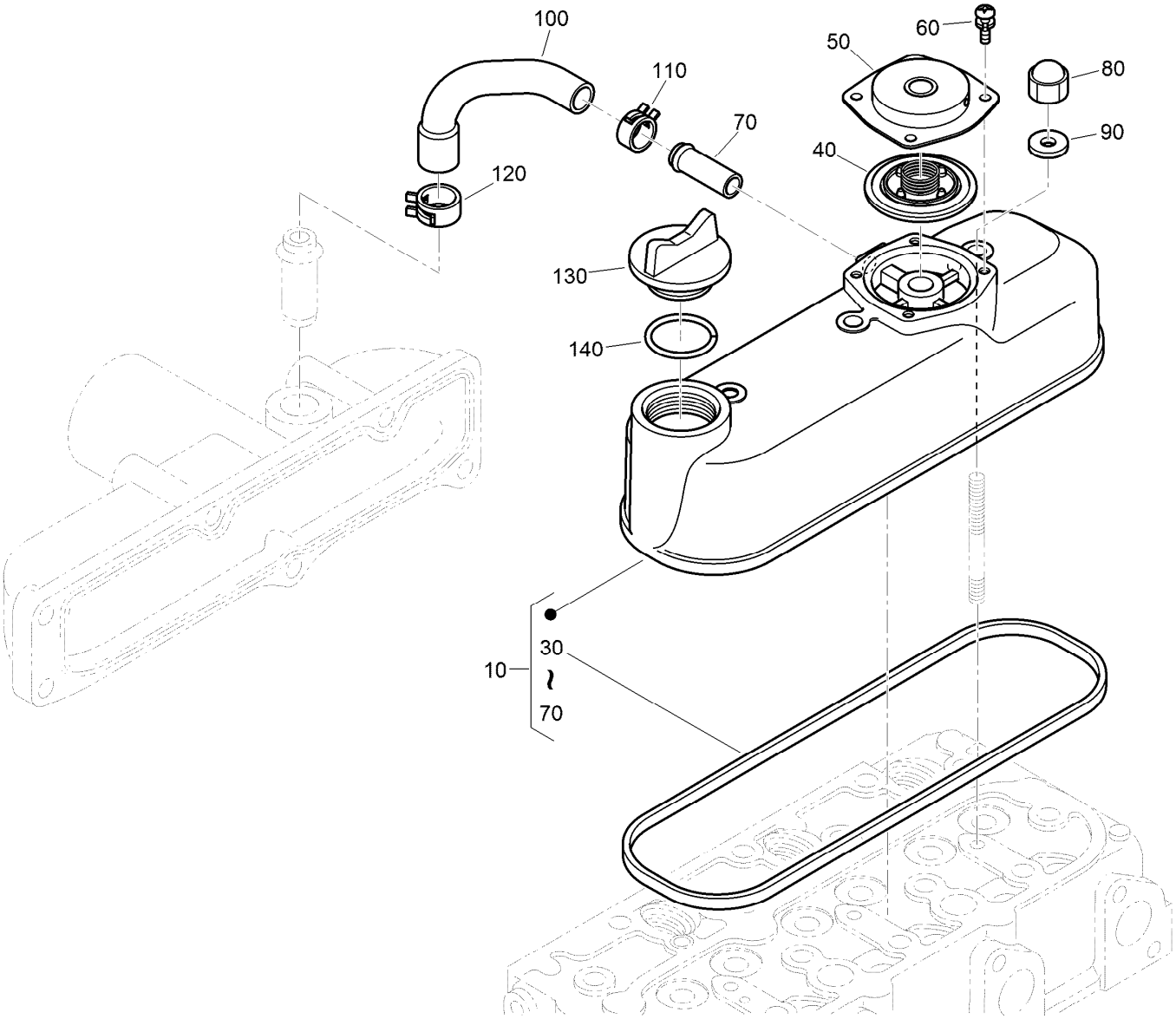

Cylinder Head Cover Assembly

Ref.	Part Number	Qty.	Description
10	130-1372	1	Cylinder Head Cover ASM
30	130-1249	1	Gasket-Head Cover
40	110-3715	1	Valve-Breather
50	110-3714	1	Cover-Breather
60	98-9364	4	Screw (With Washer)
70	98-7766	1	Pipe-Return, Water
80	98-9455	3	Nut-Cap
90	98-9454	3	Gasket
100	108-2858	1	Tube-Breather
110	108-2859	1	Clamp-Hose
120	108-2860	1	Clamp-Hose
130	107-9075	1	Plug-Filler, Oil
140	99-3446	1	O-Ring

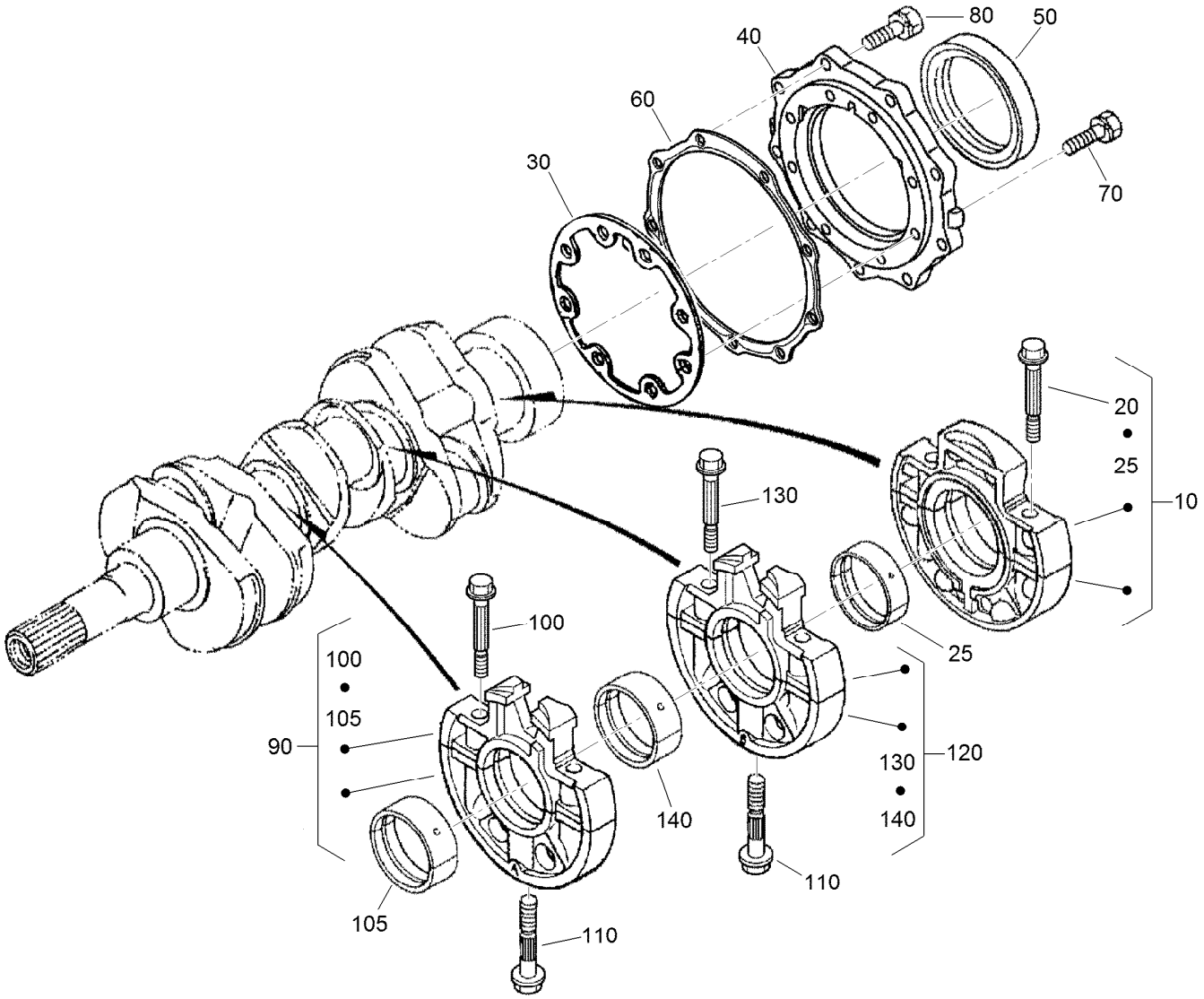

Main Bearing Case Assembly

Ref.	Part Number	Qty.	Description
10	112-7026	1	Wheel Bearing Case ASM
20	98-9484	2	Bolt-Case, Bearing
25	115-4121	1	Metal-Crankshaft (STD)
25	112-7039	1	Metal-Crankshaft (0.2Mm)
25	112-7040	1	Metal-Crankshaft (-0.4Mm)
30	127-0440	1	Gasket-Case, Bearing
40	112-7046	1	Cover-Case, Bearing
50	112-0180	1	Seal-Oil
60	98-9635	1	Gasket-Cover, Bearing Case
70	127-0441	8	Bolt
80	127-0442	9	Bolt

Ref.	Part Number	Qty.	Description
90	115-4106	1	Main Bearing Case ASM
100	98-9484	2	Bolt-Case, Bearing
105	98-9524	1	Metal-Crankshaft (STD Set)
105	127-0433	1	Metal-Crankshaft (-0.2Mm)
105	98-9531	1	Bearing-Main (0.4Mm)
110	98-9485	2	Bolt-Case, Bearing
120	115-4107	1	Main Bearing Case ASM
130	98-9484	2	Bolt-Case, Bearing
140	98-9524	1	Metal-Crankshaft (STD Set)
140	127-0433	1	Metal-Crankshaft (-0.2Mm)
140	98-9531	1	Bearing-Main (0.4Mm)

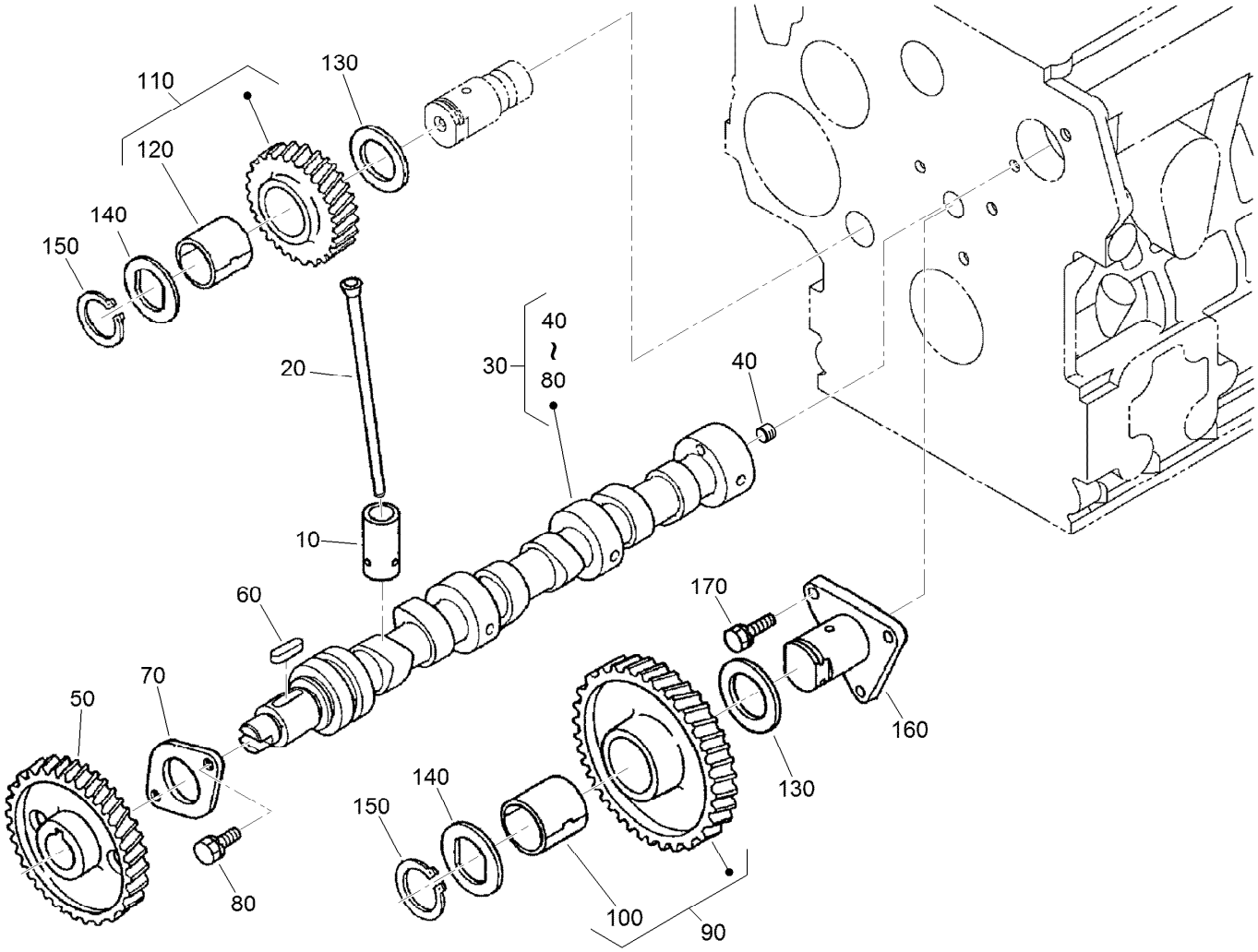

Camshaft and Idle Gear Shaft Assembly

Ref.	Part Number	Qty.	Description
10	112-0185	6	Tappet
20	127-0421	6	Rod-Push
30	130-1250	1	Camshaft ASM
40	110-3729	1	Ball
50	98-9512	1	Gear-Cam
60	98-9378	1	Key-Feather
70	98-9510	1	Stopper-Camshaft
80	98-7692	2	Bolt
90	117-7584	1	Idler Gear ASM

Ref.	Part Number	Qty.	Description
100	117-7585	1	Bushing-Gear, Idle
110	130-1259	1	Idler Gear ASM
120	117-7585	1	Bushing-Gear, Idle
130	98-9535	2	Collar-Gear, Idle
140	98-9536	2	Collar-Gear, Idle
150	98-9534	2	Circlip-Gear, Idle
160	98-9533	1	Shaft-Gear, Idle
170	98-7692	3	Bolt

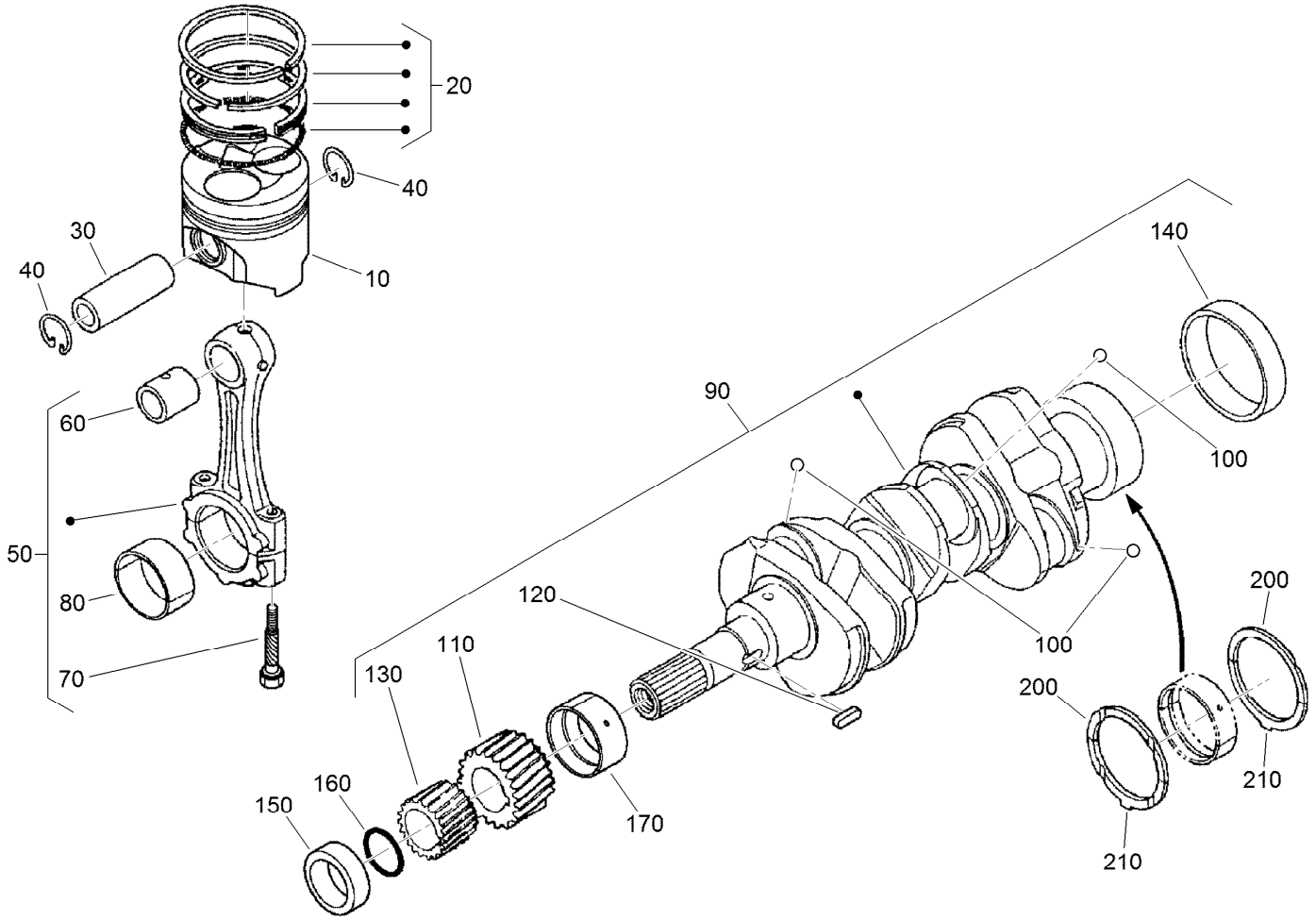

Piston and Crankshaft Assembly

Ref.	Part Number	Qty.	Description
10	112-8404	3	Piston (STD)
10	112-8414	3	Piston (+0.5Mm)
20	98-9618	3	Piston Ring ASM (STD)
20	98-9619	3	Piston Ring ASM (0.5Mm)
30	98-9513	3	Pin-Piston
40	98-9514	6	Circlip-Pin, Piston
50	117-7586	3	Connecting Rod ASM
60	115-3014	3	Bushing-Pin, Piston
70	98-9517	6	Bolt-Rod, Connecting
80	98-9553	3	Bearing-Rod (STD)
80	117-7587	3	Metal-Crankpin (-0.2Mm)
80	117-7588	3	Metal-Crankpin (-0.4Mm)
90	98-9642	1	Crankshaft ASM
100	110-3729	3	Ball
110	117-7561	1	Gear-Crankshaft

Ref.	Part Number	Qty.	Description
120	98-9666	1	Key
130	127-0445	1	Gear-Drive, Oil Pump
140	98-9522	1	Sleeve-Crankshaft
150	127-0444	1	Collar-Crankshaft
160	105-3783	1	O-Ring
170	112-7005	1	Bearing-Main (STD)
170	98-9528	1	Bearing-Main (-0.2Mm)
170	130-1274	1	Metal-Crankshaft (-0.40Mm)
200	98-9413	2	Bearing-Thrust (STD)
200	127-0416	2	Metal-Side (+0.2Mm)
200	127-0417	2	Metal-Side (+0.40Mm)
210	98-9688	2	Bearing-Thrust (STD)
210	127-0437	2	Metal-Side (+0.2Mm)
210	127-0438	2	Metal-Side (+0.40Mm)

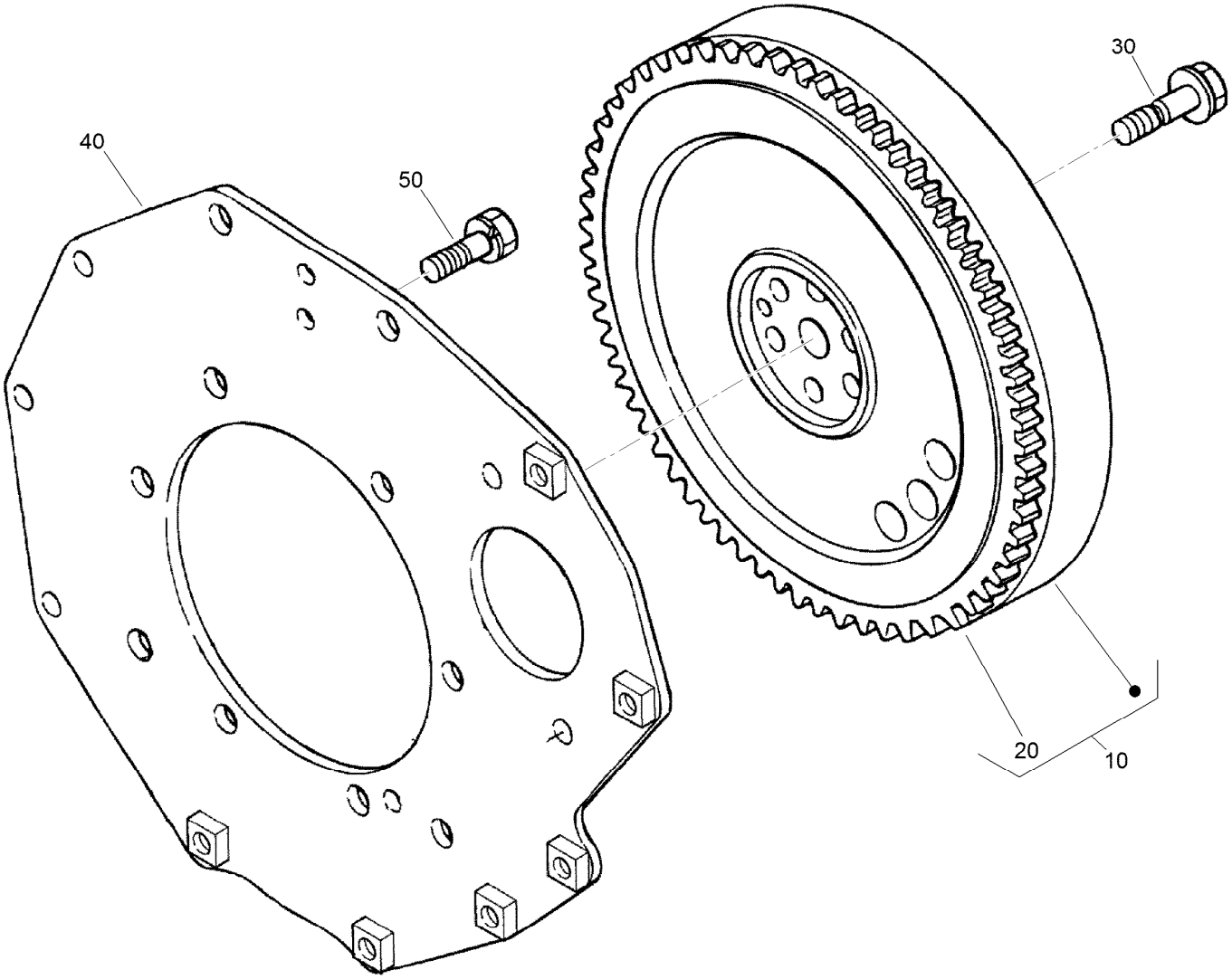

Flywheel Assembly

Ref.	Part Number	Qty.	Description
10	105-3784	1	Flywheel ASM
20	115-3015	1	Gear-Ring
30	98-9537	6	Bolt-Flywheel
40	98-9486	1	Plate-End, Rear
50	98-9392	8	Bolt

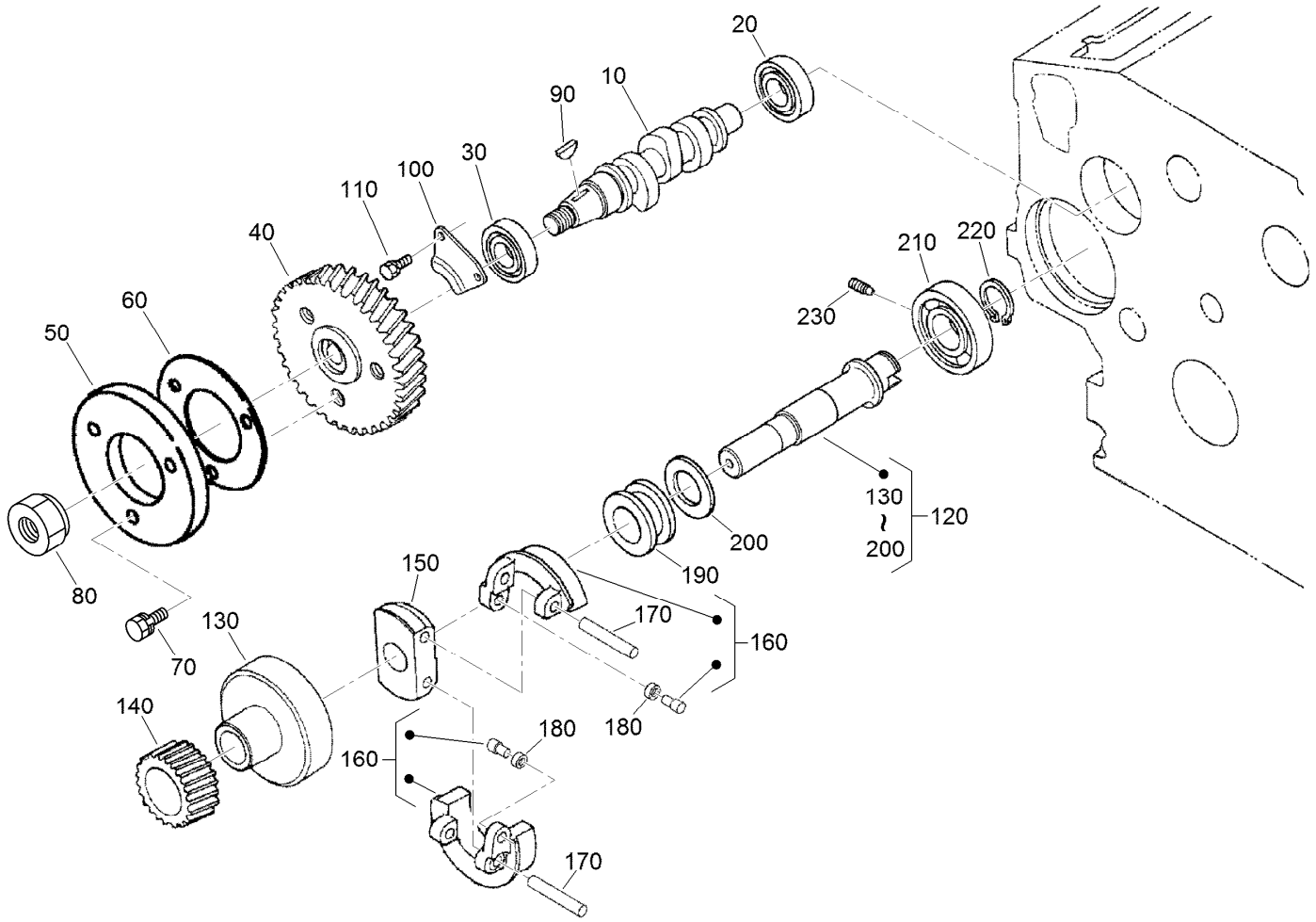

Fuel Camshaft and Governor Shaft Assembly

Ref.	Part Number	Qty.	Description
10	98-9459	1	Camshaft-Fuel
20	107-9077	1	Bearing-Ball
30	107-9078	1	Bearing-Ball
40	98-9669	1	Gear-Pump, Injection
50	130-1239	1	Cam-Fuel
60	98-9548	1	Washer
70	98-9350	3	Bolt
80	130-1512	1	Nut
90	98-9595	1	Key-Woodruff
100	98-9511	1	Stopper-Fuel, Camshaft
110	98-7692	2	Bolt
120	130-1252	1	Governor Shaft ASM

Ref.	Part Number	Qty.	Description
130	98-9562	1	Holder-Gear, Governor
140	130-1264	1	Gear-Governor
150	98-9561	1	Holder-Weight, Governor
160	130-1263	2	Governor Weight ASM
170	98-9560	2	Shaft-Weight, Governor
180	98-9692	2	Roller
190	98-9563	1	Sleeve-Governor
200	98-9564	1	Washer-Thrust
210	107-9079	1	Bearing-Ball
220	98-9657	1	Circlip-Shaft, Governor
230	98-9565	1	Screw-Set

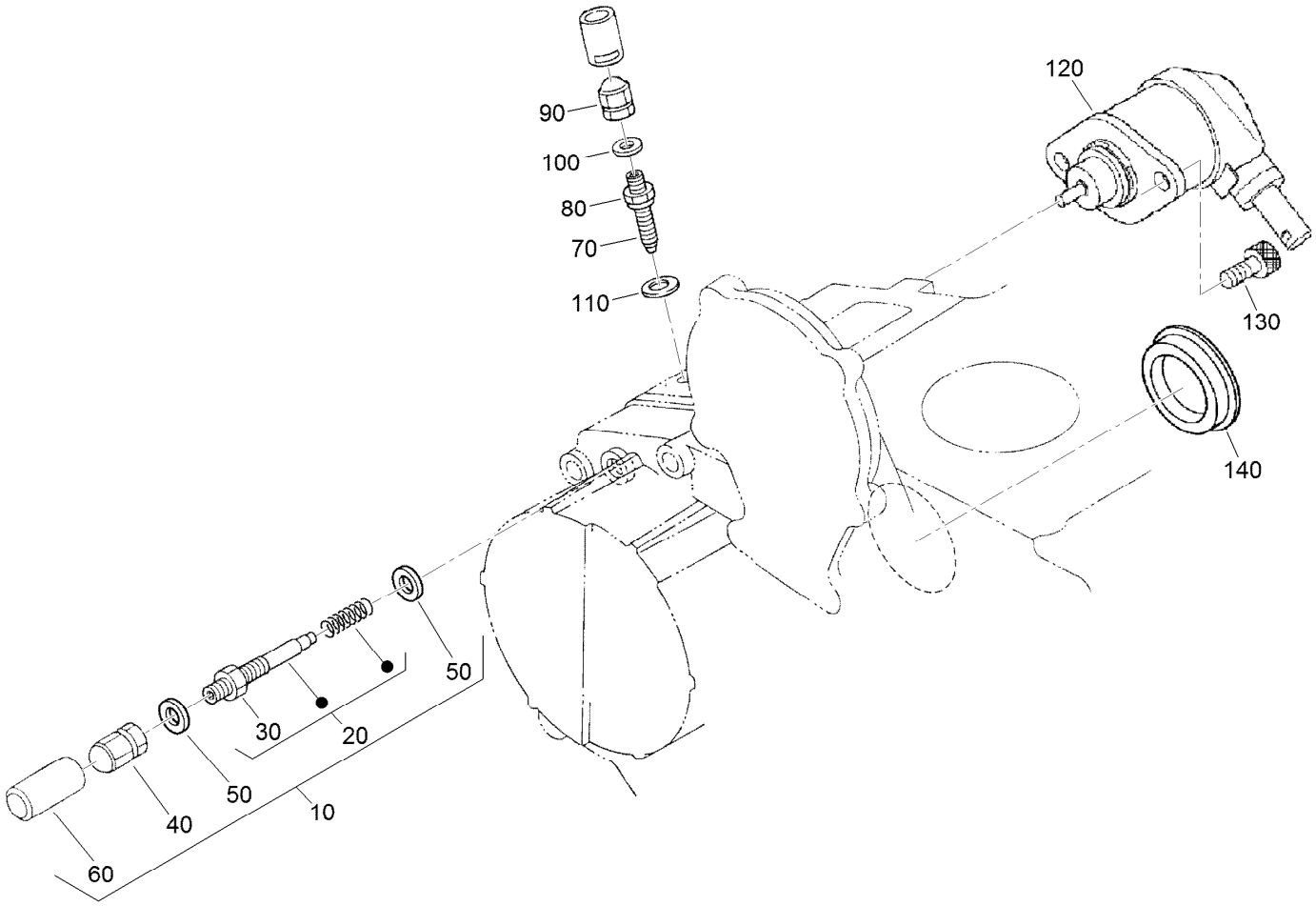

Idle Apparatus and Stop Solenoid Assembly

Ref.	*Part Number*	*Qty.*	*Description*
10	98-9678	1	Idle Apparatus ASM
20	112-7014	1	Adjusting Bolt ASM
30	98-9439	1	Nut
40	112-0181	1	Nut
50	98-7654	2	Gasket
60	98-7656	1	Cap
70	112-7015	1	Bolt-Adjusting
80	100-2175	1	Nut-Lock
90	112-0181	1	Nut
100	98-7654	1	Gasket
110	107-9081	1	Gasket
120	104-5155	1	Solenoid-Stop
130	130-1155	2	Screw-HSH
140	112-7016	1	Cover-Pump

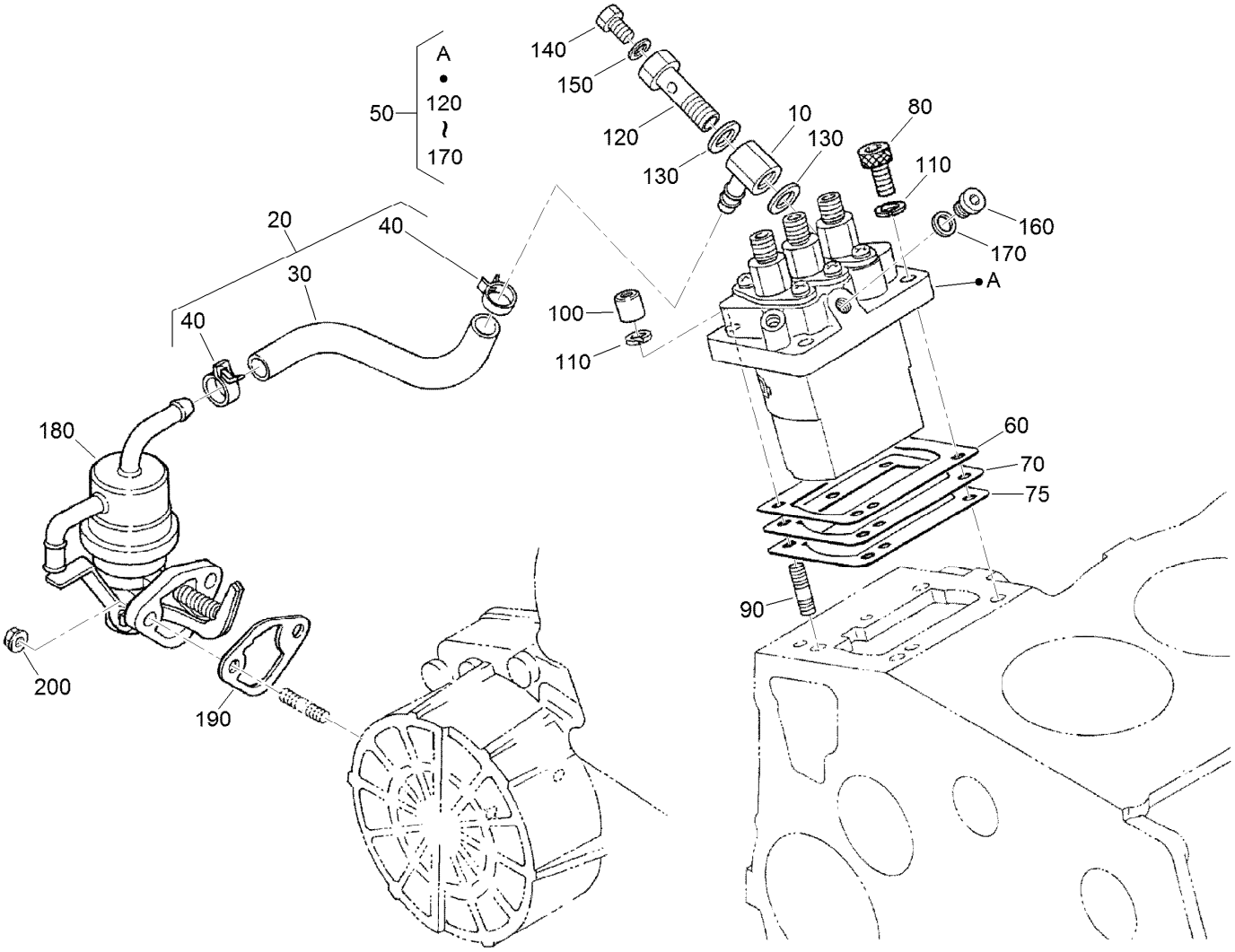

Injection Pump and Fuel Pump Assembly

Ref.	Part Number	Qty.	Description
10	98-9596	1	Joint-Eye
20	98-9467	1	Fuel Pipe ASM
30	98-9384	1	Tube-Fuel
40	100-2217	2	Clip-Pipe
50	98-9643	1	Injection Pump ASM
60	115-3045	1	Shim-Injection (0.175Mm)
70	98-9456	1	Shim-Injection (0.20Mm)
70	98-9457	1	Shim-Injection (0.25Mm)
75	115-3046	1	Shim-Injection (0.35Mm)
75	98-9458	1	Shim-Injection (0.30Mm)
80	117-7564	2	Bolt-Hex Soc HD
90	98-9438	2	Stud

Ref.	Part Number	Qty.	Description
100	98-9440	2	Nut-Cap
110	98-7699	4	Washer-Spring
120	98-9464	1	Bolt-Joint
130	98-9445	2	Gasket
140	98-9430	1	Screw
150	98-9446	1	Gasket
160	98-9466	1	Plug
170	98-9451	1	Gasket
180	98-9677	1	Fuel Pump ASM
190	117-7562	1	Gasket-Pump, Fuel
200	100-2203	2	Nut-Flange

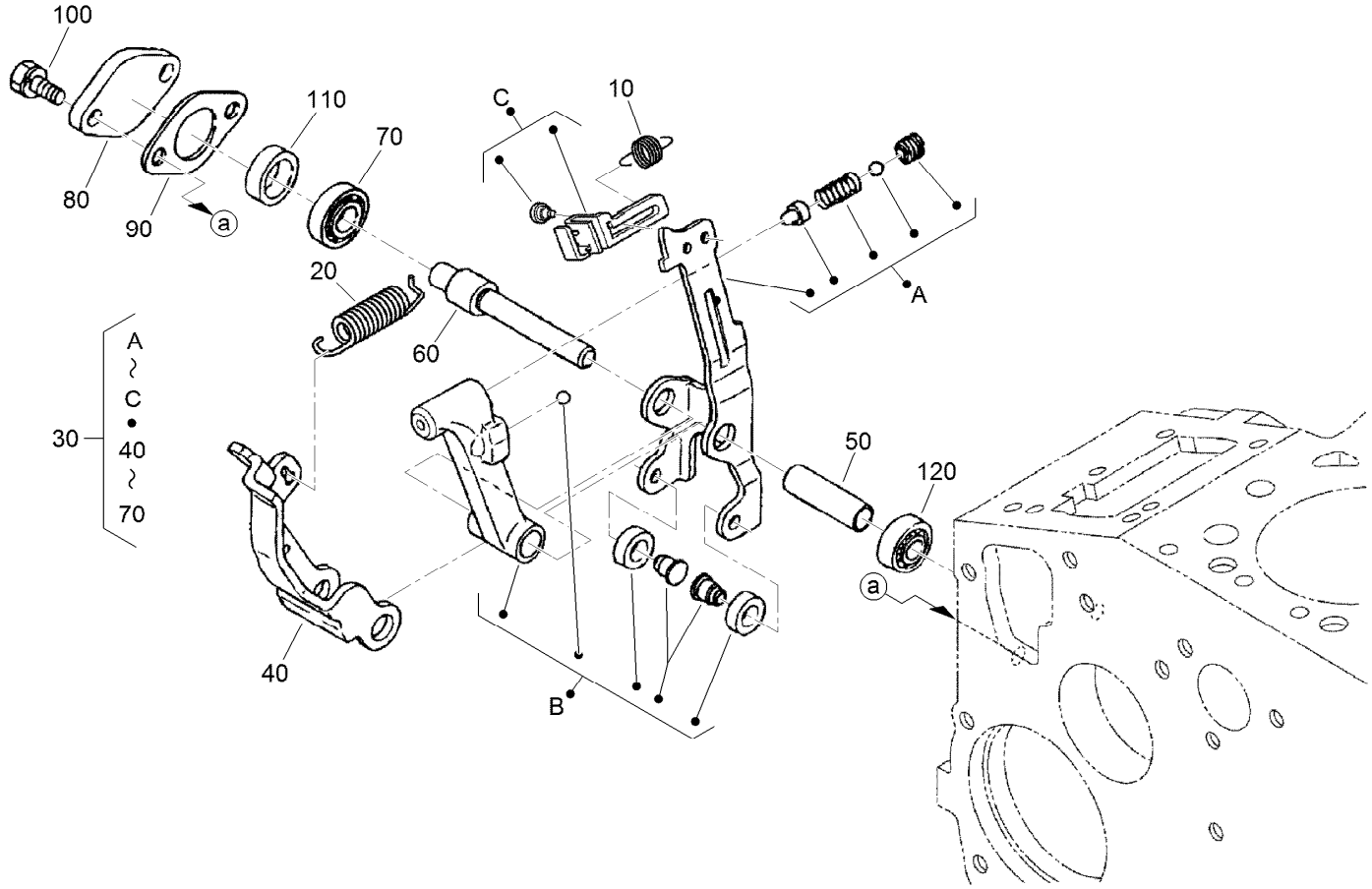

Governor Assembly

Ref.	Part Number	Qty.	Description
10	105-3786	1	Spring-Start
20	98-9681	1	Spring-Governor
30	112-7015	1	Bolt-Adjusting
40	107-9084	1	Lever-Fork
50	107-9085	1	Shaft-Lever, Fork
60	107-9086	1	Shaft-Lever, Fork
70	98-9570	1	Bearing-Miniaturize
80	115-4122	1	Cover-Shaft, Fork Lever
90	98-9682	1	Gasket
100	98-9351	2	Bolt
110	98-9567	1	Collar
120	98-9571	1	Bearing-Miniaturize

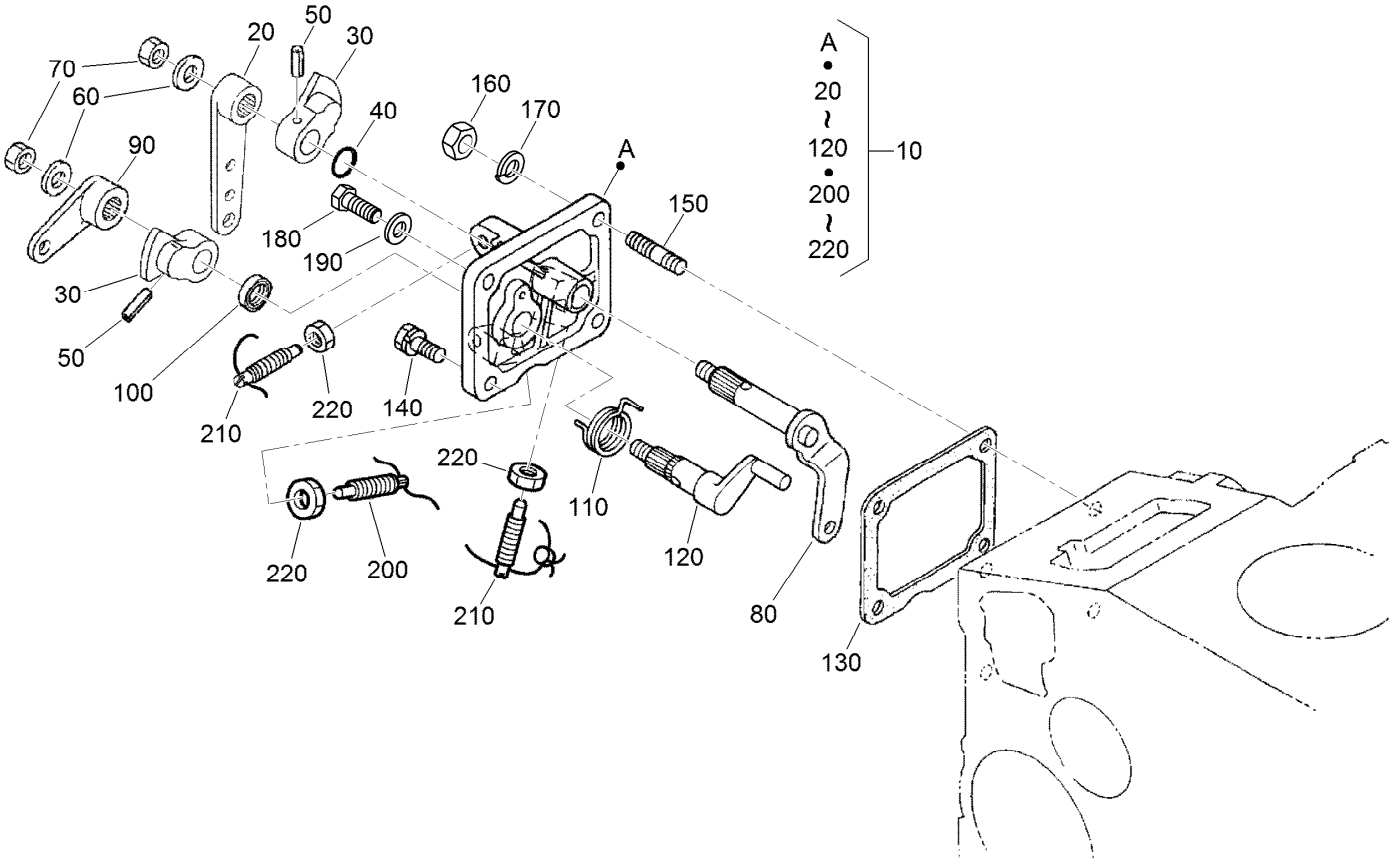

Speed Control Plate Assembly

Ref.	Part Number	Qty.	Description
10	98-9661	1	Control Plate ASM
20	98-9662	1	Lever-Control, Speed
30	98-9572	2	Lever-Control, Speed
40	105-3788	1	O-Ring
50	98-7602	2	Pin-Spring
60	98-9594	2	Washer-Plain
70	98-9589	2	Nut
80	98-9658	1	Governor Lever ASM
90	98-9663	1	Lever-Stop, Engine
100	98-7601	1	Seal-Oil
110	98-9472	1	Spring-Return

Ref.	Part Number	Qty.	Description
120	98-9664	1	Shaft-Lever, Stop
130	98-9637	1	Gasket
140	98-7692	1	Bolt
150	105-3710	2	Stud
160	100-2203	2	Nut-Flange
170	98-7699	2	Washer-Spring
180	127-0401	1	Bolt-Hex
190	98-7654	1	Gasket
200	117-7566	1	Bolt-Adjusting
210	117-7565	2	Bolt-Adjusting
220	98-7572	3	Nut

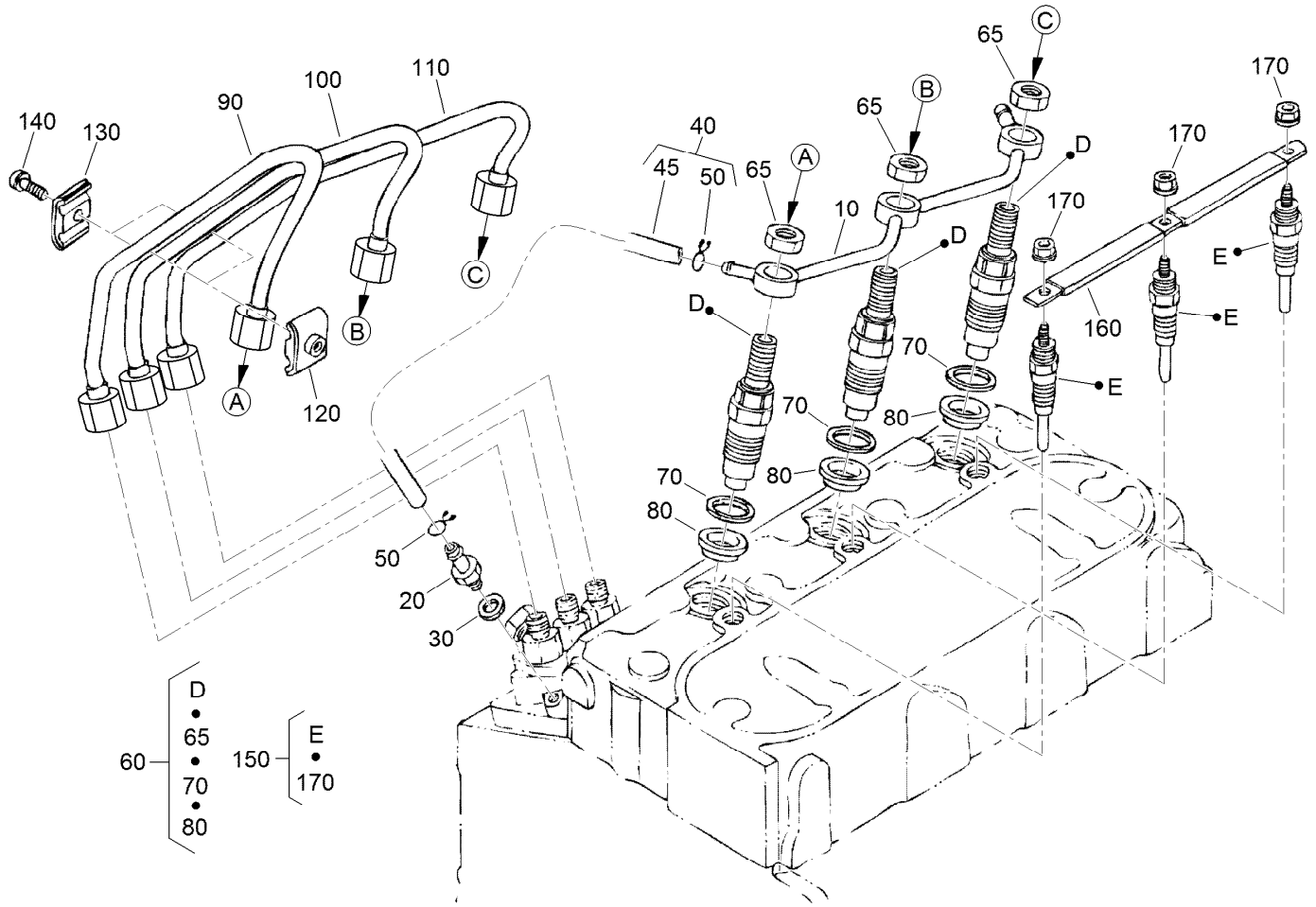

Nozzle Holder and Glow Plug Assembly

Ref.	Part Number	Qty.	Description
10	98-9620	1	Overflow Pipe ASM
20	98-9431	1	Screw-Bleeder, Air
30	98-7654	1	Gasket
40	98-9420	1	Overflow Pipe ASM
45	112-0182	1	Pipe-Overflow
50	98-7671	2	Clip-Pipe
60	108-2866	3	Nozzle Holder Kit
65	121-2411	3	Nut
70	98-7676	3	Gasket
80	98-7677	3	Seal-Heat

Ref.	Part Number	Qty.	Description
90	98-9653	1	Pipe-Injection
100	98-9654	1	Pipe-Injection
110	98-9655	1	Pipe-Injection
120	98-7682	2	Clamp-Pipe
130	98-7683	2	Clamp-Pipe
140	98-7684	2	Screw (W/Washer)
150	115-3019	3	Plug-Glow
160	98-9631	1	Cord-Plug, Glow
170	99-8377	3	Nut-Flange

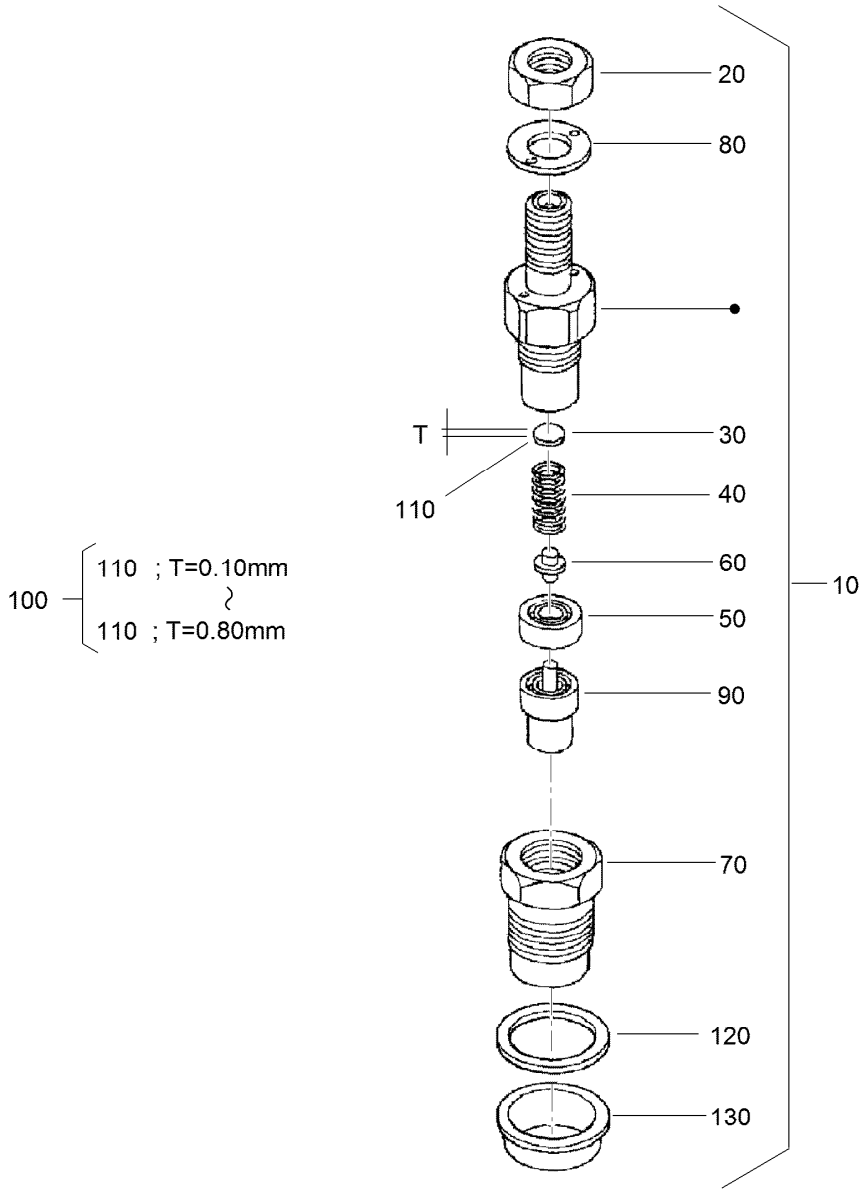

Nozzle Holder Assembly

Ref.	Part Number	Qty.	Description
10	108-2866	3	Nozzle Holder Kit
20	99-8301	3	Nut
30	99-8302	3	Washer-Adjusting
40	99-8303	3	Spring-Nozzle
50	99-8304	3	Spacer-Distance
60	99-8305	3	Rod-Push
70	99-8306	3	Nut-Nozzle
80	99-8307	3	Washer-Plain
90	107-7826	3	Piece-Nozzle
100	99-8309	3	Adjusting Washer ASM
110	99-8310	3	Washer-Adjust (0.10Mm)

Ref.	Part Number	Qty.	Description
110	99-8311	3	Washer-Adjust (0.20Mm)
110	99-8312	3	Washer-Adjust (0.30Mm)
110	99-8313	3	Washer-Adjust (0.40Mm)
110	99-8314	3	Washer-Adjust (0.50Mm)
110	99-8315	3	Washer-Adjust (0.52Mm)
110	99-8316	3	Washer-Adjust (0.54Mm)
110	99-8317	3	Washer-Adjust (0.56Mm)
110	99-8318	3	Washer-Adjust (0.58Mm)
110	99-8319	3	Washer-Adjust (0.80Mm)
120	98-7676	3	Gasket
130	98-7677	3	Seal-Heat

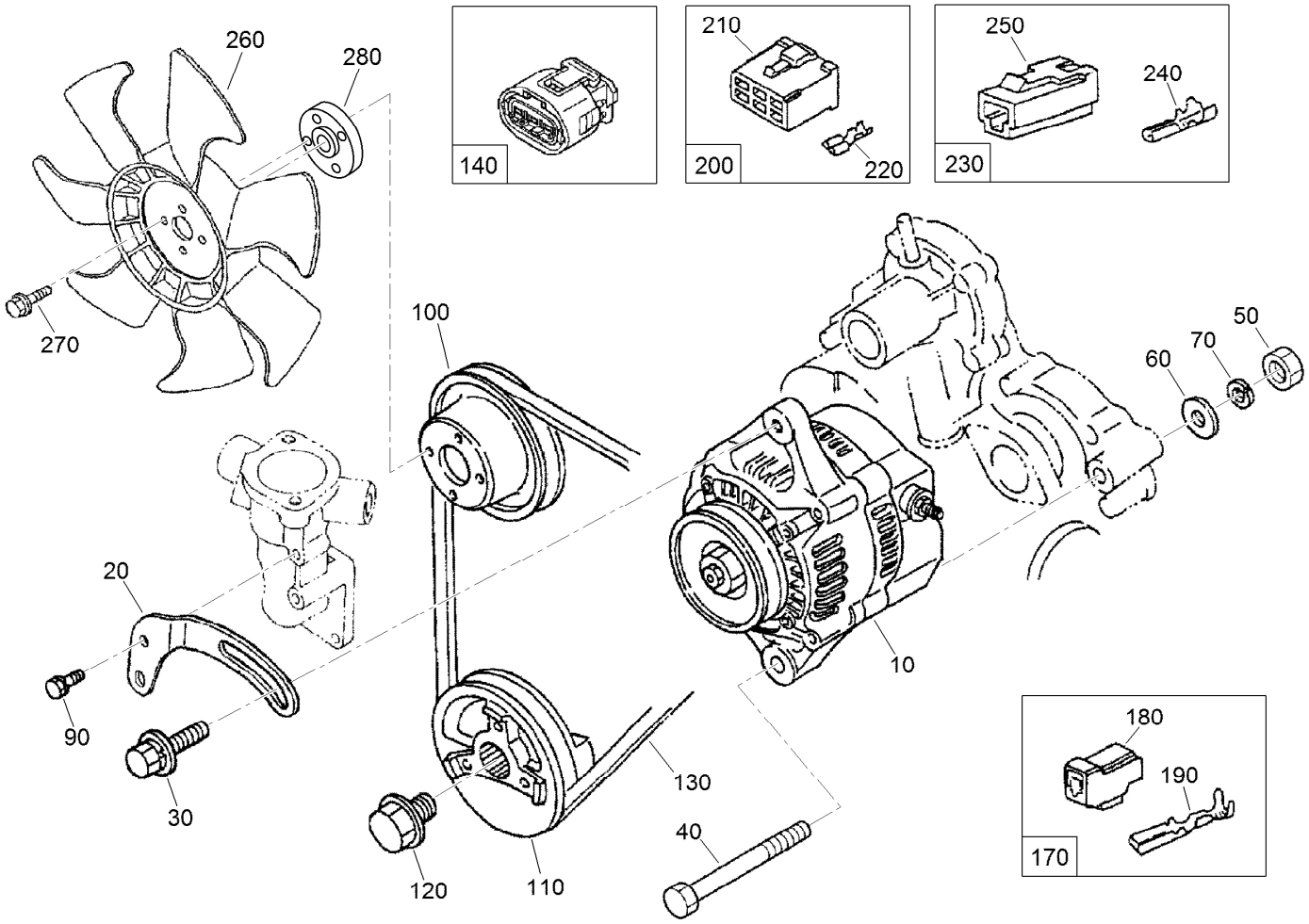

Alternator and Pulley Assembly

Ref.	Part Number	Qty.	Description
10	121-3811	1	Alternator ASM
20	112-7047	1	Stay-Dynamo
30	108-7088	1	Bolt
40	98-9360	1	Bolt
50	98-7737	1	Nut
60	98-9366	1	Washer-Plain
70	98-7738	1	Washer-Spring
90	98-7692	1	Bolt
100	98-9584	1	Pulley-Fan
110	98-9473	1	Pulley-Drive, Fan
120	98-9585	1	Bolt
130	98-9676	1	V-Belt
140	130-1291	1	Connector ASM

Ref.	Part Number	Qty.	Description
170	115-8600	1	Coupler ASM
180	115-8601	1	Connector
190	115-8602	2	Terminal
200	130-1290	1	Connector Coupler ASM
210	98-9697	1	Connector
220	98-9699	2	Terminal
230	130-1328	1	Terminal
240	130-1175	1	Connector
250	130-1176	1	Terminal
260	130-4597	1	Fan-Cooling
270	99-8363	4	Bolt-Flange
280	130-4598	1	Collar-Fan

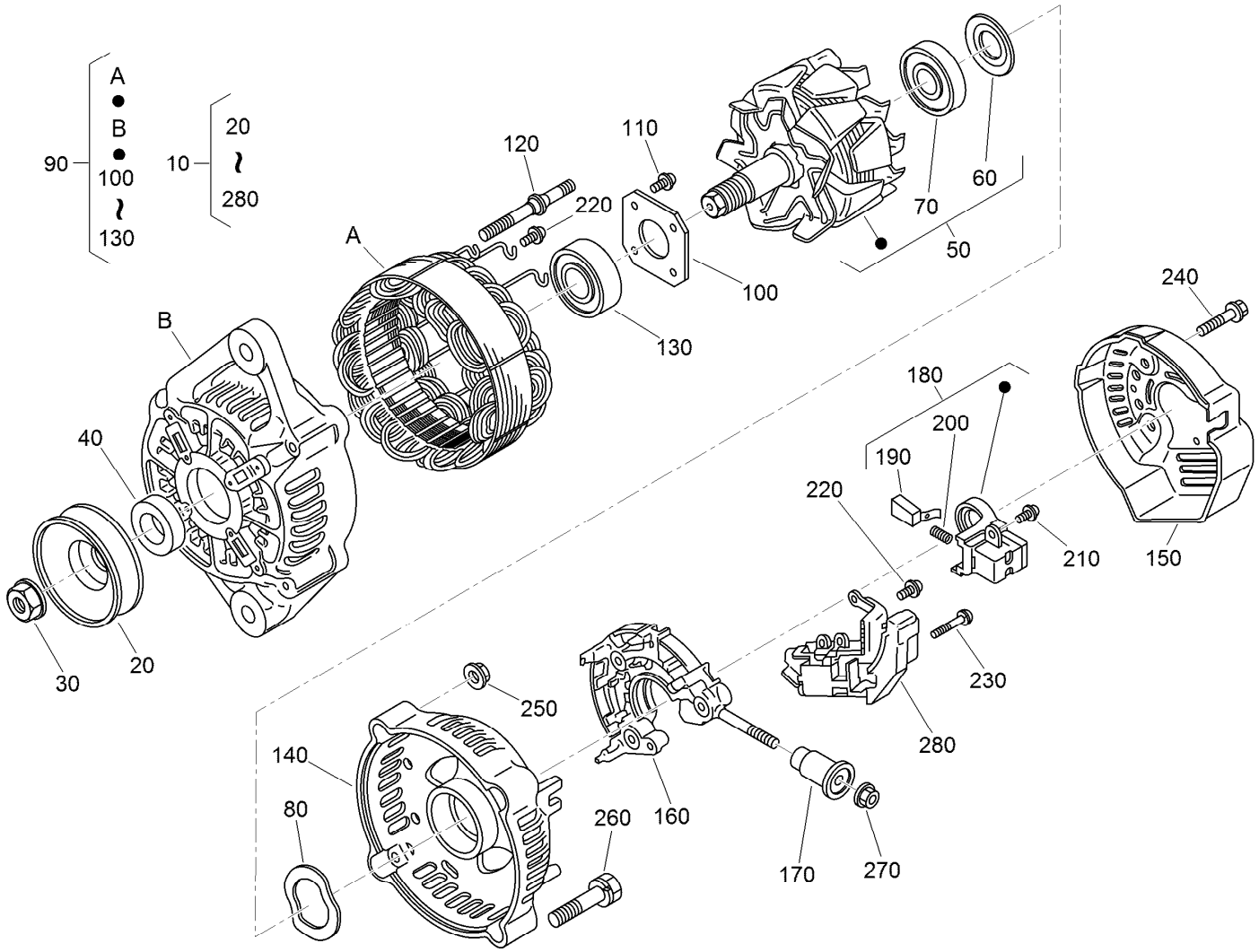

Alternator Components Assembly

Ref.	Part Number	Qty.	Description
10	121-3811	1	Alternator ASM
20	98-9453	1	Pulley-Dynamo
30	98-7708	1	Nut
40	98-7709	1	Collar
50	107-0136	1	Rotor ASM
60	98-7711	1	Cover-Bearing
70	107-0138	1	Bearing-Ball
80	98-7713	1	Washer-Thrust
90	107-0139	1	Drive End Frame ASM
100	98-7715	1	Plate-Retainer
110	98-7716	4	Screw-Head, Round
120	98-7717	2	Bolt-Through
130	107-0137	1	Bearing-Ball
140	121-3812	1	Frame-End

Ref.	Part Number	Qty.	Description
150	121-3813	1	Cover-End
160	121-3805	1	Rectifier ASM
170	117-0321	1	Insulation-Brush
180	107-0141	1	Brush Holder ASM
190	98-7724	2	Brush
200	98-7725	2	Spring-Brush
210	98-7726	2	Screw-Head, Round
220	98-7727	6	Screw-Head, Round
230	98-7728	1	Screw-Head, Round
240	98-7729	3	Bolt
250	98-7730	2	Nut
260	98-7731	2	Bolt
270	98-7732	1	Nut
280	121-3809	1	Regulator ASM

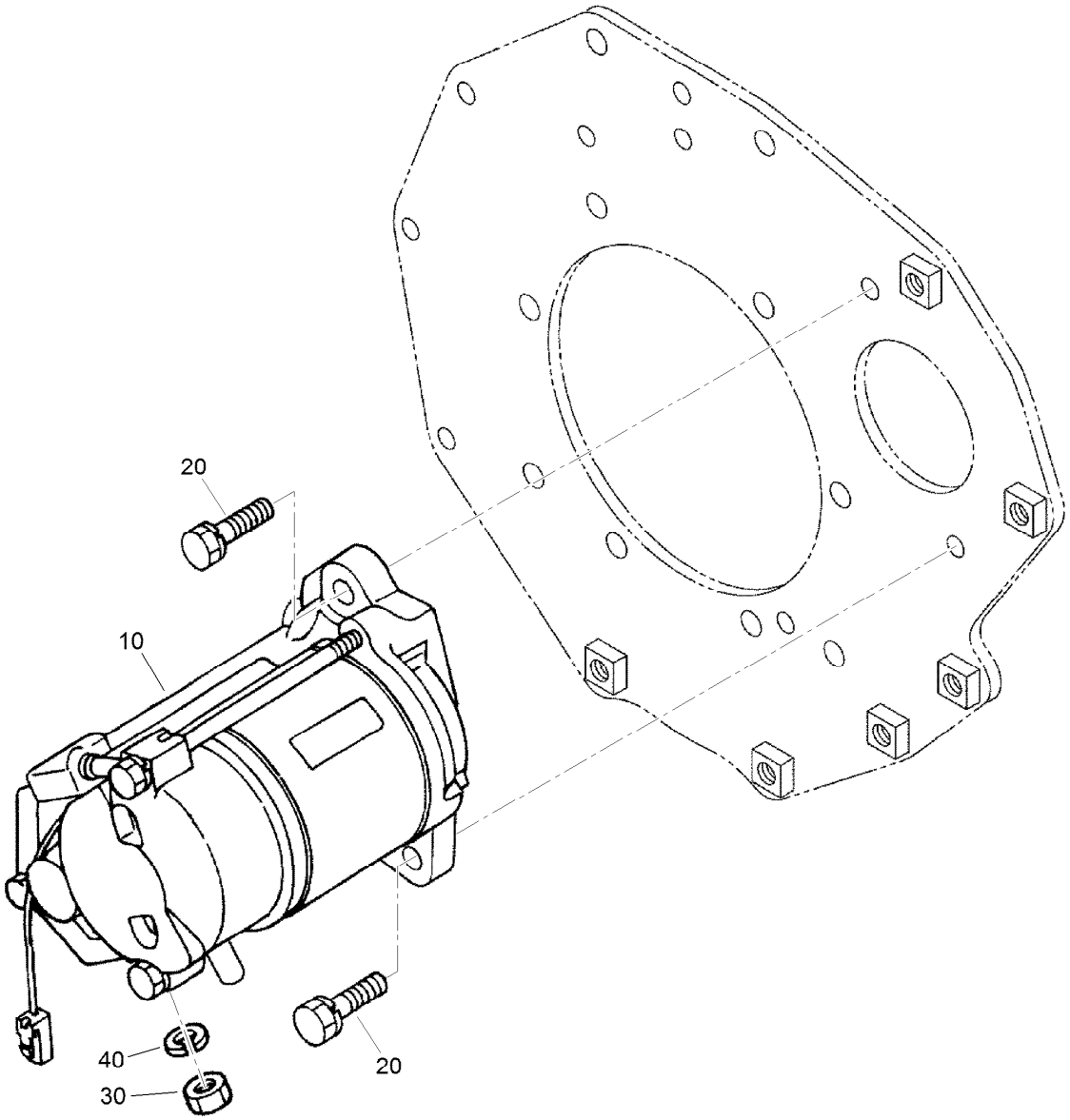

Starter Assembly

Ref.	Part Number	Qty.	Description
10	98-9705	1	Starter ASM
20	98-7697	2	Bolt
30	98-7739	1	Nut
40	105-2893	1	Washer-Spring

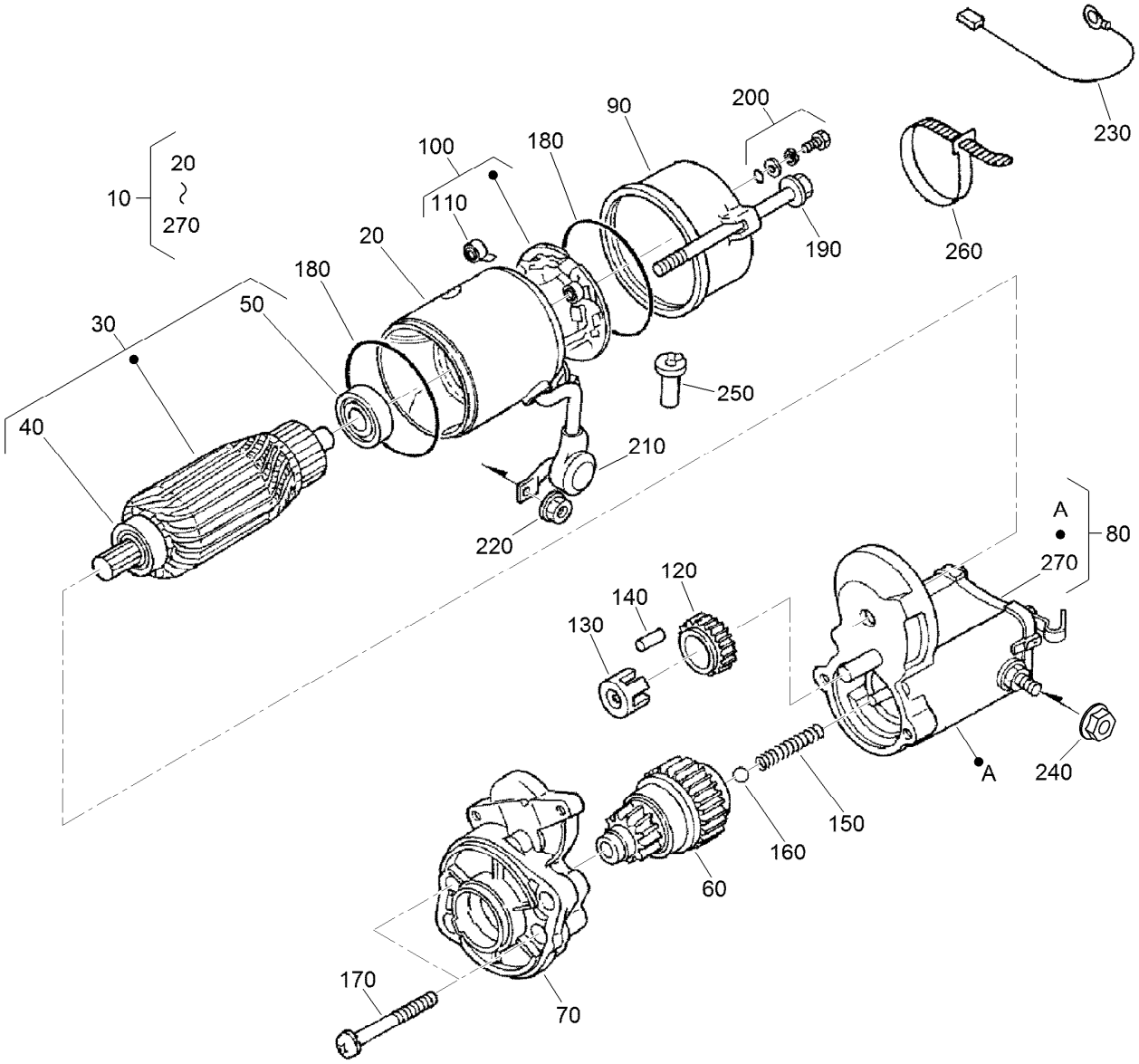

Starter Component Assembly

Ref.	Part Number	Qty.	Description
10	98-9705	1	Starter ASM
20	104-8608	1	Yoke ASM
30	98-7742	1	Armature ASM
40	98-7744	1	Bearing
50	98-7743	1	Bearing
60	99-8373	1	Clutch-Running, Over
70	99-8374	1	Frame-End, Drive
80	105-3746	1	Magnetic Switch ASM
90	98-7748	1	Frame-End
100	98-7749	4	Brush Holder ASM
110	98-7750	1	Spring-Brush
120	98-7751	1	Gear
130	98-7752	5	Retainer
140	98-7753	5	Roller

Ref.	Part Number	Qty.	Description
150	98-7754	1	Spring
160	98-7755	1	Ball
170	98-7756	2	Bolt
180	98-7757	2	O-Ring
190	100-9240	2	Bolt
200	98-7758	2	Bolt ASM
210	99-8375	1	Cover
220	99-8371	1	Nut-Hex
230	98-9711	1	Cord-Solenoid, Stop
240	99-8376	1	Nut-Hex
250	98-7759	1	Pipe-Drain
260	98-9712	1	Band-Cover
270	105-2886	1	Cover ASM

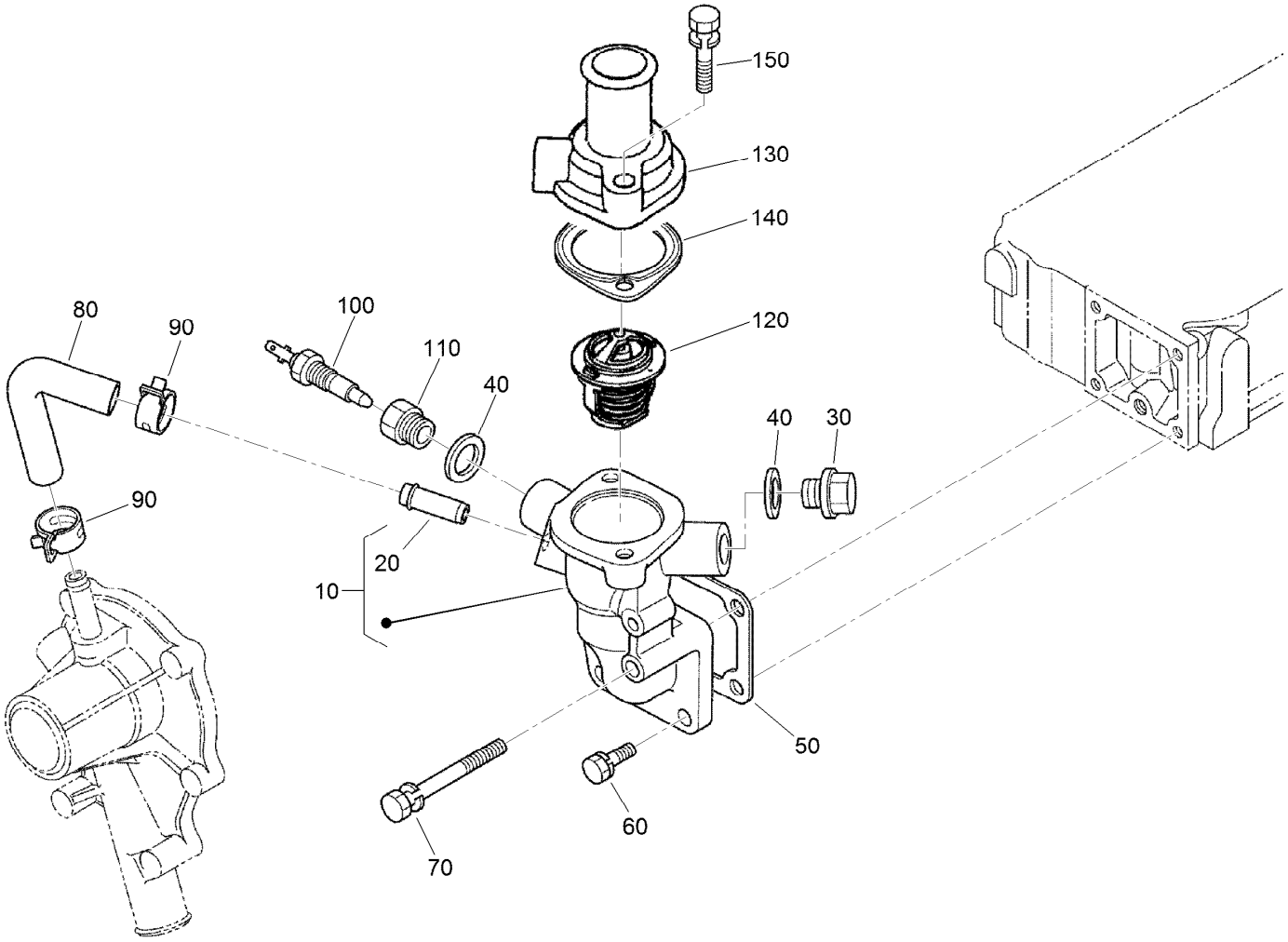

Water Flange and Thermostat Assembly

Ref.	Part Number	Qty.	Description
10	98-9713	1	Water Flange ASM
20	98-9580	1	Pipe-Return, Water
30	105-3747	1	Plug
40	99-3583	2	Gasket
50	98-9638	1	Gasket-Flange, Water
60	98-7692	3	Bolt
70	98-9356	1	Bolt
80	98-9578	1	Pipe-Return, Water
90	125-9078	2	Clamp-Hose
100	100-1983	1	Thermo-Switch
110	99-3581	1	Adapter
120	98-7778	1	Thermostat ASM
130	98-9471	1	Cover-Thermostat
140	105-3748	1	Gasket-Thermostat
150	98-7777	2	Bolt

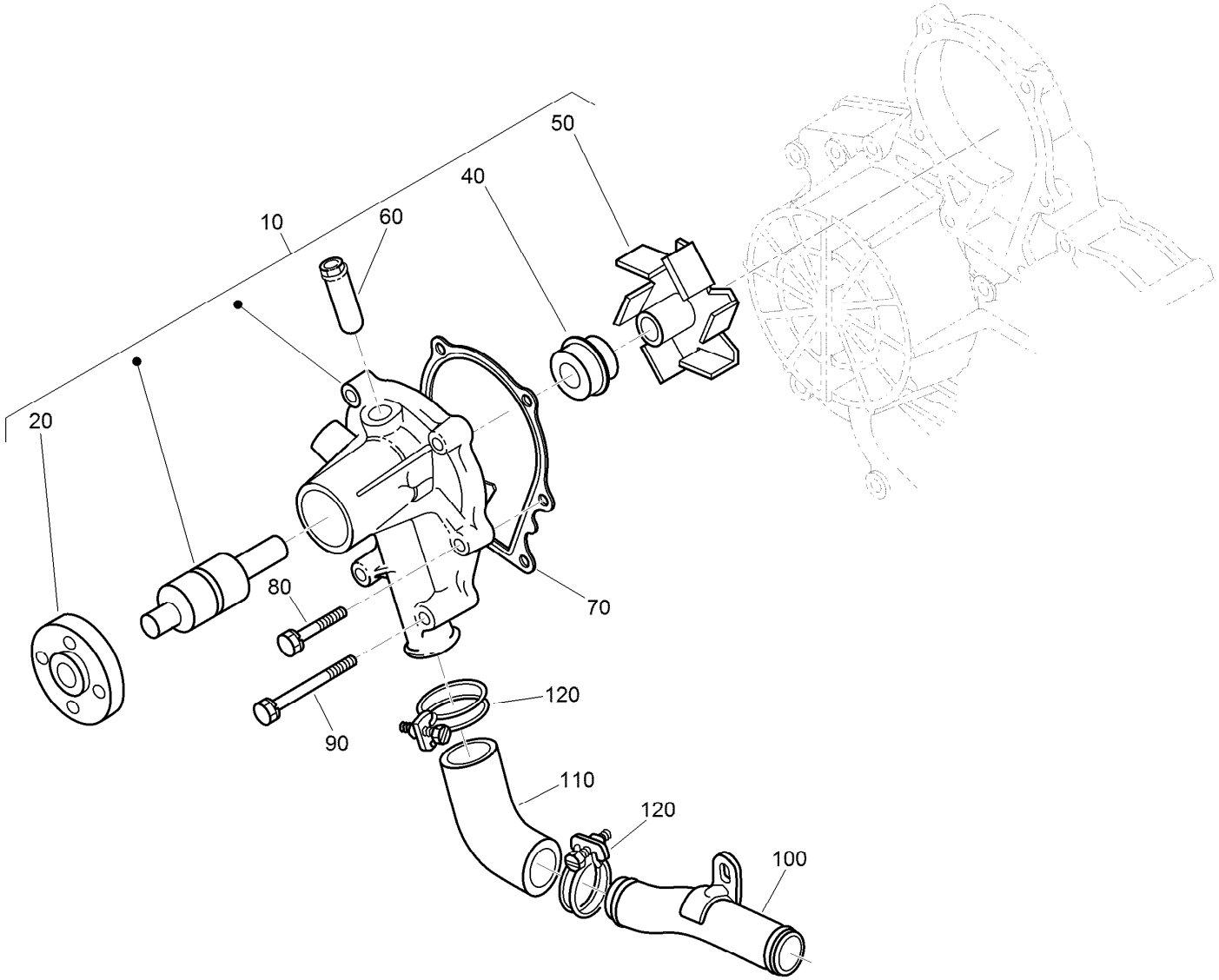

Water Pump and Water Pipe Assembly

Ref.	Part Number	Qty.	Description
10	107-9089	1	Water Pump ASM
20	99-3516	1	Flange-Pump, Water
40	105-3750	1	Mechanical Seal ASM
50	112-7017	1	Impeller-Pump, Water
60	100-1932	1	Pipe-Return, Water
70	99-3454	1	Gasket-Pump, Water
80	98-9353	4	Bolt
90	107-9090	2	Bolt
100	98-9716	1	Pipe-Water
110	107-9091	1	Pipe-Water
120	127-0439	2	Clamp-Hose

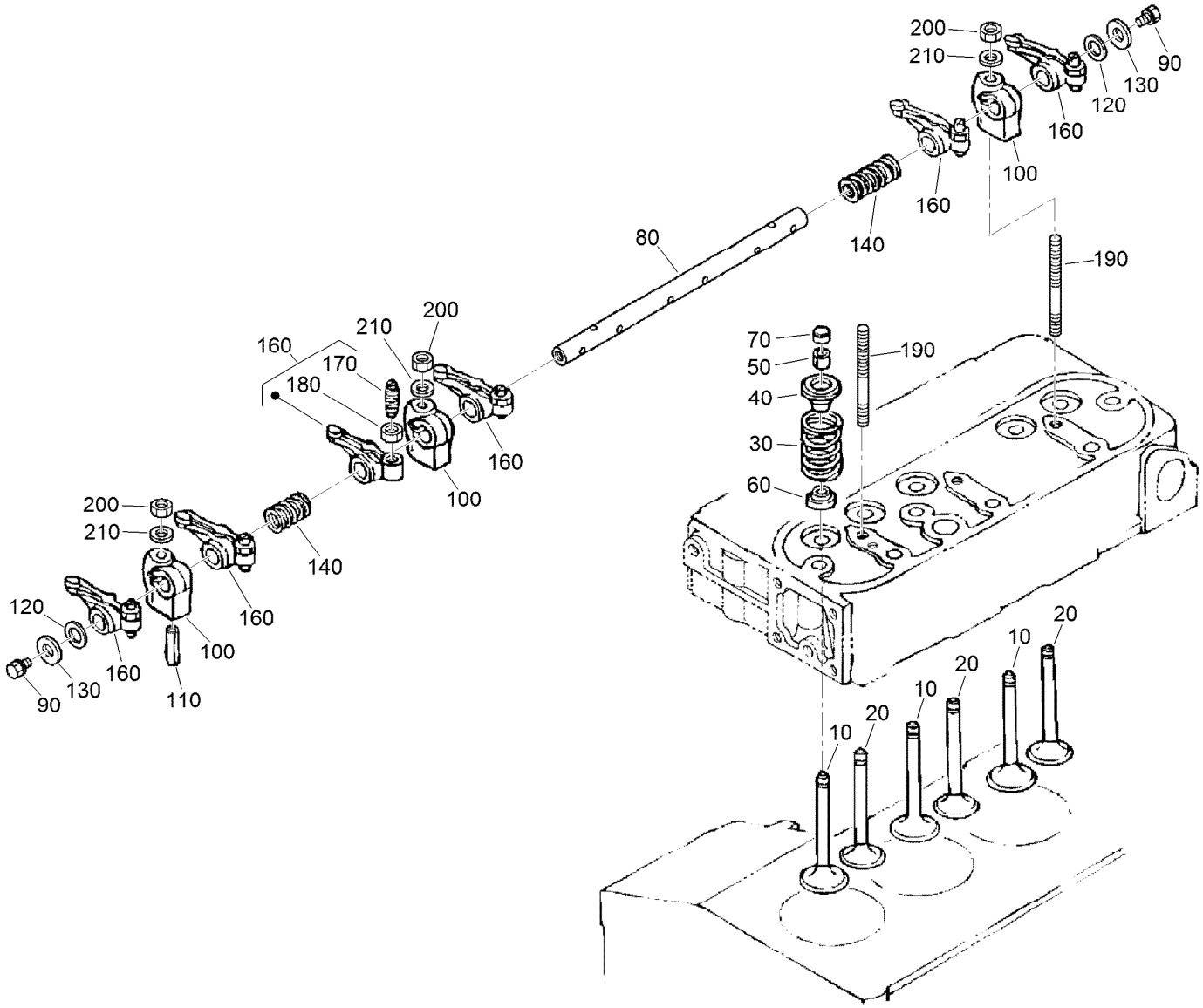

Valve and Rocker Arm Assembly

Ref.	Part Number	Qty.	Description
10	112-7018	3	Valve-Inlet
20	120-2564	3	Valve-Exhaust
30	98-9648	6	Spring-Valve
40	107-9092	6	Retainer-Spring
50	117-7572	6	Collet-Spring, Valve
60	99-8385	6	Seal-Stem, Valve
70	98-9497	6	Cap-Valve
80	130-1248	1	Shaft-Arm, Rocker
90	100-1762	2	Bolt
100	98-9505	3	Bracket-Arm, Rocker

Ref.	Part Number	Qty.	Description
110	105-3758	1	Pin-Spring
120	98-9507	2	Washer-Shaft, Rocker Arm
130	110-3832	2	Washer-Plain
140	98-9504	2	Spring-Arm, Rocker
160	112-7020	6	Rocker Arm ASM
170	98-9502	6	Screw-Adjusting
180	98-9503	6	Nut
190	98-9506	3	Stud
200	98-9393	3	Nut
210	98-9385	3	Washer-Flat

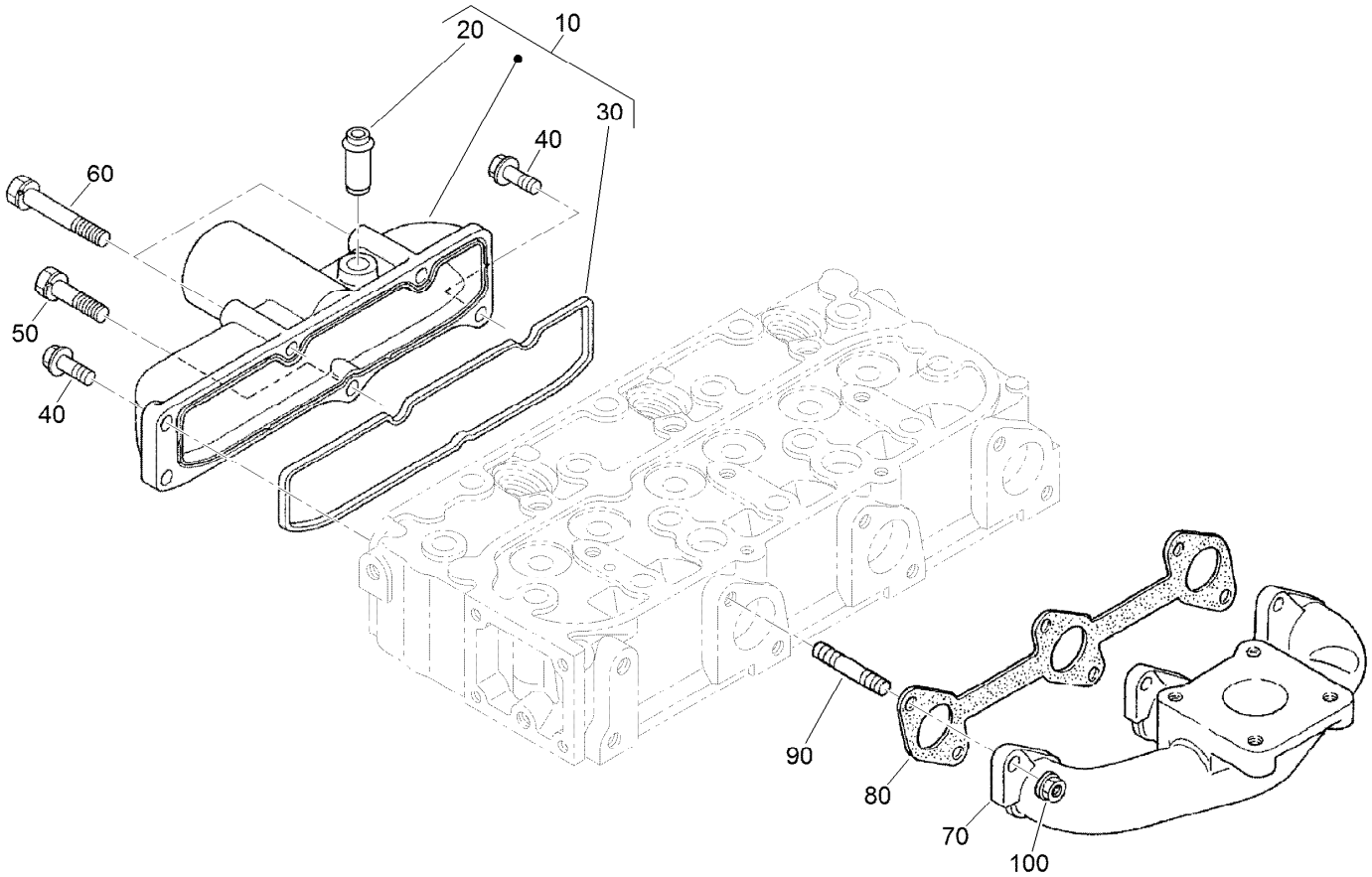

Inlet and Exhaust Manifold Assembly

Ref.	*Part Number*	*Qty.*	*Description*
10	108-6577	1	Inlet Manifold ASM
20	98-9492	1	Joint-Pipe, Breather
30	98-9609	1	Gasket-Manifold, Inlet
40	98-7605	3	Bolt
40	127-0403	3	Bolt-Flange
50	98-9353	1	Bolt
60	125-9063	2	Bolt-Sems
70	117-8847	1	Manifold-Exhaust
80	99-8327	1	Gasket-Manifold, Exhaust
90	98-9588	6	Stud
100	98-9665	6	Nut

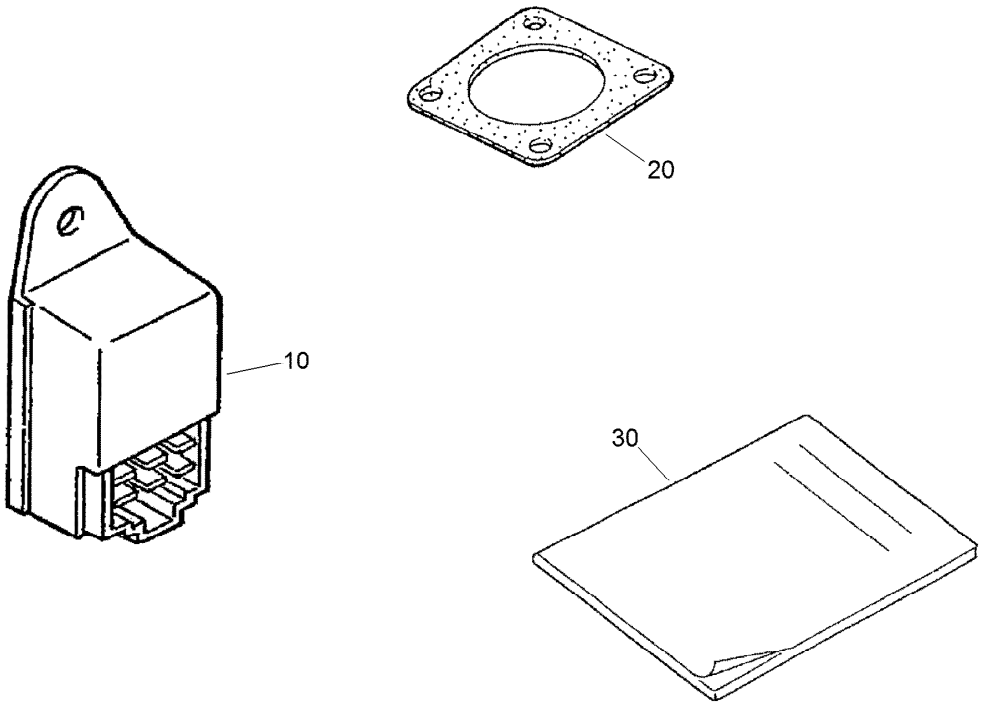

Miscellaneous Engine Parts

Ref.	*Part Number*	*Qty.*	*Description*
10	130-1211	1	Timer-Lamp, Glow
20	130-4596	1	Gasket-Muffler
30	115-4104	1	Operator Manual

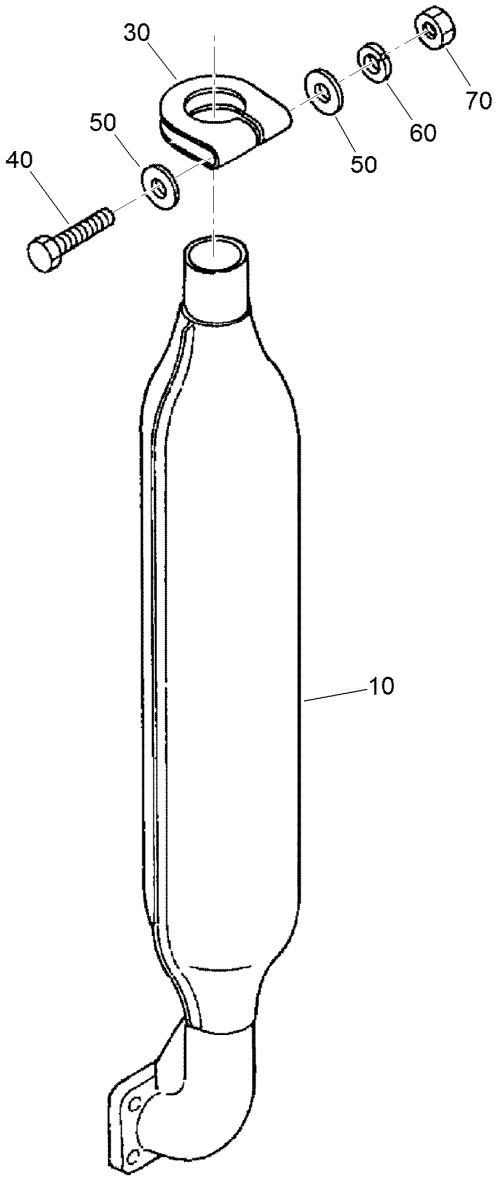

Muffler Assembly

Ref.	Part Number	Qty.	Description
10	130-1197	1	Muffler
30	130-1184	1	Clamp-Pipe, Muffler
40	130-1151	1	Bolt
50	98-7660	2	Washer-Plain
60	105-2893	1	Washer-Spring
70	98-7739	1	Nut

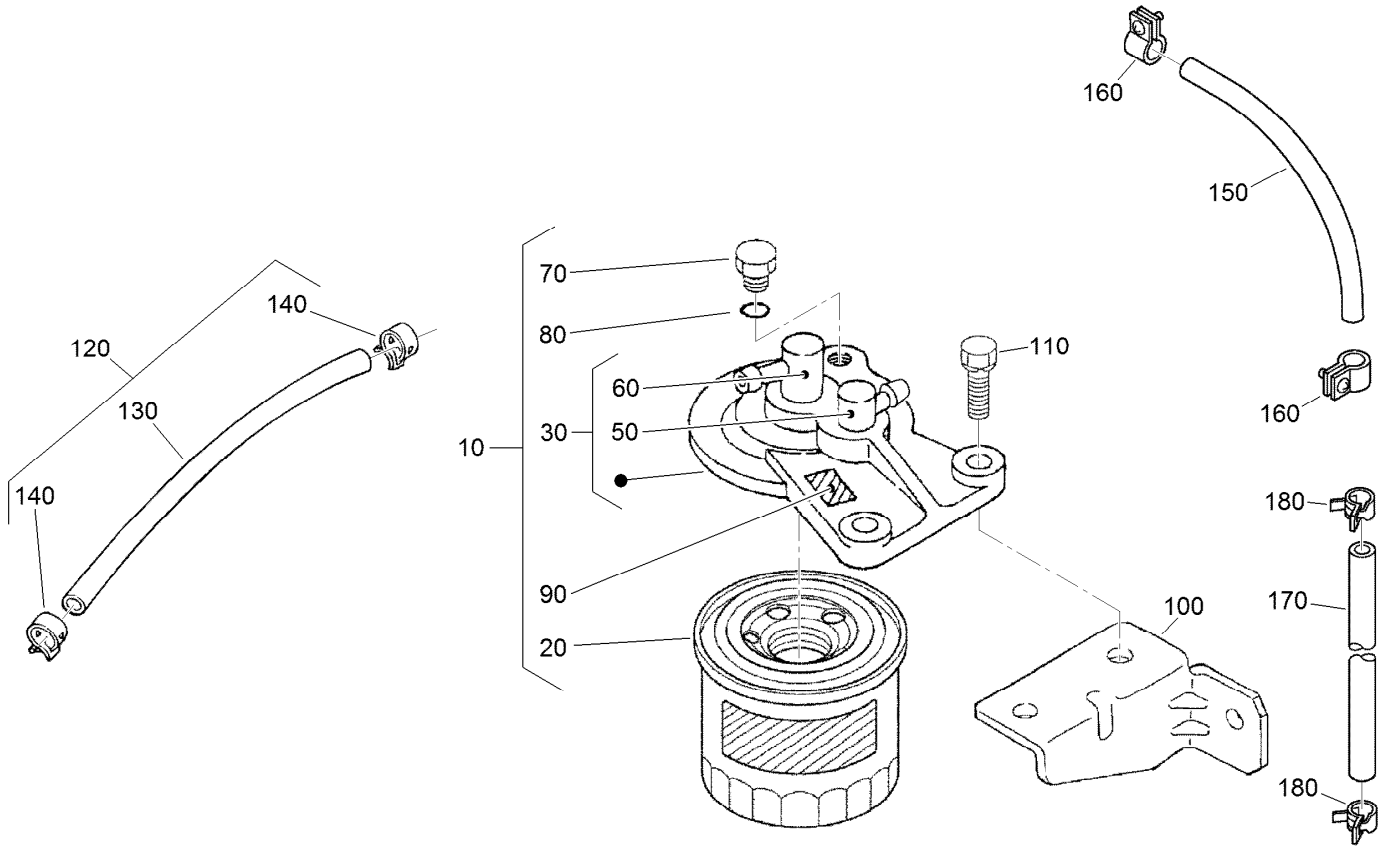

Fuel Filter Assembly

Ref.	Part Number	Qty.	Description
10	130-1188	1	Fuel Filter ASM
20	130-1187	1	Element-Filter
30	130-1189	1	Filter Cover ASM
50	130-1180	1	Joint-Pipe
60	130-1181	1	Joint-Pipe
70	130-1329	1	Plug-Filter Breather
80	130-1179	1	O Ring
90	130-1190	1	Mark-Form
100	130-1271	1	Holder-Fuel Filter

Ref.	Part Number	Qty.	Description
110	98-7610	2	Bolt
120	130-1270	1	Fuel Pipe ASM
130	130-1172	1	Tube-Fuel
140	100-2217	1	Clip-Pipe
150	130-1222	1	Pipe-Fuel
160	98-7616	4	Clip-Pipe
170	130-1330	1	Pipe-Over Flow, Fuel
180	98-7672	6	Clip-Pipe

Attachments and Accessories

For 30654 CT2240 Compact Triple 4-Wheel Drive Turf Mower

Product Name	Model/Part
MK3 200mm (8in) 4-Blade Cutting Unit	02800
MK3 200mm (8in) 6-Blade Cutting Unit	02801
MK3 200mm (8in) 8-Blade Cutting Unit	02802
MK3 200mm (8in) 10-Blade Cutting Unit	02803
Beacon Kit	02901
12 Volt Accessory Port Kit	02902
Blower Carrier Kit	02903
LSD Lock Kit	02904
ROPS Assist Kit	02905
Waste Bin Kit	02906
Deluxe Seat Kit	02909
Literature Service Record Book	02911
Kevlar Tyres Kit	02912
Road Light Kit (with Brake Lights)	02916
TÜV Kit - Speed Decal 20kph	02980
Tüv Kit - Deck Cover 3-Gang	02982
TÜV Kit - German Vehicle Serial Plate	02983
Warning Triangle	111-4250
Bracket-Number Plate	111-4710-03
Fuse-In Line	111-5101

Notes:

Notes:

TORO®

Count on it.