Form No. 3413-415 Rev D

TORO®

Count on it.

Parts Catalog

Greensmaster® 1000 Mower

Model No. 04055—Serial No. 400000000 and Up

Register at www.Toro.com.
Original Instructions (EN)

CE

3413-415 D

Ordering Replacement Parts

To order replacement parts, please supply the part number, the quantity, and the description of each part desired.

Understanding Reference Numbers

Each identified part in an illustration has a reference number. The reference number for a part also appears in the parts list, along with other information about the part.

This catalog uses two special reference number formats, one to indicate parts in a service assembly and another to indicate the quantity of a given part in an illustration.

Service Assembly Reference Numbers

Parts in service assemblies have reference numbers in the form a:b. The a represents the reference number of the entire service assembly and the b represents a sequential number unique to each part within the service assembly.

For example, a wheel assembly might be identified by reference number 6, the tire by 6:1, the valve by 6:2, and the wheel by 6:3. When you order the assembly identified by reference number 6, you receive all parts identified by reference numbers 6:1,6:2, and 6:3. However, you may also order any part individually. Reference numbers of this type appear in illustration and in parts lists.

Reference Numbers Indicating Quantity

In an illustration, if a reference number indicates more than one part, the reference number has the form nX y. The n represents the quantity of the part, the X is the multiplication symbol, and the y represents the reference number.

For example, in an illustration, the reference number 2X 37 means that two of the parts identified by reference number 37 are indicated.

Contents

Frame Assembly 4
Engine Mount and Frame Assembly 5
Reel Assembly 6
Reel Drive Assembly 7
Bellcrank Assembly 9
Drum Drive Assembly 10
Drum and Basket Assembly 12
Differential Assembly No. 93-6055 13
Inner Countershaft Assembly 14
Outer Crankshaft Assembly 15
Engine Assembly 16
Handle Assembly 17
Crankcase Assembly 19
Crankshaft and Piston Assembly 20
Intake and Exhaust Assembly 21
Air Cleaner Assembly 23
Governor Assembly 24
Recoil and Shroud Assembly 25
Recoil Assembly 26
Fuel Tank Assembly 27
Carburetor Assembly 28
Flywheel and Coil Assembly 29
Gear Reduction Assembly 30
Attachments and Accessories 31

© 2018—The Toro® Company
8111 Lyndale Avenue South
Bloomington, MN 55420

Contact us at www.Toro.com.
Printed in the USA.
All Rights Reserved

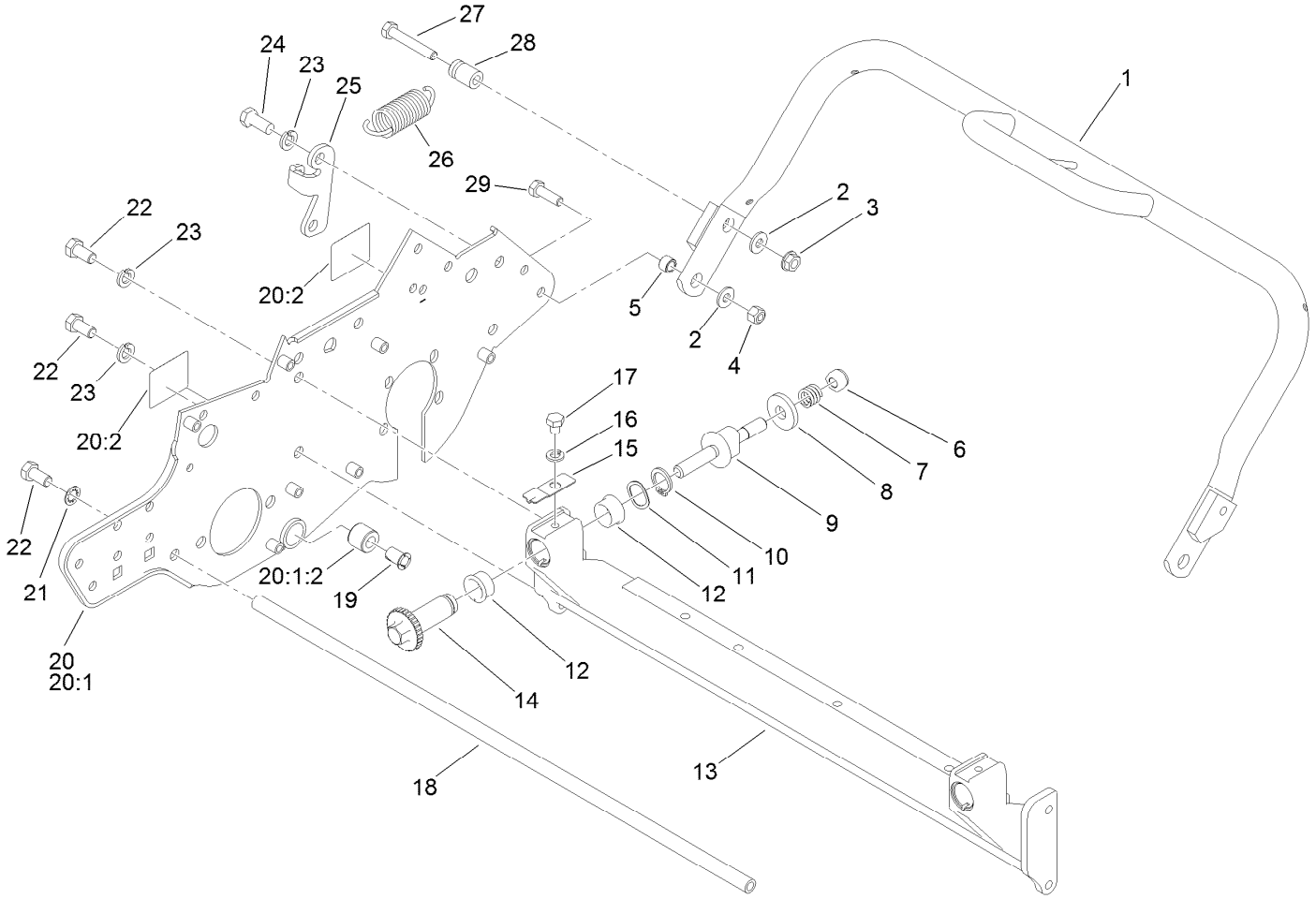

Frame Assembly

Ref.	Part Number	Qty.	Description
1	131-2027-03	1	Kickstand
2	3256-2	3	Washer-Flat
3	32128-25	1	Nut-HF
4	3296-29	2	Nut-Lock, NI
5	65-7910	2	Spacer
6	119-4039	2	Nut-Hex, NI
7	119-4156	2	Spring-Compression
8	119-4155	2	Washer-Hardened
9	115-7039	2	Screw-Adjuster, Bedbar
10	32120-93	2	Ring-Retaining
11	119-4164	2	Washer-Wave
12	106-5344	4	Bushing-Flange, Keyed
13	120-2707-01	1	Crossmember
14	106-5363	2	Shaft-Adjuster
15	99-2097	2	Detent
16	3253-4	2	Washer-Lock
17	322-26	2	Screw-HH

Ref.	Part Number	Qty.	Description
18	88-7110	1	Rod-Support, Frame
19	52-2890	1	Bushing-Nylon
20	93-6093	1	RH Side Plate ASM
20:1		1	RH Sideplate/Bushing ASM ●
20:1:2	63-9510	1	Bushing
20:2	93-9356	2	Decal-Warning, Belt
20:2	93-9389	2	Decal-Warning, Belt (Japan)
21	3254-6	2	Washer-Lock, Internal
22	323-4	6	Screw-HH
23	3253-21	4	Washer-Lock
24	323-5	2	Screw-HH
25	65-7890	1	Bracket
26	65-7880	1	Spring-Extension
27	322-10	1	Screw-HH
28	65-7900	1	Retainer-Spring
29	322-5	2	Screw-HH

● Not serviced separately

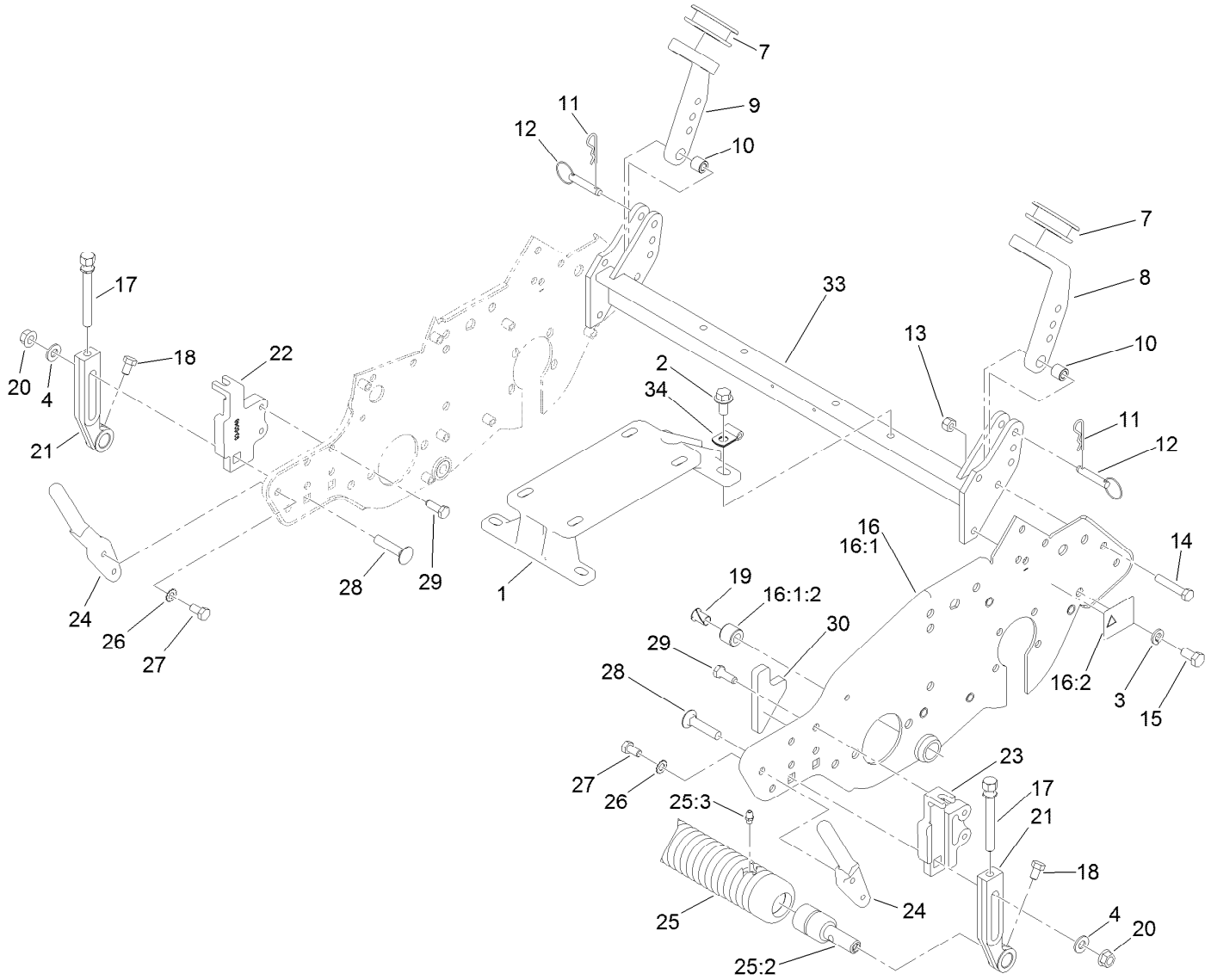

Engine Mount and Frame Assembly

Ref.	Part Number	Qty.	Description
1	120-2677	1	Mount-Engine
2	3234-1	4	Screw-HHF
3	3253-21	4	Washer-Lock
4	3256-24	2	Washer-Flat
7	65-7510	2	Grommet-Handle
8	93-6038	1	Arm-Support, Handle (LH)
9	93-6037	1	Arm-Support, Handle (RH)
10	93-6024	2	Bushing-Support, Handle
11	3290-467	2	Pin-Hair
12	93-6029	2	Pin-Clevis, Ring
13	3296-29	2	Nut-Lock, NI
14	322-9	2	Screw-HH
15	323-4	2	Screw-HH
16	93-6094	1	LH Side Plate ASM
16:1		1	LH Sideplate/Bushing ASM ●
16:1:2	63-9510	1	Bushing
16:2	93-9356	1	Decal-Warning, Belt
16:2	93-9389	1	Decal-Warning, Belt (Japan)

Ref.	Part Number	Qty.	Description
17	93-6051	2	Screw-HOC
18	322-1	2	Screw-HH
19	52-2890	1	Bushing-Nylon
20	32128-21	2	Nut-HF
21	93-6090	2	Arm-HOC
22	93-6048	1	Bracket-HOC, RH
23	93-6049	1	Bracket-HOC, LH
24	65-8570	2	Rod-Mounting
25	99-6241	1	Wiehle Roller ASM (.20 Inch Spacing)
25:2	52-3180	2	Bearing-Roller, Front
25:3	302-5	2	Fitting-Grease
26	3255-8	4	Washer-Lock
27	322-2	4	Screw-HH
28	3231-5	2	Screw-CARR
29	92-8914	4	Bolt-Face, Tapered
30	93-6064	1	Seal-Catcher, Grass
33	120-2711-01	1	Rear Frame ASM
34	133-2367	1	Clip

● Not serviced separately

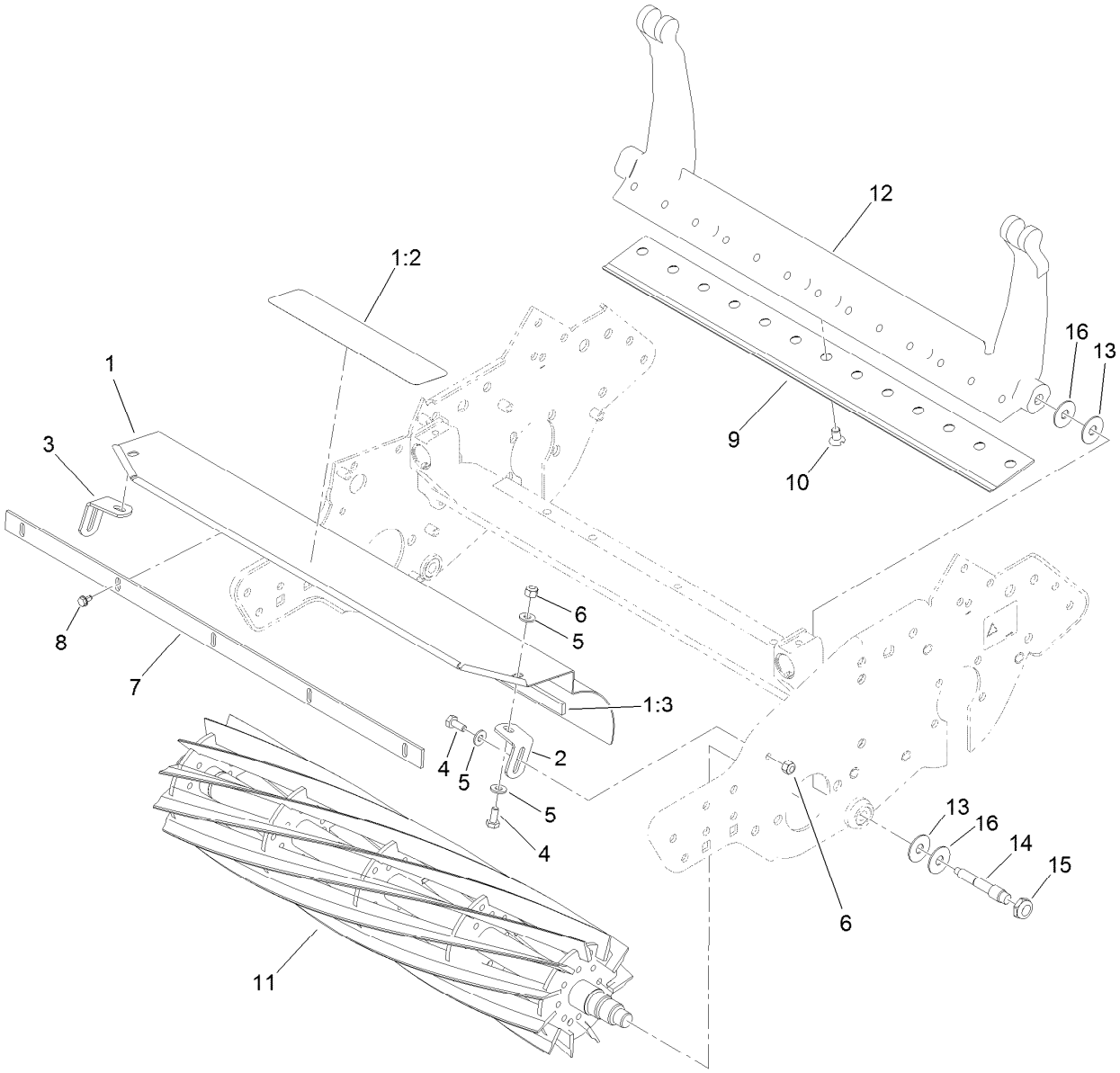

Reel Assembly

Ref.	Part Number	Qty.	Description
1	112-9471	1	Grass Shield ASM
1:2	84-6560	1	Decal-Warning (Japan)
1:2	93-8064	1	Decal-Danger, CE
1:3	106-2619	1	Strip-Seal
2	65-6450	1	Bracket-LH
3	65-6460	1	Bracket-RH
4	321-3	4	Screw-HH
5	3256-22	6	Washer-Flat
6	3296-42	4	Nut-Lock, NI
7	36-7260	1	Bar-Off, Cut
8	104-2065	5	Screw-HWH
9	108-4302	1	Bedknife-Tournament, Extended ●
9	108-4303	1	Bedknife-Microcut, Extended ●
9	112-7475	1	Bedknife-Edgemax (21 Inch Fairway) ●
9	115-1880	1	Bedknife-Edgemax, Microcut
9	115-1881	1	Bedknife-Edgemax, Tournament ●
9	63-8600	1	Bedknife-Fairway ●
9	93-4262	1	Bedknife-Microcut ●
9	93-4263	1	Bedknife-Tournament Cut ●
9	93-4264	1	Bedknife-Low Cut ●
9	94-6392	1	Bedknife-Highcut ●
10	119-4151	13	Screw-Bedknife
11	132-7312	1	ES 8 Blade Reel ASM (Optional Equipment)
11	132-7313	1	ES 11 Blade Reel ASM
11	132-7314	1	ES 14 Blade Reel ASM (Optional Equipment)
12	112-9279-03	1	Bedbar-Aggressive
12	112-9281-01	1	Bedbar-Standard
13	52-2900	4	Washer-Plastic
14	117-9493	2	Bolt-Bedbar
15	3296-28	2	Nut-Lock, NI
16	52-2860	4	Washer

● Optional Equipment

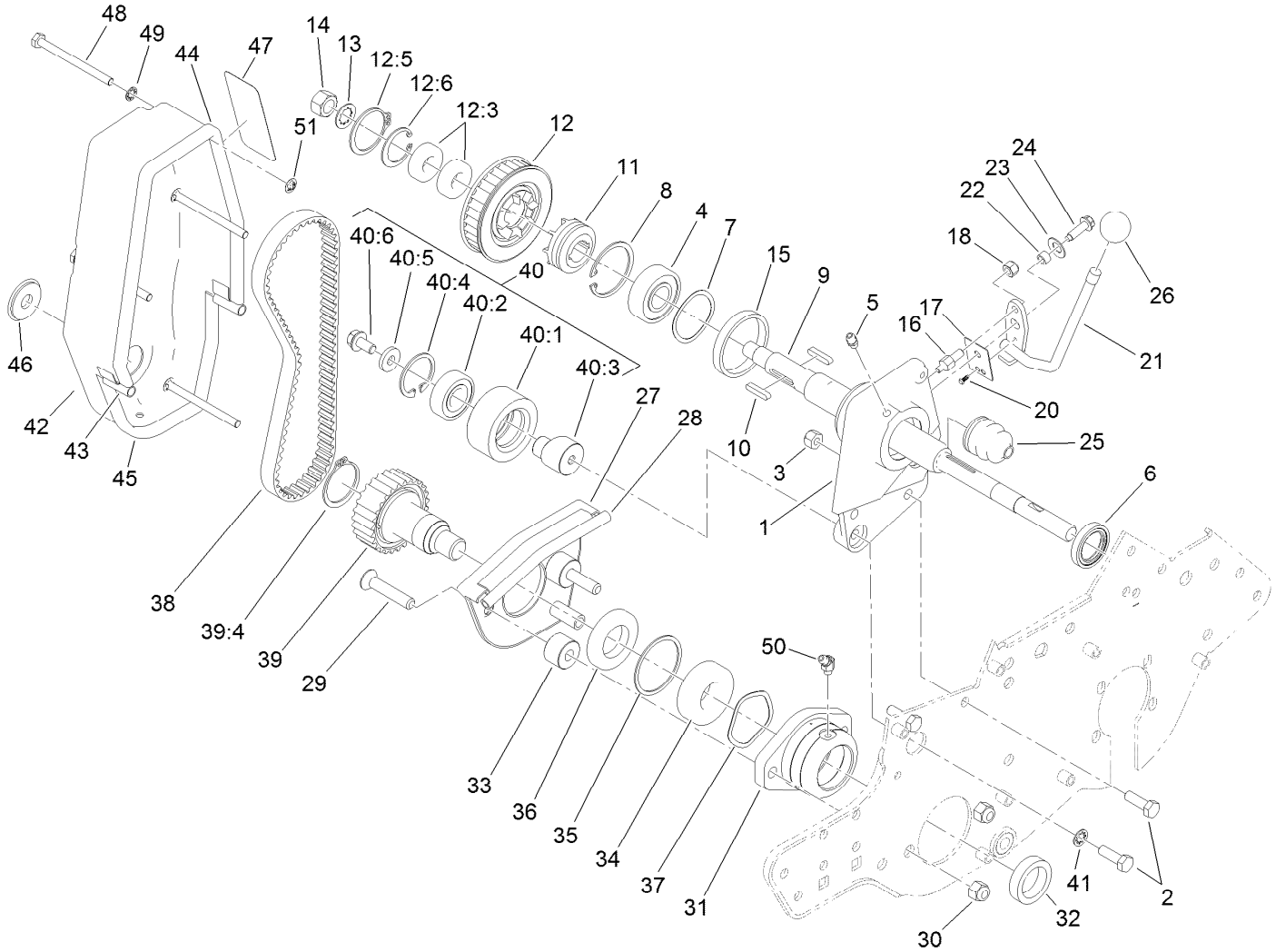

Reel Drive Assembly

Ref.	Part Number	Qty.	Description
1	120-3180	1	Housing-Clutch
2	322-5	3	Screw-HH
3	3296-29	2	Nut-Lock, NI
4	251-318	1	Bearing-Ball
5	302-5	1	Fitting-Grease
6	253-118	1	Seal-Oil
7	88-7720	1	Spring-Wave
8	32151-75	1	Ring-Retaining
9	93-6056	1	Shaft-Power
10	88-7150	2	Key-Square
11	65-6940	1	Clutch-Slider, Jaw
12	88-7830	1	Clutch And Pulley ASM
12:3	251-336	2	Bearing-Ball
12:5	32151-95	1	Ring-Retaining
12:6	32151-89	1	Ring-Retaining, Bowed
13	3254-4	1	Washer-Lock/Int
14	3219-5	1	Nut-Hex
15	65-6970	1	Seal-Felt
16	93-9014	1	Pin-Clutch, Actuator
17	65-6290	1	Spring-Detent, Clutch
18	3296-42	1	Nut-Lock, NI

Ref.	Part Number	Qty.	Description
20	95-5731	1	Screw-Drive
21	88-7170	1	Lever-Clutch
22	88-7860	1	Spacer
23	3290-414	1	Washer-Belleville
24	80-0700	1	Screw-HH, Torx
25	65-8960	1	Boot-Clutch
26	233-69	1	Knob
27	65-7190-01	1	Cover-Arm
28	65-7131	1	Seal-Cover, Strip
29	3289-23	2	Capscrew
30	3296-39	2	Nut-Lock, NI
31	65-8640	1	Housing-Bearing
32	253-96	1	Seal-Oil
33	65-8290	2	Standoff-Cover
34	251-342	1	Bearing-Ball
35	32151-92	1	Ring-Retaining
36	253-163	1	Seal
37	3290-485	1	Washer-Wave
38	65-6200	1	Belt
39	88-7840	1	Pulley And Drive ASM
39:4	32151-95	1	Ring-Retaining

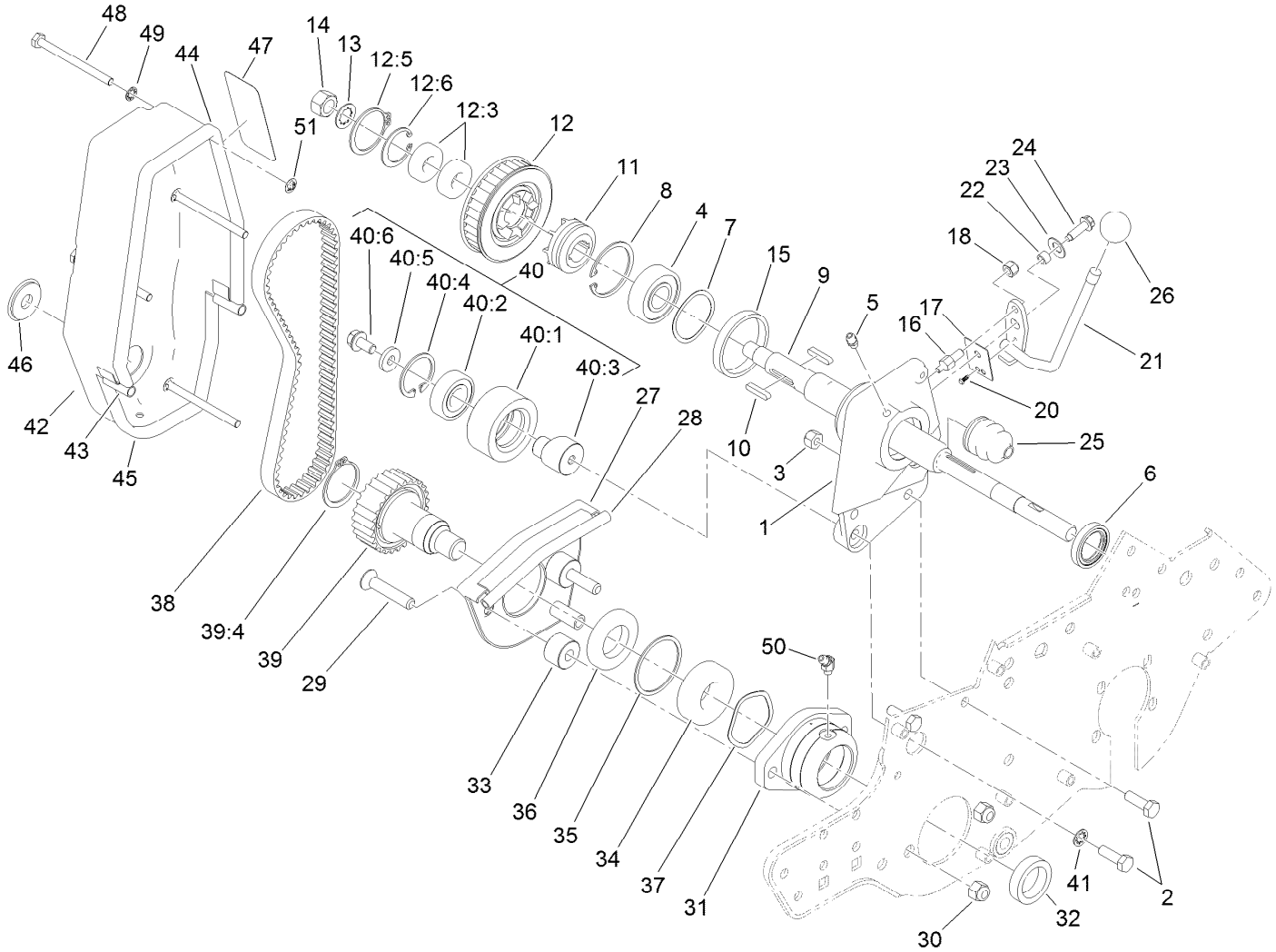

Reel Drive Assembly (continued)

Ref.	Part Number	Qty.	Description
40	88-7850	1	Idler Pulley ASM
40:1	88-7180	1	Pulley-Idler
40:2	38-7820	1	Bearing-Ball
40:3	88-7190	1	Spacer
40:4	32120-42	1	Ring-Retaining
40:5	88-7200	1	Washer-Flat
40:6	3234-14	1	Screw-HHF
41	3254-2	1	Washer-Lock, Internal
42	88-7700-01	1	Cover-Drive, Reel
43	88-7770	2	Strip-Seal, Front

Ref.	Part Number	Qty.	Description
44	88-7790	1	Strip-Seal, Upper
45	88-7800	1	Strip-Seal, Lower
46	237-160	1	Plug-Rubber
47	92-4817	1	Decal-Engagement, Reel (Japan)
47	93-7346	1	Decal-Engagement, Reel
48	321-20	4	Screw-HH
49	3254-8	4	Washer-Lock
50	302-11	1	Fitting-Lube, 45 DEG
51	106-8737	4	Nut-Retainer

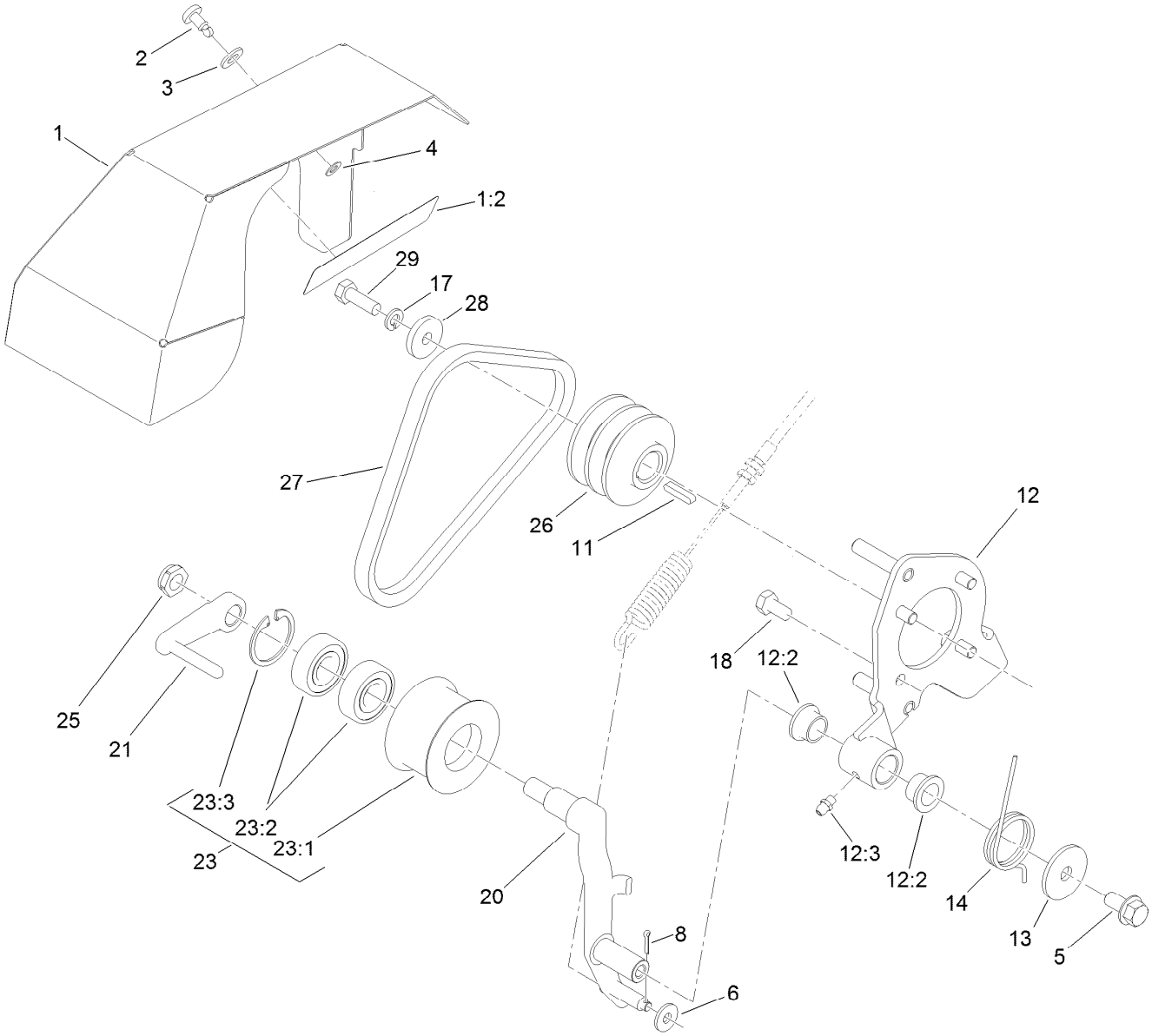

Bellcrank Assembly

Ref.	Part Number	Qty.	Description
1	131-8783	1	Bellcrank Cover ASM
1:2	125-5245	1	Decal-Danger, Shields
2	93-6074	1	Stud
3	3256-70	1	Washer-Flat
4	93-6073	1	Washer-Nylon
5	110-1718	1	Screw-HHF
6	3256-78	1	Washer-Flat
8	3272-5	1	Pin-Cotter
11	88-7150	1	Key-Square
12	125-5210	1	Clutch Bracket ASM
12:2	65-8770	2	Bushing-Bellcrank
12:3	302-5	1	Fitting-Grease
13	93-6099	1	Washer
14	93-6012	1	Spring-Torque, Clutch Lever

Ref.	Part Number	Qty.	Description
17	3253-4	1	Washer-Lock
18	99-5132	4	Bolt
20	127-2235	1	Lever-Clutch
21	112-9390	1	Guide-Belt
23	112-9385	1	Idler Pulley ASM
23:1	98-7297	1	Pulley-Idler
23:2	38-7820	2	Bearing-Ball
23:3	32120-42	1	Ring-Retaining
25	3296-45	1	Nut-Hex
26	115-7306	1	Pulley-Drive, Input
27	92-9218	1	Belt-V, Matched Set
28	65-8270	1	Washer
29	33114-025	1	Screw-HH

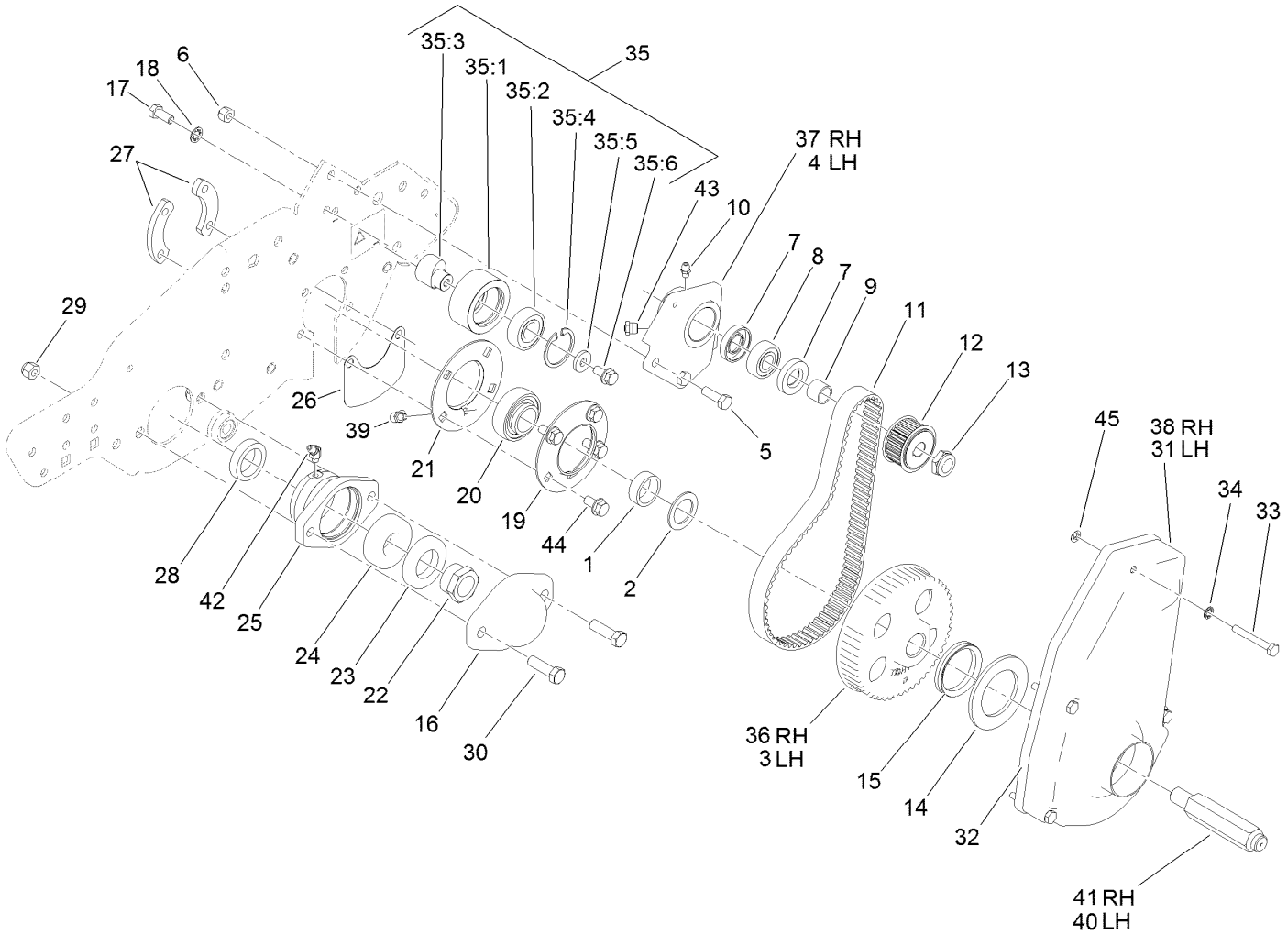

Drum Drive Assembly

Ref.	Part Number	Qty.	Description
1	88-7530	2	Spacer
2	88-7540	2	Washer-Backup
3	105-5365	1	Pulley-Drum, LH
4	108-9414	1	Housing-Support, Differential (LH)
5	322-5	4	Screw-HH
6	3296-29	4	Nut-Lock, NI
7	253-160	4	Seal-Grease
8	251-338	2	Bearing-Ball
9	86-7130	2	Spacer-Pulley
10	302-5	2	Fitting-Grease
11	65-6210	2	Belt
12	65-6660	2	Pulley
13	3296-57	2	Nut-Lock, NI
14	94-9018	2	Washer-Plastic
15	253-161	2	Seal-V-Ring
16	65-6220-01	1	Cover-End, Reel
17	322-2	2	Screw-HH
18	3254-2	2	Washer-Lock, Internal
19	120-2739	2	Flangette
20	88-7880	2	Bearing

Ref.	Part Number	Qty.	Description
21	95-0923	2	Flangette
22	92-7302	1	Nut-Lock, Bearing
23	253-163	1	Seal
24	251-342	1	Bearing-Ball
25	65-8640	1	Housing-Bearing
26	65-8720	2	Closure-Plate, Side
27	65-8730	4	Clamp-Bearing
28	253-96	1	Seal-Oil
29	3296-39	2	Nut-Lock, NI
30	323-7	2	Screw-HH
31	88-7680-01	1	Cover-Belt Drum, LH
32	88-7810	2	Seal-Strip, Drum Cover
33	321-11	8	Screw-HH
34	3254-8	8	Washer-Lock
35	88-7850	2	Idler Pulley ASM
35:1	88-7180	1	Pulley-Idler
35:2	38-7820	1	Bearing-Ball
35:3	88-7190	1	Spacer
35:4	32120-42	1	Ring-Retaining
35:5	88-7200	1	Washer-Flat
35:6	3234-14	1	Screw-HHF

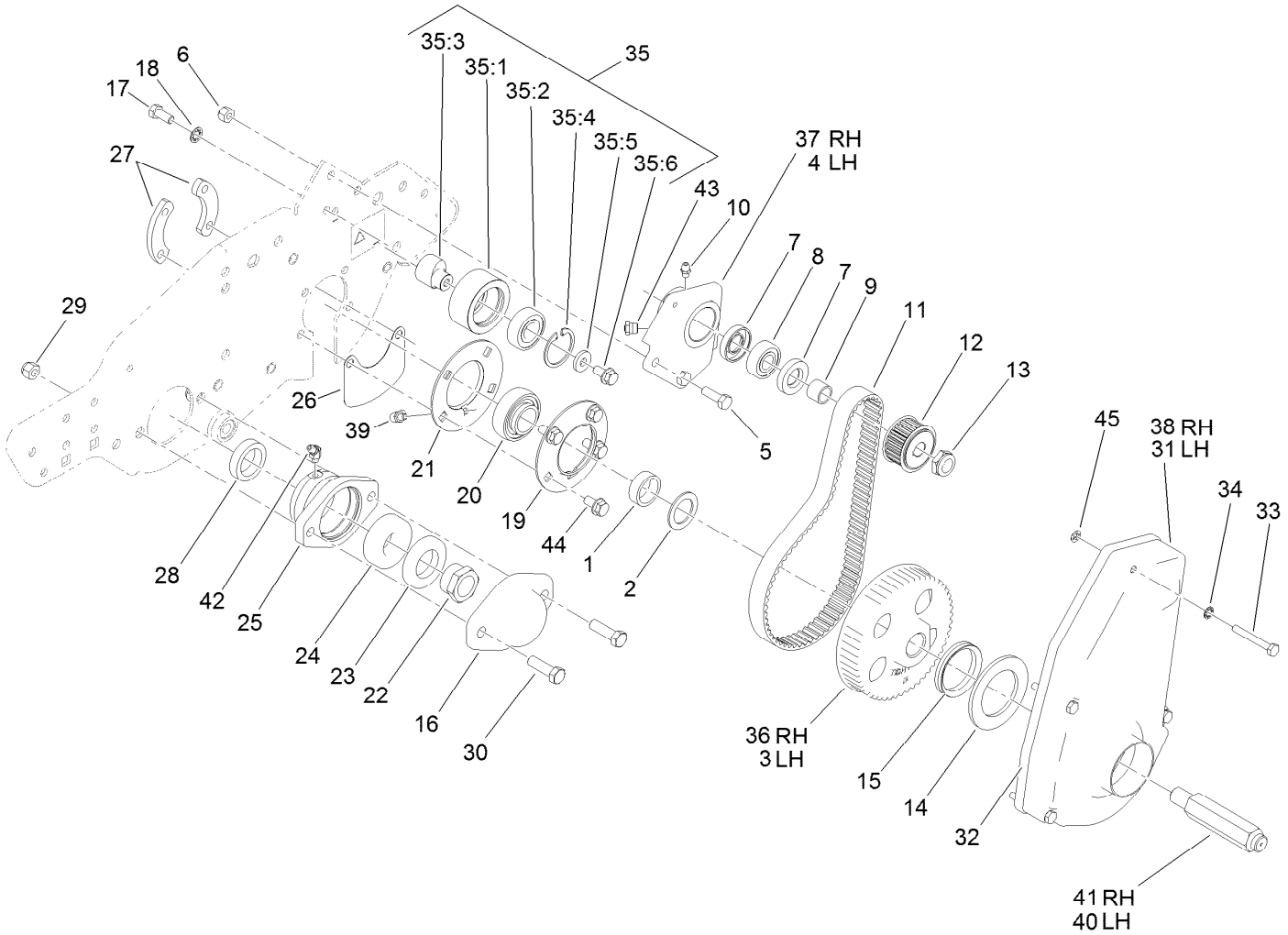

Drum Drive Assembly (continued)

Ref.	Part Number	Qty.	Description
36	105-5364	1	Pulley-Drum, RH
37	108-9416	1	Housing-Support, Differential (RH)
38	88-7690-01	1	Cover-Drum, Belt (RH)
39	104-1843	2	Fitting-Grease, 90 DEG
40	88-7580	1	Shaft-Wheel, Transport (LH)
41	88-7590	1	Shaft-Wheel, Transport (RH)
42	302-11	1	Fitting-Lube, 45 DEG
43	302-34	2	Fitting-Lube
44	3234-14	8	Screw-HHF
45	106-8737	8	Nut-Retainer

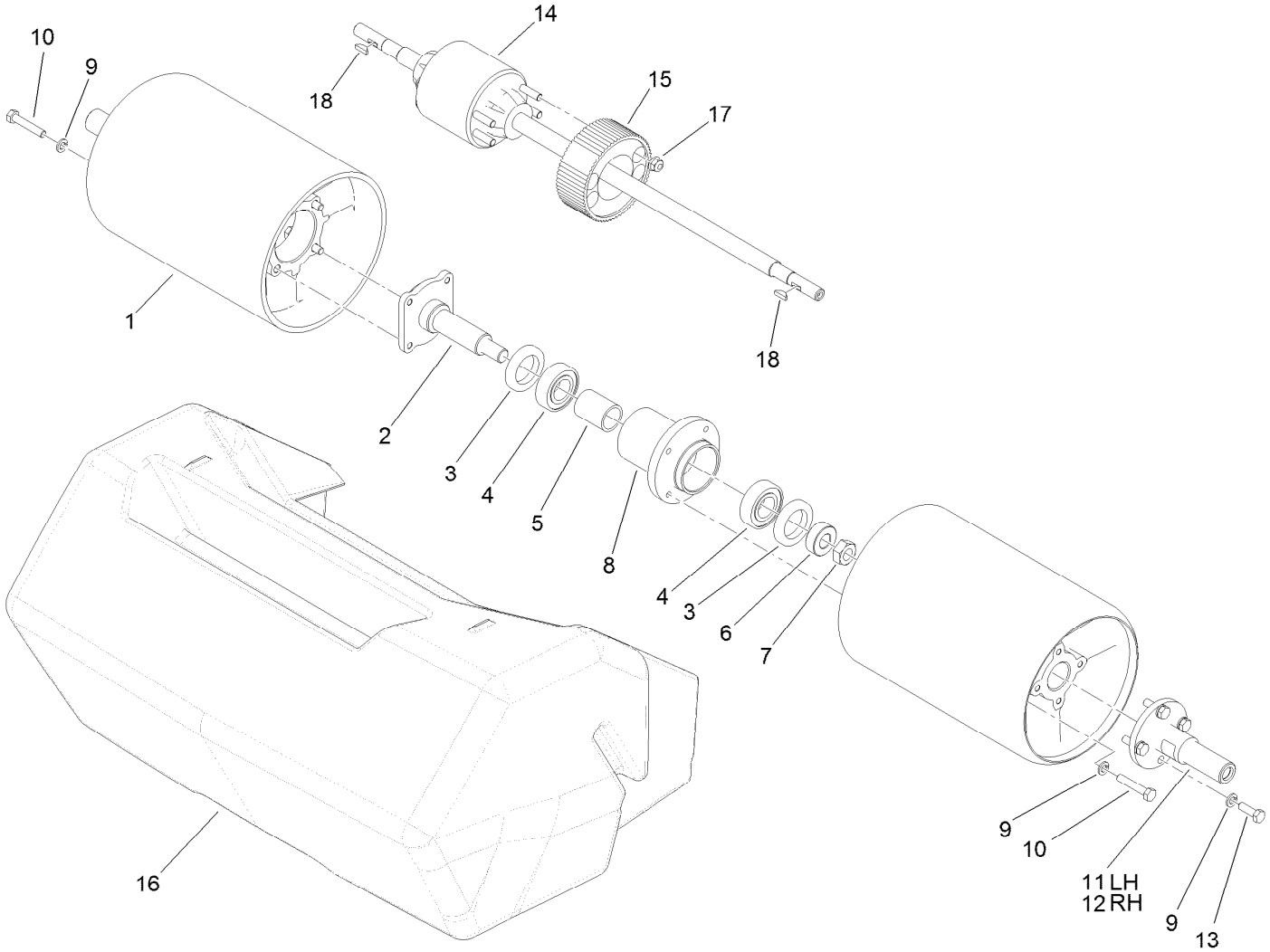

Drum and Basket Assembly

Ref.	Part Number	Qty.	Description
1	117-1408	2	Drum
2	94-5850	1	Spindle-Drum
3	253-159	2	Seal
4	251-82	2	Bearing-Ball
5	65-6520	1	Spacer
6	65-6530	1	Spacer
7	3296-33	1	Nut-Lock, NI
8	132-6971	1	Hub-Drum
9	3253-4	16	Washer-Lock

Ref.	Part Number	Qty.	Description
10	322-9	8	Screw-HH
11	132-3841	1	Shaft-Drum Extension, RH
12	132-3842	1	Shaft-Drum Extension, LH
13	322-5	8	Screw-HH
14	93-6055	1	Differential ASM
15	65-9120	1	Pulley-Housing, Differential
16	130-0109	1	Basket-Grass
17	104-8300	4	Nut-HF, NI
18	3257-30	2	Key-Woodruff

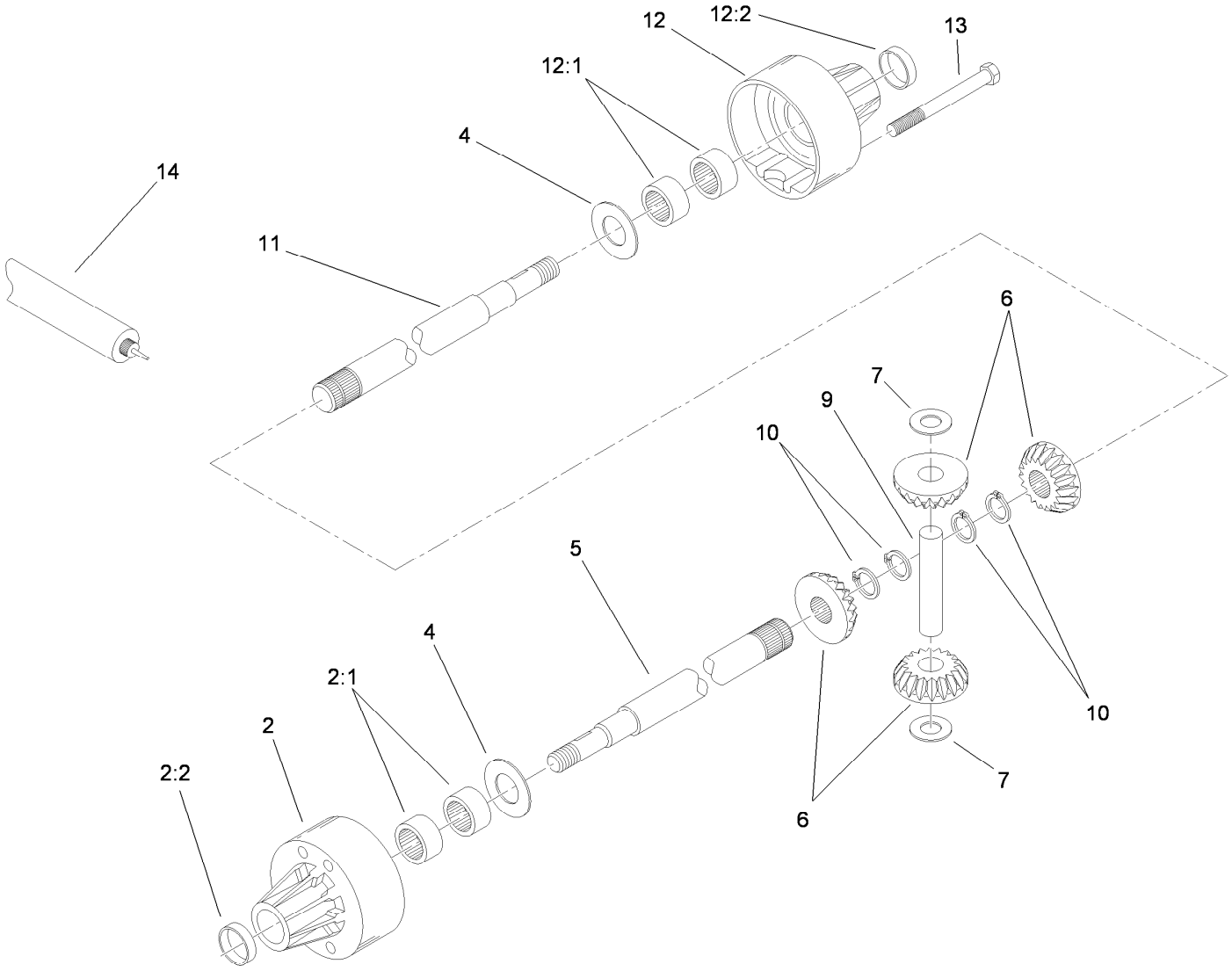

Differential Assembly No. 93-6055

Ref.	*Part Number*	*Qty.*	*Description*
2	95-5741	1	Carrier-Differential
2:1	95-5738	4	Bearing-Needle
2:2	95-5737	2	Seal-Oil
4	95-5745	4	Washer
5	95-5736	1	Axle (Long)
6	104-0503	1	Gear Set-Differential
7	95-5744	2	Washer-Flat
9	95-5747	1	Pin-Drive
10	95-5746	4	Ring-Retaining
11	95-5735	1	Axle (Short)
12	95-5740	1	Carrier-Differential
12:1	95-5738	4	Bearing-Needle
12:2	95-5737	2	Seal-Oil
13	95-5739	4	Screw
14	95-5734	1	Grease Petro Dist.

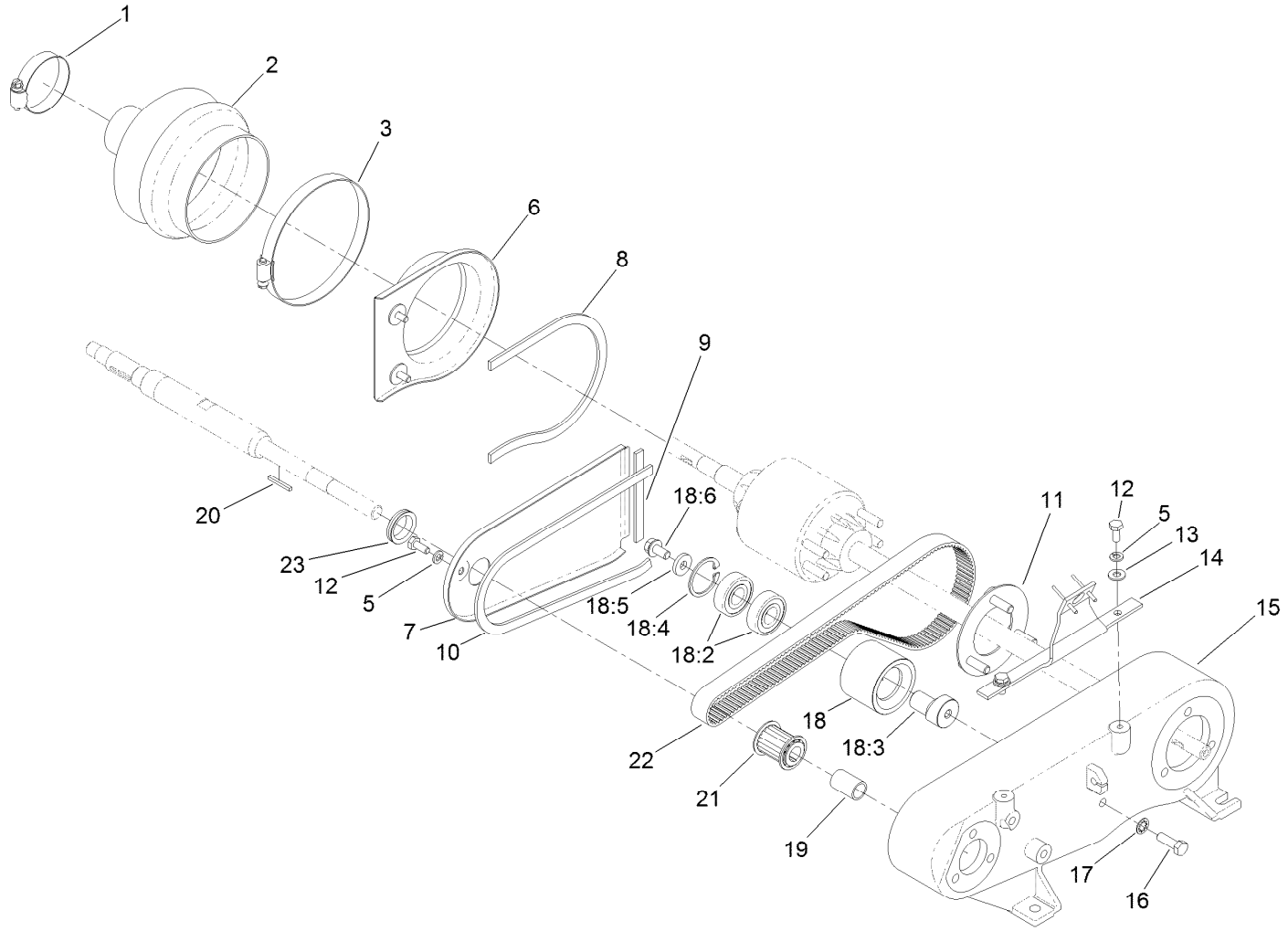

Inner Countershaft Assembly

Ref.	Part Number	Qty.	Description
1	2412-139	1	Clamp-Hose
2	65-6800	1	Boot-Differential
3	2412-46	1	Clamp
5	3253-3	5	Washer-Lock
6	88-7250-03	1	Cover-Box, Rear
7	88-7240-03	1	Cover-Box, Front
8	65-6902	1	Strip-Seal, Cover
9	65-6903	1	Strip-Seal, Cover
10	65-6901	1	Strip-Seal, Cover
11	65-6720	1	Plate-Screw
12	321-3	5	Screw-HH
13	3256-22	2	Washer-Flat
14	93-1448	1	Bracket-Cover
15	88-7230	1	Housing-Shaft, Counter

Ref.	Part Number	Qty.	Description
16	322-4	1	Screw-HH
17	3254-2	1	Washer-Lock, Internal
18	88-7870	1	Idler Pulley ASM
18:2	38-7820	2	Bearing-Ball
18:3	88-7380	1	Spacer-Pulley
18:4	32120-42	1	Ring-Retaining
18:5	88-7200	1	Washer-Flat
18:6	3234-14	1	Screw-HHF
19	86-7140	1	Spacer
20	65-6850	1	Key-Square
21	65-8910	1	Pulley-Countershaft
22	65-9080	1	Belt
23	125-5201	1	Seal-V-Ring

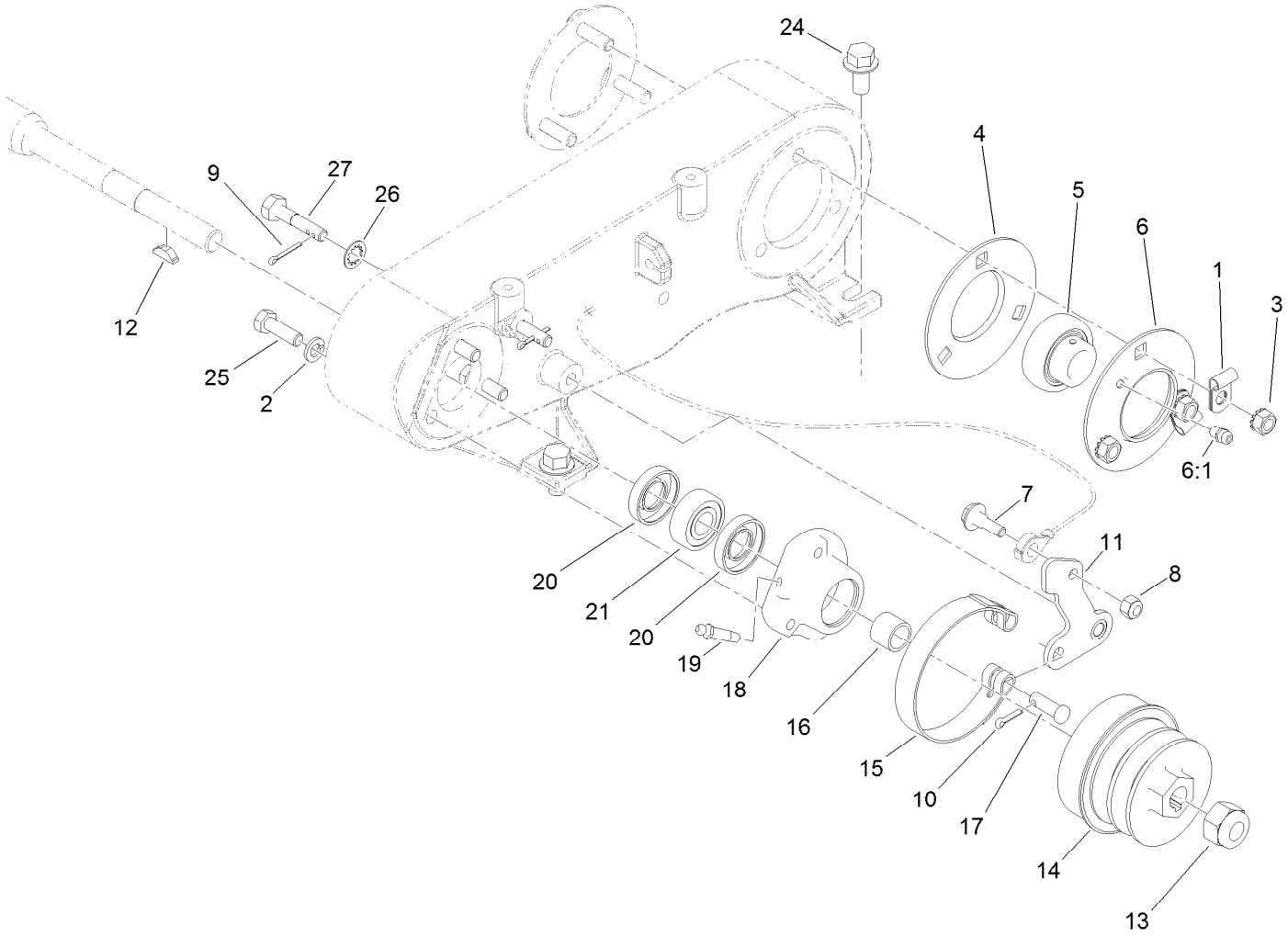

Outer Crankshaft Assembly

Ref.	Part Number	Qty.	Description
1	88-7970	2	Clip
2	3253-4	3	Washer-Lock
3	32149-1	3	Nut-Keps
4	65-6710	1	Flangette-Bearing
5	108-7663	1	Bearing-Race, Extended
6	65-6700	1	Flangette-Lube
6:1	302-55	1	Fitting-Grease
7	11-9030	1	Screw-Shoulder
8	3296-42	1	Nut-Lock, NI
9	3272-6	2	Pin-Cotter
10	3272-8	1	Pin-Cotter
11	117-1433	1	Lever-Brake, Lower
12	3257-30	1	Key-Woodruff

Ref.	Part Number	Qty.	Description
13	3296-63	1	Nut-Lock, NI
14	92-9212	1	Pulley-Shaft, Input
15	65-8700	1	Band-Brake
16	86-7130	1	Spacer-Pulley
17	283-75	1	Pin-Clevis
18	120-3163	1	Housing-Bearing
19	302-64	1	Fitting-Grease
20	253-160	2	Seal-Grease
21	251-338	1	Bearing-Ball
24	3234-1	4	Screw-HHF
25	322-5	3	Screw-HH
26	3254-6	2	Washer-Lock, Internal
27	117-1430	2	Bolt-Mount, Brake

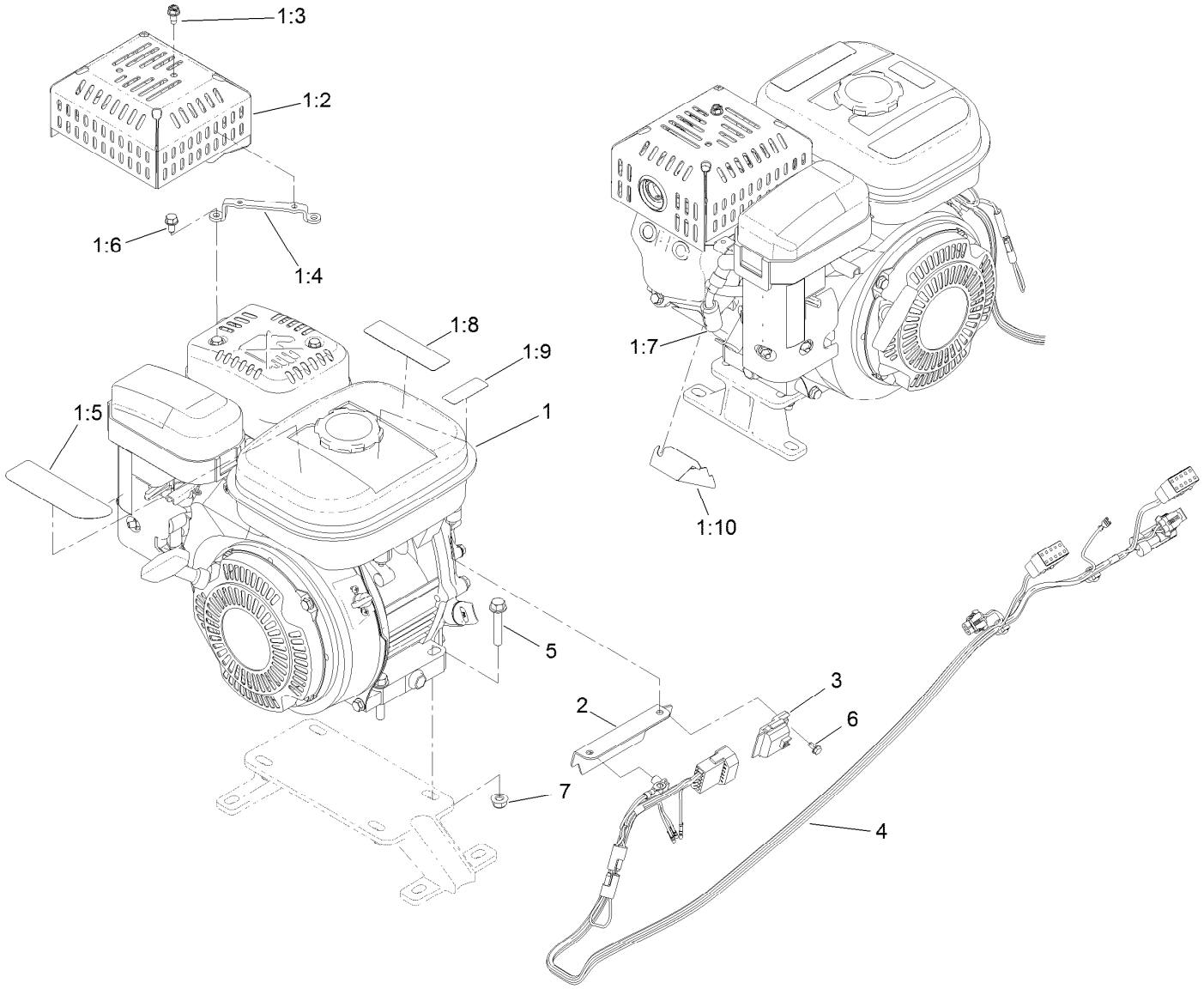

Engine Assembly

Ref.	Part Number	Qty.	Description
1	133-8843	1	Engine ASM
1:2	120-9240-03	1	Guard-Muffler
1:3	120-9551	2	Screw-HWH
1:4	115-7352	1	Bracket-Guard, Muffler
1:5	120-2769	1	Decal-Warning
1:6	104-2628	2	Screw-HWH
1:7	112-1540	1	Ferrite-Snap On
1:8	117-2718	1	Decal-Arrester, Spark

Ref.	Part Number	Qty.	Description
1:9	130-8322	1	Decal-Warning, Ethanol
1:10	133-2355	1	Shield
2	120-2705-03	1	Plate-Harness, Wire
3	1-323430	1	Module-Interlock
4	122-0964	1	Harness-Wire
5	94-5780	4	Screw-HWH
6	104-2065	1	Screw-HWH
7	104-8300	4	Nut-HF, NI

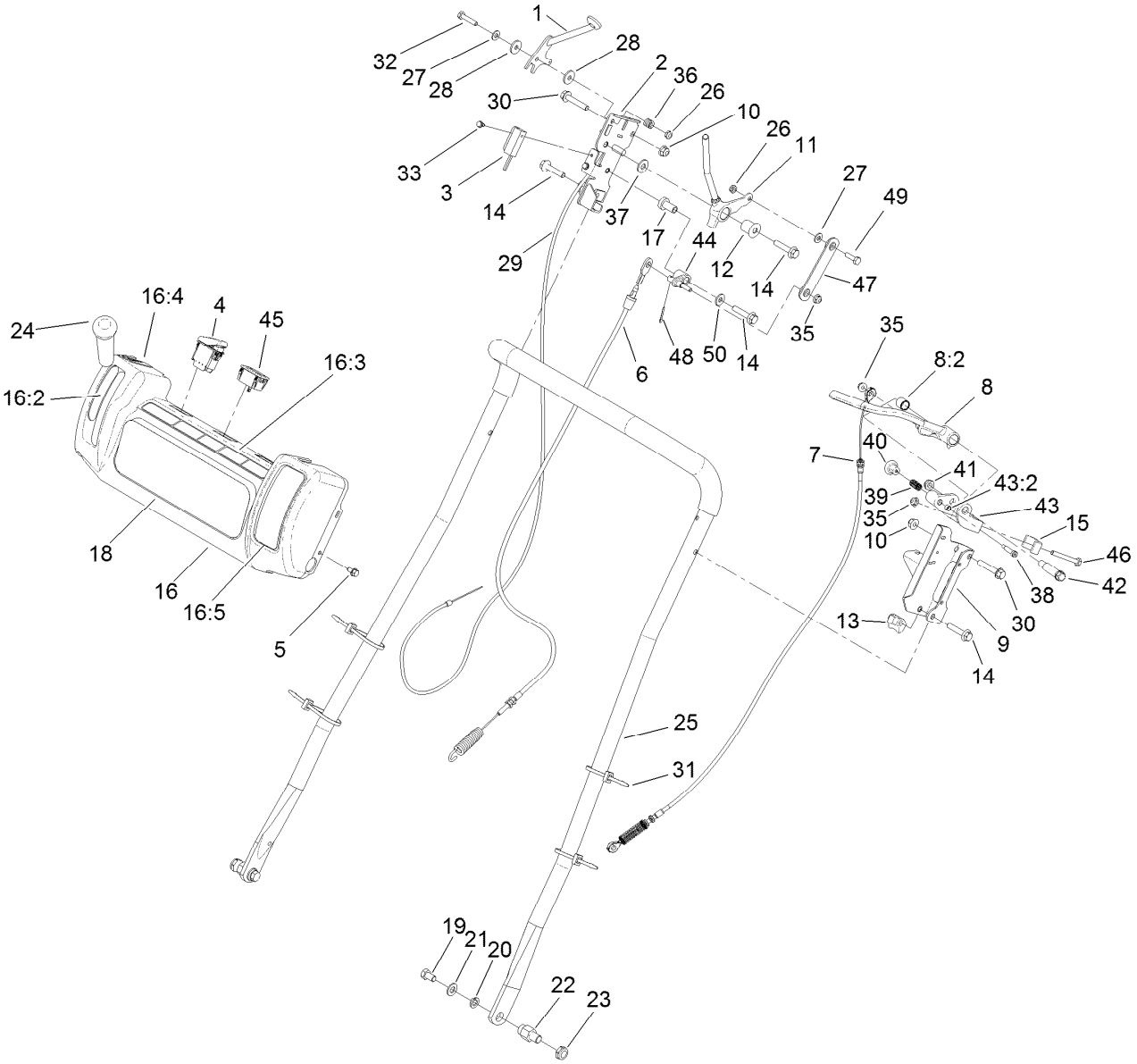

Handle Assembly

Ref.	Part Number	Qty.	Description
1	120-2697	1	Lever-Throttle
2	125-5188-03	1	Bracket-Traction
3	100-1270	1	Switch-Proximity
4	112-9420	1	Switch-Engine
5	104-2628	4	Screw-HWH
6	130-0107	1	Control Clutch Cable ASM
7	115-1714	1	Cable-Brake, Squeeze
8	125-5207	1	Squeeze Brake Lever ASM
8:2	27-6250	2	Bushing
9	127-2233-03	1	Bracket-Brake
10	104-8300	2	Nut-HF, NI
11	125-5248	1	Lever-Traction
12	112-9317	1	Bushing-Flanged
13	110-2415	2	Clamp-Handle
14	112-9318	4	Screw-HHF, Locking
15	115-1703	1	Mount-Rear
16	125-5199	1	Console ASM
16:2	115-1720	1	Decal-Lever, Traction
16:3	120-2761	1	Decal-Warning
16:4	93-6085	1	Decal-Throttle
16:5	120-2727	1	Decal-Brake

Ref.	Part Number	Qty.	Description
17	65-5080	1	Bushing-Flange
18	115-1130	1	Decal-Console
19	323-34	2	Screw-HH
20	3253-21	2	Washer-Lock
21	3256-24	2	Washer-Flat
22	110-7364	2	Pin-Handle, Pivot
23	3296-28	2	Nut-Lock, NI
24	104-9760	1	Knob-Black
25	120-2713	1	Handle
26	3296-56	2	Nut-Lock, NI
27	3256-22	2	Washer-Flat
28	66-2921	2	Washer-Friction
29	120-2709	1	Cable-Throttle
30	94-5780	2	Screw-HWH
31	3290-378	4	Tie-Cable
32	321-8	1	Screw-HH
33	104-2065	2	Screw-HWH
35	104-7201	3	Nut-HF
36	3-5787	1	Spring-Compression
37	3256-3	1	Washer-Flat
38	115-1699	1	Screw-Shoulder

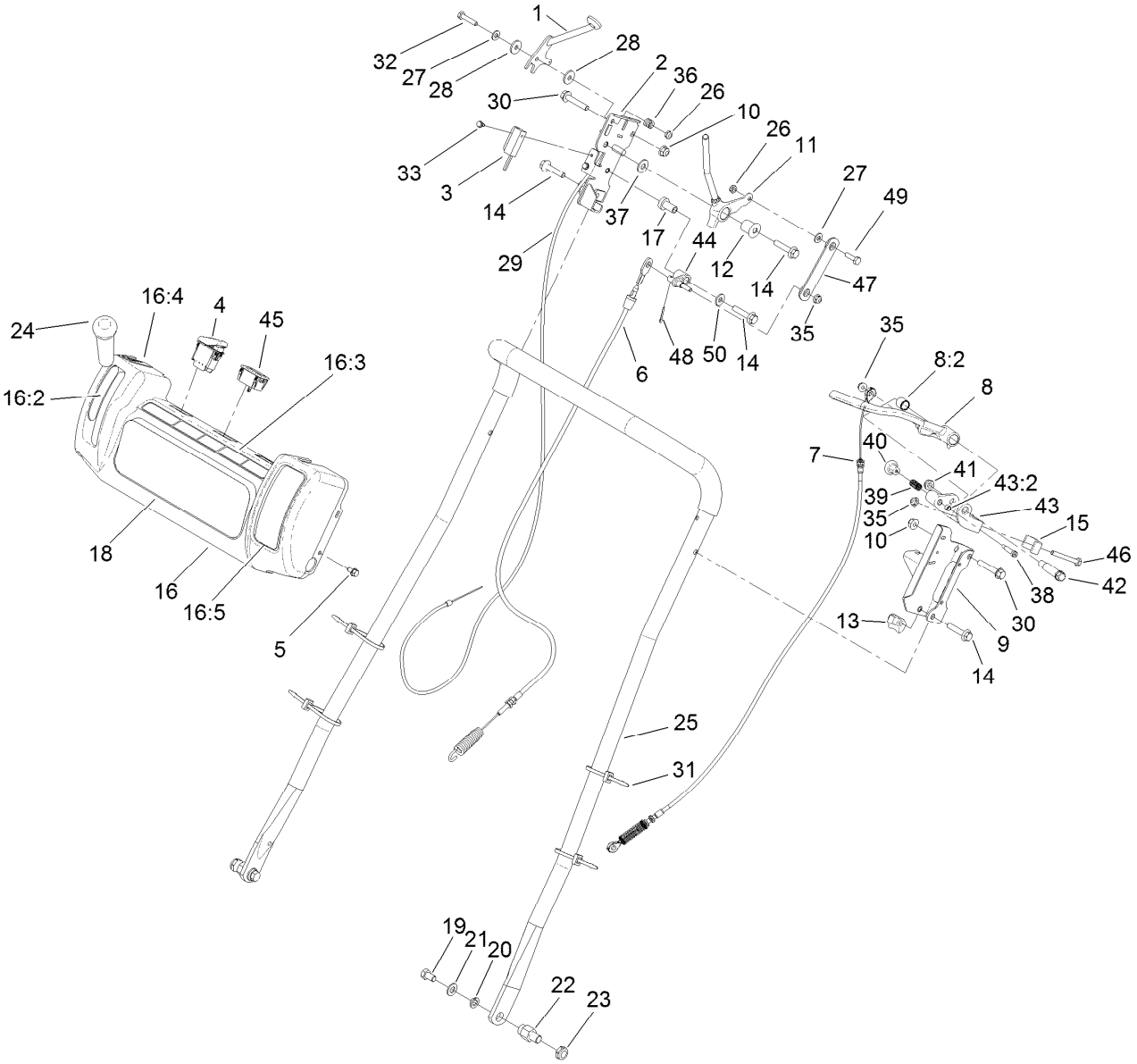

Handle Assembly (continued)

Ref.	Part Number	Qty.	Description
39	107-8885	1	Spring-Compression
40	115-1688	1	Arm-Lock, Brake
41	3296-59	1	Nut-Lock, NI
42	115-1116	1	Screw-Shoulder
43	115-1704	1	Front Mount ASM
43:2	256-112	1	Bushing
44	130-0114	1	Pivot-Traction

Ref.	Part Number	Qty.	Description
45	119-1347	1	Meter-Hour
46	321-11	1	Screw-HH
47	132-9579	1	Linkage-Traction
48	3272-6	1	Pin-Cotter
49	321-5	1	Screw-HH
50	120-9646	1	Washer-Flat

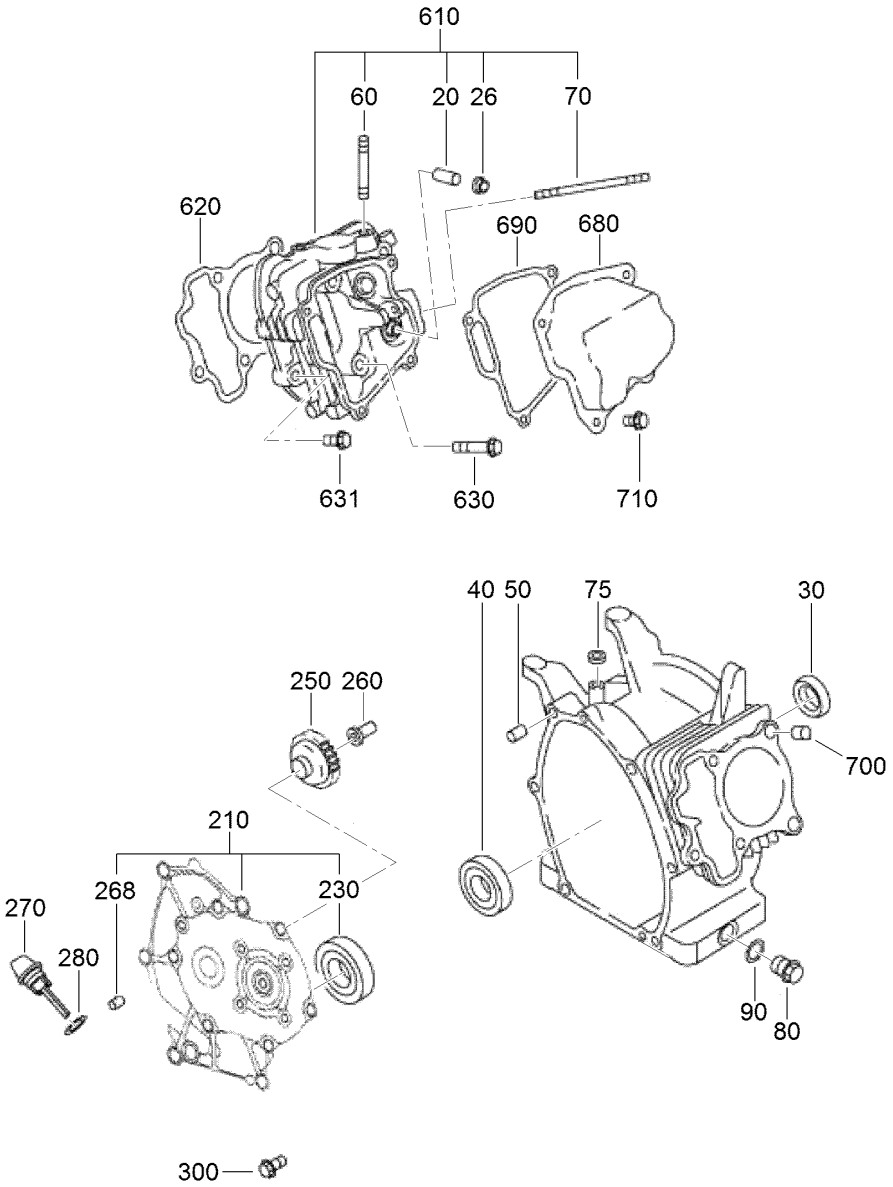

Crankcase Assembly

Ref.	Part Number	Qty.	Description
20	121-0571	2	Guide-Valve
26	121-0611	1	Seal-Stem
30	121-0540	1	Seal-Oil
40	121-0546	1	Bearing-Ball
50	121-0608	2	Pipe-Knock
60	121-0512	2	Stud
70	121-0511	2	Stud
75	121-0539	1	Seal-Oil
80	121-0538	1	Plug
90	121-0532	1	Gasket
210	121-0607	1	Main Bearing Cover ASM
230	121-0544	1	Bearing-Ball
250	121-0652	1	Governor Gear ASM
260	121-0641	1	Sleeve-Governor
268	121-6351	2	Pin-Straight

Ref.	Part Number	Qty.	Description
270	121-0665	1	Gauge-Oil
280	121-6374	1	Gasket
300	121-0502	6	Bolt-Flange
610	121-0672	1	Cylinder Head ASM (Serial No. 1Xxxxxxx)
610	125-9159	1	Cylinder Head ASM (Serial No. 2Xxxxxxx)
620	121-0585	1	Gasket-Head
630	121-0519	4	Bolt-Flange
631	121-0520	1	Bolt-Flange
680	121-0609	1	Rocker Cover ASM
690	121-0610	1	Gasket-Cover, Rocker
700	121-0608	2	Pipe-Knock
710	121-0514	4	Bolt-Flange
960	121-0606	1	Gasket Set ●

● Not illustrated

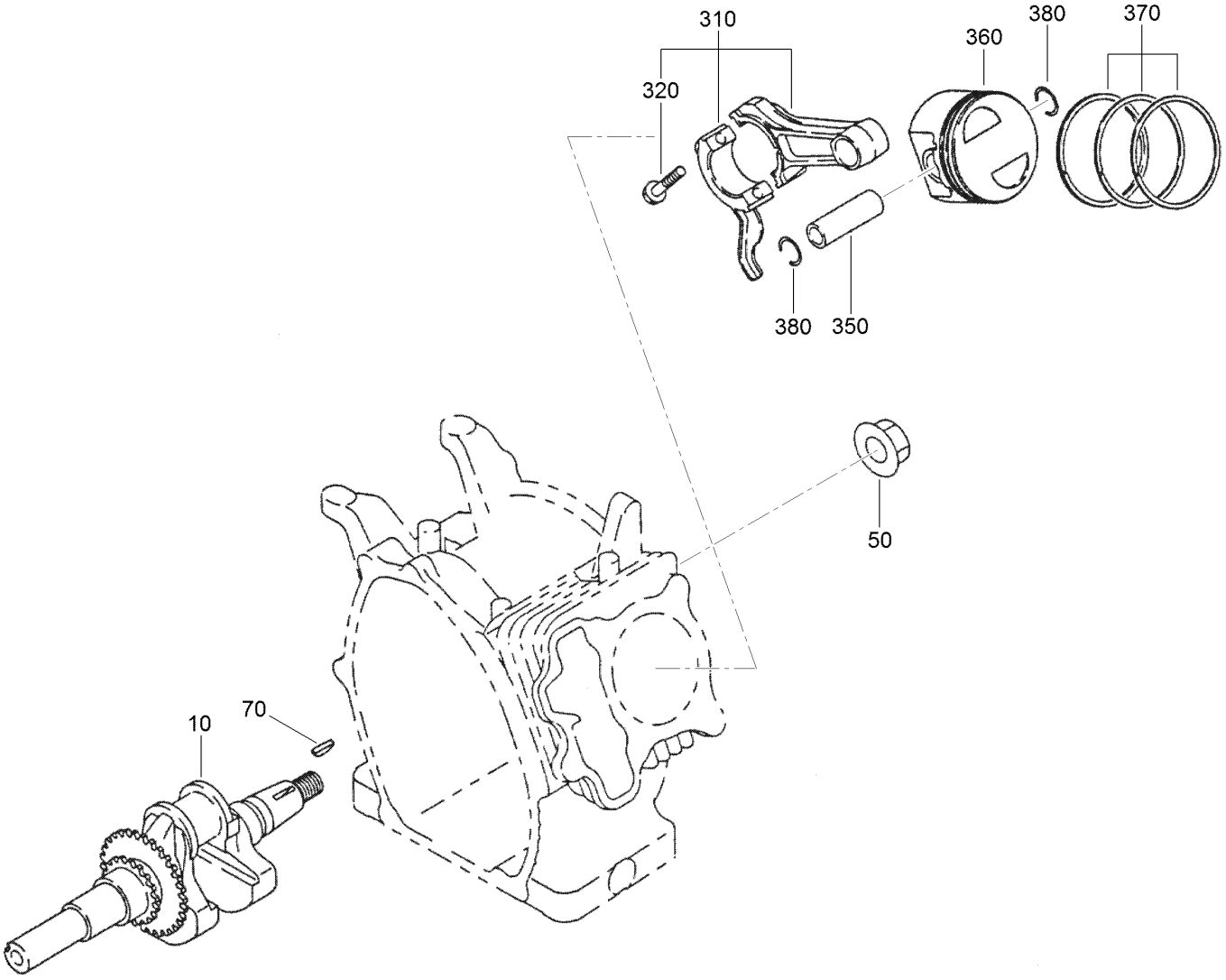

Crankshaft and Piston Assembly

Ref.	Part Number	Qty.	Description
10	121-0586	1	Crankshaft ASM
50	121-0529	1	Nut-Flange
70	121-0537	1	Key-Woodruff
310	121-0587	1	Connecting Rod ASM
310	121-0588	1	Connecting Rod ASM (Undersize)
320	121-0612	2	Bolt-Rod, Connecting
350	121-0589	1	Pin-Piston
360	121-6353	1	Piston (Oversize 0.50 Mm)
360	121-0590	1	Piston (STD)
360	121-0591	1	Piston (Oversize 0.250 Mm)
370	121-0592	1	Piston Ring Set (STD)
370	121-0593	1	Piston Ring Set (Oversize 0.250 Mm)
370	121-0594	1	Piston Ring Set (Oversize 0.50 Mm)
380	121-0561	2	Clip

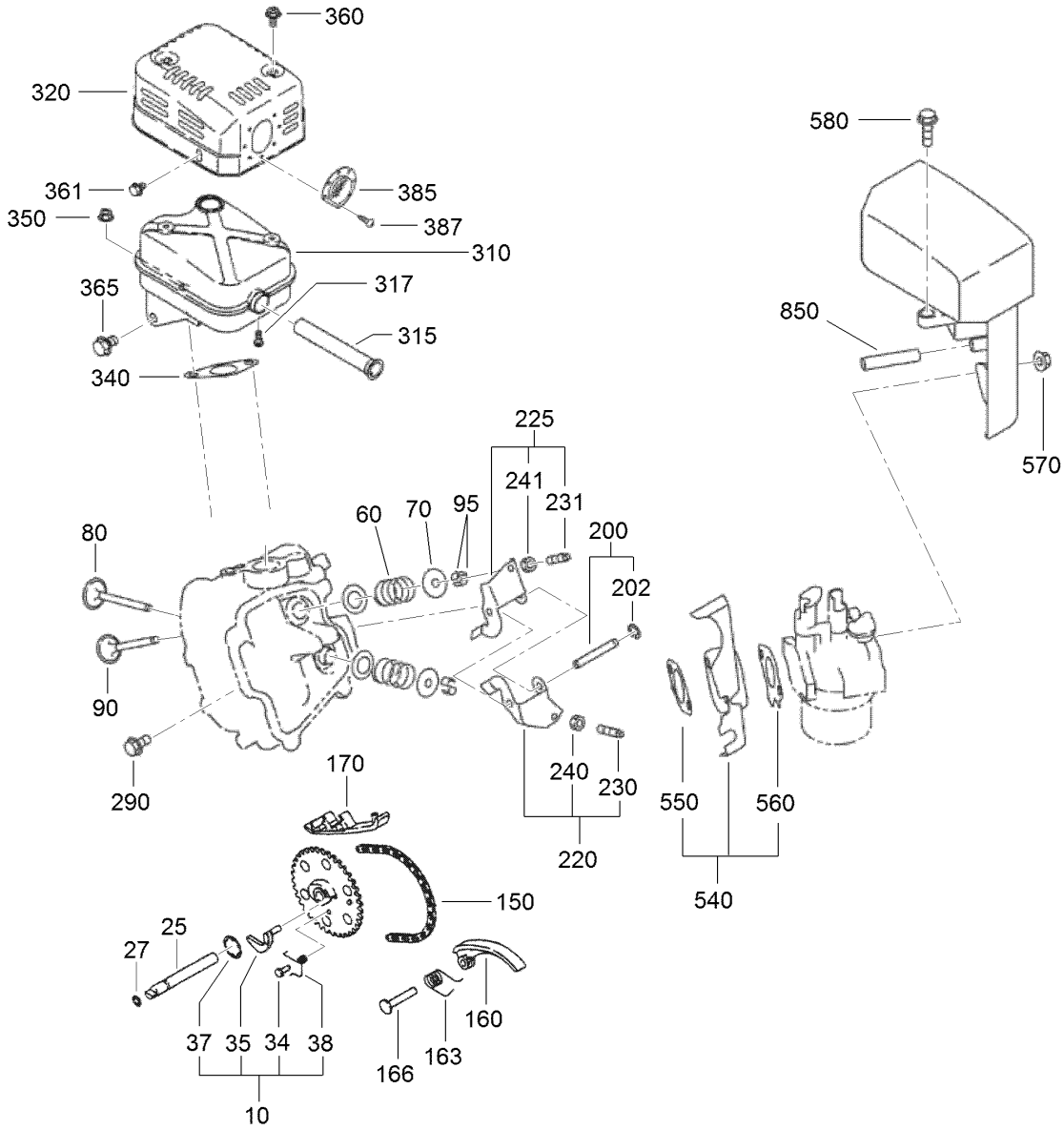

Intake and Exhaust Assembly

Ref.	Part Number	Qty.	Description
10	121-0613	1	Camshaft ASM
25	121-0625	1	Pin-Camshaft
27	121-0535	1	O-Ring
34	121-0639	1	Pin-Spring
35	121-0631	1	Lever-Release
37	121-0632	1	Clip
38	121-0640	1	Spring-Return
60	121-0673	2	Spring-Valve
70	121-0579	2	Retainer-Spring
80	121-0596	1	Valve-Intake
90	121-0597	1	Valve-Exhaust
95	121-0555	4	Collet-Valve
150	121-0599	1	Timing Chain ASM
160	121-0634	1	Tensioner
163	121-0637	1	Spring-Tensioner
166	121-0633	1	Pin-Tensioner
170	121-0635	1	Guide-Chain
200	121-0624	1	Rocker Pin ASM
202	121-0507	1	Clip
220	121-0629	1	Intake Rocker Arm ASM
225	121-0630	1	Exhaust Rocker Arm ASM

Ref.	Part Number	Qty.	Description
230	121-0524	1	Screw-Adjust
231	121-0524	1	Screw-Adjust
240	121-0528	1	Nut
241	121-0528	1	Nut
290	121-0514	1	Bolt-Flange
310	121-0595	1	Muffler ASM
315	121-0638	1	Arrestor-Spark
317	121-0525	1	Screw-Tapping
320	121-0598	1	Muffler Cover ASM
340	121-0626	1	Gasket-Muffler
350	121-6376	2	Nut-Flange
360	121-0527	2	Bolt-Flange
361	121-0513	1	Bolt-Flange
365	121-0521	1	Bolt-Flange
385	121-6354	1	Screen-Complete
387	121-0525	2	Screw-Tapping
540	121-0623	1	Insulator ASM
550	121-0628	1	Gasket-Insulator No.2
560	121-0627	1	Gasket-Insulator No.1
570	121-0506	2	Nut-Flange

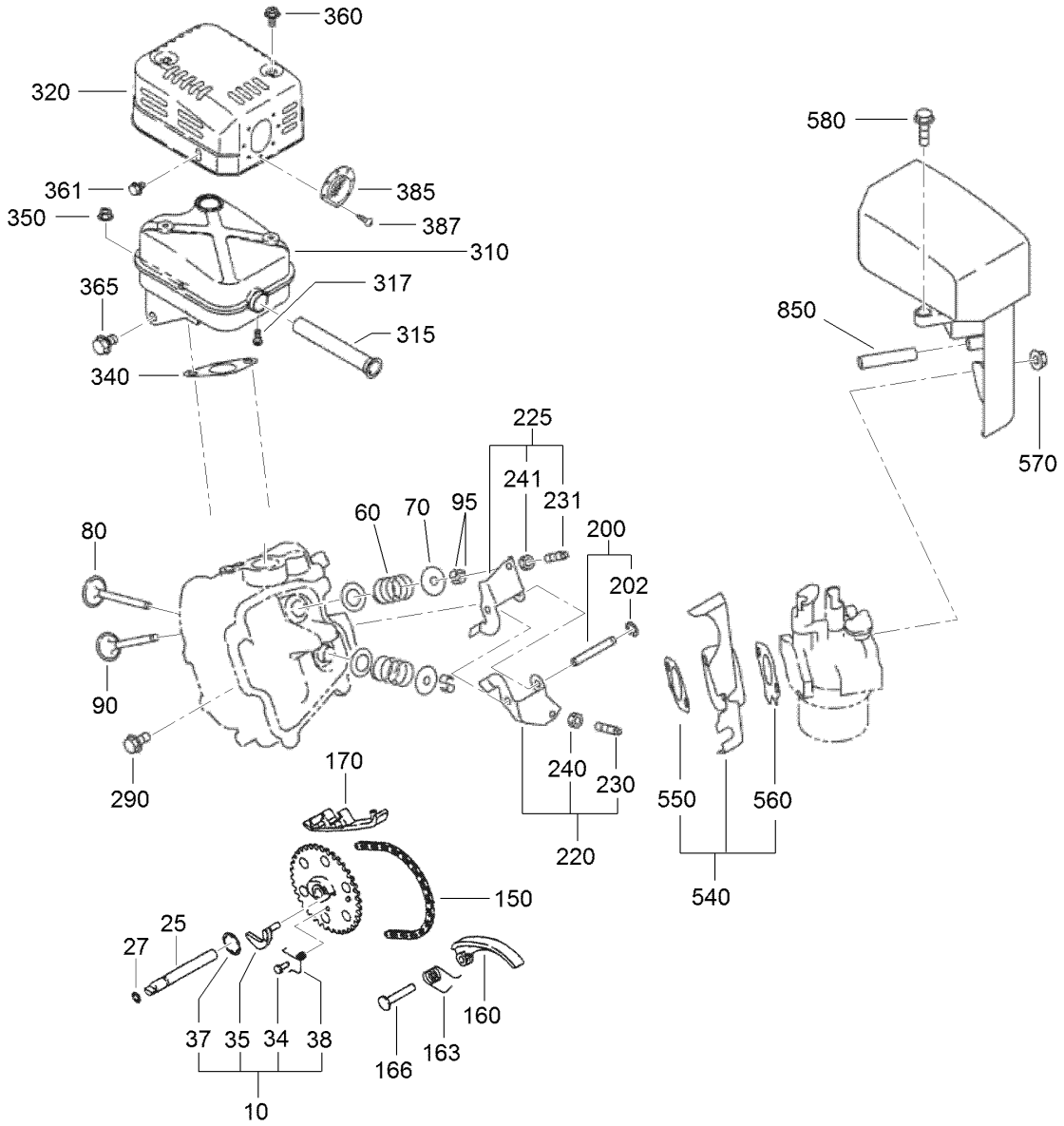

Intake and Exhaust Assembly (continued)

Ref.	*Part Number*	*Qty.*	*Description*
580	121-0516	1	Bolt-Flange
850	121-6375	1	Pipe-Breather

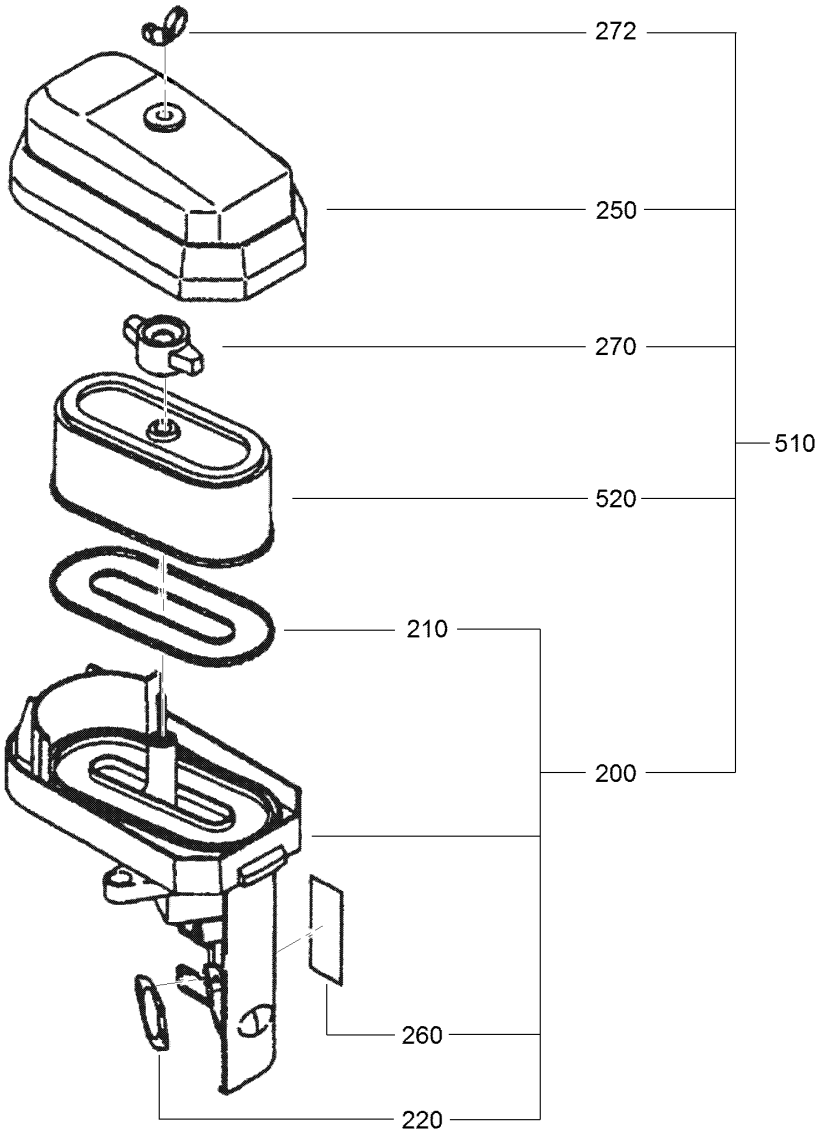

Air Cleaner Assembly

Ref.	*Part Number*	*Qty.*	*Description*
200	121-0620	1	Base ASM
210	121-0617	1	Packing
220	121-0614	1	Packing
250	121-0621	1	Cover ASM
260	121-0616	1	Label
270	121-0622	1	Nut-Wing
272	121-0615	1	Nut-Wing
510	121-0619	1	Air Cleaner ASM
520	121-0618	1	Set-Element

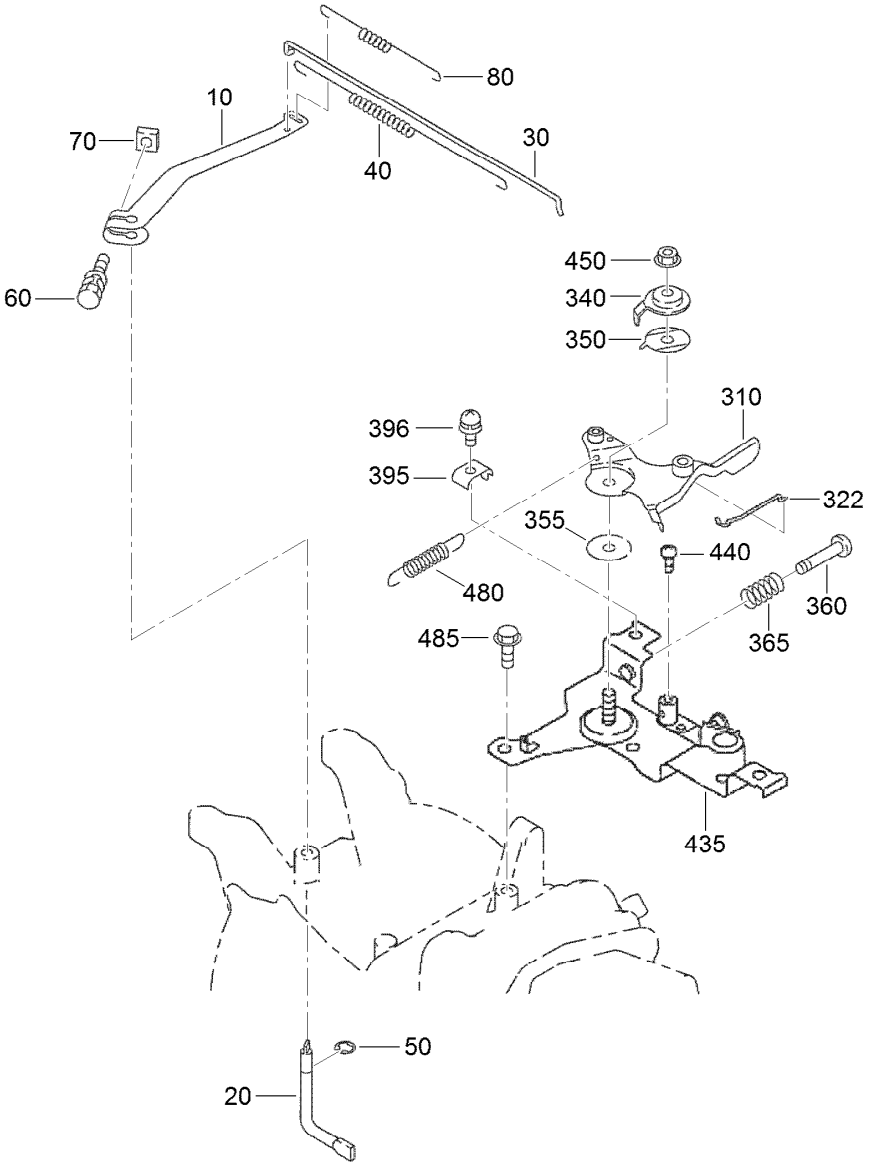

Governor Assembly

Ref.	Part Number	Qty.	Description
10	121-0643	1	Lever-Governor
20	121-0642	1	Shaft-Governor
30	121-0674	1	Governor Rod ASM
40	121-0645	1	Spring-Rod
50	121-0507	1	Clip
60	121-0522	1	Bolt And Washer ASM
70	121-0530	1	Nut
80	121-0644	1	Spring-Governor
310	121-0646	1	Speed Control Lever ASM
322	121-0648	1	Link Rod ASM
340	121-0647	1	Plate-Stop

Ref.	Part Number	Qty.	Description
350	121-0651	1	Washer
355	121-0534	1	Washer-Friction
360	121-0509	1	Screw
365	121-0572	1	Spring-Adjust
395	121-0650	1	Clamp
396	121-0523	1	Screw And Washer ASM
435	121-0654	1	Speed Control Bracket ASM
440	121-0508	1	Screw
450	121-0505	1	Nut-Self Lock
480	121-0653	1	Spring-Return
485	121-0514	2	Bolt-Flange

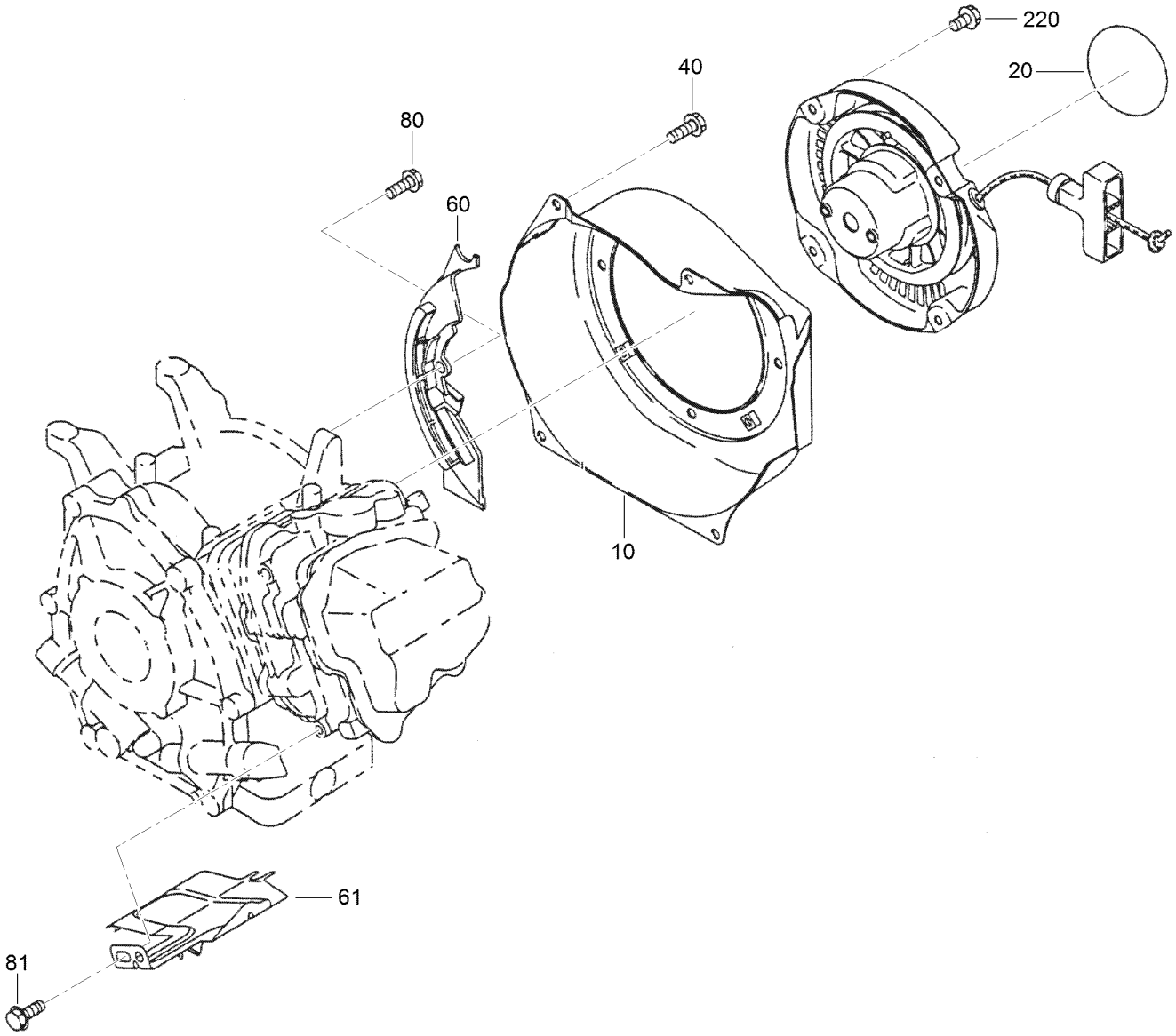

Recoil and Shroud Assembly

Ref.	Part Number	Qty.	Description
10	121-0600	1	Blower Housing ASM
20	121-0550	1	Label-Trademark
40	121-0515	4	Bolt-Flange
60	121-0656	1	Case Baffle No.1 ASM
61	121-0655	1	Case Baffle No.2 ASM
80	121-0500	1	Bolt-Flange
81	121-0514	1	Bolt-Flange
220	121-6377	4	Bolt And Washer ASM

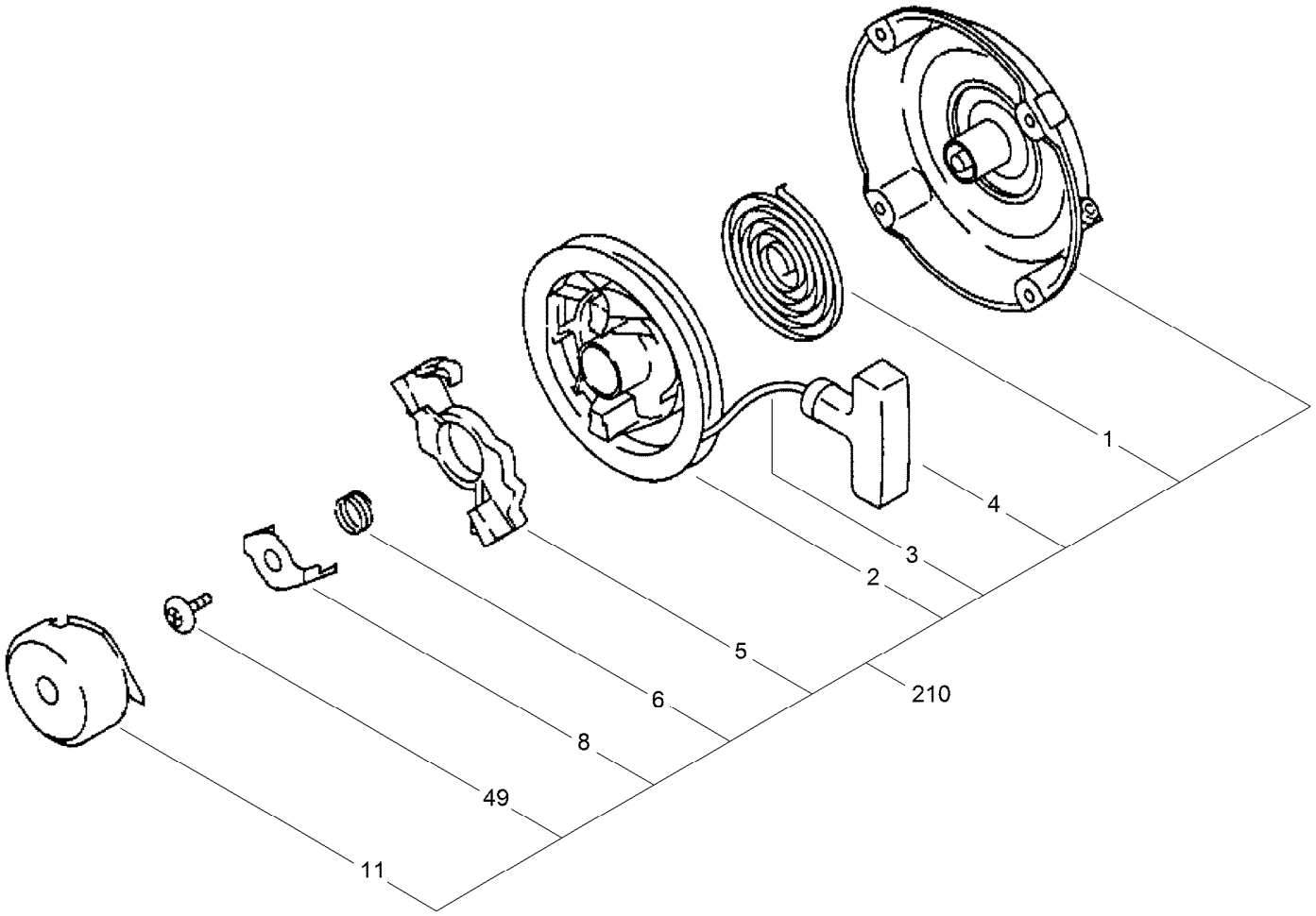

Recoil Assembly

Ref.	*Part Number*	*Qty.*	*Description*
1	133-8872	1	Subaru Recoil Kit
2	121-6357	1	Reel
3	121-0676	1	Starter Rope
4	121-6358	1	Handle-Starter
5	121-6359	1	Ratchet
6	121-6360	1	Spring-Friction
8	121-6361	1	Plate-Friction
11	121-6362	1	Pulley-Starter
49	121-6363	1	Screw-Center
210	133-8897	1	Recoil Starter ASM

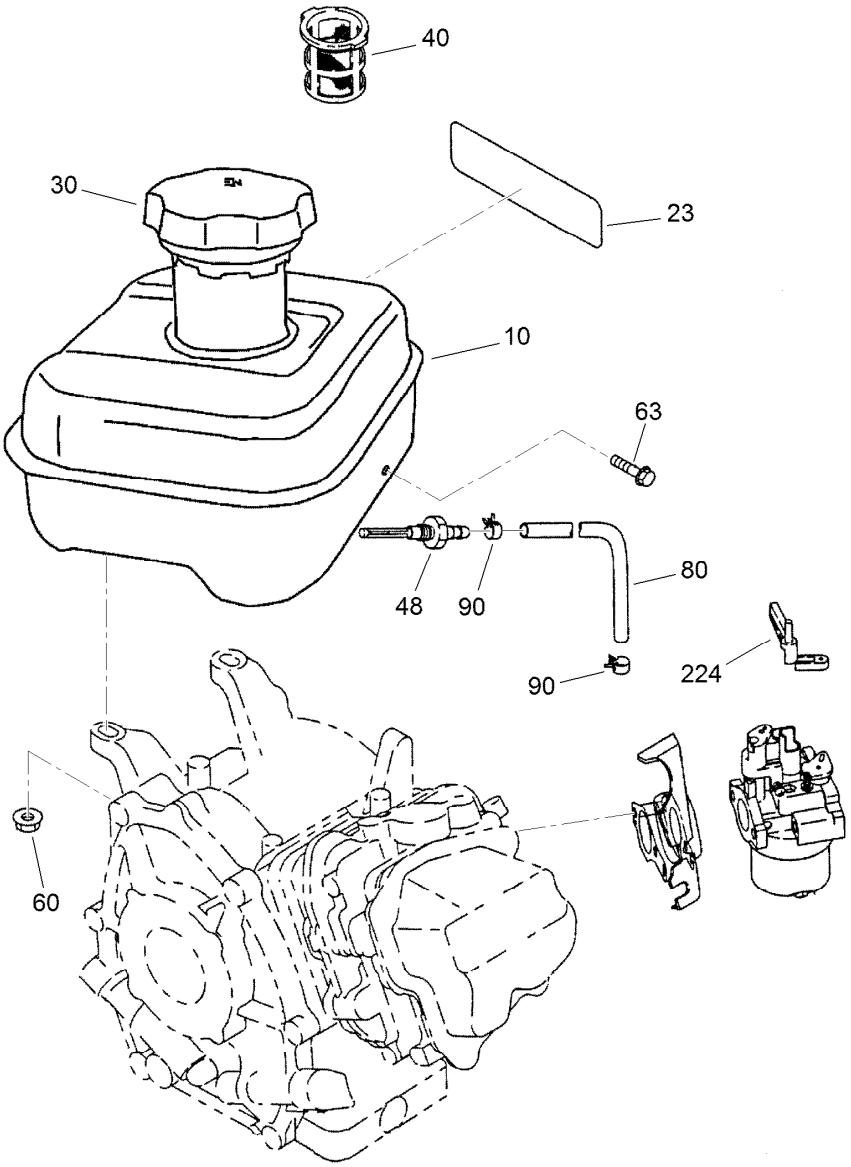

Fuel Tank Assembly

Ref.	Part Number	Qty.	Description
10	125-5241	1	Tank-Fuel
23	121-0605	1	Label-Model
30	121-0684	1	Fuel Tank Cap ASM
40	121-0685	1	Filter-Fuel
48	121-0542	1	Union
60	121-0506	2	Nut-Flange
63	121-0517	1	Bolt-Flange
80	121-6378	1	Pipe-Rubber
90	121-0543	2	Clamp-Hose
224	121-0649	1	Lever-Control, Choke

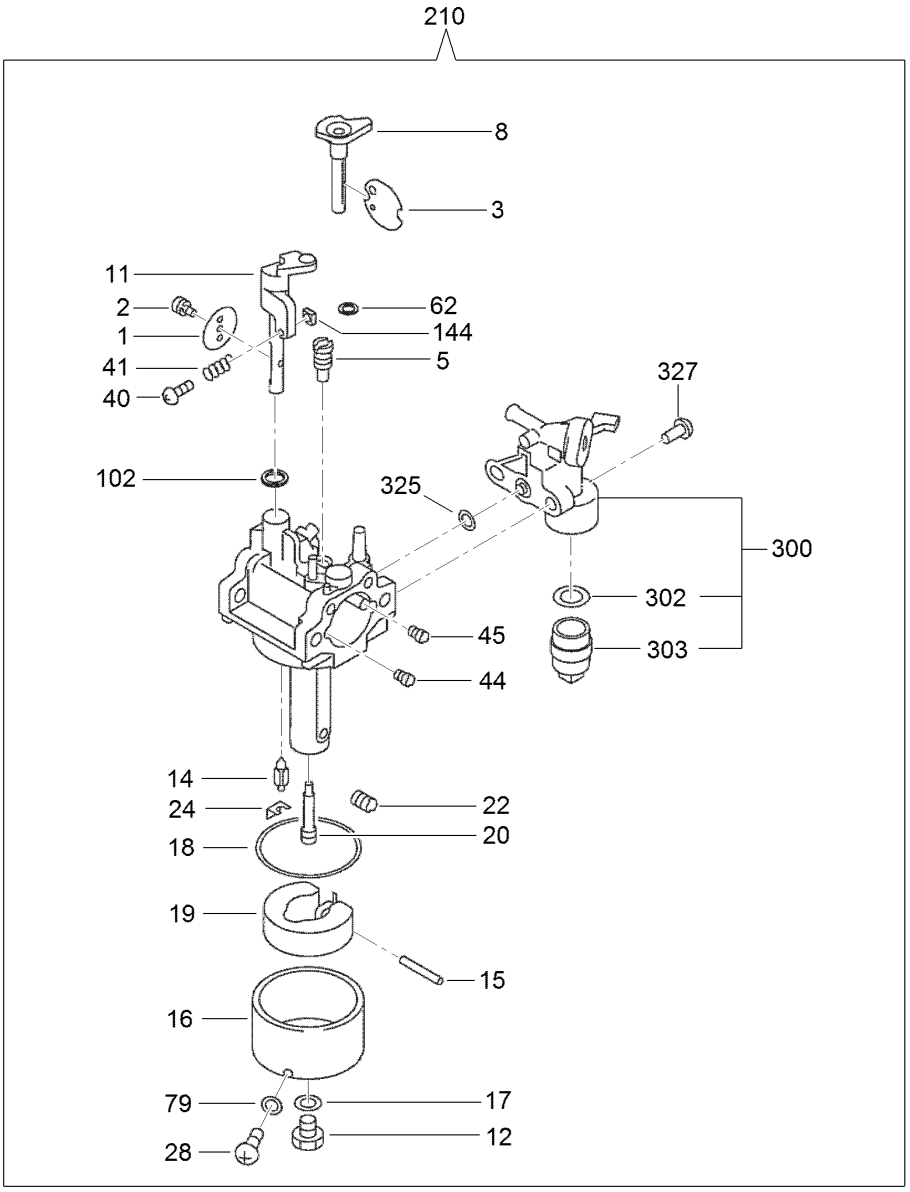

Carburetor Assembly

Ref.	Part Number	Qty.	Description
1	121-0553	1	Valve-Throttle
2	121-0558	1	Screw
3	121-0662	1	Valve-Choke
5	121-0574	1	Jet-Pilot
8	121-0661	1	Lever-Choke
11	121-0602	1	Throttle Shaft ASM
12	121-0568	1	Bolt
14	121-6366	1	Needle
15	121-0660	1	Pin
16	121-0659	1	Float Body ASM
17	121-0559	1	Packing
18	121-0560	1	Packing-Chamber
19	121-0562	1	Float
20	121-0601	1	Nozzle-Main
22	121-0575	1	Jet-Main
24	121-0563	1	Clip

Ref.	Part Number	Qty.	Description
28	121-0567	1	Bolt
40	121-0554	1	Screw
41	121-0677	1	Spring
44	121-0557	1	Jet-Air
45	121-0552	1	Jet-Air, Pilot
62	121-0570	1	Seal
79	121-0569	1	Packing
102	121-0573	1	Seal
144	121-0664	1	Nut
210	121-6365	1	Carburetor ASM
300	121-0675	1	Fuel Strainer ASM
302	121-0658	1	Packing
303	121-0657	1	Cup
325	121-0663	1	O-Ring
327	121-0556	2	Screw

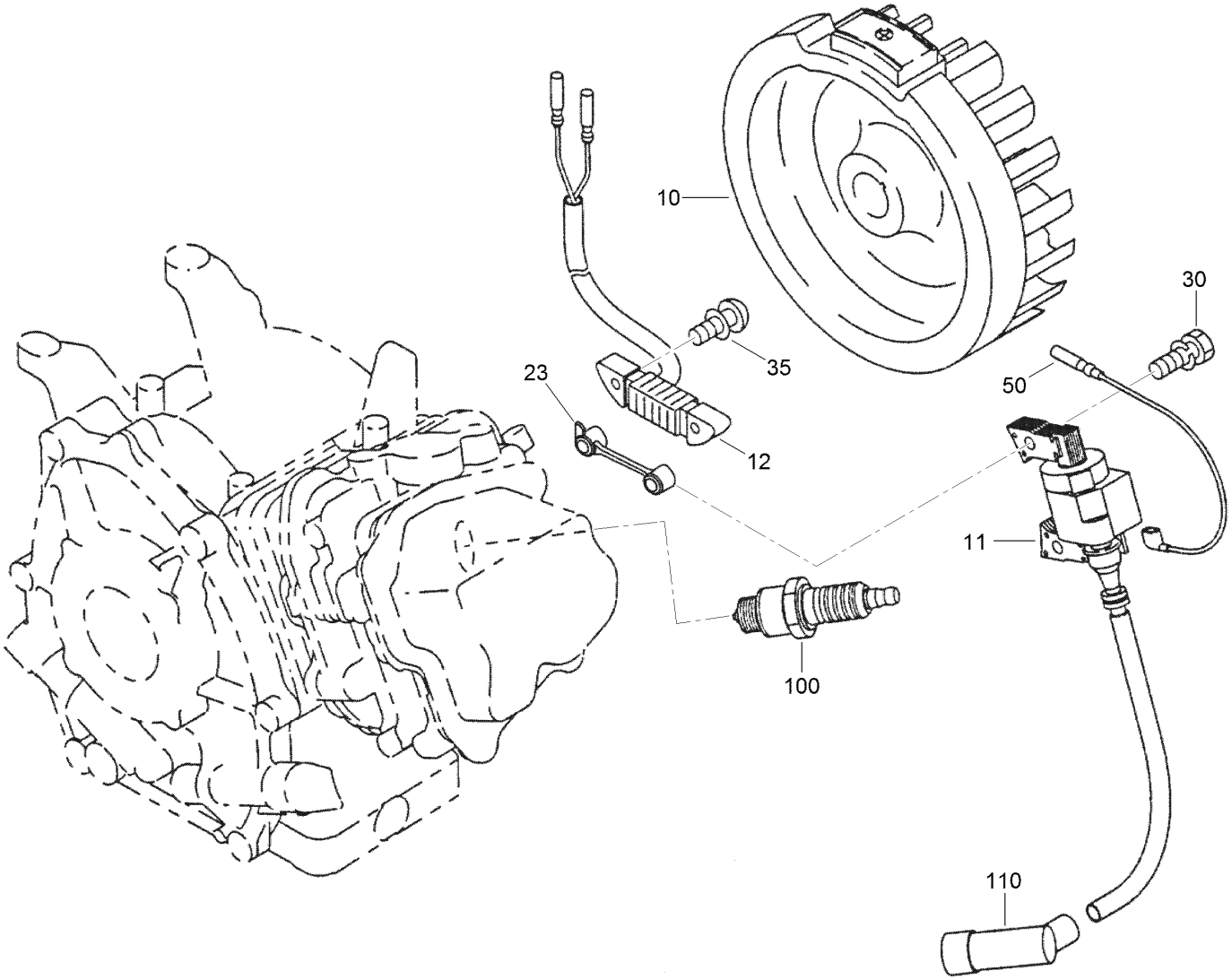

Flywheel and Coil Assembly

Ref.	*Part Number*	*Qty.*	*Description*
10	121-0604	1	Flywheel ASM
11	121-0668	1	Ignition Coil ASM
12	121-6368	1	Lamp Coil ASM
23	121-0669	1	Spacer
30	121-0504	2	Bolt And Washer ASM
35	121-6369	2	Bolt And Washer ASM
50	121-6370	1	Wire-Coil
100	121-0547	1	Plug-Spark
110	133-8849	1	Sparkplug Cap And Boots ASM

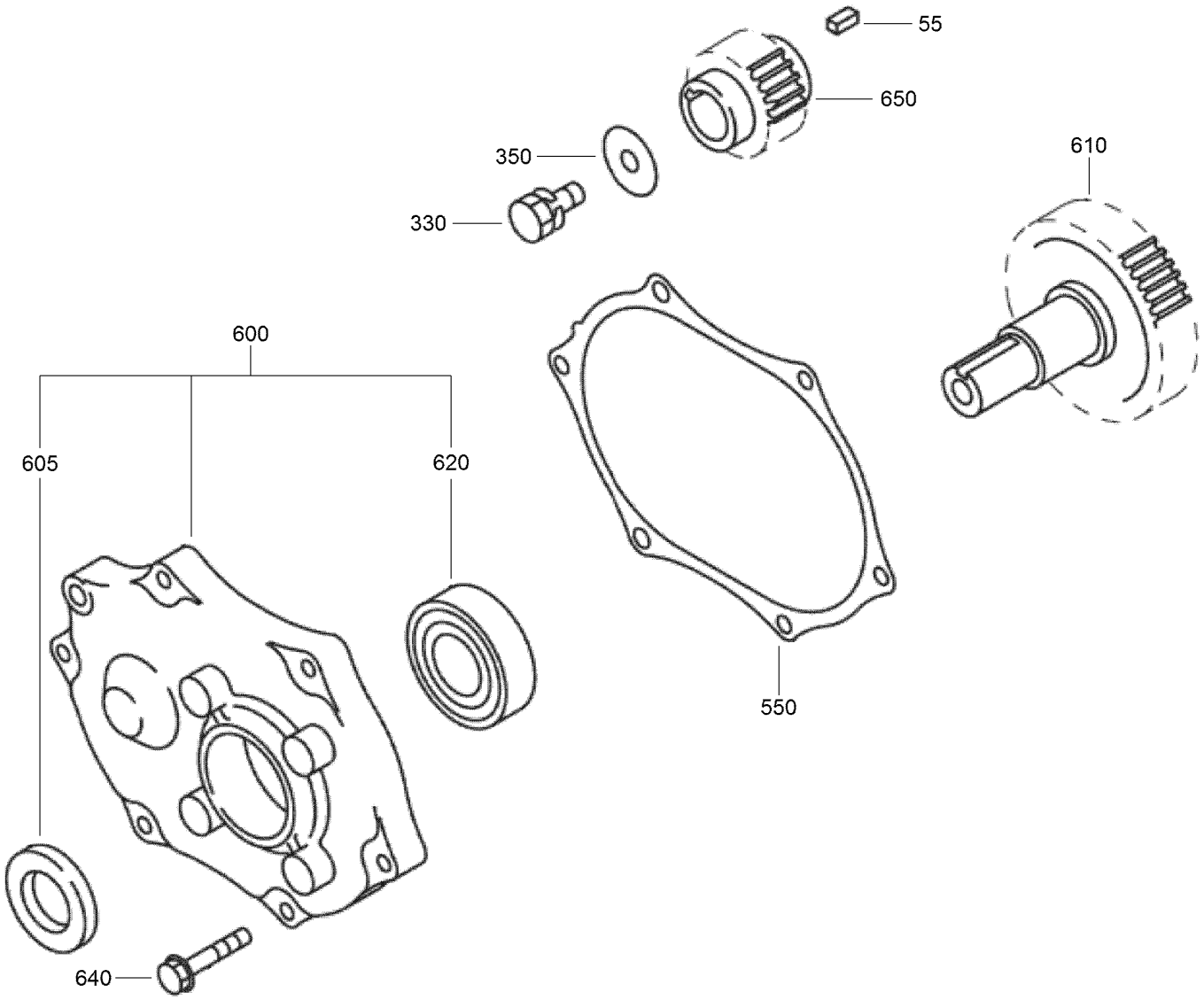

Gear Reduction Assembly

Ref.	*Part Number*	*Qty.*	*Description*
55	121-0536	1	Key
330	121-0501	1	Bolt-Flange
350	121-0531	1	Washer
550	121-0671	1	Gasket-Cover, Reduction
600	121-0670	1	Reduction Cover ASM
605	121-0541	1	Seal-Oil
610	121-6372	1	Shaft-Driving
620	121-0545	1	Bearing-Ball
640	121-0518	6	Bolt-Flange
650	121-6373	1	Shaft-Driven

Attachments and Accessories

For 04055 Greensmaster 1000 Mower

Product Name	Model/Part
LED Light Kit, Serial Number 400000000 and After Greensmaster 800, 1000 and 1600 Series Mower	04063
21in Twin Tip Groomer Reel	04802
Brush-Groomer	105-9640
Premium Engine Oil 10w30 (55 Gal)	121-6392
Premium Engine Oil 10w30 (5 Gallon Pail)	121-6393
Blade-Groomer, Universal Harden Blade (Thin)	132-4626
Full Roller ASM (21in)	104-2642
Swaged Roller ASM	52-3590
Auxiliary Roller Kit	65-8560
Cast Iron Wiehle Roller (Qty 1)	71-1550
Wiehle Roller ASM (.43in Spacing)	88-6790
Wiehle Roller ASM (2.5in Dia)	93-9045
Wiehle Roller Asm (.20in Spacing)	99-6241
Smooth Scraper Kit	112-9285
Scraper Brush Kit	112-9286
Comb Scraper Kit	112-9287
Wide Wiehle Scraper Kit	112-9288
Narrow Wiehle Scraper Kit	112-9289
Groomer Drive System	04134
Forward-Rotating Kit	125-3451
21in Soft Grooming Brush	04270
21in Stiff Grooming Brush	04271
21in Spring Steel Groomer Reel	04283
21in Carbide Groomer Reel	04284
21in Brush Groomer Reel	04285
21in Thin Blade Groomer Reel	04741
21in Soft Grooming Brush Kit	127-1547
21in Stiff Grooming Brush Kit	127-1548
Bedbar-Aggressive	112-9279-03
Bedbar-Standard	112-9281-01
Bedknife-Tournament, Extended	108-4302
Bedknife-Microcut, Extended	108-4303
Bedknife-Edgemax (21in Fairway)	112-7475
Bedknife-Edgemax, Microcut	115-1880
Bedknife-Edgemax, Tournament Cut	115-1881
Bedknife-Fairway	63-8600
Bedknife-Microcut	93-4262
Bedknife-Tournament Cut	93-4263
Bedknife-Low Cut	93-4264
Bedknife-Highcut	94-6392
14 Blade Reel ASM	117-1449
11 Blade Reel Asm	131-2036
Blade-Groomer, Helix	110-2333
Blade-Groomer, Thin (Carbide)	121-9531
Dethatcher Kit- Dynablade	04109

Attachments and Accessories (continued)

Wheel Kit	04123
Out-Front Brush Kit	04266
Operator Presence Kit	112-9282
16-Tooth Traction Pulley Kit	115-1886
Hourmeter-Wireless	115-4754
High Altitude Jet-Subaru	117-0073
.25in Clip Kit	65-9000
Roller Rebuild Kit	107-1588
Spark Plug	121-0547
Element Set	121-0618
Filter-Fuel	121-0685
MVP Filter and Spark Plug Kit, 2012 and After Walk-Behind Greensmaster Mower	30097
Turf Evaluator	04399
Toro Reel Paper (10 Pack)	125-5610
Toro Reel Shim (0.002in)	125-5611
Angle Indicator	131-6828
Angle Indicator Mount	131-6829
Height-of-Cut Bar	94-9010
Trans Pro 80 Tow-Behind Trailer	04238
Trans Pro 100 Tow-Behind Trailer	04240
Flat Ramp	04245
Rail Ramp Kit (Update)	04247
Rail Ramp Conversion Kit (Update)	04248

Notes:

Notes:

Notes:

TORO®

Count on it.