FORM NO. 3321–613

TORO®

PART NO. 99–5151

PARTS CATALOG

KIT – 62" BAFFLE

FOR MODEL NO. 30564, 30162 & 30551 CUTTING UNITS

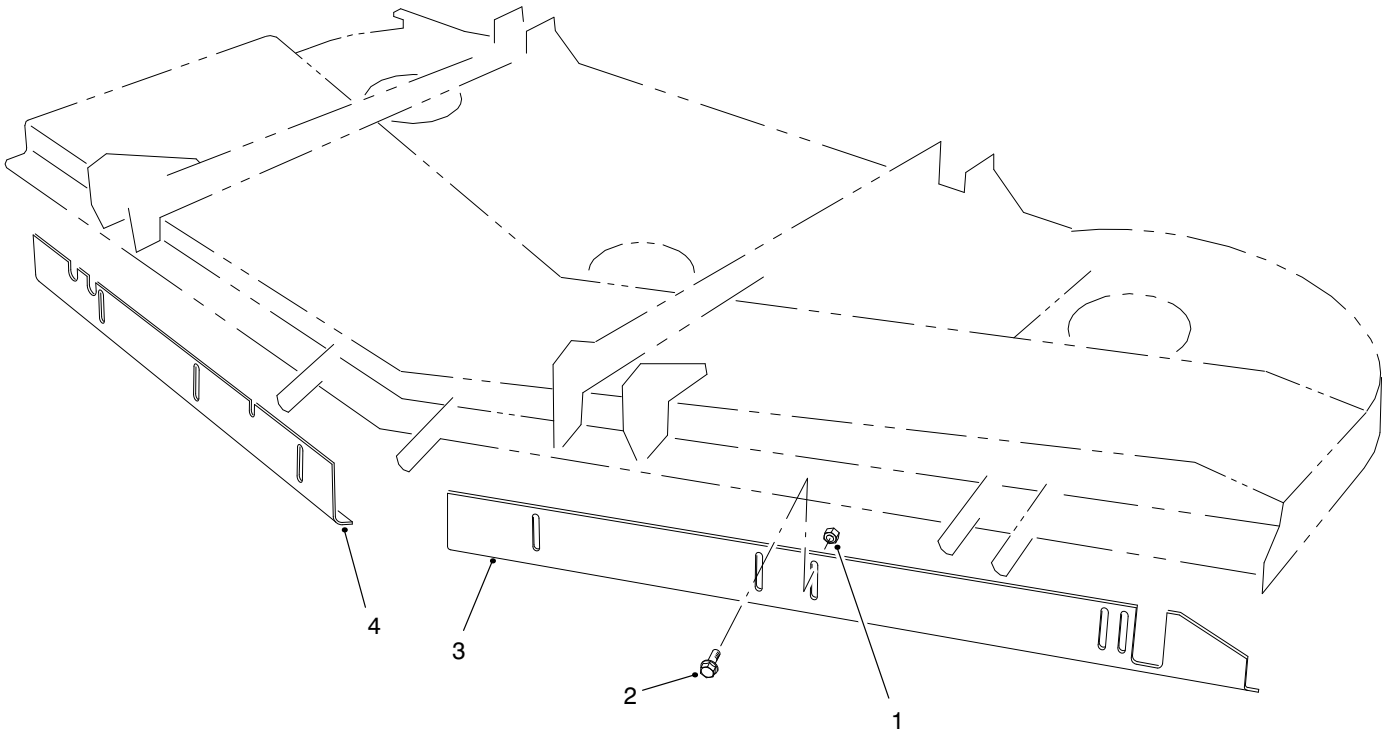

T–1212–1

BAFFLE KIT ASM

Ref. No.	Part No.	Description	No. Used
1	32128–20	Nut–Flange	6
2	3234–5	Screw–HHF	6
3	99–5152	Baffle–Front, LH	1
4	82–8820	Baffle–Front, RH	1

© The TORO Company – 1998
All Rights Reserved

TPS