Form No. 3420-652 Rev D

TORO®

Count on it.

Operator's Manual

TX 1000 Compact Tool Carrier

Model No. 22327—Serial No. 401900000 and Up
Model No. 22327G—Serial No. 401900000 and Up
Model No. 22327HD—Serial No. 401900000 and Up
Model No. 22328—Serial No. 402000000 and Up
Model No. 22328HD—Serial No. 402000000 and Up

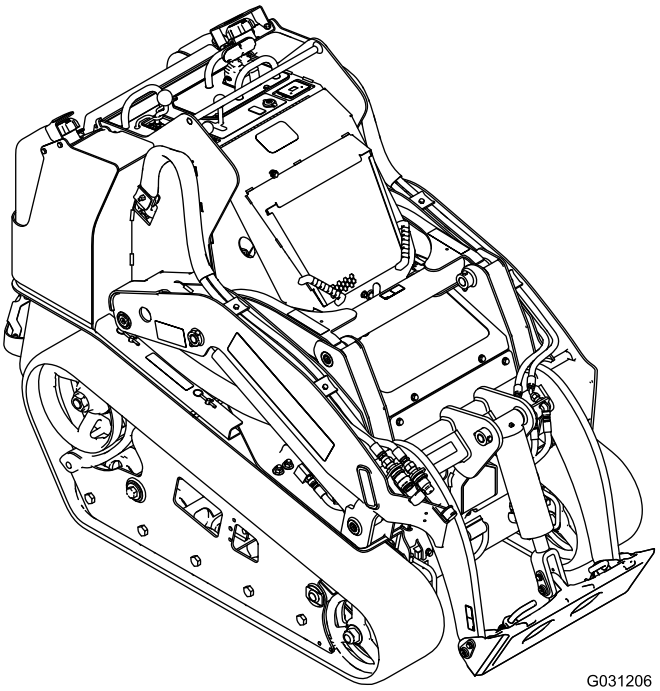

G031206

Register at www.Toro.com.
Original Instructions (EN)

CE

3420-652 D

This product complies with all relevant European directives; for details, please see the separate product specific Declaration of Conformity (DOC) sheet.

It is a violation of California Public Resource Code Section 4442 or 4443 to use or operate the engine on any forest-covered, brush-covered, or grass-covered land unless the engine is equipped with a spark arrester, as defined in Section 4442, maintained in effective working order or the engine is constructed, equipped, and maintained for the prevention of fire.

The enclosed engine owner's manual is supplied for information regarding the US Environmental Protection Agency (EPA) and the California Emission Control Regulation of emission systems, maintenance, and warranty. Replacements may be ordered through the engine manufacturer.

⚠ WARNING

CALIFORNIA
Proposition 65 Warning

Diesel engine exhaust and some of its constituents are known to the State of California to cause cancer, birth defects, and other reproductive harm.

Battery posts, terminals, and related accessories contain lead and lead compounds, chemicals known to the State of California to cause cancer and reproductive harm. Wash hands after handling.

Use of this product may cause exposure to chemicals known to the State of California to cause cancer, birth defects, or other reproductive harm.

Introduction

This machine is a compact tool carrier intended for use in various earth and materials moving activities for landscaping and construction work. It is designed to operate a wide variety of attachments each of which perform a specialized function.

Read this information carefully to learn how to operate and maintain your product properly and to avoid injury and product damage. You are responsible for operating the product properly and safely.

You may contact Toro directly at www.Toro.com for product safety and operation training materials, accessory information, help finding a dealer, or to register your product.

Whenever you need service, genuine Toro parts, or additional information, contact an Authorized Service Dealer or Toro Customer Service and have the model and serial numbers of your product ready. Figure 1 identifies the location of the model and serial numbers on the product. Write the numbers in the space provided.

Important: **With your mobile device, you can scan the QR code on the serial number decal (if equipped) to access warranty, parts, and other product information.**

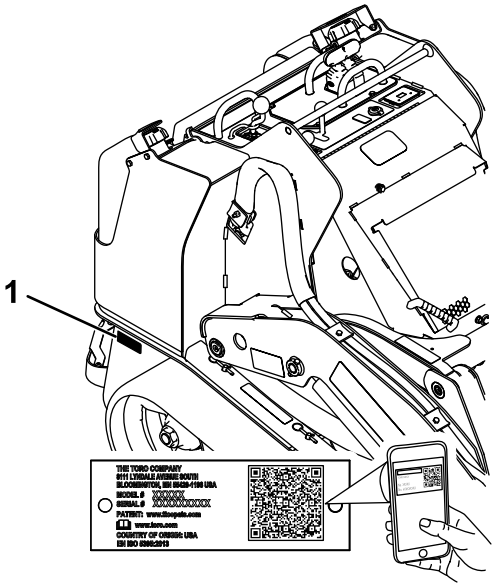

g239557

Figure 1

1. Model and serial number location

Model No. _____

Serial No. _____

This manual identifies potential hazards and has safety messages identified by the safety-alert symbol (Figure 2), which signals a hazard that may cause serious injury or death if you do not follow the recommended precautions.

g000502

Figure 2
Safety-alert symbol

This manual uses 2 words to highlight information. **Important** calls attention to special mechanical

© 2018—The Toro® Company
8111 Lyndale Avenue South
Bloomington, MN 55420

Contact us at www.Toro.com.
Printed in the USA
All Rights Reserved

information and **Note** emphasizes general information worthy of special attention.

Contents

Safety 4
General Safety 4
Safety and Instructional Decals 5
Product Overview 10
Controls 10
Message Display 13
Specifications 14
Attachments/Accessories 14
Before Operation 15
Before Operation Safety 15
Adding Fuel 15
Performing Daily Maintenance 16
During Operation 16
During Operation Safety 16
Starting the Engine 18
Driving the Machine 18
Shutting Off the Engine 18
Using Attachments 18
After Operation 20
After Operation Safety 20
Moving a Non-Functioning Machine 20
Transporting the Machine 21
Lifting the Machine 22
Maintenance 23
Recommended Maintenance Schedule(s) 23
Pre-Maintenance Procedures 24
Maintenance Safety 24
Using the Cylinder Locks 24
Accessing Internal Components 25
Lubrication 27
Greasing the Machine 27
Engine Maintenance 28
Engine Safety 28
Servicing the Air Cleaner 28
Servicing the Engine Oil 29
Fuel System Maintenance 31
Draining the Fuel Filter/Water Separator 31
Replacing the Fuel Filter Canister and In-Line Filter 31
Checking the Fuel Lines and Connections 32
Bleeding the Fuel System 32
Draining the Fuel Tank(s) 32
Electrical System Maintenance 33
Electrical System Safety 33
Servicing the Battery 33
Servicing the Fuses 37
Drive System Maintenance 37
Servicing the Tracks 37
Cooling System Maintenance 40
Cooling System Safety 40
Servicing the Cooling System 40
Brake Maintenance 41
Testing the Parking Brake 41
Controls System Maintenance 42
Adjusting the Controls 42
Hydraulic System Maintenance 42
Hydraulic System Safety 42
Hydraulic Fluid Specifications 42
Checking the Hydraulic-Fluid Level 43
Replacing the Hydraulic Filter 43
Changing the Hydraulic Fluid 44
Cleaning 45
Removing Debris 45
Cleaning the Chassis 45
Storage 46
Storage Safety 46
Storage 46
Troubleshooting 47
Schematics 51

Safety

⚠ DANGER

There may be buried utility lines in the work area. Digging into them may cause a shock or an explosion.

Have the property or work area marked for buried lines and do not dig in marked areas. Contact your local marking service or utility company to have the property marked (for example, in the US, call 811 or in Australia, call 1100 for the nationwide marking service).

General Safety

Always follow all safety instructions to avoid serious injury or death. Using this product for purposes other than its intended use could prove dangerous to you and bystanders.

- Do not carry a load with the arms raised; always carry loads close to the ground.
- Slopes are a major factor related to loss-of-control and tip-over accidents, which can result in severe injury or death. Operating the machine on any slope or uneven terrain requires extra caution.
- Operate the machine up and down slopes with the heavy end of the machine uphill and the load close to the ground. Weight distribution changes with attachments. An empty bucket makes the rear of the machine the heavy end, and a full bucket makes the front of the machine the heavy end. Most other attachments make the front of the machine the heavy end.
- Have the property or work area marked for buried lines and other objects, and do not dig in marked areas.
- Read and understand the content of this *Operator's Manual* before starting the engine.
- Use your full attention while operating the machine. Do not engage in any activity that causes distractions; otherwise, injury or property damage may occur.
- Never allow children or untrained people to operate the machine.
- Keep your hands and feet away from the moving components and attachments.
- Do not operate the machine without the guards and other safety protective devices in place and working on the machine.
- Keep bystanders and pets a safe distance away from the machine.
- Stop the machine, shut off the engine, and remove the key before servicing, fueling, or unclogging the machine.

Improperly using or maintaining this machine can result in injury. To reduce the potential for injury, comply with these safety instructions and always pay attention to the safety-alert symbol (Figure 2), which means Caution, Warning, or Danger—personal safety instruction. Failure to comply with these instructions may result in personal injury or death.

You can find additional safety information where needed throughout this manual.

Safety and Instructional Decals

Safety decals and instructions are easily visible to the operator and are located near any area of potential danger. Replace any decal that is damaged or missing.

Battery Symbols

Some or all of these symbols are on your battery.

1. Explosion hazard
2. No fire, open flame, or smoking
3. Caustic liquid/chemical burn hazard
4. Wear eye protection.
5. Read the *Operator's Manual.*
6. Keep bystanders a safe distance away from the battery.
7. Wear eye protection; explosive gases can cause blindness and other injuries.
8. Battery acid can cause blindness or severe burns.
9. Flush eyes immediately with water and get medical help fast.
10. Contains lead; do not discard

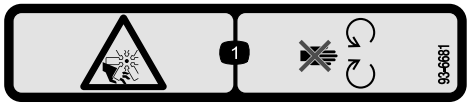

decal93-6681

93-6681

1. Cutting/dismemberment hazard, fan—stay away from moving parts.

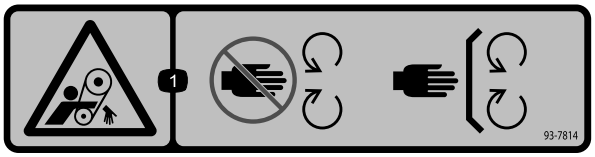

decal93-7814

93-7814

1. Entanglement hazard, belt—stay away from moving parts.

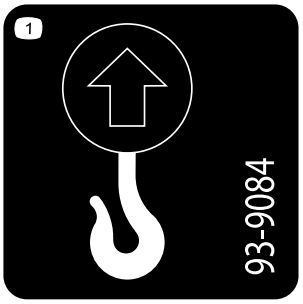

decal93-9084

93-9084

1. Lift point/Tie-down point

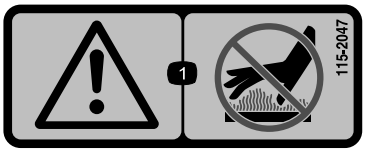

decal115-2047

115-2047

1. Warning—do not touch the hot surface.

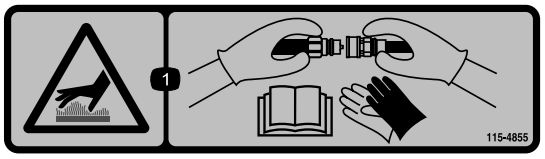

decal115-4855

115-4855

1. Hot surface/burn hazard—wear protective gloves when handling the hydraulic couplers and read the *Operator's Manual* for information on handling hydraulic components.

decal115-4858

115-4858

1. Crushing hazard of hands or feet—install the cylinder lock.

decal115-4865

115-4865

1. Engine coolant
2. Read the *Operator's Manual*.

decal117-3276

117-3276

1. Engine coolant under pressure
2. Explosion hazard—read the *Operator's Manual*.
3. Warning—do not touch the hot surface.
4. Warning—read the *Operator's Manual*.

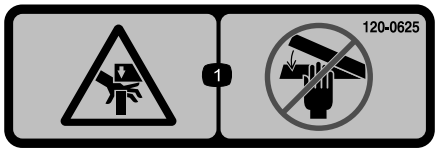

decal120-0625

120-0625

1. Pinch point, hand—keep hands away.

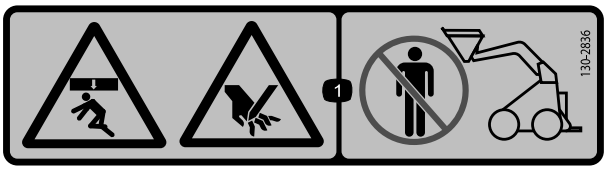

decal130-2836

130-2836

1. Crushing hazard; cutting hazard—keep away from the bucket and the lift arm.

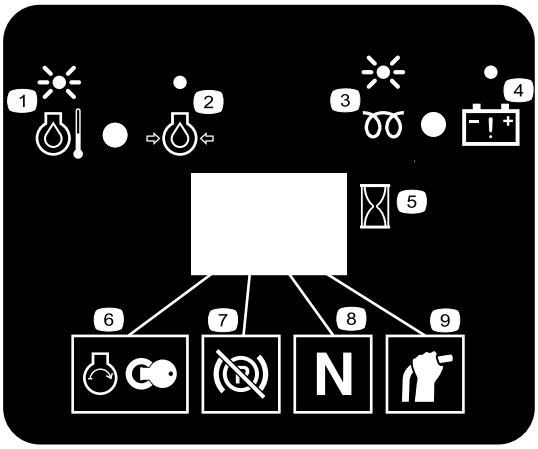

decal130-7637

130-7637

1. Blinking light—engine-coolant temperature
2. Steady light—engine-oil pressure
3. Blinking light—glow plug
4. Steady light—battery warning
5. Hourmeter
6. Engine start
7. Parking brake disengaged
8. Traction neutral
9. Auxiliary lever neutral

decal131-0709

131-0709

1. Parking brake—engage
2. Parking brake—disengage

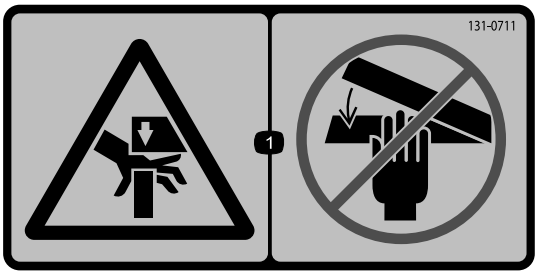

decal131-0711

131-0711

1. Crushing hazard—keep away from pinch points and actuating parts.

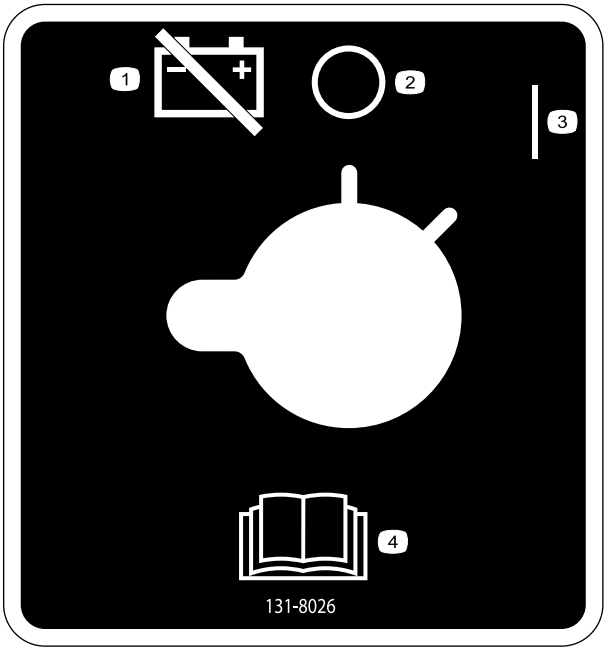

decal131-8026

131-8026

1. Battery power—disconnect
2. On
3. Off
4. Read the *Operator's Manual*.

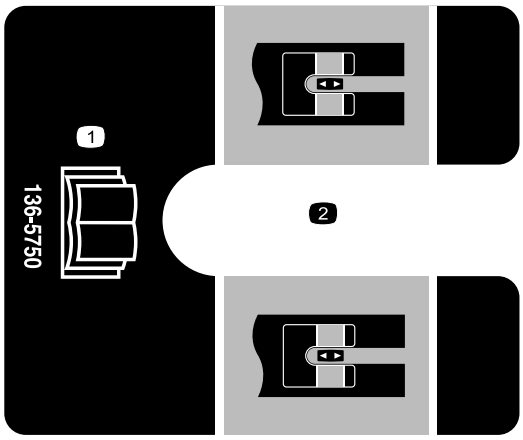

decal136-5750

136-5750

1. Read the *Operator's Manual*.
2. Tension block guide

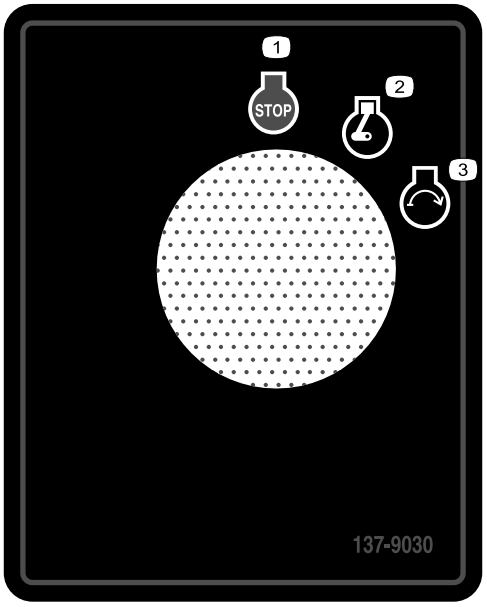

decal137-9030

137-9030

1. Engine—stop
2. Engine—run
3. Engine—start

decal133-8056

133-8056

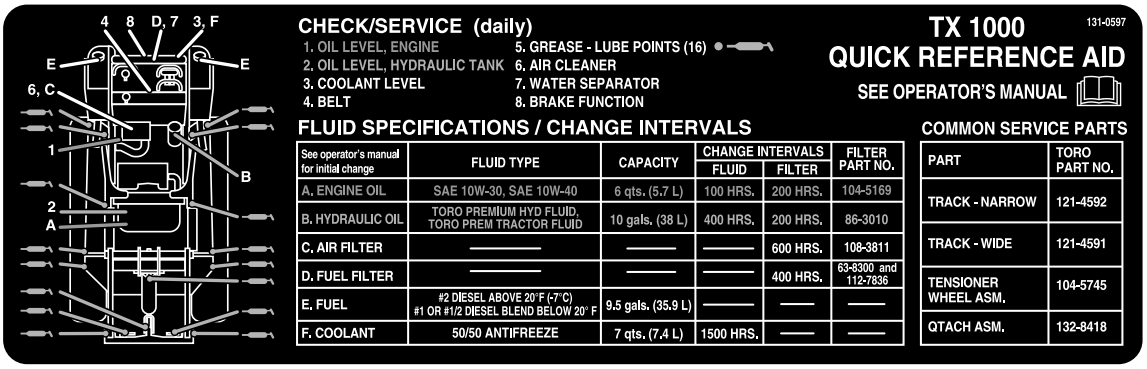

decal131-0597

131-0597

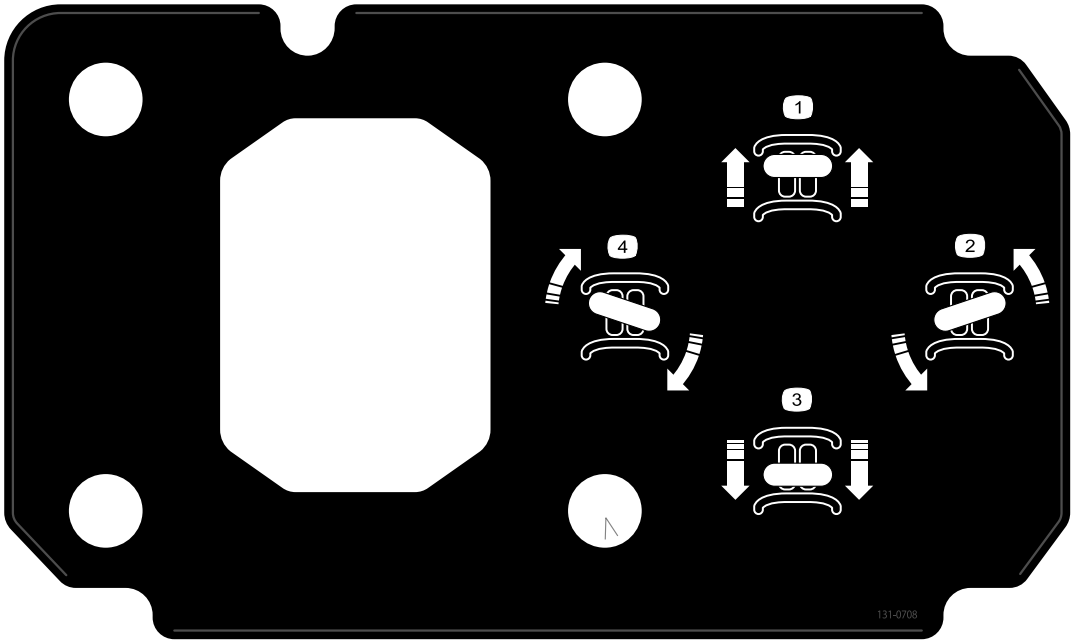

decal131-0708

131-0708

1. Move forward
2. Turn right
3. Move rearward
4. Turn left

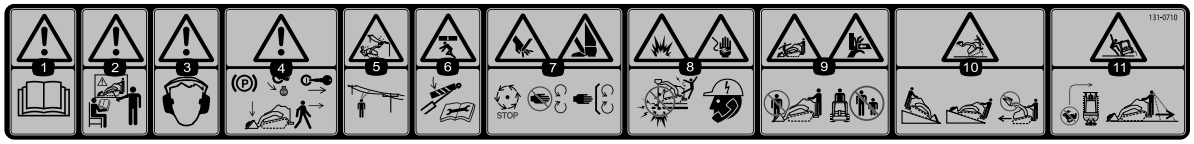

decal131-0710

131-0710

1. Warning—read the *Operator's Manual*.
2. Warning—receive training before operating the machine.
3. Warning—wear hearing protection.
4. Warning—engage the parking brake, lower the attachment to the ground, shut off the engine, and remove the key from the ignition before leaving the machine.
5. Electrocution hazard, power lines—check for power lines in the area before using the machine.
6. Crushing hazard—keep away from pinch points; read the *Operator's Manual* before servicing or performing maintenance.
7. Cutting/severing hazard of hand or foot—wait for all moving parts to stop before servicing; keep away from moving parts; keep all guards and shields in place.
8. Explosion hazard; electrocution hazard—call the local utilities hotline before beginning work in an area.
9. Crushing hazard—keep away from the attachment when operating the machine; keep bystanders away from the machine.
10. Tipping hazard—always move up or down slopes with the attachment lowered; never drive on a slope with the attachment raised; always operate with the heavy end uphill; always carry loads low; never jerk the control levers; use a steady, even motion.
11. Tipping hazard—do not make fast turns; always check behind you before reversing the machine.

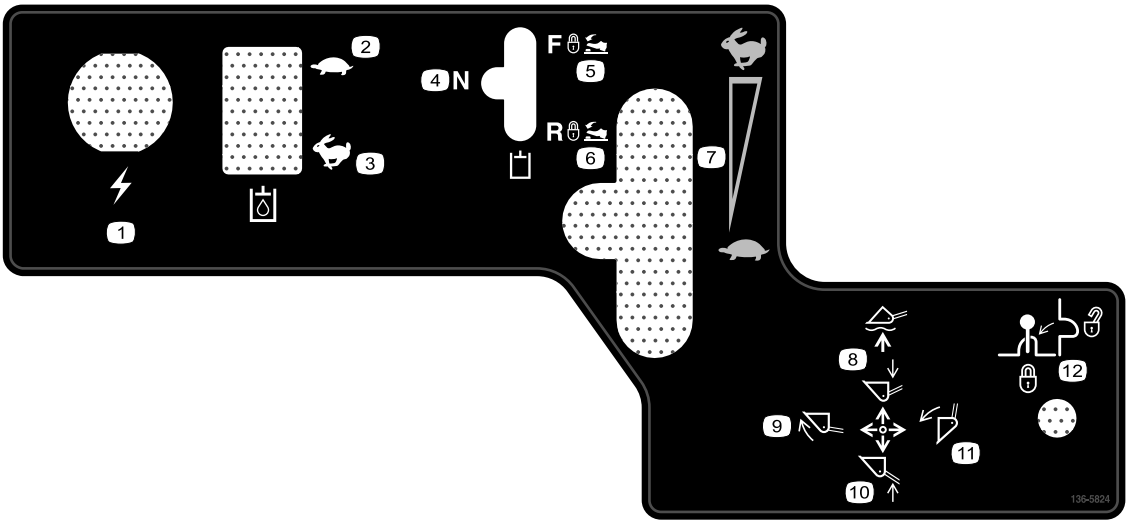

decal136-5824

136-5824

1. Power socket
2. Hydraulic fluid—slow
3. Hydraulic fluid—fast
4. Hydraulic attachment—neutral
5. Hydraulic attachment—forward
6. Hydraulic attachment—reverse
7. Engine speed
8. Lower/float the attachment.
9. Tilt the attachment forward.
10. Raise the attachment.
11. Tilt the attachment rearward.
12. Lever lock

Product Overview

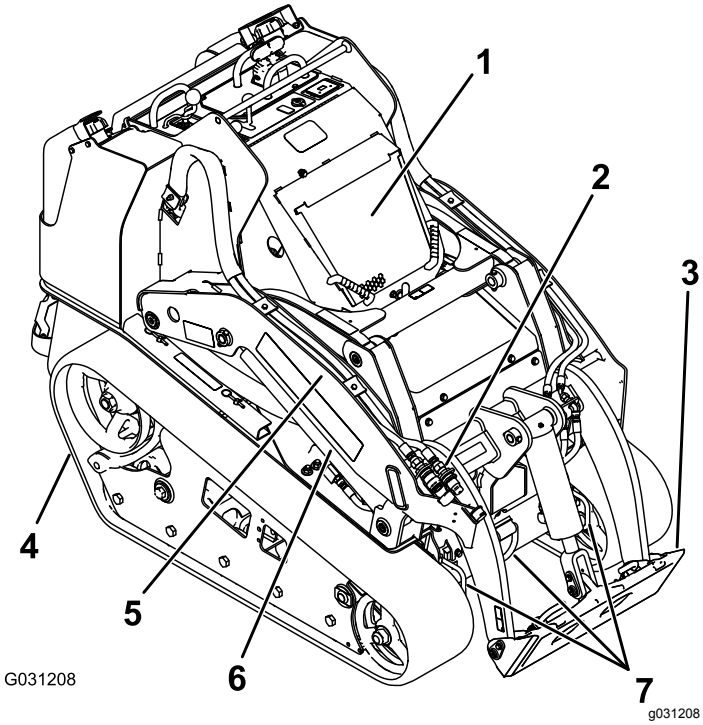

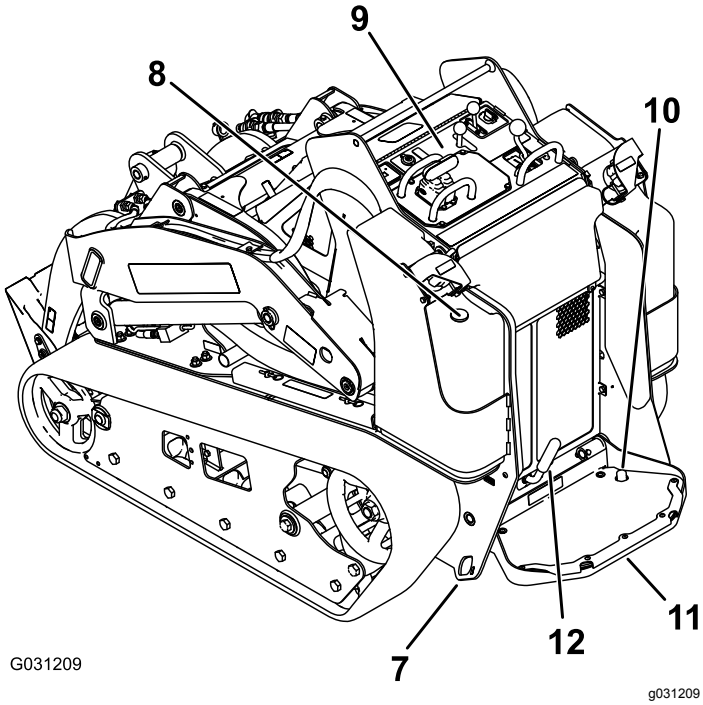

Figure 3

1.	Hood	7.	Tie-down/lift loop
2.	Auxiliary hydraulic couplers	8.	Fuel gauge
3.	Mount plate	9.	Control panel
4.	Track	10.	Auxiliary hydraulics lock switch
5.	Loader arm	11.	Operator platform
6.	Lift cylinder	12.	Parking brake

Controls

Become familiar with all the controls (Figure 4) before you start the engine and operate the traction unit.

Control Panel

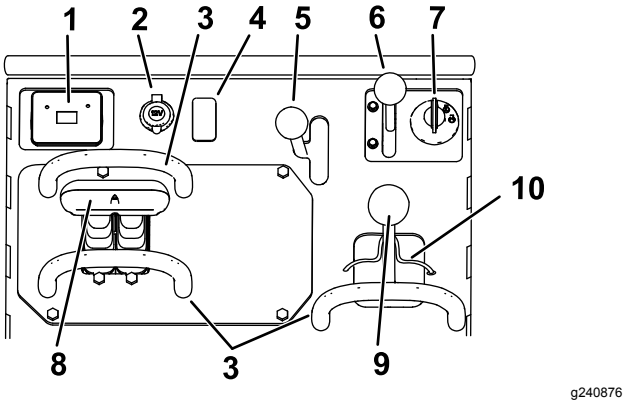

Figure 4

1.	Message display	6.	Throttle lever
2.	Power socket	7.	Key switch
3.	Reference bar	8.	Traction control
4.	Plug	9.	Loader-arm/attachment-tilt lever
5.	Auxiliary hydraulics lever	10.	Loader lock

Key Switch

The key switch, used to start and shut off the engine, has 3 positions: OFF, RUN, and START. Refer to Starting the Engine (page 18).

Throttle Lever

Move the control forward to increase the engine speed and rearward to decrease speed.

Reference Bar

When driving the traction unit, use the reference bar as a handle and a leverage point for controlling the traction control and the auxiliary-hydraulics lever. To ensure smooth, controlled operation, do not take your hands off the reference bars while operating the machine.

Traction Control

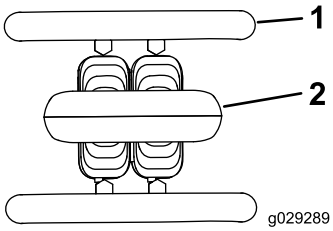

g029289

Figure 5

1. Reference bar
2. Traction control

- To move forward, move the traction control forward (Figure 6).

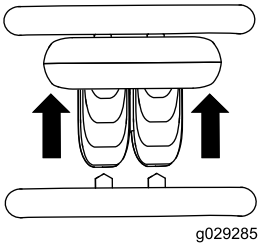

g029285

Figure 6

- To move rearward, move the traction control rearward (Figure 7).

  Important: **When reversing, look behind you for obstructions and keep your hands on the reference bar.**

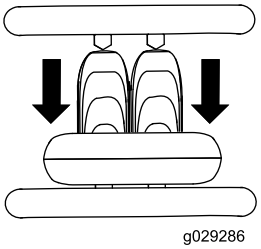

g029286

Figure 7

- To turn right, rotate the traction control clockwise (Figure 8).

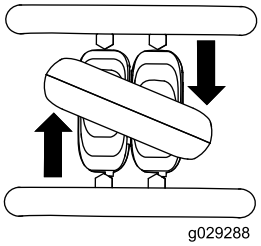

g029288

Figure 8

- To turn left, rotate the traction control counterclockwise (Figure 9).

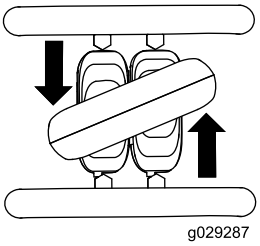

g029287

Figure 9

- To stop the machine, release the traction control (Figure 5).

Note: The farther you move the traction control in any direction, the faster the machine moves in that direction.

Loader-Control-Reference Bar

The loader-control-reference bar helps stabilize your hand while operating the loader arm/attachment-tilt lever (Figure 3).

Loader Arm/Attachment-Tilt Lever

- To tilt the attachment forward, slowly move the lever to the right (Figure 10).
- To tilt the attachment rearward, slowly move the lever to the left (Figure 10).
- To lower the loader arms, slowly move the lever forward (Figure 10).
- To raise the loader arms, slowly move the lever rearward (Figure 10).
- To lower the loader arms to a detent (float) position, push the lever fully forward (Figure 10).

  Note: This allows attachments such as the leveler and the hydraulic blade to follow the contours of the ground (i.e., float) when grading.

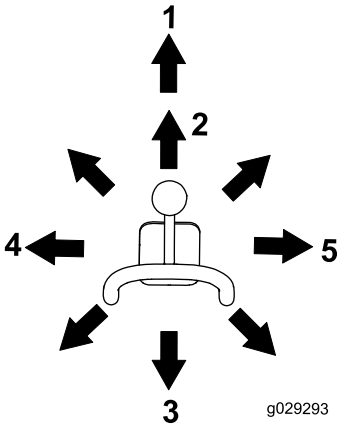

g029293

Figure 10

1. Detent (float) position
2. Lower the loader arms.
3. Raise the loader arms.
4. Tilt the attachment rearward.
5. Tilt the attachment forward.

By moving the lever to an intermediate position (e.g., forward and left), you can move the loader arms and tilt the attachment at the same time.

Loader-Valve Lock

The loader-valve lock secures the loader arm/attachment-tilt lever so that you cannot push it forward. This helps to ensure that no one accidentally lowers the loader arms during maintenance. Secure the loader arms with the lock anytime you need to shut off the machine with the loader arms raised.

To set the lock, lift up on it so that it clears the hole in the control panel and swing it to the left, in front of the loader-arm lever, pushing it down into the locked position (Figure 11).

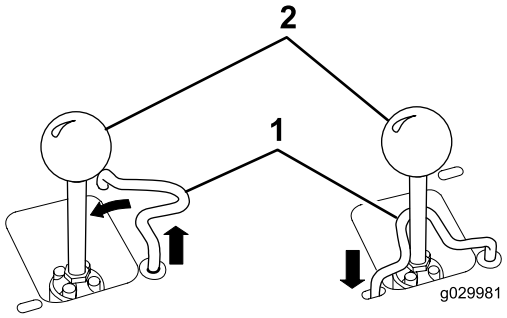

g029981

Figure 11

1. Loader arm/attachment-tilt lever
2. Loader-valve lock

Auxiliary-Hydraulics Lever

- To operate a hydraulic attachment in the forward direction, move the auxiliary-hydraulics lever forward (Figure 12).
- To operate a hydraulic attachment in the reverse direction, move the auxiliary-hydraulics lever rearward (Figure 12).

Note: If you release the lever while in the FORWARD or REVERSE position, the lever automatically returns to the NEUTRAL position (Figure 12).

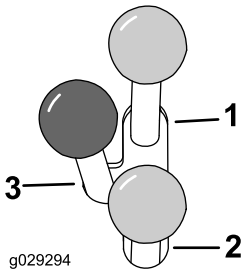

g029294

Figure 12

1. Forward-flow hydraulics
2. Reverse-flow hydraulics
3. Neutral

Auxiliary-Hydraulics-Lock Switch

Use your right foot to press the auxiliary-hydraulics-lock switch to lock the auxiliary-hydraulics lever in the FORWARD or REARWARD position and free your hand for other controls (Figure 4).

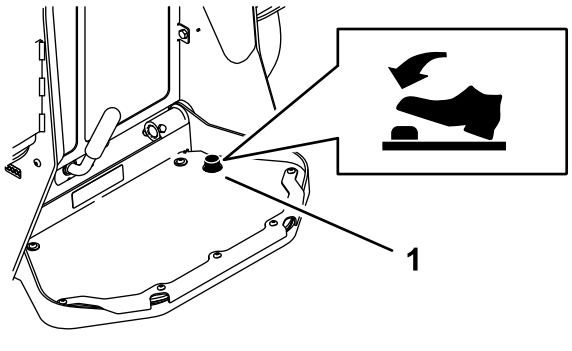

Figure 13

1. Auxiliary-hydraulics-lock

Parking-Brake Lever

- To engage the parking brake, rotate the lever to left (Figure 14).

  Note: The traction unit may roll slightly before the brakes engage in the drive sprocket.

- To release the brake, rotate the brake lever to the right.

  Note: You may need to adjust the traction control to release the brake pins and rotate the lever.

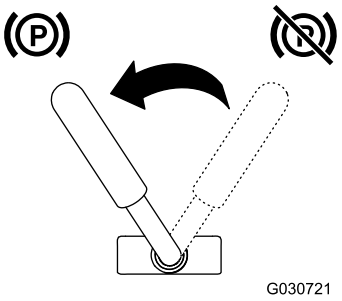

Figure 14

Fuel Gauge

This gauge measures the amount of fuel in the fuel tank(s).

Message Display

Engine-Coolant-Temperature Light

If the engine coolant becomes too hot, the light on the left flashes and the horn sounds (Figure 15). If this happens, disengage the auxiliary hydraulics and let the machine run at high idle to allow the cooling system to cool the machine. Check the coolant level when the engine has fully cooled.

Important: **Do not shut off the engine, as this may cause the machine to overheat.**

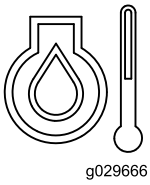

Figure 15

Engine-Oil-Pressure Light

If the engine-oil-pressure becomes too low, the light on the left illuminates steadily (Figure 16). If this happens, shut off the engine immediately and check the oil level. If it is low, add oil and look for possible leaks.

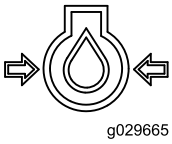

Figure 16

Glow-Plug Light

The light on the right flashes while the glow plugs are charged and warming the engine (Figure 17).

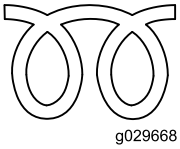

Figure 17

Battery-Charge Light

If the battery charge becomes too low, the light on the right illuminates steadily (Figure 18). If this happens, shut off the engine and charge or replace the battery. Refer to Servicing the Battery (page 33).

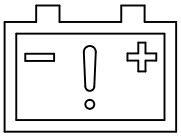

g029667

Figure 18

Hour Meter

The hour meter displays the number of hours of operation that have been logged on the traction unit and the following indicators:

- Engine start—displays when you start the engine

g029974

Figure 19

- Parking brake—displays when you disengage the parking brake

g030520

Figure 20

- Traction neutral—displays when the traction control is in the NEUTRAL position

g029211

Figure 21

- Auxiliary lever neutral—displays when the auxiliary lever is in the NEUTRAL position

g029975

Figure 22

Specifications

Note: Specifications and design are subject to change without notice.

Model 22327	
Width	85 cm (33 inches)
Length	256 cm (101 inches)
Height	138 cm (54 inches)
Weight	1234 kg (2,720 lb)
Operating capacity (with 75 kg (165 lb) operator and standard bucket)	454 kg (1,000 lb)
Tipping capacity (with 75 kg (165 lb) operator and standard bucket)	1296 kg (2,857 lb)
Wheelbase	104 cm (41 inches)
Dump height (with standard bucket)	155 cm (61 inches)
Reach—fully raised (with standard bucket)	62 cm (25 inches)
Height to hinge pin (with standard bucket in highest position)	206 cm (81 inches)

Model 22328	
Width	103 cm (41 inches)
Length	256 cm (101 inches)
Height	138 cm (54 inches)
Weight	1297 kg (2,860 lb)
Operating capacity (with 75 kg (165 lb) operator and standard bucket)	454 kg (1,000 lb)
Tipping capacity (with 75 kg (165 lb) operator and standard bucket)	1296 kg (2,857 lb)
Wheelbase	104 cm (41 inches)
Dump height (with standard bucket)	155 cm (61 inches)
Reach—fully raised (with standard bucket)	62 cm (25 inches)
Height to hinge pin (with standard bucket in highest position)	206 cm (81 inches)

Attachments/Accessories

A selection of Toro approved attachments and accessories is available for use with the machine to enhance and expand its capabilities. Contact your Authorized Service Dealer or authorized Toro distributor or go to www.Toro.com for a list of all approved attachments and accessories.

To ensure optimum performance and continued safety certification of the machine, use only genuine Toro replacement parts and accessories. Replacement parts and accessories made by other manufacturers could be dangerous, and such use could void the product warranty.

Operation

Note: Determine the left and right sides of the machine from the normal operating position.

Before Operation

Before Operation Safety

General Safety

- Never allow children or untrained people to operate or service the machine. Local regulations may restrict the age or require certified training of the operator. The owner is responsible for training all operators and mechanics.
- Become familiar with the safe operation of the equipment, operator controls, and safety decals.
- Know how to stop the machine and shut off the engine quickly.
- Check that the operator's presence controls, safety switches, and shields are attached and functioning properly. Do not operate the machine unless they are functioning properly.
- Locate the pinch-point areas marked on the machine and attachments; keep your hands and feet away from these areas.
- Before operating the machine with an attachment, ensure that the attachment is properly installed and that it is a genuine Toro attachment. Read all the attachment manuals.
- Evaluate the terrain to determine what accessories and attachments you need to properly and safely perform the job.
- Have the property or work area marked for buried lines and other objects, and do not dig in marked areas; note the location of unmarked objects and structures, such as underground storage tanks, wells, and septic systems.
- Inspect the area where you will use the equipment and remove all debris.
- Ensure that the area is clear of bystanders before operating the machine. Stop the machine if anyone enters the area.

Fuel Safety

- Use extra care when handling fuel. It is flammable and its vapors are explosive.
- Extinguish all cigarettes, cigars, pipes, and other sources of ignition.
- Use only an approved fuel container.
- Do not remove the fuel cap or fill the fuel tank while the engine is running or hot.
- Do not add or drain fuel in an enclosed space.
- Do not store the machine or fuel container where there is an open flame, spark, or pilot light, such as on a water heater or other appliance.
- If you spill fuel, do not attempt to start the engine; avoid creating any source of ignition until the fuel vapors have dissipated.

Adding Fuel

Recommended Fuel

Use only clean, fresh diesel fuel or biodiesel fuels with low (<500 ppm) or ultra low (<15 ppm) sulfur content. The minimum cetane rating should be 40. Purchase fuel in quantities that you can use within 180 days to ensure fuel freshness.

Use summer-grade diesel fuel (No. 2-D) at temperatures above -7°C (20°F) and winter grade (No. 1-D or No. 1-D/2-D blend) below that temperature. Using winter-grade fuel at lower temperatures provides lower flash point and cold flow characteristics, which eases starting and reduces fuel filter plugging.

Using summer-grade fuel above -7°C (20°F) contributes toward longer fuel pump life and increased power compared to winter-grade fuel.

Important: **Do not use kerosene or gasoline instead of diesel fuel. Failure to observe this caution will damage the engine.**

Biodiesel Ready

This machine can also use a biodiesel blended fuel of up to B20 (20% biodiesel, 80% petrodiesel). The petrodiesel portion should be low or ultra low sulfur. Observe the following precautions:

- The biodiesel portion of the fuel must meet specification ASTM D6751 or EN14214.
- The blended fuel composition should meet ASTM D975 or EN590.
- Painted surfaces may be damaged by biodiesel blends.
- Use B5 (biodiesel content of 5%) or lesser blends in cold weather.
- Monitor seals, hoses, gaskets in contact with fuel as they may degrade over time.
- Fuel filter plugging may occur for a time after converting to biodiesel blends.
- Contact your distributor for more information on biodiesel.

Filling the Fuel Tanks

Fuel tank capacity: 41 L (11 US gallons)

Fill the fuel tanks as shown in Figure 23.

Note: The fuel-tank caps click when you close them securely. Use the brackets to lock the fuel tanks.

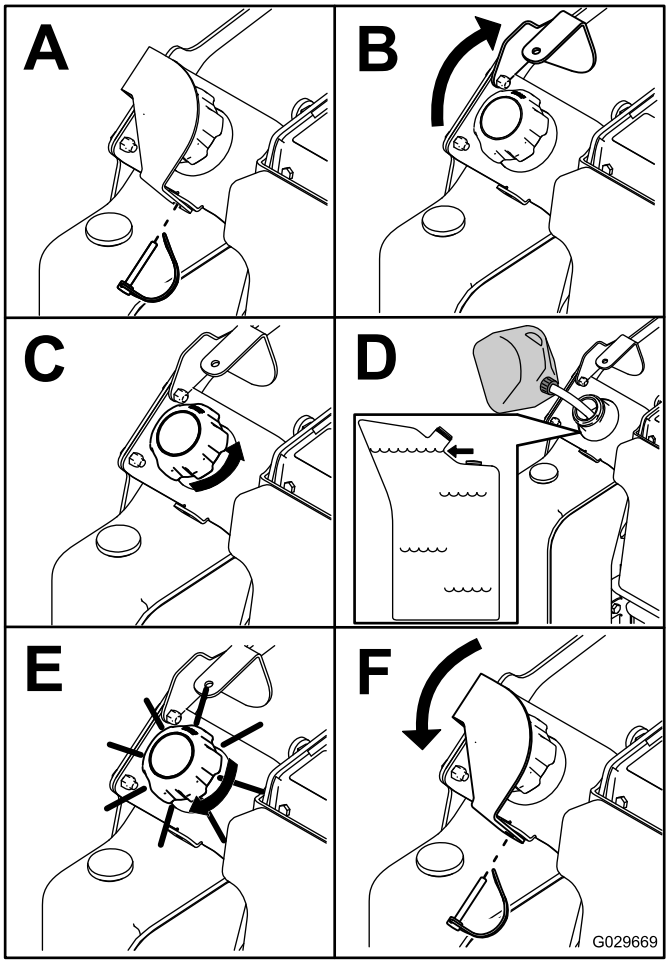

g029669

Figure 23

Performing Daily Maintenance

Before starting the machine each day, perform the Each Use/Daily procedures listed in the Maintenance (page 23).

Important: **Check the hydraulic-fluid level and bleed the fuel system before starting the engine for the first time; refer to Checking the Hydraulic-Fluid Level (page 43) and Bleeding the Fuel System (page 32).**

During Operation

During Operation Safety

General Safety

- Do not carry a load with the arms raised. Always carry loads close to the ground.
- Do not exceed the rated operating capacity, as the machine may become unstable, which may result in loss of control.
- Use only Toro-approved attachments and accessories. Attachments can change the stability and the operating characteristics of the machine.
- For machines with a platform:
  - Lower the loader arms before stepping off the platform.
  - Do not try to stabilize the machine by putting your foot on the ground. If you lose control of the machine, step off the platform and away from the machine.
  - Do not place your feet under the platform.
  - Do not move the machine unless you are standing with both feet on the platform and your hands are holding onto the reference bars.
- Use your full attention while operating the machine. Do not engage in any activity that causes distractions; otherwise, injury or property damage may occur.
- Look behind and down before backing up to ensure that the path is clear.
- Never jerk the controls; use a steady motion.
- The owner/user can prevent and is responsible for accidents that may cause personal injury or property damage.
- Wear appropriate clothing including gloves, eye protection, long pants, substantial slip-resistant footwear, and hearing protection. Tie back long hair and do not wear loose clothing or loose jewelry.
- Do not operate the machine when you are tired, ill, or under the influence of alcohol or drugs.
- Never carry passengers and keep pets and bystanders away from the machine
- Operate the machine only in good light, keeping away from holes and hidden hazards.
- Ensure that all the drives are in neutral and engage the parking brake (if equipped) before starting the engine. Start the engine only from the operator's position.
- Use care when approaching blind corners, shrubs, trees, or other objects that may obscure vision.

- Slow down and use caution when making turns and crossing roads and sidewalks. Watch for traffic.
- Stop the attachment when you are not working.
- Stop the machine, turn off the engine, remove the key, and inspect the machine if you strike an object. Make any necessary repairs before resuming operation.
- Never run an engine in an enclosed area.
- Never leave a running machine unattended.
- Before leaving the operating position, do the following:
  - Park the machine on a level surface.
  - Lower the loader arms and disengage the auxiliary hydraulics.
  - Engage the parking brake (if equipped).
  - Shut off the engine and remove the key.
- Do not operate the machine when there is the risk of lightning.
- Operate the machine only in areas where there is sufficient clearance for you to safely maneuver. Be aware of obstacles in close proximity to you. Failure to maintain adequate distance from trees, walls, and other barriers may result in injury as the machine backs up during operation if you are not attentive to the surroundings.
- Check for overhead clearance (i.e., electrical wires, branches, and doorways) before driving under any objects and do not contact them.
- Do not overfill the attachment and always keep the load level when raising the loader arms. Items in the attachment could fall and cause injury.

Slope Safety

- **Operate the machine up and down slopes with the heavy end of the machine uphill.** Weight distribution changes with attachments. An empty bucket makes the rear of the machine the heavy end, and a full bucket makes the front of the machine the heavy end. Most other attachments make the front of machine the heavy end.
- Raising the loader arms on a slope affects the stability of the machine. Keep the loader arms in the lowered position when on slopes.
- Slopes are a major factor related to loss of control and tip-over accidents, which can result in severe injury or death. Operating the machine on any slope or uneven terrain requires extra caution.
- Establish your own procedures and rules for operating on slopes. These procedures must include surveying the site to determine which slopes are safe for machine operation. Always use common sense and good judgment when performing this survey.
- Slow down and use extra care on hillsides. Ground conditions can affect the stability of the machine.
- Avoid starting or stopping on a slope. If the machine loses traction, proceed slowly, straight down the slope.
- Avoid turning on slopes. If you must turn, turn slowly and keep the heavy end of the machine uphill.
- Keep all movements on slopes slow and gradual. Do not make sudden changes in speed or direction.
- If you feel uneasy operating the machine on a slope, do not do it.
- Watch for holes, ruts, or bumps, as uneven terrain could overturn the machine. Tall grass can hide obstacles.
- Use caution when operating on wet surfaces. Reduced traction could cause sliding.
- Do not operate the machine near drop-offs, ditches, embankments, or bodies of water. The machine could suddenly roll over if a wheel or track goes over the edge or the edge caves in. Maintain a safe distance between the machine and any hazard.
- Do not remove or add attachments on a slope.
- Do not park the machine on a hillside or slope.

Starting the Engine

1. Ensure that the battery-disconnect switch is in the ON position.
2. Ensure that the auxiliary-hydraulics lever and traction-control are in the NEUTRAL position.
3. Move the throttle lever midway between the SLOW and FAST positions.
4. Insert the key into the key switch and turn it to the ON position.
5. Wait for the glow-plug indicator light to stop blinking.
6. Turn the key to the START position. When the engines starts, release the key.

   Important: **Do not engage the starter for more than 10 seconds at a time. If the engine fails to start, wait 30 seconds for the starter to cool down between attempts. Failure to follow these instructions could burn out the starter motor.**
7. Move the throttle lever to the FAST position.

   Important: **Running the engine at high speeds when the hydraulic system is cold (i.e., when the air temperature is at or below freezing) could damage the hydraulic system. When starting the engine in cold conditions, allow it to run in the middle throttle position for 2 to 5 minutes before moving the throttle to the FAST position.**

   Note: If the outdoor temperature is below freezing, store the traction unit in a garage to keep it warmer and to aid in starting.

Driving the Machine

Use the traction control to move the machine. The farther you move the traction control in any direction, the faster the machine moves in that direction. Release the traction control to stop the machine.

The throttle control regulates the engine speed as measured in rpm (revolutions per minute). Place the throttle lever in the FAST position for best performance. You can, however, use the throttle position to operate at slower speeds.

Shutting Off the Engine

1. Park the machine on a level surface, engage the parking brake (if equipped), and lower the loader arms.
2. Ensure that the auxiliary hydraulics lever is in the NEUTRAL position.
3. Move the throttle lever to the SLOW position.
4. If the engine has been working hard or is hot, let it idle for a minute before turning the key switch to the OFF position.

   Note: This helps to cool the engine before you shut it off. In an emergency, you can shut off the engine immediately.
5. Turn the key switch to the OFF position and remove the key.

⚠ CAUTION

A child or untrained bystander could attempt to operate the traction unit and be injured.

Remove the key from the key switch when leaving the traction unit, even if just for a few seconds.

Using Attachments

Installing an Attachment

Important: **Use only Toro-approved attachments. Attachments can change the stability and the operating characteristics of the machine. The warranty of the machine may be voided if you use the machine with unapproved attachments.**

Important: **Before installing the attachment, ensure that the mount plates are free of any dirt or debris and that the pins rotate freely. If the pins do not rotate freely, grease them.**

1. Position the attachment on a level surface with enough space behind it to accommodate the machine.
2. Start the engine.
3. Tilt the attachment mount plate forward.
4. Position the mount plate into the upper lip of the attachment receiver plate (Figure 24).

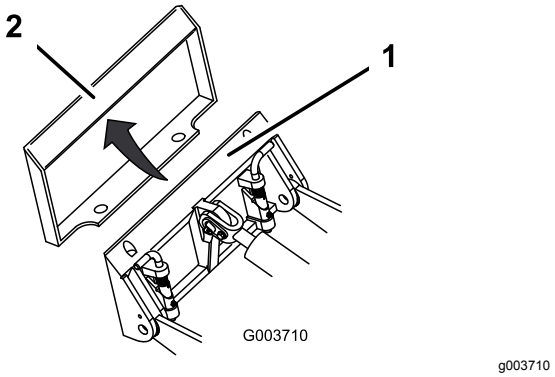

Figure 24

1. Mount plate
2. Receiver plate

5. Raise the loader arms while tilting back the mount plate at the same time.

   Important: **Raise the attachment enough to clear the ground and tilt the mount plate all the way back.**

6. Shut off the engine and remove the key.
7. Engage the quick-attach pins, ensuring that they are fully seated in the mount plate (Figure 25).

   Important: **If the pins do not rotate to the engaged position, the mount plate is not fully aligned with the holes in the attachment receiver plate. Check the receiver plate and clean it if necessary.**

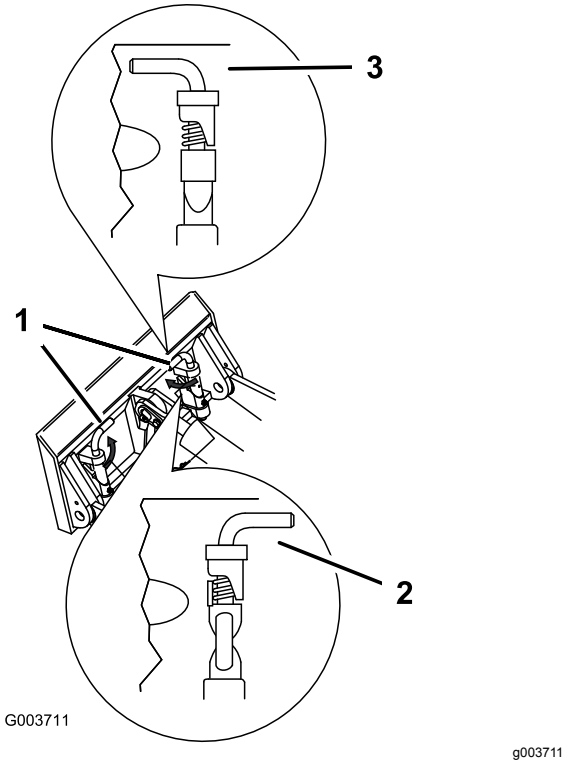

Figure 25

1. Quick-attach pins (engaged position)
2. Disengaged position
3. Engaged position

⚠ WARNING

If you do not fully seat the quick-attach pins through the attachment mount plate, the attachment could fall off the machine, crushing you or bystanders.

Ensure that the quick-attach pins are fully seated in the attachment mount plate.

Connecting the Hydraulic Hoses

⚠ WARNING

Hydraulic fluid escaping under pressure can penetrate skin and cause injury. Fluid injected into the skin must be surgically removed within a few hours by a doctor familiar with this form of injury; otherwise, gangrene may result.

- **Ensure that all hydraulic-fluid hoses and lines are in good condition and all hydraulic connections and fittings are tight before applying pressure to the hydraulic system.**
- **Keep your body and hands away from pinhole leaks or nozzles that eject high-pressure hydraulic fluid.**
- **Use cardboard or paper to find hydraulic leaks; never use your hands.**

⚠ CAUTION

Hydraulic couplers, hydraulic lines/valves, and hydraulic fluid may be hot. If you contact hot components, you may be burned.

- **Wear gloves when operating the hydraulic couplers.**
- **Allow the machine to cool before touching hydraulic components.**
- **Do not touch hydraulic fluid spills.**

If the attachment requires hydraulics for operation, connect the hydraulic hoses as follows:

1. Shut off the engine and remove the key.
2. Move the auxiliary-hydraulics lever forward, backward, and back to the NEUTRAL position to relieve pressure at the hydraulic couplers.
3. Remove the protective covers from the hydraulic connectors on the machine.
4. Ensure that all foreign matter is cleaned from the hydraulic connectors.
5. Push the attachment male connector into the female connector on the machine.

   Note: When you connect the attachment male connector first, you relieve any pressure built up in the attachment.
6. Push the attachment female connector onto the male connector on the machine.
7. Confirm that the connection is secure by pulling on the hoses.

Removing an Attachment

1. Park the machine on a level surface.
2. Lower the attachment to the ground.
3. Shut off the engine and remove the key.
4. Disengage the quick-attach pins by turning them to the outside.
5. If the attachment uses hydraulics, move the auxiliary-hydraulics lever forward, backward, and back to the NEUTRAL position to relieve pressure at the hydraulic couplers.
6. If the attachment uses hydraulics, slide the collars back on the hydraulic couplers and disconnect them.

   Important: **Connect the attachment hoses together to prevent hydraulic system contamination during storage.**
7. Install the protective covers onto the hydraulic couplers on the machine.
8. Start the engine, tilt the mount plate forward, and back the machine away from the attachment.

After Operation

After Operation Safety

- Shut off the engine, remove the key, wait for all movement to stop, and allow the machine to cool before adjusting, cleaning, storing, or servicing it.
- Clean debris from the attachments, drives, mufflers, and engine to help prevent fires. Clean up oil or fuel spills.
- Keep all parts in good working condition and all hardware tightened.
- Do not touch parts that may be hot from operation. Allow them to cool before attempting to maintain, adjust, or service the machine.
- Use care when loading or unloading the machine into a trailer or truck.

Moving a Non-Functioning Machine

Important: **Do not tow or pull the machine without first opening the tow valves, or you will damage the hydraulic system.**

1. Shut off the engine and remove the key.
2. Open the hood and secure the hood prop.
3. Remove the side screens; refer to Removing the Side Screens (page 26).

4. Using a wrench, turn the tow valves on the hydraulic pumps twice counterclockwise (Figure 26).

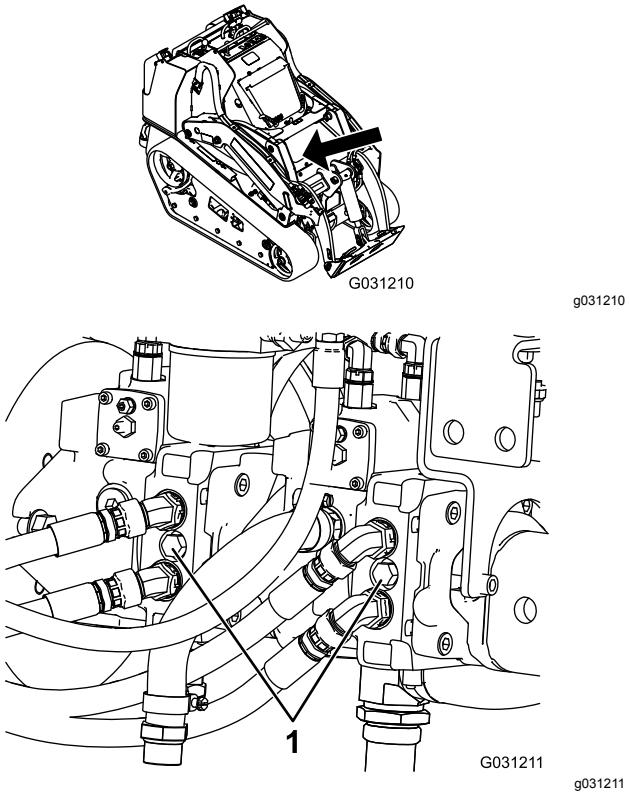

Figure 26

1. Tow valve

5. Tow the machine as required.
6. After repairing the machine, close the tow valves before operating it.

Transporting the Machine

Use a heavy-duty trailer or truck to transport the machine. Use a full-width ramp. Ensure that the trailer or truck has all the necessary brakes, lighting, and marking as required by law. Please carefully read all the safety instructions. Knowing this information could help you or bystanders avoid injury. Refer to your local ordinances for trailer and tie-down requirements.

⚠ WARNING

Driving on the street or roadway without turn signals, lights, reflective markings, or a slow-moving-vehicle emblem is dangerous and can lead to accidents causing personal injury.

Do not drive the machine on a public street or roadway.

Selecting a Trailer

⚠ WARNING

Loading a machine onto a trailer or truck increases the possibility of tip-over and could cause serious injury or death (Figure 27).

- **Use only a full-width ramp; do not use individual ramps for each side of the machine.**
- **Ensure that the length of ramp is at least 4 times as long as the height of the trailer or truck bed to the ground. This ensures that ramp angle does not exceed 15 degrees on flat ground.**

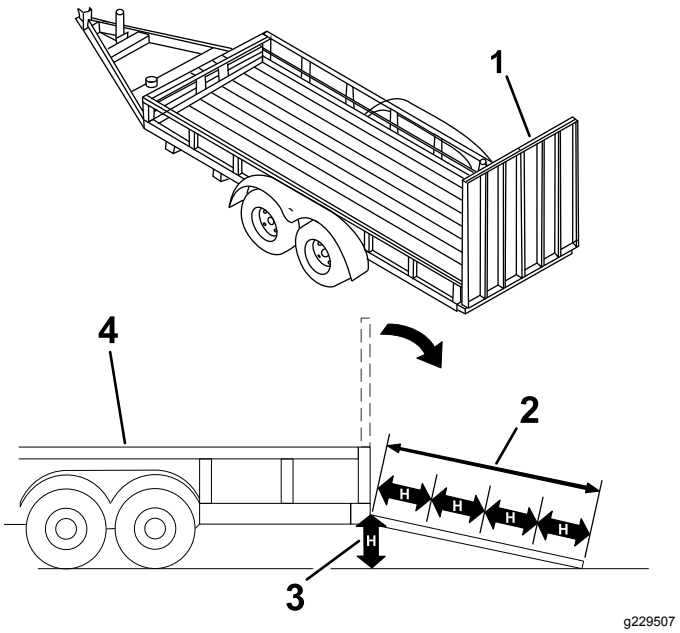

Figure 27

1. Full-width ramp in stowed position
2. Ramp is at least 4 times as long as the height of the trailer or truck bed to the ground
3. H=height of the trailer or truck bed to the ground
4. Trailer

Loading the Machine

⚠ WARNING

Loading a machine onto a trailer or truck increases the possibility of tip-over and could cause serious injury or death.

- **Use extreme caution when operating a machine on a ramp.**
- **Load and unload the machine with the heavy end up the ramp.**
- **Avoid sudden acceleration or deceleration while driving the machine on a ramp as this could cause a loss of control or a tip-over situation.**

1. If using a trailer, connect it to the towing vehicle and connect the safety chains.
2. If applicable, connect the trailer brakes.
3. Lower the ramp (Figure 27).
4. Lower the loader arms.
5. Load the machine onto the trailer with the heavy end up the ramp, carrying loads low (Figure 28).
   - If the machine has a **full** load-carrying attachment (e.g., bucket or adjustable forks) or a non-load-carrying attachment (e.g., stump grinder), drive the machine forward up the ramp.
   - If the machine has an **empty** load-carrying attachment or no attachment, back the machine up the ramp.

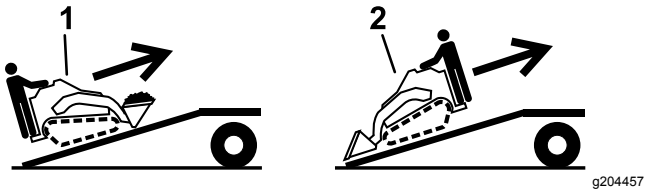

Figure 28

1. Machine with full attachment or non-load-carrying attachment—drive the machine forward up the ramp.
2. Machine with empty or no attachment—back the machine up the ramp.

6. Lower the loader arms all the way down.
7. Shut off the engine, remove the key, and engage the parking brake.
8. Use the metal tie-down loops on the machine to securely fasten the machine to the trailer or truck with straps, chains, cable, or ropes (Figure 29). Refer to local regulations for tie-down requirements.

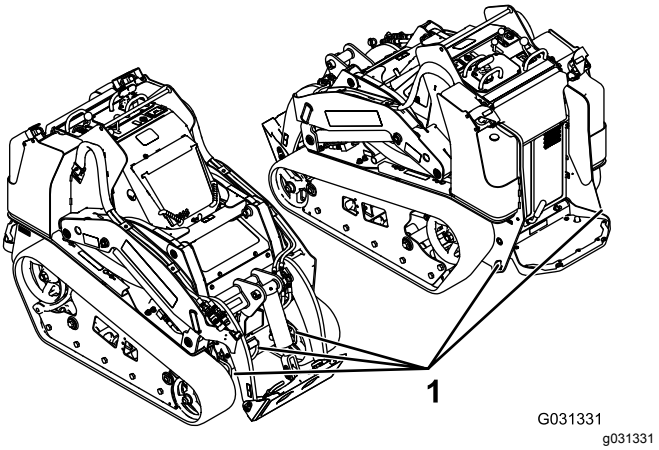

Figure 29

1. Tie-down loops

Unloading the Machine

1. Lower the ramp (Figure 28).
2. Unload the machine from the trailer with the heavy end up the ramp, carrying loads low (Figure 30).
   - If the machine has a **full** load-carrying attachment (e.g., bucket or adjustable forks) or a non-load-carrying attachment (e.g., stump grinder), back it down the ramp.
   - If the machine has an **empty** load-carrying attachment or no attachment, drive it forward down the ramp.

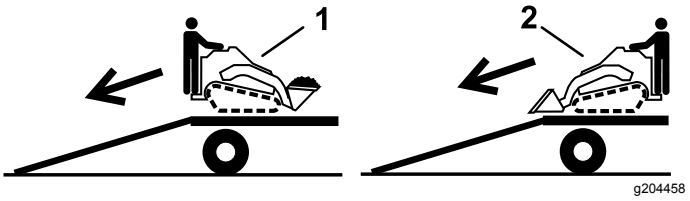

Figure 30

1. Machine with full attachment or non-load-carrying attachment—back the machine down the ramp.
2. Machine with empty or no attachment—drive the machine forward down the ramp.

Lifting the Machine

You can lift the machine using the tie-down/lift loops as lift points; refer to Figure 29.

Maintenance

Note: Determine the left and right sides of the machine from the normal operating position.

Important: **Refer to your engine owner's manual for additional maintenance procedures.**

⚠ CAUTION

If you leave the key in the switch, someone could accidently start the engine and seriously injure you or other bystanders.

Remove the key from the switch before you perform any maintenance.

Recommended Maintenance Schedule(s)

Maintenance Service Interval	Maintenance Procedure
After the first 8 hours	• Check and adjust the track tension. • Replace the hydraulic filter.
After the first 50 hours	• Change the engine oil and filter. • Check and adjust the track tension.
Before each use or daily	• Grease the machine. (Grease immediately after every washing.) • Check the air-filter-service indicator. • Check the engine-oil level. • Drain water and other contaminants from the fuel filter/water separator. • Clean the tracks. • Check the tracks for excessive wear and proper tension. • Clean the screen, oil cooler, and front of the radiator (more often in dirty or dusty conditions). • Check the coolant level in the expansion tank. • Check and clean the radiator screen • Test the parking brake. • Remove debris from the machine. • Check for loose fasteners.
Every 25 hours	• Remove the air-cleaner cover, clean out debris, and check the air-filter-service indicator. • Check the hydraulic-fluid level.
Every 50 hours	• Check the battery condition. • Check and adjust the track tension.
Every 100 hours	• Change the engine oil. (Service more frequently if conditions are extremely dusty or sandy.) • Check the cooling system hoses. • Check the hydraulic lines for leaks, loose fittings, kinked lines, loose mounting supports, wear, weather, and chemical deterioration. • Check for dirt buildup in the chassis. • Check the alternator/fan belt tension (refer to the engine owner's manual for instructions).
Every 200 hours	• Change the oil filter. (Service more frequently if conditions are extremely dusty or sandy.) • Replace the hydraulic filter.
Every 400 hours	• Replace the fuel filter canister and in-line filter. • Check the fuel lines and connections for deterioration, damage, or loose connections. • Change the hydraulic fluid.
Every 500 hours	• Replace the alternator/fan belt (refer to the engine owner's manual for instructions).
Every 1,500 hours	• Replace all moving hydraulic hoses.

Maintenance Service Interval	Maintenance Procedure
Yearly	• Change the engine coolant (Authorized Service Dealer only). • Change the engine coolant.
Yearly or before storage	• Check and adjust the track tension. • Touch up chipped paint.
Every 2 years	• Drain and clean the fuel tank(s)—Authorized Service Dealer only. • Replace all moving hydraulic hoses.

Pre-Maintenance Procedures

Maintenance Safety

- Park the machine on a level surface, disengage the auxiliary hydraulics, lower the attachment, engage the parking brake (if equipped), shut off the engine, and remove the key. Wait for all movement to stop and allow the machine to cool before adjusting, cleaning, storing, or repairing it.
- Clean up oil or fuel spills.
- Do not allow untrained personnel to service the machine.
- Use jack stands to support the components when required.
- Carefully release pressure from components with stored energy.
- Disconnect the battery before making any repairs; refer to Using the Battery-Disconnect Switch (page 33).
- Keep your hands and feet away from the moving parts. If possible, do not make adjustments with the engine running.
- Keep all parts in good working condition and all hardware tightened. Replace all worn or damaged decals.
- Do not tamper with the safety devices.
- Use only Toro-approved attachments. Attachments can change the stability and the operating characteristics of the machine. You may void the warranty if you use the machine with unapproved attachments.
- Use only genuine Toro replacement parts.
- If any maintenance or repair requires the loader arms to be in the raised position, secure the arms in the raised position with the hydraulic-cylinder lock(s).

Using the Cylinder Locks

⚠ WARNING

The loader arms may lower when in the raised position, crushing anyone under them.

Install the cylinder lock(s) before performing maintenance that requires raised loader arms.

Installing the Cylinder Locks

1. Remove the attachment.
2. Raise the loader arms to the fully raised position.
3. Shut off the engine and remove the key.
4. Remove the 2 pins securing the cylinder lock to the posts on the side of the machine.
5. Slide the cylinder lock over the lift-cylinder rod (Figure 31).

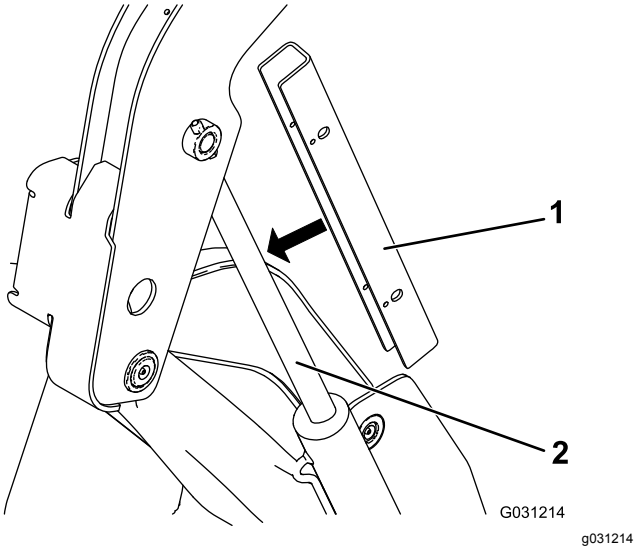

Figure 31

1. Cylinder lock
2. Lift-cylinder rod

6. Repeat step 4 and 5 for the other side of the machine.
7. **Slowly** lower the loader arms until the cylinder locks contact the cylinder bodies and rod ends.

Removing and Storing the Cylinder Locks

Important: **Remove the cylinder locks from the rods and fully secure them in the storage position before operating the machine.**

1. Start the engine.
2. Raise the loader arms to the fully raised position.
3. Shut off the engine and remove the key.
4. Remove the pins securing the cylinder locks.
5. Place the cylinder locks on the posts on the sides of the machine and secure with the pins.
6. Lower the loader arms.

Accessing Internal Components

⚠ WARNING

Opening or removing covers, hoods, and screens while the engine is running could allow you to contact moving parts, seriously injuring you.

Before opening any of the covers, hoods, and screens, shut off the engine, remove the key from the key switch, and allow the engine to cool.

Opening the Hood

1. Loosen the hood-locking screw (Figure 32)

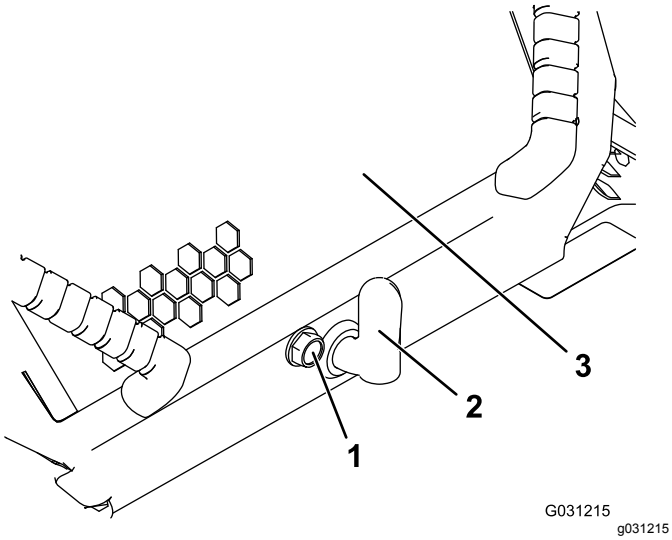

Figure 32

1. Hood-locking screw
2. Hood-latch lever
3. Hood

2. Turn the hood latch clockwise (Figure 32).
3. Lift up on the handles and swing the hood up (Figure 32).
4. Secure the prop rod.

Closing the Hood

1. Lift up on the tab securing the prop rod (Figure 33)

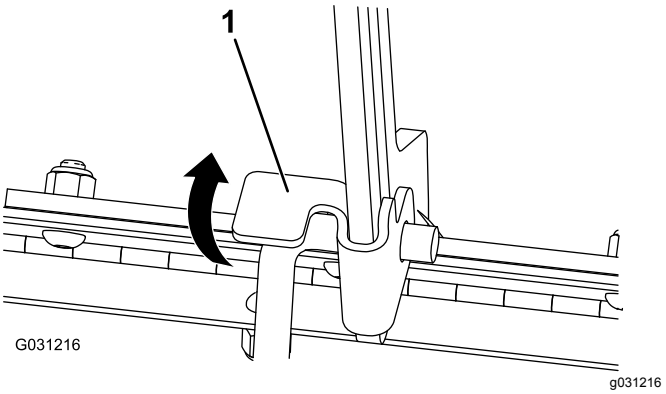

Figure 33

1. Prop-rod tab

2. Lower the hood and secure it by pushing down on the front of the hood until it locks in place.
3. Tighten the hood-locking screw to secure the latch (Figure 32).

Opening the Rear-Access Cover

1. Remove the fastener (Figure 34).

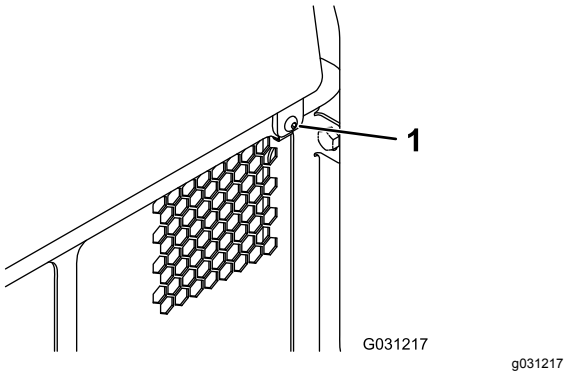

Figure 34

1. Fastener

2. Lift the rear-access cover up to access the internal components (Figure 34).
3. Lower the rear-access cover and install the fastener to close the cover.

Removing the Side Screens

1. Open the hood and secure the hood prop.
2. Slide the side screens (Figure 35) up and out of the slots in the front screen and frame.

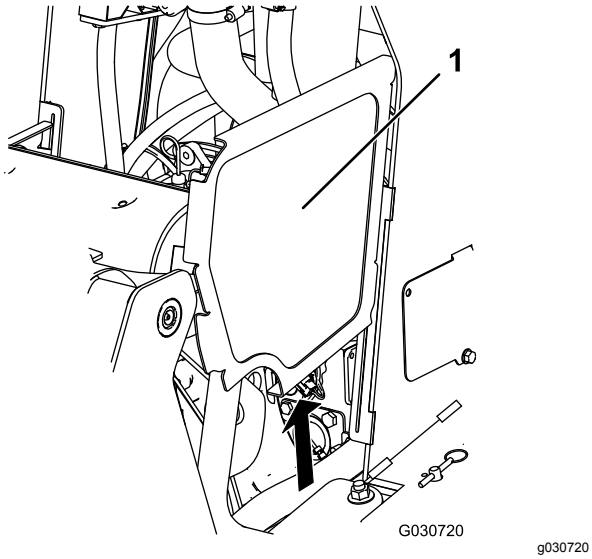

Figure 35

Loader arms not shown for clarity

1. Side screen

Removing the Front Screen

1. Open the hood and secure the hood prop.
2. Loosen the 2 top bolts and 2 front bolts.

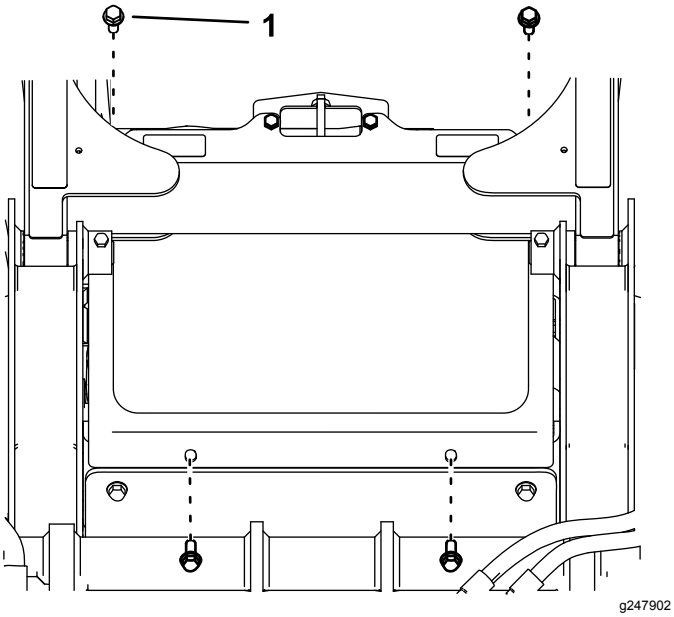

Figure 36

1. Bolt

3. Remove the screen.

Removing the Front Cover

1. Remove the 2 upper bolts (3/8 x 1 inch), 2 washers, and 2 lower bolts (5/16 x 5/8 inch) from the front cover.
2. Remove the front cover.

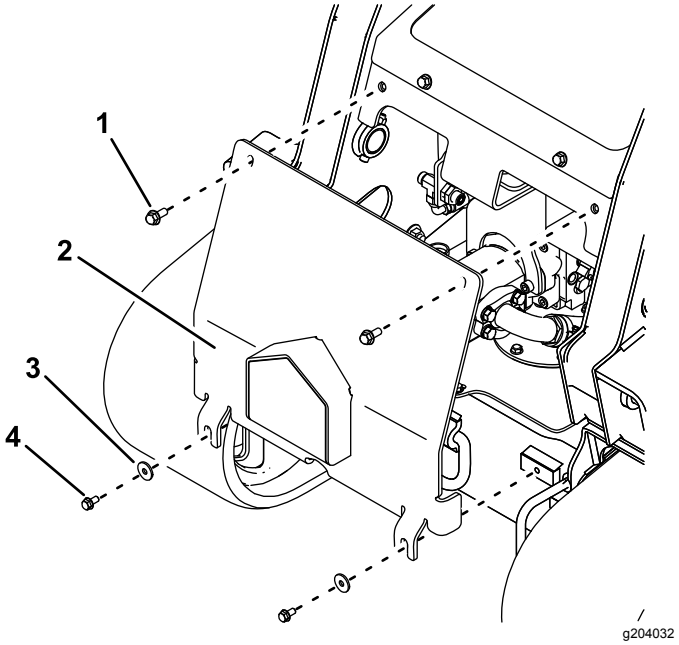

Figure 37

1. Upper bolt—3/8 x 1 inch (2)
2. Front cover
3. Washer (2)
4. Lower bolt—5/16 x 5/8 inch (2)

Lubrication

Greasing the Machine

Service Interval: Before each use or daily (Grease immediately after every washing.)

Grease Type: General-purpose grease.

1. Park the machine on a level surface, engage the parking brake, and lower the loader arms.
2. Shut off the engine and remove the key.
3. Clean the grease fittings with a rag.
4. Connect a grease gun to each fitting (Figure 38, Figure 39, and Figure 40).

   Note: Raise the loader arms before greasing the fittings in Figure 40.

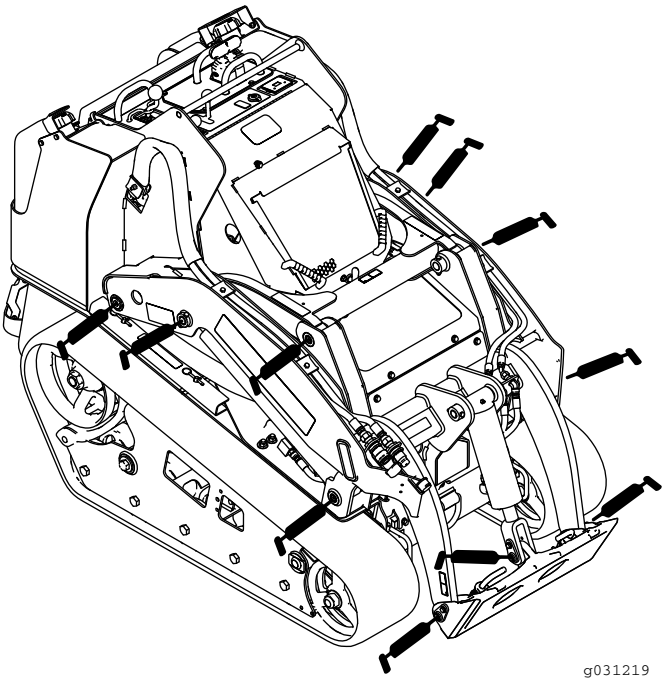

g031219

Figure 38

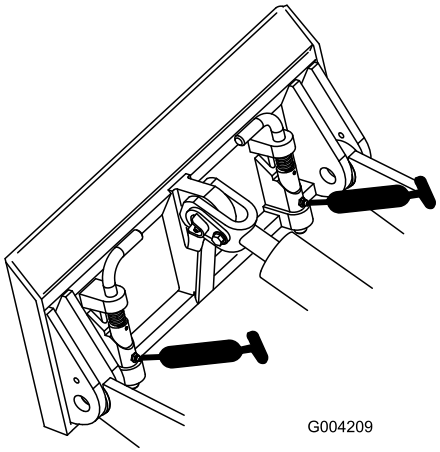

g004209

Figure 39

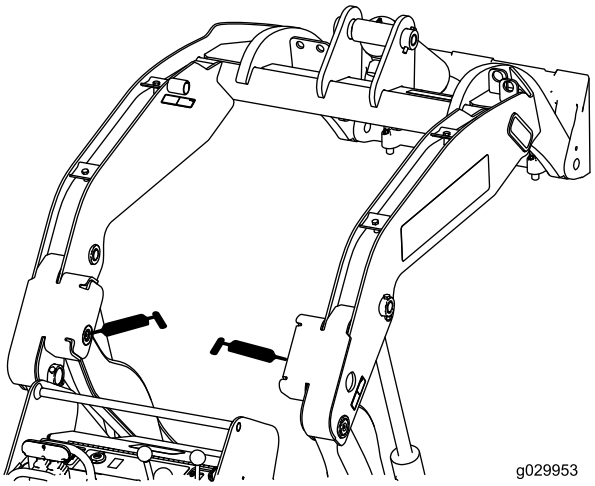

g029953

Figure 40

5. Pump grease into the fittings until grease begins to ooze out of the bearings (approximately 3 pumps).
6. Wipe up any excess grease.

Engine Maintenance

Engine Safety

- Shut off the engine before checking the oil or adding oil to the crankcase.
- Do not change the engine governor setting or overspeed the engine.
- Keep your hands, feet, face, clothing, and other body parts away from the muffler and other hot surfaces.

Servicing the Air Cleaner

Service Interval: Before each use or daily—Check the air-filter-service indicator.

Every 25 hours—Remove the air-cleaner cover, clean out debris, and check the air-filter-service indicator.

Servicing the Air-Cleaner Cover and Body

Important: **Replace the air-cleaner filter only when the service indicator shows red (Figure 41). Changing the air filter before it is necessary only increases the chance of dirt entering the engine when you remove the filter.**

1. Park the machine on a level surface, engage the parking brake (if equipped), and lower the loader arms.
2. Shut off the engine and remove the key.
3. Open the hood and secure the prop rod (if applicable).
4. Check the air-cleaner body for damage that could cause an air leak. Check the whole intake system for leaks, damage, or loose hose clamps.

   Replace or repair any damaged components.
5. Release the latches on the air cleaner and pull the air-cleaner cover off the air-cleaner body (Figure 41).

   Important: **Do not remove the air filter.**

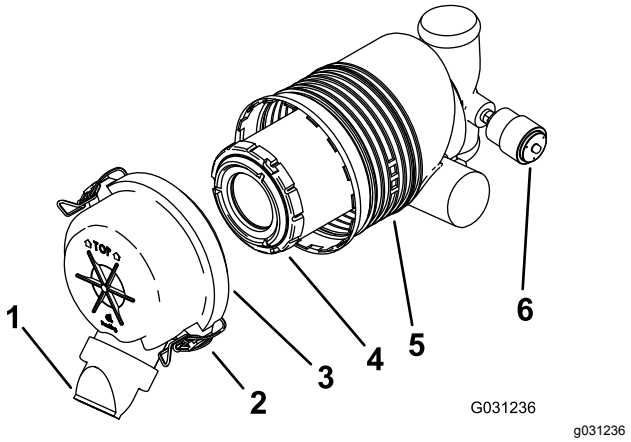

Figure 41

1.	Dust cap	4.	Primary filter
2.	Latch	5.	Air-filter body
3.	Air-cleaner cover	6.	Service indicator

6. Squeeze the dust cap sides to open it and knock the dust out.
7. Clean the inside of the air-cleaner cover with compressed air that is under 205 kPa (30 psi).

   Important: **Do not use compressed air on the air-cleaner body.**
8. Check the service indicator.
   - If the service indicator is clear, install the air-cleaner cover with the dust cap oriented downward and secure the latches (Figure 41).
   - If the service indicator is red, replace the air filter as described in Replacing the Filter (page 28).

Replacing the Filter

Important: **To prevent engine damage, always operate the engine with the air filter and cover installed.**

1. Gently slide the filter out of the air-cleaner body (Figure 41).

   Note: Avoid knocking the filter into the side of the body.

   Important: **Do not attempt to clean the filter.**
2. Inspect the new filter for tears, an oily film, or damage to the rubber seal. Look into the filter while shining a bright light on the outside of the filter; holes in the filter appear as bright spots.

   If the filter is damaged, do not use it.
3. Carefully install the filter (Figure 41).

   Note: Ensure that the filter is fully seated by pushing on the outer rim of the filter while installing it.

Important: **Do not press on the soft inside area of the filter.**

4. Install the air-cleaner cover with the dust cap oriented downward and secure the latches (Figure 41).
5. Close the hood.

Servicing the Engine Oil

Service Interval: Before each use or daily—Check the engine-oil level.

After the first 50 hours—Change the engine oil and filter.

Every 100 hours—Change the engine oil. (Service more frequently if conditions are extremely dusty or sandy.)

Every 200 hours—Change the oil filter. (Service more frequently if conditions are extremely dusty or sandy.)

Engine-Oil Specifications

Oil Type: Detergent diesel engine oil (API service CH-4 or higher)

Crankcase Capacity: with filter 5.7 L (1.5 US gallons)

Viscosity: See the table below.

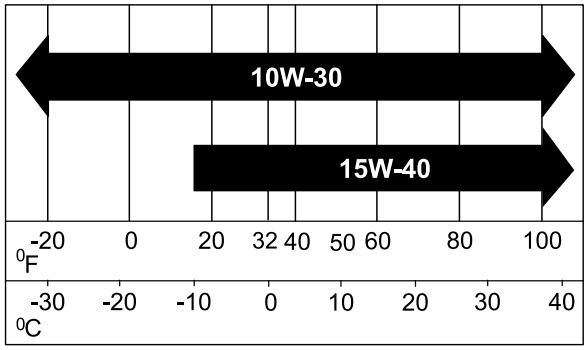

g238048

Figure 42

Checking the Engine-Oil Level

1. Park the machine on a level surface, engage the parking brake, and lower the loader arms.
2. Shut off the engine, remove the key, and allow the engine to cool.
3. Open the hood and secure the prop rod.
4. Clean the area around the oil dipstick and oil-fill cap (Figure 43).

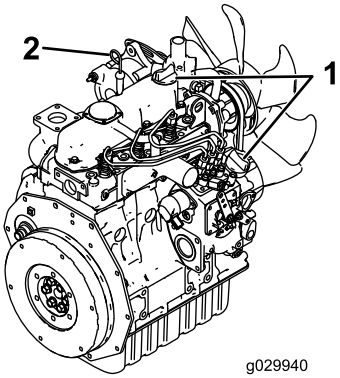

g029940

Figure 43

1. Oil-fill cap
2. Oil dipstick

5. Check the oil and add additional oil as needed (Figure 44).

   Important: **Do not overfill the crankcase with oil; if the oil in the crankcase is too high and you run the engine, you may damage the engine.**

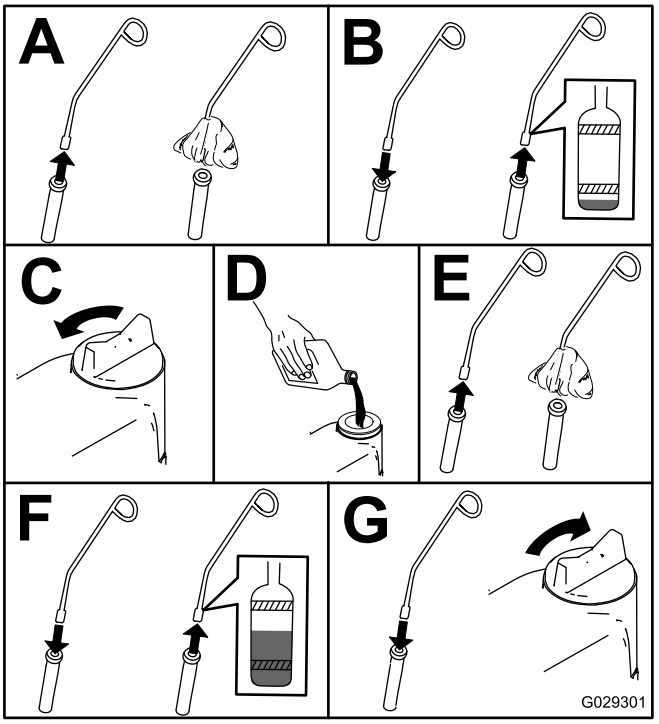

g029301

Figure 44

Changing the Engine Oil

1. Start the engine and let it run for 5 minutes.

   Note: This warms the oil so that it drains better.
2. Park the machine on a level surface.
3. Raise the loader arms and secure with the cylinder locks; refer to Installing the Cylinder Locks (page 24).

4. Engage the parking brake, shut off the engine, and remove the key.
5. Drain the oil beneath the platform (Figure 45).

⚠ CAUTION

Components will be hot if the machine has been running. If you touch hot components, you may be burned.

Use care to avoid touching hot components while changing the oil and/or filter.

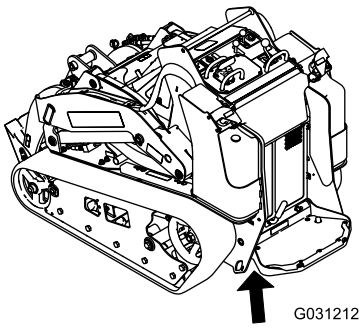

g031212

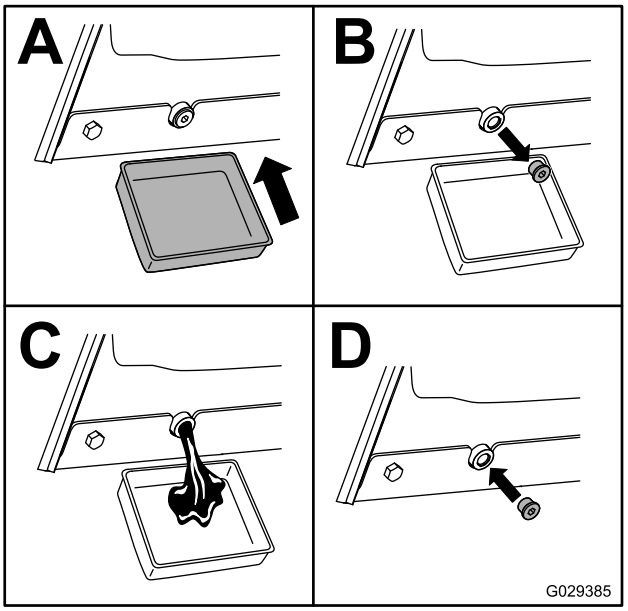

g029385

Figure 45

6. Remove the oil-fill cap and slowly pour approximately 80% of the specified amount of oil in through the valve cover.
7. Check the oil level.
8. Slowly add additional oil to bring the level to the upper hole on the dipstick.
9. Replace the fill cap.

Changing the Oil Filter

1. Raise the loader arms and secure with the cylinder locks; refer to Installing the Cylinder Locks (page 24).
2. Engage the parking brake, shut off the engine, and remove the key.
3. Remove the front cover; refer to Removing the Front Cover (page 26).
4. Drain the oil from the engine; refer to Changing the Engine Oil (page 29).
5. Place a shallow pan or rag under the filter to catch oil.
6. Change the oil filter (Figure 46).

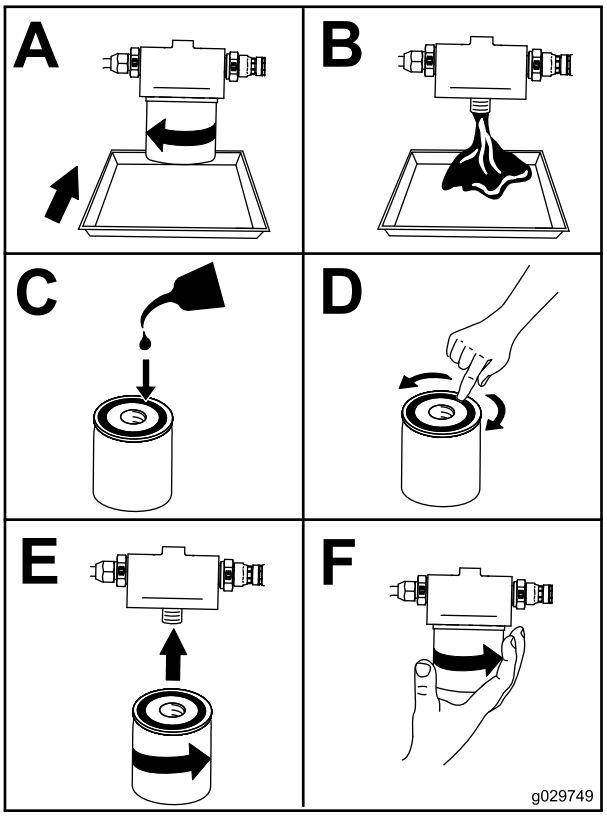

g029749

Figure 46

7. Remove the oil-fill cap and slowly pour approximately 80% of the specified amount of oil in through the valve cover.
8. Check the oil level.
9. Slowly add additional oil to bring the level to the upper hole on the dipstick.
10. Replace the fill cap.
11. Install the front cover; refer to Removing the Front Cover (page 26).

Fuel System Maintenance

⚠ DANGER

In certain conditions, fuel is extremely flammable and highly explosive. A fire or explosion from fuel can burn you and others and can damage property.

Refer to Fuel Safety (page 15) for a complete list of fuel related precautions.

Draining the Fuel Filter/Water Separator

Service Interval: Before each use or daily

1. Park the machine on a level surface, engage the parking brake, and lower the loader arms.
2. Shut off the engine and remove the key.
3. Open the rear-access cover; refer to Opening the Rear-Access Cover (page 25).
4. Locate the fuel filter on the rear side of the engine (Figure 47) and place a clean container under it.

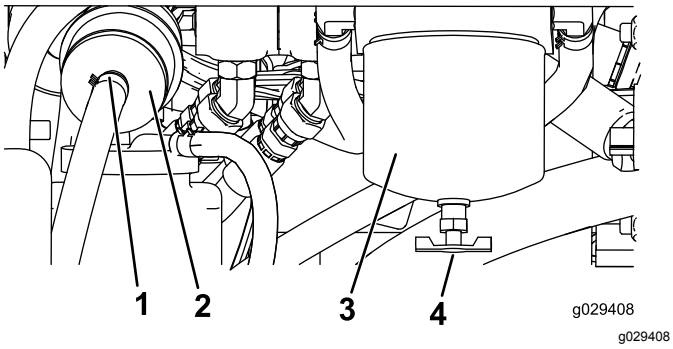

Figure 47

1. Hose clamp
2. In-line filter
3. Fuel-filter canister/water separator
4. Drain valve

5. Loosen the drain valve on the bottom of the filter canister and allow the water to drain.
6. When finished, tighten the drain valve.
7. Close the rear-access cover and secure with the fastener.

Replacing the Fuel Filter Canister and In-Line Filter

Service Interval: Every 400 hours

1. Park the machine on a level surface, engage the parking brake, and lower the loader arms.
2. Shut off the engine and remove the key.
3. Open the rear-access cover; refer to Opening the Rear-Access Cover (page 25).
4. Locate the fuel filters on the right side of the engine (Figure 47) and place a clean container under it.
5. Clean the area where the filter canister mounts (Figure 47).
6. Remove the filter canister and clean the mounting surface (Figure 47).
7. Lubricate the gasket on the new filter canister with clean oil.
8. Fill the canister with fuel.
9. Install the filter canister by hand until the gasket contacts the mounting surface, then rotate it an additional 1/2 turn (Figure 47).
10. Locate the in-line filter to the left of the fuel filter canister (Figure 47) and note the direction of flow arrow on the side of the in-line filter.
11. Open the clamps on each end of the in-line filter and slide the hoses off it (Figure 47). Discard the filter.
12. Slide the hoses over the end of a new filter (Figure 47), ensuring that the arrow on the filter is pointing toward the engine or electric fuel pump.
13. Secure the hoses to the filter with the hose clamps.
14. Close the rear-access cover and secure with the fastener(s).

Checking the Fuel Lines and Connections

Service Interval: Every 400 hours/Yearly (whichever comes first)

Inspect the fuel lines and connections for deterioration, damage, or loose connections. Tighten any loose connections and contact your Authorized Service Dealer for assistance in fixing damaged fuel lines.

Bleeding the Fuel System

You must bleed the fuel system before starting the engine if any of the following situations have occurred:

- Initial startup of a new machine
- The engine has ceased running due to a lack of fuel.
- Maintenance has been performed upon fuel-system components (e.g., filter replaced).

1. Turn the key to the RUN position.
2. Let the fuel pump run for 2 minutes prior to starting the machine.

Draining the Fuel Tank(s)

Service Interval: Every 2 years

Have an Authorized Service Dealer drain and clean the fuel tank(s).

Electrical System Maintenance

Electrical System Safety

- Disconnect the battery before repairing the machine. Disconnect the negative terminal first and the positive last. Connect the positive terminal first and the negative last.
- Charge the battery in an open, well-ventilated area, away from sparks and flames. Unplug the charger before connecting or disconnecting the battery. Wear protective clothing and use insulated tools.
- Battery acid is poisonous and can cause burns. Avoid contact with skin, eyes, and clothing. Protect your face, eyes, and clothing when working with a battery.
- Battery gases can explode. Keep cigarettes, sparks, and flames away from the battery.

Servicing the Battery

Service Interval: Every 50 hours

Using the Battery-Disconnect Switch

⚠ WARNING

Contact with hot surfaces may cause personal injury.

Keep your hands, feet, face, clothing and other body parts away the muffler and other hot surfaces.

1. Park the machine on a level surface, engage the parking brake, and lower the loader arms.
2. Shut off the engine and remove the key.
3. Open the hood, secure the prop rod, and remove the left side screen.
4. Turn the battery-disconnect switch to the ON or OFF position to perform the following:
   - To energize the machine electrically, rotate the battery-disconnect switch clockwise to the ON position (Figure 48).
   - To de-energize the machine electrically, rotate the battery-disconnect switch counterclockwise to the OFF position (Figure 48).

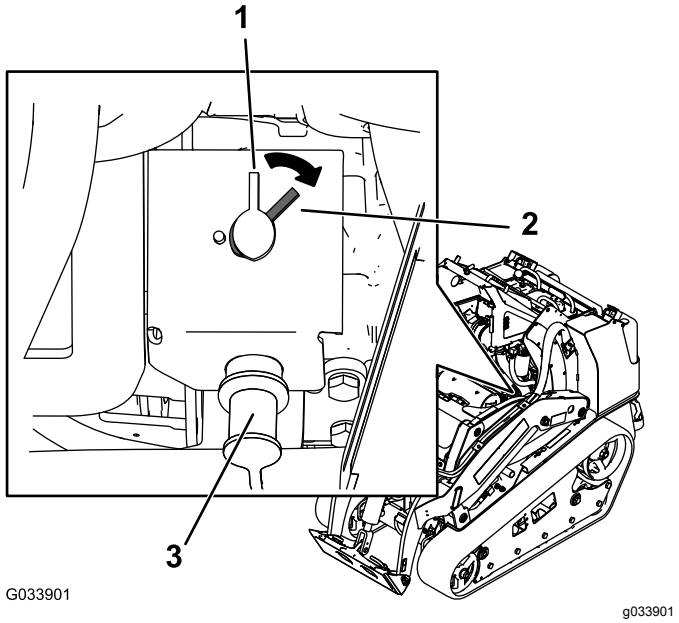

Figure 48

1. Battery-disconnect switch—OFF position
2. Battery-disconnect switch—ON position
3. Jump post

Removing the Battery

1. Park the machine on a level surface, engage the parking brake, and lower the loader arms.
2. Shut off the engine and remove the key.
3. Remove the battery as shown in Figure 49.

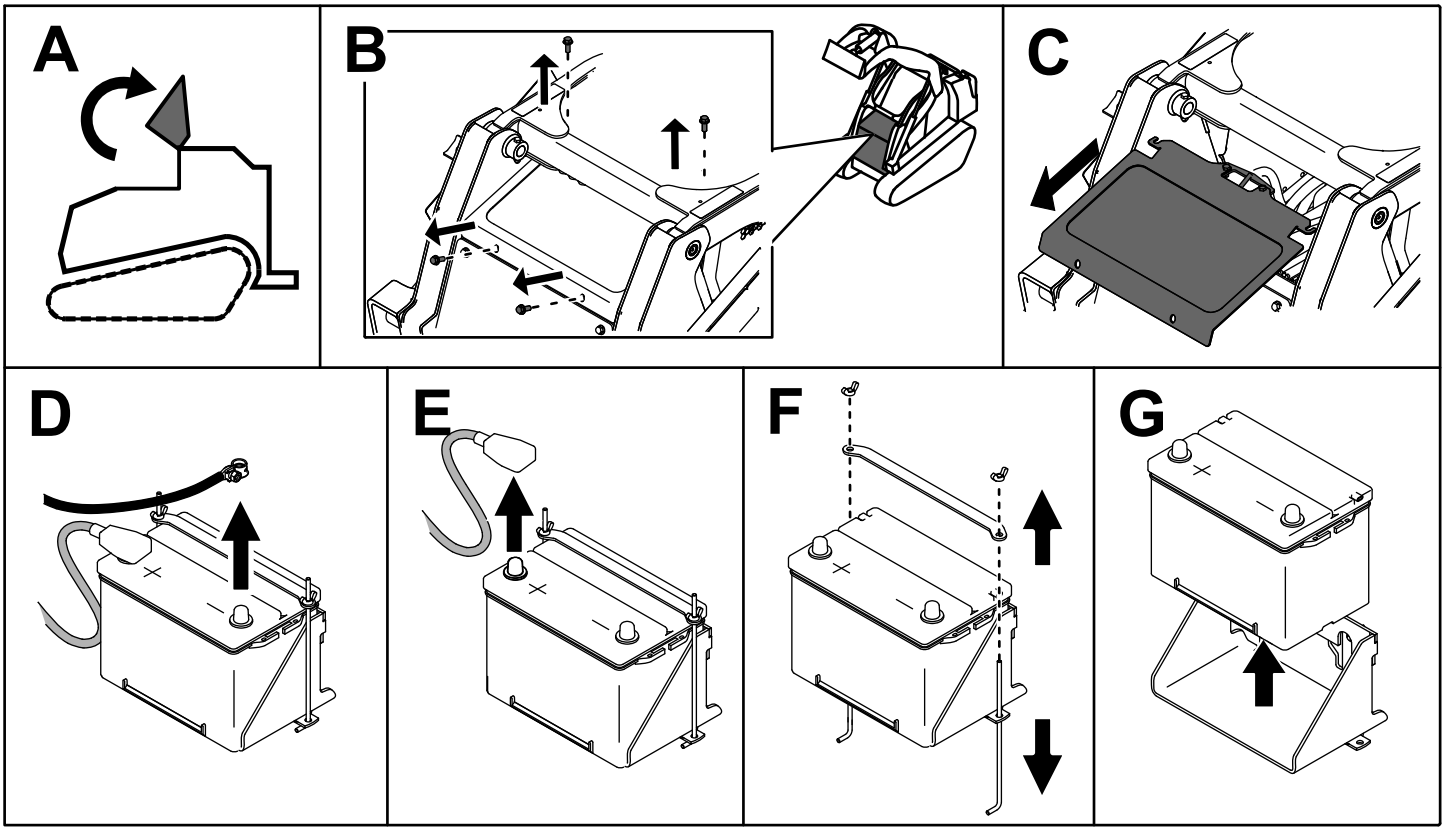

g204573

Figure 49

Charging the Battery

⚠ WARNING

Charging the battery produces gasses that can explode.

Never smoke near the battery and keep sparks and flames away from battery.

Important: **Always keep the battery fully charged (1.265 specific gravity). This is especially important to prevent battery damage when the temperature is below 0°C (32°F).**

1. Remove the battery from the machine; refer to Removing the Battery (page 34).
2. Charge the battery for 4 to 8 hours at a rate of 3 to 4 A (Figure 50). Do not overcharge the battery.

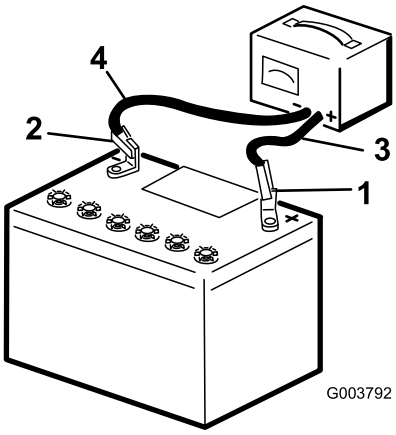

g003792

Figure 50

1. Positive battery post
2. Negative battery post
3. Red (+) charger lead
4. Black (-) charger lead

3. When the battery is fully charged, unplug the charger from the electrical outlet, then disconnect the charger leads from the battery posts (Figure 50).

Cleaning the Battery

Note: Keep the terminals and the entire battery case clean, because a dirty battery discharges slowly.

1. Park the machine on a level surface, engage the parking brake (if equipped), and lower the loader arms.
2. Shut off the engine and remove the key.
3. Remove the battery from the machine; Removing the Battery (page 34).
4. Wash the entire case with a solution of baking soda and water.
5. Rinse the battery with clear water.
6. Coat the battery posts and cable connectors with Grafo 112X (skin-over) grease (Toro Part No. 505-47) or petroleum jelly to prevent corrosion.
7. Install the battery; refer to Installing the Battery (page 35).

Installing the Battery

Install the battery as shown in Figure 51.

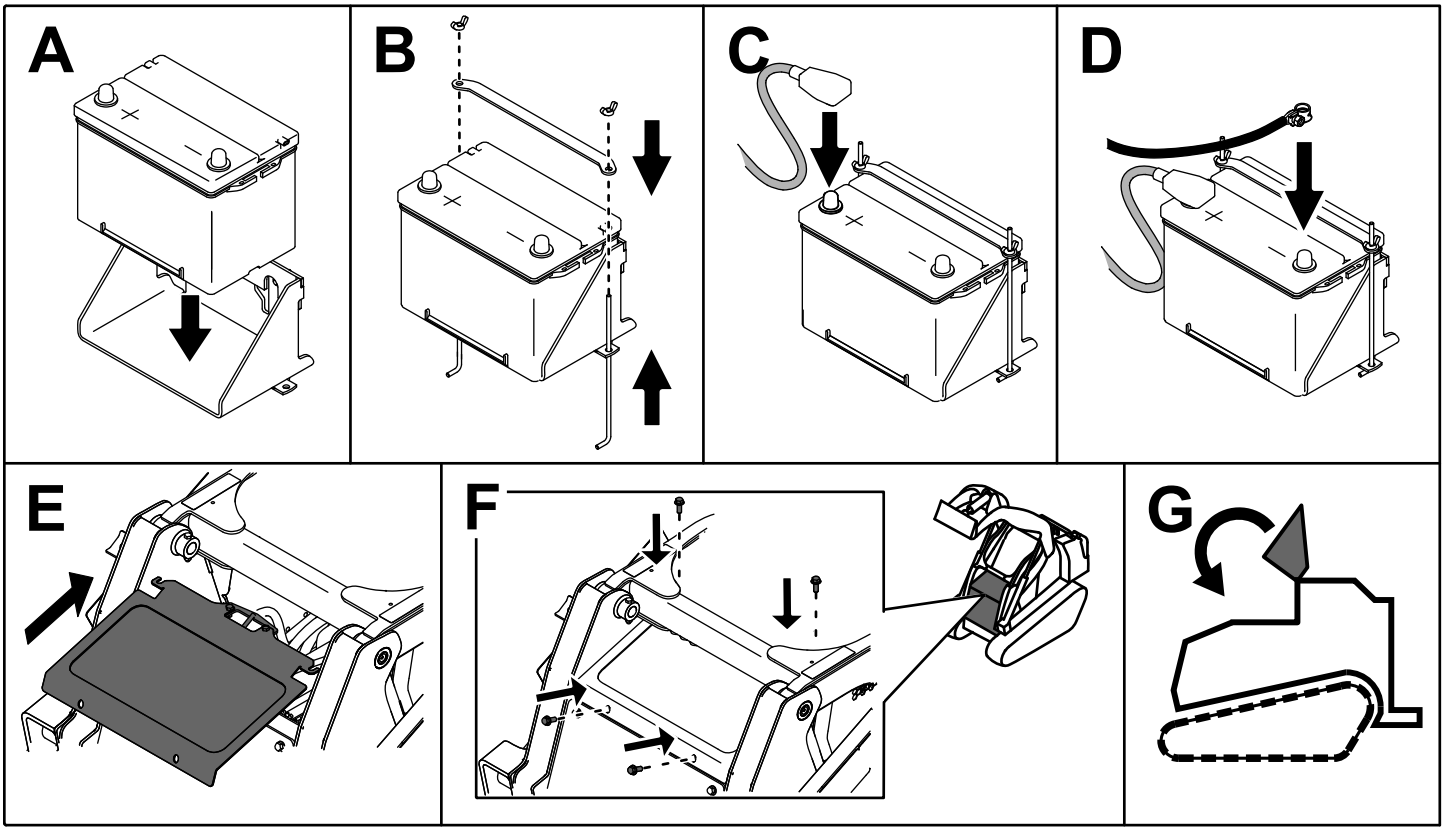

Figure 51

Servicing a Replacement Battery

The original battery is maintenance-free and does not require service. For servicing a replacement battery, refer to the battery manufacturer's instructions.

Jump-Starting the Machine

⚠ WARNING

Contact with hot surfaces may cause personal injury.

Keep hands, feet, face, clothing and other body parts away the muffler and other hot surfaces.

⚠ WARNING

Jump-starting the battery can produce gasses that can explode.

Do not smoke near the battery, and keep sparks and flames away from battery.

1. Open the hood, secure the prop rod, and remove the left side screen.
2. Remove the cover from the jump post (Figure 52).

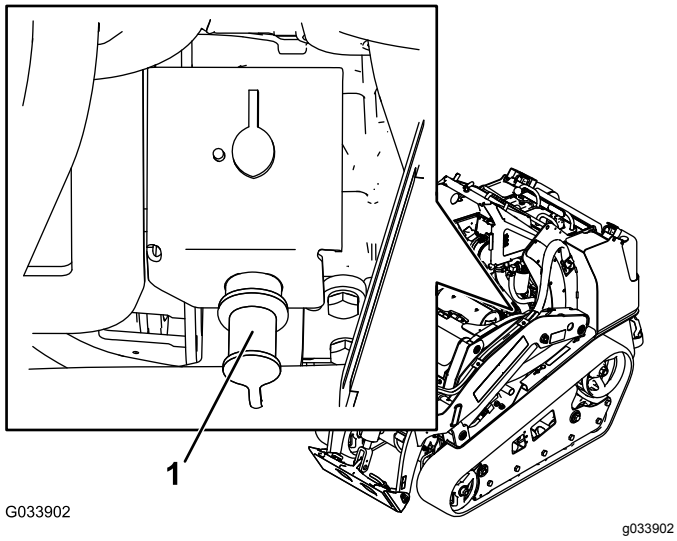

Figure 52

1. Jump post

3. Connect an end of the positive (+) jumper cable to the jump post (Figure 52).
4. Connect the other end of the positive (+) jumper cable to the positive terminal of the battery in the other machine.
5. Connect an end of the negative (-) jumper cable to the negative post of the battery in the other machine.
6. Connect the other end of the negative (-) jumper cable to a ground point, such as an unpainted bolt or chassis member.
7. Start the engine in the other machine. Let it run a few minutes, then start your engine.
8. Remove the cables in the reverse order of connection.
9. Install the cover to the jump post.

Servicing the Fuses

The electrical system is protected by fuses. It requires no maintenance; however, if a fuse blows, check the component/circuit for a malfunction or a short. Figure 53 illustrates the fuse block and identifies the fuse positions.

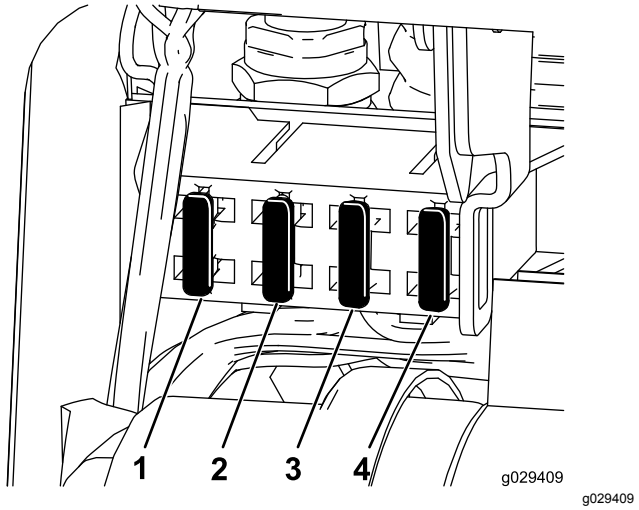

Figure 53

1. Fuse (10 A)
2. Fuse (15 A)
3. Fuse (15 A)
4. Fuse (10 A)

Note: If the machine does not start, either the main circuit or the control panel/relay fuse could be blown.

There is also a fuse (50 A) located on the right side of the machine. Raise the loader arms, install the cylinder lock, and remove the right access cover. The fuse is located just inside the frame.

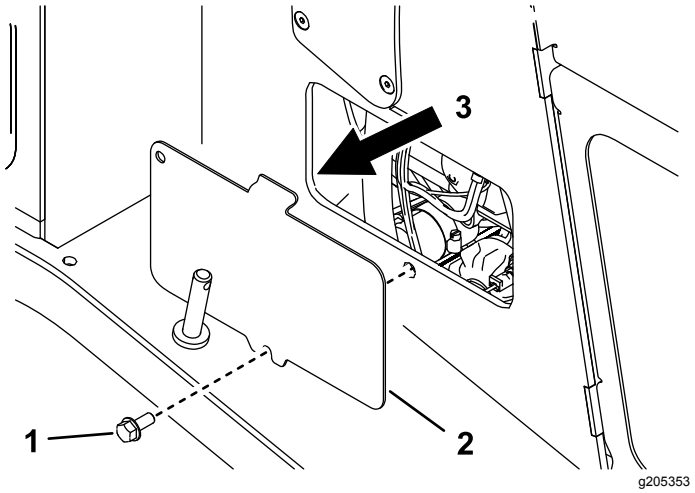

Figure 54

1. Bolt
2. Right access cover
3. Fuse location

Drive System Maintenance

Servicing the Tracks

Service Interval: After the first 8 hours—Check and adjust the track tension.

After the first 50 hours—Check and adjust the track tension.

Every 50 hours—Check and adjust the track tension.

Before each use or daily—Clean the tracks.

Before each use or daily—Check the tracks for excessive wear and proper tension.

Cleaning the Tracks

1. Park the machine on a level surface and engage the parking brake.
2. With the bucket installed and pointing down, lower it into the ground so that the front of the traction unit lifts off the ground a few centimeters (inches).
3. Shut off the engine and remove the key.
4. Using a water hose or pressure washer, remove dirt from each track system.

Important: **Ensure that you use high-pressure water to wash only the track area. Do not use a high-pressure washer to clean the rest of the traction unit. Do not use high pressure water between the drive sprocket and the traction unit or you may damage the motor seals. High-pressure washing can damage the electrical system and hydraulic valves or deplete grease.**

Important: **Ensure that you fully clean the road wheels, the front wheel, and the drive sprocket (Figure 55). The road wheels should rotate freely when clean.**

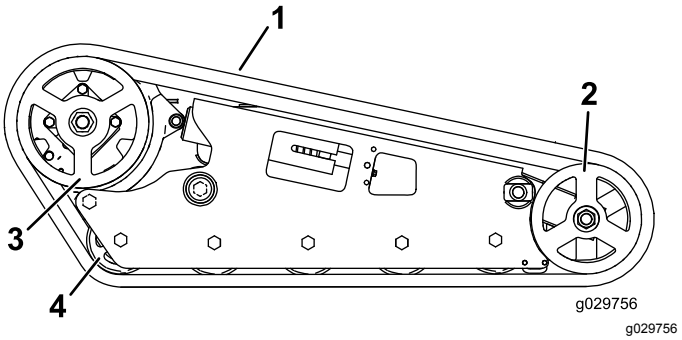

Figure 55

1. Track
2. Front wheel
3. Drive sprocket
4. Road wheel

Adjusting the Track Tension

Verify that the tension block is aligned with the green guide on the decal or that the block is 1.3 cm (1/2 inch) away from the rear of the tension tube slot (Figure 56). If it is not, adjust the track tension using the following procedure:

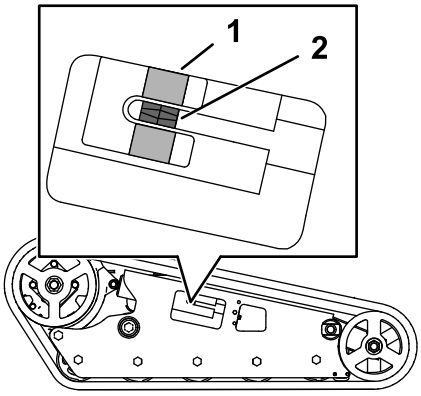

g203962

Figure 56

1. Green guide on decal
2. Tension block

1. Park the machine on a level surface, engage the parking brake, and lower the loader arms.
2. Shut off the engine and remove the key.
3. Remove the locking bolt and nut (Figure 57).

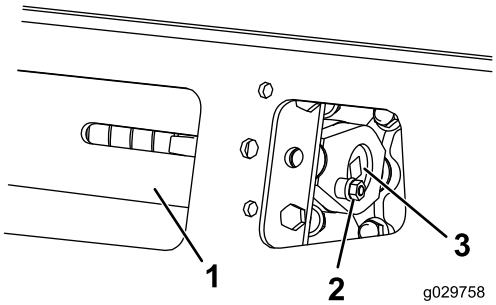

g029758

g029758

Figure 57

1. Tension tube
2. Locking bolt
3. Tensioning screw

4. Using a 1/2 inch drive ratchet, turn the tensioning screw counter-clockwise until the tension block aligns with the green guide on the decal or is 1.3 cm (1/2 inch) away from the rear of the tension tube slot (Figure 56).
5. Align the closest notch in the tension screw to the locking-bolt hole and secure the screw with the locking bolt and nut (Figure 57).
6. Repeat the procedure for the other track.
7. Drive the machine, then park the machine on a level surface, engage the parking brake, shut off the engine, and remove the key.
8. Verify that the tension block aligns with the green guide of the decal or is 1.3 cm (1/2 inch) away from the rear of the tension tube for both tracks (Figure 56). Adjust if necessary.

Replacing Narrow-Width Tracks

Replace the tracks when they are badly worn.

Note: You have narrow-width tracks if the tracks are less than 15.5 cm (6 inches) wide.

1. Park the machine on a level surface, engage the parking brake, and lower the loader arms.
2. Shut off the engine and remove the key.
3. Lift/support the the machine that you will work on so that the track is 7.6 to 10 cm (3 to 4 inches) off the ground.
4. Remove the locking bolt and nut (Figure 57).
5. Using a 1/2-inch drive ratchet, release the drive tension by turning the tensioning screw clockwise (Figure 57 and Figure 58).

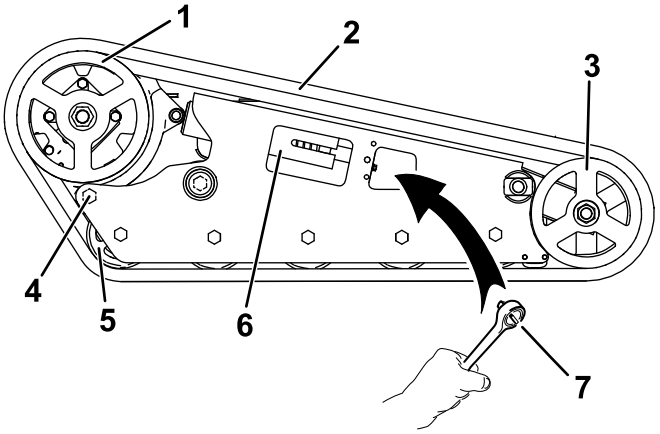

g029759

g029759

Figure 58

1. Drive sprocket
2. Track
3. Front wheel
4. Rear bolt
5. Road wheel
6. Pivot tensioner
7. Ratchet (1/2 inch)

6. Loosen the rear bolt, near the drive wheel (Figure 58).

   Note: This enables the drive wheel to pivot forward and release the tension of the track. If it does not pivot, turn on the engine and briefly move the traction control forward.
7. Remove the track at the top of the front wheel, peeling it off the wheel while rotating the track forward.
8. When the track is off the front wheel, remove it from the drive sprocket and road wheels (Figure 58).

9. Wrap the track around the front wheel (Figure 58).
10. Push the track under and between the road wheels (Figure 58).
11. Coil the tracks around the drive sprocket (Figure 58).
12. Start the engine and drive the traction rearward while pushing the lug into the sprocket drive.
13. Using a 1/2 inch drive ratchet, turn the tensioning screw counter-clockwise until the tensioning screw bottoms out (Figure 59).

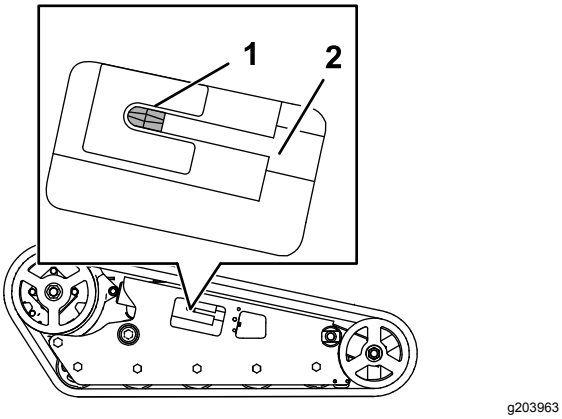

Figure 59

1. Tension nut
2. Tension screw

14. Align the closest notch in the tension screw to the locking bolt hole and secure the screw with the locking bolt and nut.
15. Torque the rear bolt to 108 to 122 N·m (80 to 90 ft-lb).
16. Lower the machine to the ground.
17. Repeat the procedure to replace the other track.
18. Drive the machine, then park the machine on a level surface, engage the parking brake, shut off the engine, and remove the key.
19. Verify that the tension block is bottomed out.

    Note: The track tension loosens after some use.
20. Adjust the track tension so that the tension block aligns with the green guide on the decal or is 1.3 cm (1/2 inch) away from the rear of the tension tube slot; refer to Adjusting the Track Tension (page 38).

Replacing Wide-Width Tracks

Replace the tracks when they are badly worn.

Note: You have wide-width tracks if the tracks are more than 23 cm (9 inches) wide.

1. Park the machine on a level surface, engage the parking brake, and lower the loader arms.
2. Shut off the engine and remove the key.
3. Lift/support the side of the unit to be worked on so that the track is 7.6 to 10 cm (3 to 4 inches) off the ground.
4. Remove the locking bolt and nut (Figure 57).
5. Using a 1/2-inch drive ratchet, release the drive tension by turning the tensioning screw clockwise (Figure 57 and Figure 58).
6. Loosen the rear bolt, near the drive wheel (Figure 58).
7. Remove the nut securing the outer front wheel and remove the wheel (Figure 60).

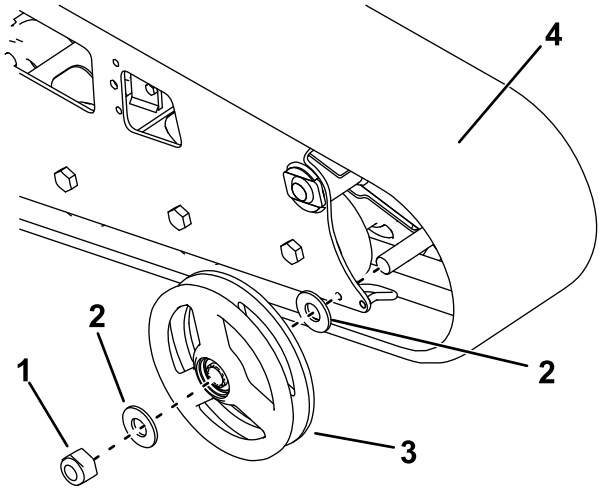

Figure 60

1. Nut
2. Washer
3. Outer front wheel
4. Track

8. Remove the track (Figure 60).
9. Pull the 2 large washers out of the outer wheels, 1 on each side of each wheel (Figure 60).
10. Clean the old grease and dirt out of the area between where the washers were installed and the bearings inside the wheels, then fill this area on each side of each wheel with grease.
11. Install the large washers on the wheels over the grease.
12. Install the new track. (Figure 60).

    Note: Ensure that the lugs in the track fit between the spacers in the middle of the drive sprocket.

13. Install the outer front wheel and secure it with the nut removed previously (Figure 60).
14. Torque the nut to 300 ft-lb (407 N·m).
15. Turn the tensioning screw counter-clockwise until the tensioning screw bottoms out.
16. Align the closest notch in the tension screw to the locking bolt hole and secure the screw with the locking bolt and nut.
17. Torque the rear bolt to 108 to 122 N·m (80 to 90 ft-lb).
18. Lower the machine to the ground.
19. Repeat the procedure to replace the other track.
20. Drive the machine, then park the machine on a level surface, engage the parking brake, shut off the engine, and remove the key.
21. Verify that the tension block is bottomed out (Figure 59).

    Note: The track tension loosens after some use.
22. Adjust the track tension so that the tension block aligns with the green guide on the decal or is 1.3 cm (1/2 inch) away from the rear of the tension tube slot; refer to Adjusting the Track Tension (page 38).

Cooling System Maintenance

Cooling System Safety

- Swallowing engine coolant can cause poisoning; keep out of reach from children and pets.
- Discharge of hot, pressurized coolant or touching a hot radiator and surrounding parts can cause severe burns.
  - Always allow the engine to cool at least 15 minutes before removing the radiator cap.
  - Use a rag when opening the radiator cap, and open the cap slowly to allow steam to escape.

Servicing the Cooling System

Service Interval: Before each use or daily—Clean the screen, oil cooler, and front of the radiator (more often in dirty or dusty conditions).

Before each use or daily—Check the coolant level in the expansion tank.

Every 100 hours—Check the cooling system hoses.

Yearly—Change the engine coolant (Authorized Service Dealer only).

Cleaning the Radiator Screen

Service Interval: Before each use or daily

Remove any buildup of grass, dirt or other debris from the radiator screen with compressed air.

Checking the Engine-Coolant Level

The cooling system is filled with a 50/50 solution of water and permanent ethylene-glycol antifreeze.

1. Park the machine on a level surface, lower the loader arms, engage the parking brake, and shut off the engine.
2. Remove the key from the key switch and allow the engine to cool.
3. Check the coolant level in the expansion tank (Figure 61).

   The coolant level should be at or above the mark on the side of the tank.

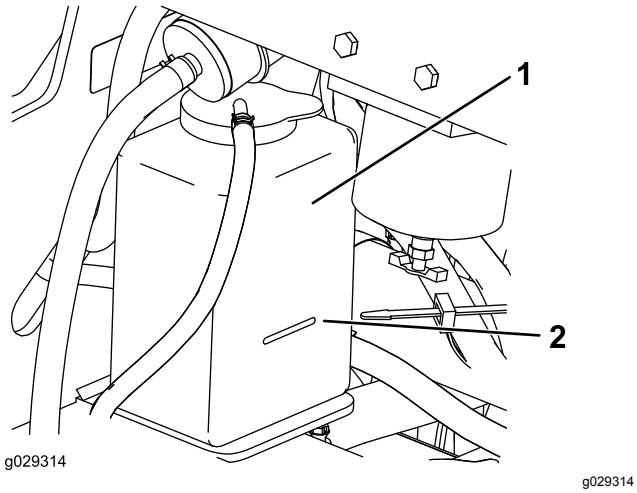

Figure 61

1. Expansion tank
2. Full mark

4. If the coolant level is low, remove the expansion tank cap and add a 50/50 mixture of water and permanent ethylene-glycol antifreeze.

   Important: **Do not overfill the expansion tank.**

5. Install the expansion-tank cap.

Changing the Engine Coolant

Service Interval: Yearly

Have an Authorized Service Dealer change the engine coolant yearly.

If you need to add engine coolant, refer to Checking the Engine-Coolant Level (page 40).

Brake Maintenance

Testing the Parking Brake

Service Interval: Before each use or daily

1. Engage the parking-brake; refer to Parking-Brake Lever (page 13).
2. Start the engine.
3. Slowly attempt to drive the machine forward or rearward.
4. If the machine moves, contact your Authorized Service Dealer for service.

Controls System Maintenance

Adjusting the Controls

The factory adjusts the controls before shipping the machine. However, after many hours of use, you may need to adjust the traction control alignment, the NEUTRAL position of the traction control, and the tracking of the traction control in the full forward position.

Contact your Authorized Service Dealer to adjust the controls of your machine.

Hydraulic System Maintenance

Hydraulic System Safety

- Seek immediate medical attention if fluid is injected into skin. Injected fluid must be surgically removed within a few hours by a doctor.
- Ensure that all hydraulic-fluid hoses and lines are in good condition and all hydraulic connections and fittings are tight before applying pressure to the hydraulic system.
- Keep your body and hands away from pinhole leaks or nozzles that eject high-pressure hydraulic fluid.
- Use cardboard or paper to find hydraulic leaks.
- Safely relieve all pressure in the hydraulic system before performing any work on the hydraulic system.

Hydraulic Fluid Specifications

Hydraulic-Tank Capacity: 37.9 L (10 US gallons)

Use only 1 of the following fluids in the hydraulic system:

- **Toro Premium Transmission/Hydraulic Tractor Fluid** (refer to your Authorized Service Dealer for more information)
- **Toro Premium All Season Hydraulic Fluid** (refer to your Authorized Service Dealer for more information)
- If either of the above Toro fluids are not available, you may use another **Universal Tractor Hydraulic Fluid (UTHF**), but they must be only **conventional, petroleum-based** products. The specifications must fall within the listed range for all the following material properties and the fluid should meet the listed industry standards. Check with your hydraulic fluid supplier to determine if the fluid meets these specifications.

  Note: Toro will not assume responsibility for damage caused by improper substitutions, so use only products from reputable manufacturers who will stand behind their recommendations.

Material Properties	
Viscosity, ASTM D445	cSt at 40°C: 55 to 62
	cSt at 100°C: 9.1 to 9.8
Viscosity index, ASTM D2270	140 to 152
Pour Point, ASTM D97	-37 to -43°C (-35 to -46°F)

Industry Standards
API GL-4, AGCO Powerfluid 821 XL, Ford New Holland FNHA-2-C-201.00, Kubota UDT, John Deere J20C, Vickers 35VQ25 and Volvo WB-101/BM

Note: Many hydraulic fluids are almost colorless, making it difficult to spot leaks. A red dye additive for the hydraulic system fluid is available in 20 ml (2/3 fl oz) bottles. One bottle is sufficient for 15 to 22 L (4 to 6 US gallons) of hydraulic fluid. Order Part No. 44-2500 from your Authorized Toro Dealer.

Checking the Hydraulic-Fluid Level

Service Interval: Every 25 hours

Important: **Always use the correct hydraulic fluid. Unspecified fluids will damage the hydraulic system. Refer to Hydraulic Fluid Specifications (page 42).**

1. Remove any attachments.
2. Park the machine on a level surface.
3. Raise the loader arms and install the cylinder locks.
4. Shut off the engine and remove the key.
5. Open the hood and secure the prop rod.
6. Remove the right side screen.
7. Clean the area around the filler neck of the hydraulic tank (Figure 62).

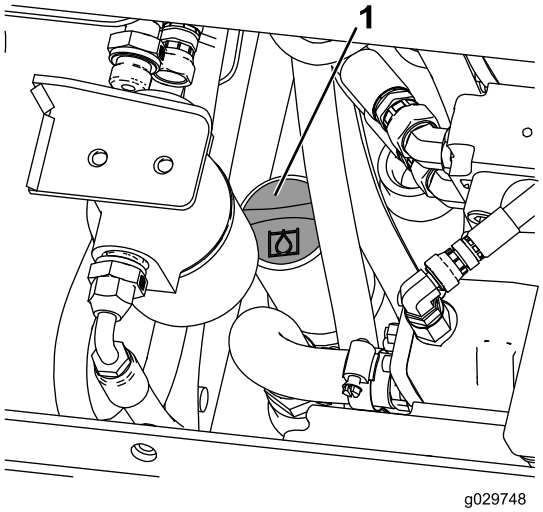

g029748

Figure 62

1. Filler-neck cap

8. Remove the filler-neck cap and check the fluid level on the dipstick (Figure 63).

Note: The fluid level should be between the 2 notches of the dipstick while the arms are lowered or at the lower notch while the arms are raised.

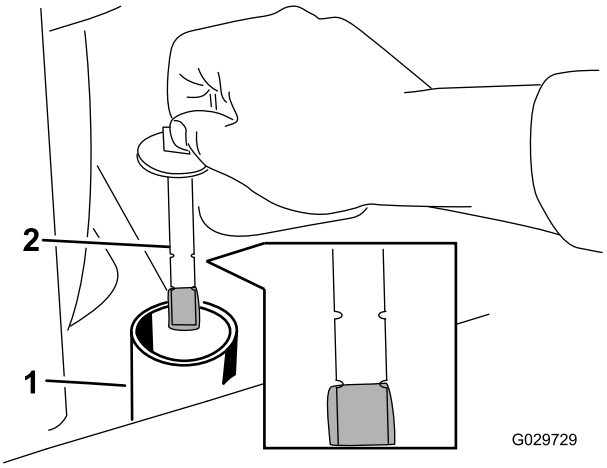

g029729

Figure 63

1. Filler neck
2. Dipstick

9. If the level is low, add enough fluid to raise it to the proper level.
10. Install the filler-neck cap.
11. Install the side screen.
12. Close the hood.
13. Remove and store the cylinder locks and lower the loader arms.

Replacing the Hydraulic Filter

Service Interval: After the first 8 hours

Every 200 hours

Important: **Do not substitute an automotive oil filter or severe hydraulic system damage may result.**

1. Park the machine on a level surface, engage the parking brake, and lower the loader arms.
2. Shut off the engine and remove the key.
3. Open the hood and secure the prop rod.
4. Place a drain pan under the filter and replace the filter (Figure 64).

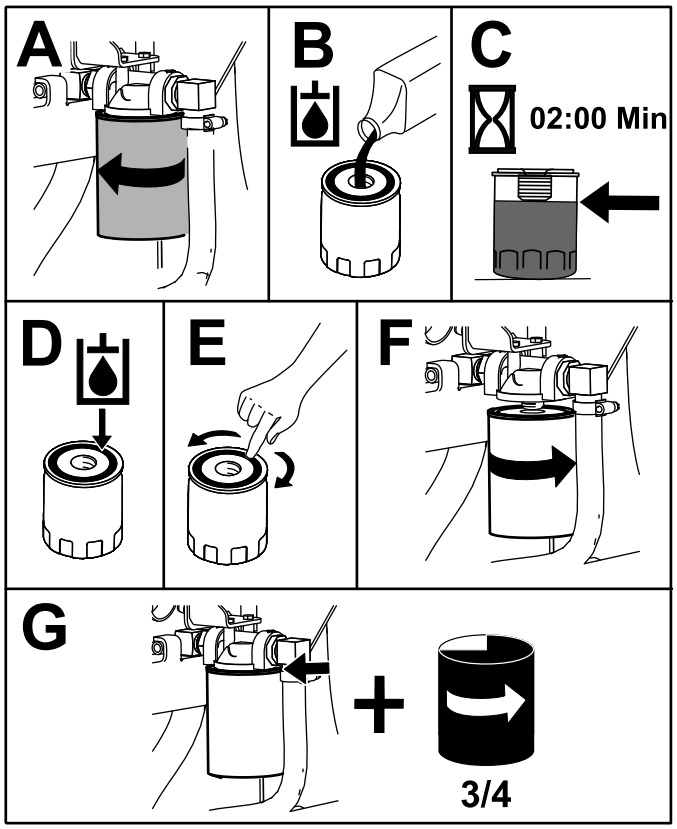

Figure 64

5. Clean up any spilled fluid.
6. Start the engine and let it run for about 2 minutes to purge air from the system.
7. Shut off the engine and check for leaks.
8. Check the fluid level in the hydraulic tank; refer to Checking the Hydraulic-Fluid Level (page 43) and add fluid to raise the level to mark on dipstick.

   Important: **Do not over fill the tank.**
9. Close the hood.

Changing the Hydraulic Fluid

Service Interval: Every 400 hours/Yearly (whichever comes first)

1. Park the machine on a level surface.
2. Raise the loader arms and install the cylinder locks.
3. Shut off the engine, remove the key, and allow the engine to cool.
4. Open the hood and secure the hood prop.
5. Remove the right side screen; refer to Removing the Side Screens (page 26).
6. Remove the hydraulic-tank cap and dipstick (Figure 65).

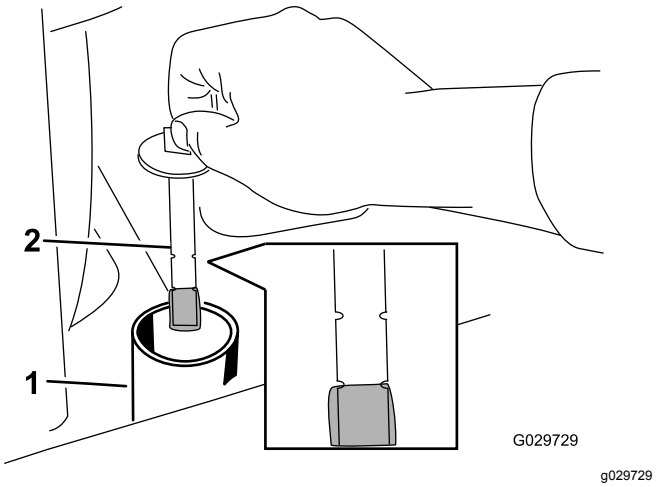

Figure 65

1. Filler neck
2. Dipstick

7. Place a large drain pain capable of holding 57 L (15 US gallons) under the drain plug on the front of the machine (Figure 66).

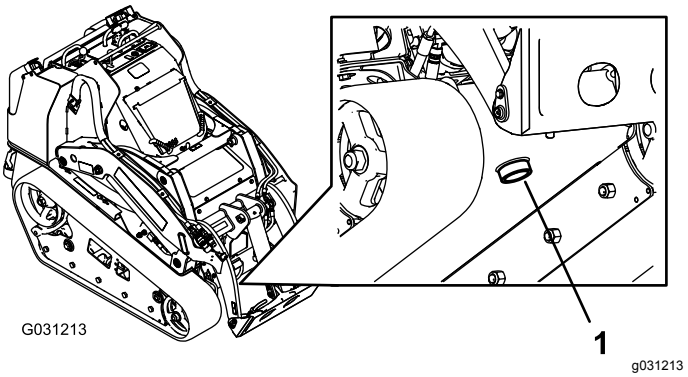

Figure 66

1. Drain plug

8. Remove the drain plug and allow the oil to drain into the pan (Figure 66).
9. When the oil is finished draining, install and tighten the drain plug.

   Note: Dispose of the used oil at a certified recycling center.
10. Fill the hydraulic tank with hydraulic fluid; refer to Hydraulic Fluid Specifications (page 42).
11. Start the engine and let it run for a few minutes.
12. Shut off the engine and remove the key.
13. Check the hydraulic-fluid level and add fluid to fill the tank if necessary; refer to Checking the Hydraulic-Fluid Level (page 43).
14. Close the hood.

Cleaning

Removing Debris

Service Interval: Before each use or daily

Important: **Operating the engine with blocked screens and/or cooling shrouds removed will result in engine damage from overheating.**

1. Park the machine on a level surface and lower the loader arms.
2. Shut off the engine, remove the key, and allow the engine to cool.
3. Open the hood and secure the prop rod.
4. Clean any debris from the front and side screens.
5. Wipe away debris from the air cleaner.
6. Clean any debris buildup on the engine and in the oil cooler fins with a brush or blower.

   Important: **Operating the engine with blocked screens and/or cooling shrouds removed will result in engine damage due to overheating.**
7. Clean debris from the hood opening, muffler, heat shields, and radiator screen (if applicable).
8. Close the hood.

Cleaning the Chassis

Service Interval: Every 100 hours—Check for dirt buildup in the chassis.

Over time, the chassis under the engine collects dirt and debris that must be removed. Using a flashlight, open the hood and inspect the area under the engine regularly. When the debris is 2.5 to 5 cm (1 to 2 inches) deep, clean the chassis.

1. Park the machine on a level surface, engage the parking brake, and lower the loader arms.
2. Raise the front of the machine so that the machine is angled backward.
3. Shut off the engine and remove the key.
4. Remove the 2 bolts securing the bottom plate and remove the bottom plate (Figure 67).

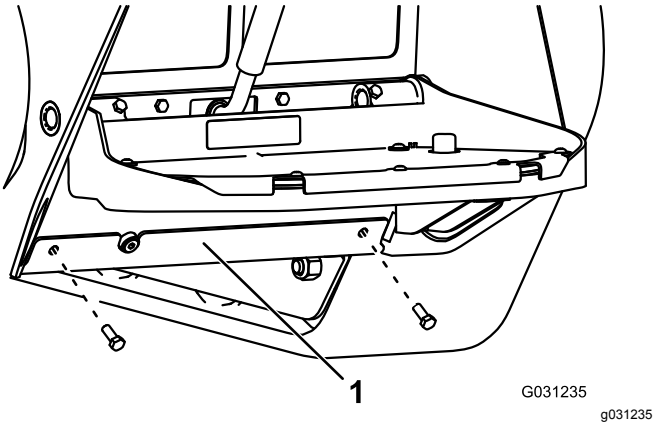

Figure 67

1. Bottom plate

5. Remove the front screen; refer to Removing the Front Screen (page 26).
6. Spray water into the chassis to clean out the dirt and debris.

   Note: The water will drain at the back of the machine.

   Important: **Do not spray water into the engine.**
7. Grease the machine; refer to Greasing the Machine (page 27).
8. Install the bottom plate (Figure 67).
9. Install the front screen.
10. Lower the machine.

Storage

Storage Safety

- Shut off the engine, remove the key, wait for all moving parts to stop, and allow the machine to cool before storing it.
- Do not store the machine or fuel near flames.

Storage

1. Park the machine on a level surface, engage the parking brake, and lower the loader arms.
2. Shut off the engine and remove the key.
3. Remove dirt and grime from the entire machine.

   Important: **You can wash the machine with mild detergent and water. Do not pressure-wash the machine. Avoid excessive use of water, especially near the control panel, engine, hydraulic pumps, and motors.**
4. Service the air cleaner; refer to Servicing the Air Cleaner (page 28).
5. Grease the machine; refer to Greasing the Machine (page 27).
6. Change the engine oil; refer to Changing the Engine Oil (page 29).
7. Charge the battery; refer to Charging the Battery (page 34).
8. Check and adjust the track tension; refer to Adjusting the Track Tension (page 38).
9. Check and tighten all fasteners. Repair or replace any worn, damaged, or missing parts.
10. Paint all scratched or bare metal surfaces with paint available from your Authorized Service Dealer.
11. Store the machine in a clean, dry garage or storage area. Remove the key from the ignition switch and keep it in a memorable place.
12. Cover the machine to protect it and keep it clean.

Troubleshooting

Problem	Possible Cause	Corrective Action
The starter does not crank.	1. The electrical connections are corroded or loose.	1. Check the electrical connections for good contact.
	2. A fuse is blown or loose.	2. Correct or replace the fuse.
	3. The battery is discharged.	3. Charge the battery or replace it.
	4. The relay or switch is damaged.	4. Contact your Authorized Service Dealer.
	5. A starter or starter solenoid is damaged.	5. Contact your Authorized Service Dealer.
	6. Internal engine components have seized.	6. Contact your Authorized Service Dealer.
	7. The safety interlock is engaged.	7. Check the neutral setting on the traction and auxiliary controls.
The engine cranks but does not start.	1. The starting procedure is incorrect.	1. Refer to Starting the Engine.
	2. The fuel tank is empty.	2. Fill the tank with fresh fuel.
	3. The fuel-shutoff valve is closed.	3. Open the fuel-shutoff valve.
	4. Dirt, water, stale fuel, or incorrect fuel is in the fuel system.	4. Drain and flush the fuel system; add fresh fuel.
	5. The fuel line is clogged.	5. Clean or replace the fuel line.
	6. There is air in the fuel.	6. Bleed the nozzles and check for air leaks at the fuel hose connections and fittings between the fuel tank and engine.
	7. The glow plugs are inoperative.	7. Check the fuse, glow plugs, and wiring.
	8. The cranking speed is slow.	8. Check the battery, oil viscosity, and starting motor (contact your Authorized Service Dealer).
	9. The air-cleaner filters are dirty.	9. Service the air filters.
	10. The fuel filter is clogged.	10. Replace the fuel filter.
	11. The improper fuel grade for cold weather is in the machine.	11. Drain the fuel system and replace the fuel filter. Add fresh fuel of proper grade for ambient temperature conditions. You may need to warm the entire traction unit.
	12. There is low compression.	12. Contact your Authorized Service Dealer.
	13. The injection nozzles are damaged.	13. Contact your Authorized Service Dealer.
	14. The injection pump timing is incorrect.	14. Contact your Authorized Service Dealer.
	15. The injection pump is damaged.	15. Contact your Authorized Service Dealer.
	16. The ETR solenoid is damaged.	16. Contact your Authorized Service Dealer.

Problem	Possible Cause	Corrective Action
The engine starts but does not keep running.	1. The fuel-tank vent is restricted.	1. Loosen the cap. If the engine runs with the cap loosened, replace the cap.
	2. Dirt or water is in the fuel system.	2. Drain and flush the fuel system; add fresh fuel.
	3. The fuel filter is clogged.	3. Replace the fuel filter.
	4. There is air in the fuel.	4. Bleed the nozzles and check for air leaks at fuel hose connections and fittings between the fuel tank and engine.
	5. Improper fuel grade for cold weather was used in the machine.	5. Drain the fuel system and replace the fuel filter. Add fresh fuel of proper grade for ambient temperature conditions.
	6. The spark-arrestor screen is clogged.	6. Clean or replace the spark-arrestor screen.
	7. The fuel pump is damaged.	7. Contact your Authorized Service Dealer.
The engine runs but knocks or misses.	1. Dirt, water, stale fuel, or incorrect fuel is in the fuel system.	1. Drain and flush the fuel system; add fresh fuel.
	2. The engine is overheating.	2. Refer to “The engine overheats.”
	3. There is air in the fuel.	3. Bleed the nozzles and check for air leaks at the fuel hose connections and fittings between the fuel tank and engine.
	4. The injection nozzles are damaged.	4. Contact your Authorized Service Dealer.
	5. There is low compression	5. Contact your Authorized Service Dealer.
	6. The injection-pump timing is incorrect.	6. Contact your Authorized Service Dealer.
	7. There is excessive carbon buildup.	7. Contact your Authorized Service Dealer.
	8. There is internal wear or damage.	8. Contact your Authorized Service Dealer.
The engine does not idle.	1. The fuel-tank vent is restricted.	1. Loosen the cap. If the engine runs with the cap loosened, replace the cap.
	2. Dirt, water, stale fuel, or incorrect fuel is in the fuel system.	2. Drain and flush the fuel system; add fresh fuel.
	3. The air-cleaner filters are dirty.	3. Service the air filters.
	4. The fuel filter is clogged.	4. Replace the fuel filter.
	5. There is air in the fuel.	5. Bleed the nozzles and check for air leaks at fuel hose connections and fittings between the fuel tank and engine.
	6. The fuel pump is damaged.	6. Contact your Authorized Service Dealer.
	7. There is low compression	7. Contact your Authorized Service Dealer.

Problem	Possible Cause	Corrective Action
The engine overheats.	1. More coolant is needed.	1. Check and add coolant.
	2. There is restricted air flow to the radiator.	2. Inspect and clean the radiator screen with every use.
	3. The crankcase-oil level is incorrect.	3. Fill or drain to the Full mark.
	4. The engine load is excessive.	4. Reduce the load; use a lower ground speed.
	5. Incorrect fuel is in the fuel system.	5. Drain and flush the fuel system; add fresh fuel.
	6. The thermostat is damaged.	6. Contact your Authorized Service Dealer.
	7. The fan belt is loose or broken.	7. Contact your Authorized Service Dealer.
	8. Injection timing is incorrect.	8. Contact your Authorized Service Dealer.
	9. The coolant pump is damaged.	9. Contact your Authorized Service Dealer.
	10. The engine rpm is too low.	10. Check the high idle speed.
The engine loses power.	1. The engine load is excessive.	1. Reduce the load; use a lower ground speed.
	2. The crankcase-oil level is incorrect.	2. Fill or drain to the Full mark.
	3. The air-cleaner filters are dirty.	3. Service the air filters.
	4. Dirt, water, stale fuel, or incorrect fuel is in the fuel system.	4. Drain and flush the fuel system; add fresh fuel.
	5. The engine is overheating.	5. Refer to “The engine overheats.”
	6. The spark-arrestor screen is clogged.	6. Clean or replace the spark-arrestor screen.
	7. There is air in the fuel.	7. Bleed the nozzles and check for air leaks at fuel hose connections and fittings between the fuel tank and engine.
	8. There is low compression	8. Contact your Authorized Service Dealer.
	9. The fuel-tank vent is restricted.	9. Contact your Authorized Service Dealer.
	10. The injection-pump timing is incorrect.	10. Contact your Authorized Service Dealer.
	11. The injection pump is damaged.	11. Contact your Authorized Service Dealer.
	12. The engine high idle speed is too low.	12. Contact your Authorized Service Dealer.
Exhaust produces excessive black smoke.	1. The engine load is excessive.	1. Reduce the load; use a lower ground speed.
	2. The air-cleaner filters are dirty.	2. Service the air filters.
	3. Incorrect fuel is in the fuel system.	3. Drain and flush the fuel system; add fresh fuel.
	4. The injection-pump timing is incorrect.	4. Contact your Authorized Service Dealer.
	5. The injection pump is damaged.	5. Contact your Authorized Service Dealer.
	6. The injection nozzles are damaged.	6. Contact your Authorized Service Dealer.

Problem	Possible Cause	Corrective Action
Exhaust produces excessive white smoke.	1. The key was turned to the START position before the glow-plug light turned off.	1. Turn the key to the RUN position and allow the glow-plug light to turn off before starting the engine.
	2. The engine temperature is low.	2. Check the thermostat.
	3. The glow plugs are inoperative.	3. Check the fuse, glow plugs, and wiring.
	4. The injection-pump timing is incorrect.	4. Contact your Authorized Service Dealer.
	5. The injection nozzles are damaged.	5. Contact your Authorized Service Dealer.
	6. There is low compression.	6. Contact your Authorized Service Dealer.
The machine does not drive.	1. The parking brake is engaged.	1. Disengage the parking brake.
	2. The hydraulic-fluid level is low.	2. Add hydraulic fluid to the reservoir.
	3. The hydraulic system is damaged.	3. Contact your Authorized Service Dealer.
	4. The tow valves are open.	4. Close the tow valves.
	5. The flow-divider valve lever is in 9 o'clock position.	5. Move the lever to the 12 o'clock to 10 o'clock position.
	6. A traction pump drive coupler is loose or broken.	6. Contact your Authorized Service Dealer.
	7. Pump and/or wheel motor is damaged.	7. Contact your Authorized Service Dealer.
	8. The control valve is damaged.	8. Contact your Authorized Service Dealer.
	9. The relief valve is damaged.	9. Contact your Authorized Service Dealer.

Schematics

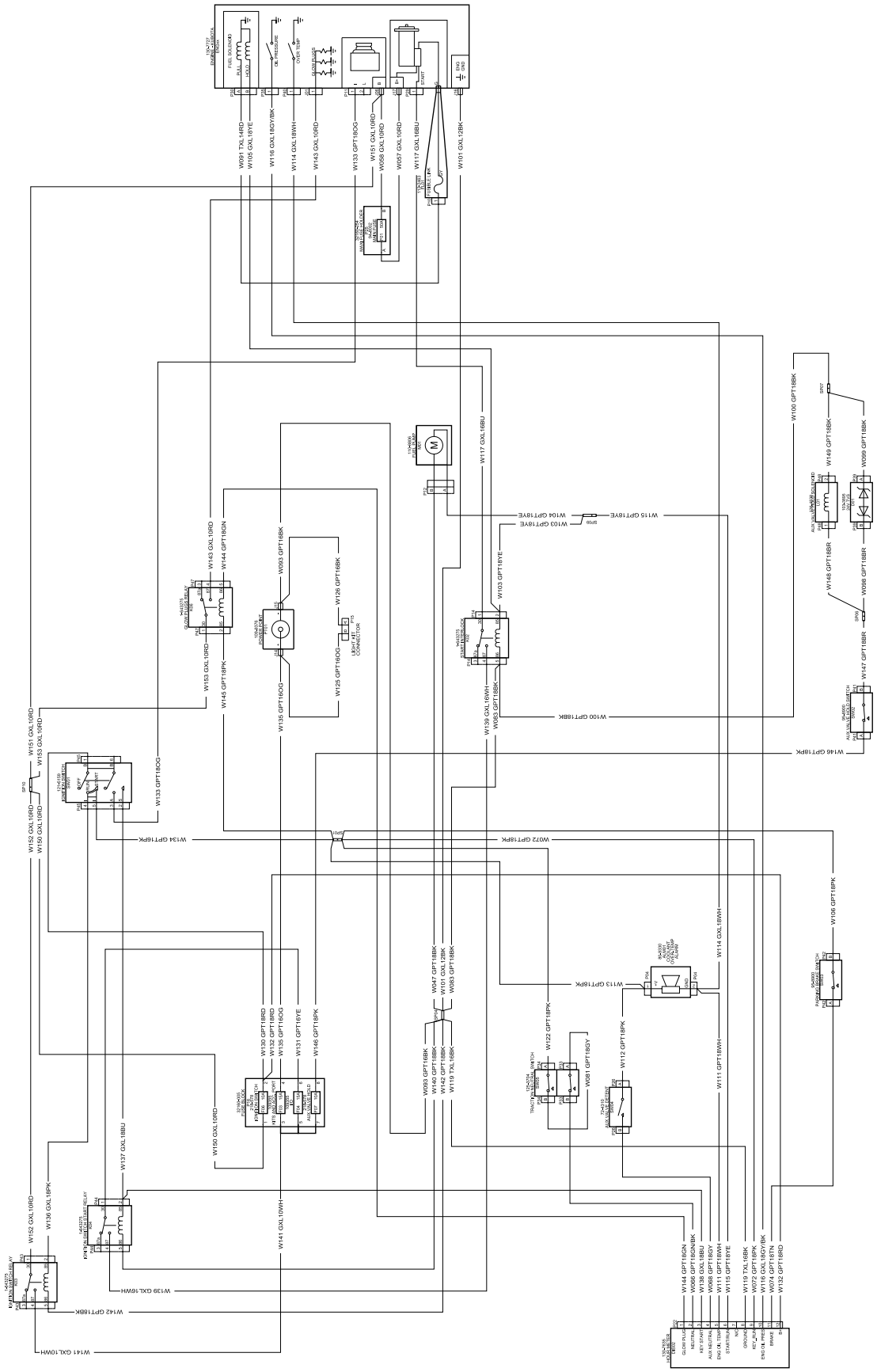

Electrical Schematic (Rev. B)

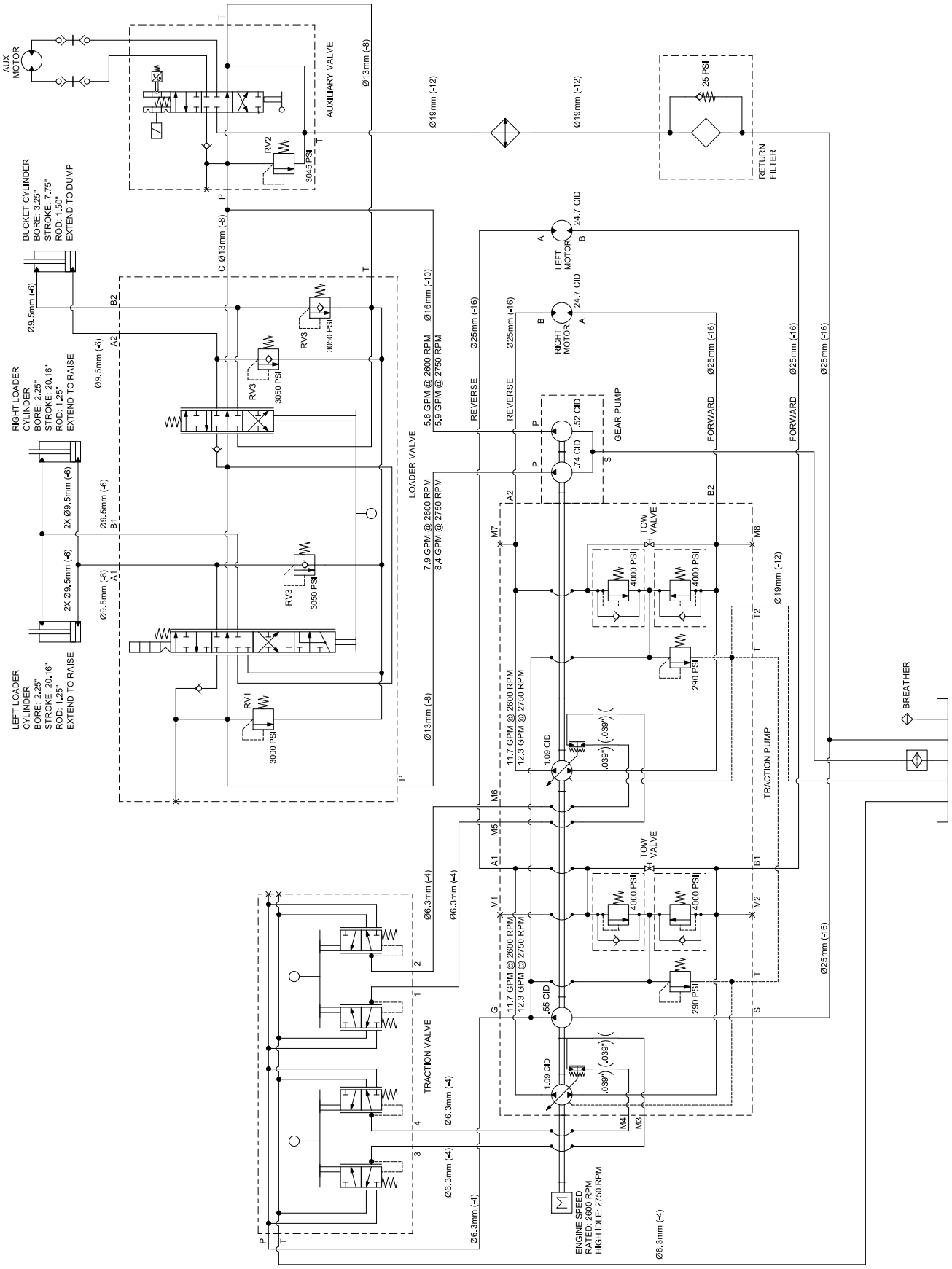

Hydraulic Schematic (Rev. C)

Notes:

Notes:

European Privacy Notice

The Information Toro Collects
Toro Warranty Company (Toro) respects your privacy. In order to process your warranty claim and contact you in the event of a product recall, we ask you to share certain personal information with us, either directly or through your local Toro company or dealer.

The Toro warranty system is hosted on servers located within the United States where privacy law may not provide the same protection as applies in your country.

BY SHARING YOUR PERSONAL INFORMATION WITH US, YOU ARE CONSENTING TO THE PROCESSING OF YOUR PERSONAL INFORMATION AS DESCRIBED IN THIS PRIVACY NOTICE.

The Way Toro Uses Information
Toro may use your personal information to process warranty claims, to contact you in the event of a product recall and for any other purpose which we tell you about. Toro may share your information with Toro's affiliates, dealers or other business partners in connection with any of these activities. We will not sell your personal information to any other company. We reserve the right to disclose personal information in order to comply with applicable laws and with requests by the appropriate authorities, to operate our systems properly or for our own protection or that of other users.

Retention of your Personal Information
We will keep your personal information as long as we need it for the purposes for which it was originally collected or for other legitimate purposes (such as regulatory compliance), or as required by applicable law.

Toro's Commitment to Security of Your Personal Information
We take reasonable precautions in order to protect the security of your personal information. We also take steps to maintain the accuracy and current status of personal information.

Access and Correction of your Personal Information
If you would like to review or correct your personal information, please contact us by email at legal@toro.com.

Australian Consumer Law

Australian customers will find details relating to the Australian Consumer Law either inside the box or at your local Toro Dealer.

California Proposition 65 Warning Information

What is this warning?

You may see a product for sale that has a warning label like the following:

WARNING: Cancer and Reproductive Harm—www.p65Warnings.ca.gov.

What is Prop 65?

Prop 65 applies to any company operating in California, selling products in California, or manufacturing products that may be sold in or brought into California. It mandates that the Governor of California maintain and publish a list of chemicals known to cause cancer, birth defects, and/or other reproductive harm. The list, which is updated annually, includes hundreds of chemicals found in many everyday items. The purpose of Prop 65 is to inform the public about exposure to these chemicals.

Prop 65 does not ban the sale of products containing these chemicals but instead requires warnings on any product, product packaging, or literature with the product. Moreover, a Prop 65 warning does not mean that a product is in violation of any product safety standards or requirements. In fact, the California government has clarified that a Prop 65 warning "is not the same as a regulatory decision that a product is 'safe' or 'unsafe.'" Many of these chemicals have been used in everyday products for years without documented harm. For more information, go to https://oag.ca.gov/prop65/faqs-view-all.

A Prop 65 warning means that a company has either (1) evaluated the exposure and has concluded that it exceeds the "no significant risk level"; or (2) has chosen to provide a warning based on its understanding about the presence of a listed chemical without attempting to evaluate the exposure.

Does this law apply everywhere?

Prop 65 warnings are required under California law only. These warnings are seen throughout California in a wide range of settings, including but not limited to restaurants, grocery stores, hotels, schools, and hospitals, and on a wide variety of products. Additionally, some online and mail order retailers provide Prop 65 warnings on their websites or in catalogs.

How do the California warnings compare to federal limits?

Prop 65 standards are often more stringent than federal and international standards. There are various substances that require a Prop 65 warning at levels that are far lower than federal action limits. For example, the Prop 65 standard for warnings for lead is 0.5 µg/day, which is well below the federal and international standards.

Why don't all similar products carry the warning?

- Products sold in California require Prop 65 labelling while similar products sold elsewhere do not.
- A company involved in a Prop 65 lawsuit reaching a settlement may be required to use Prop 65 warnings for its products, but other companies making similar products may have no such requirement.
- The enforcement of Prop 65 is inconsistent.
- Companies may elect not to provide warnings because they conclude that they are not required to do so under Prop 65; a lack of warnings for a product does not mean that the product is free of listed chemicals at similar levels.

Why does Toro include this warning?

Toro has chosen to provide consumers with as much information as possible so that they can make informed decisions about the products they buy and use. Toro provides warnings in certain cases based on its knowledge of the presence of one or more listed chemicals without evaluating the level of exposure, as not all the listed chemicals provide exposure limit requirements. While the exposure from Toro products may be negligible or well within the "no significant risk" range, out of an abundance of caution, Toro has elected to provide the Prop 65 warnings. Moreover, if Toro does not provide these warnings, it could be sued by the State of California or by private parties seeking to enforce Prop 65 and subject to substantial penalties.