FORM NO. 3321–742

TORO®

MODEL NO. 30568 – 90001 & UP
MODEL NO. 30568TE – 90001 & UP

OPERATOR'S MANUAL

52" REAR DISCHARGE CUTTING DECK

FOR GROUNDSMASTER 200 SERIES TRACTION UNITS

To assure maximum safety, optimum performance, and to gain knowledge of the product, it is essential that you or any other operator of the machine read and understand the contents of this manual before the engine is ever started. Pay particular attention to the SAFETY INSTRUCTIONS highlighted by this symbol —

The safety alert symbol means CAUTION, WARNING or DANGER — personal safety instruction. Failure to comply with the instruction may result in personal injury.

TORO®
THIS UNIT CONFORMS TO ANSI/OPEI B71.4–1990

The Groundsmaster 200 Series Traction unit with a 52" Rear Discharge Deck conforms to the American National Standards Institute's for Riding Mowers when weights are installed per instructions in Traction Unit Operator's Manual.



© The TORO Company – 1998

FOREWORD

The 52” cutting deck has advanced concepts in engineering, design and safety; and if maintained properly, will give excellent service.

Since this is a high−quality product, Toro is concerned about the future use of the machine and safety of the user. Therefore, read this manual to familiarize yourself with proper set−up, operation and maintenance instructions. The major sections of the manual are:

1. Safety Instructions
2. Set−up Instructions
3. Before Operating
4. Lubrication
5. Maintenance

Certain information in this manual is emphasized. DANGER, WARNING and CAUTION identify personal safety related information. IMPORTANT identifies mechanical information demanding special attention. Be sure to read this directive because it deals with the possibility of damaging a part or parts of the machine. NOTE identifies general information worthy of special attention.

TABLE OF CONTENTS

	Page
SAFETY INSTRUCTIONS	3−4
SAFETY AND INSTRUCTION DECALS	5
SPECIFICATIONS	6
LOOSE PARTS	6
SET−UP INSTRUCTIONS	7−11
Install Lift Arms	7
Install Carrier Frame	7
Install Cutting Unit	8
Install Weight Transfer Kit	9
Install Rear Weight	10
BEFORE OPERATING	11
Adjusting Height−of−Cut	11
Check Lubricant In Gear Box	11
OPERATING INSTRUCTIONS	11
Tension Spring Adjustment	11
LUBRICATION	12
Grease Bearings And Bushings	12
MAINTENANCE	13−19
Trouble Shooting	13
Separating Cutting Unit From Traction Unit	14
Servicing Bushings in Castor Arms	14
Servicing Castor Wheel and Bearing	15
Checking for Bent Blade	15
Replacing Cutter Blade	15
Checking Sail and Sharpening Cutter Blade	16
Correcting Cutting Unit Mismatch	16
Adjusting Idler Pulley	17
Replacing Drive Belt	18
IDENTIFICATION AND ORDERING	19
MAINTENANCE CHART	19
THE TORO PROMISE	Back Cover

SAFETY INSTRUCTIONS

The safety alert symbol means CAUTION, WARNING or DANGER — "personal safety instruction". Read and under stand the instruction because it has to do with safety. Failure to comply with the instruction may result in personal injury.

The cutting unit has been tested and certified for compliance with the B71.4−1990 specifications of the American National Standards Institute. Although hazard control and accident prevention are dependent upon the awareness, concern, and proper training of the personnel involved in the operation, transport, maintenance, and storage of the machine. Improper use or maintenance of the machine can result in injury or death. To reduce the potential for injury or death, comply with the following safety instructions.

BEFORE OPERATING

1. Read and understand the contents of this Operator's Manual before operating the machine. Become familiar with all controls and know how to stop quickly. A free replacement manual is available by sending complete Model and Serial Number to:

The Toro Company
8111 Lyndale Avenue South
Bloomington, Minnesota 55420−1196

2. Never allow children to operate the machine. Do not allow adults to operate machine without proper instruction. Only trained operators who have read this manual should operate this machine.

3. Never operate the machine when under the influence of drugs or alcohol.

4. Remove all debris or other objects that might be picked up and thrown by the cutter blades. Keep all bystanders away from the mowing area.

5. Keep all shields and safety devices in place. If a shield, safety device or decal is illegible or damaged, repair or replace it before operation is commenced. Also tighten any loose nuts, bolts and screws to assure machine is in safe operating condition.

6. Do not operate machine while wearing sandals, tennis shoes, sneakers or shorts. Also, do not wear loose fitting clothing which could get caught in moving parts. Always wear long pants and substantial shoes. Wearing safety glasses, safety shoes and a helmet is advisable and required by some local ordinances and insurance regulations.

7. Check interlock switches daily for proper operation (Refer To Section in Traction Unit Operator's Manual on Checking Interlock Switches). Do not rely entirely on safety switches -shut off engine before getting off seat. If a switch fails, replace it before operating the machine. The interlock system is for your protection, so do not bypass it. Replace all interlock switches every two years. Interlock switches should be adjusted so:

A. Engine cannot be started unless traction pedal is released (neutral position) and PTO lever is DISENGAGED (off position).

B. Engine stops if operator gets off seat when traction pedal is depressed.

C. Engine stops if operator gets off seat when PTO lever is ENGAGED (on position).

8. Fill fuel tank before starting the engine. Avoid spilling fuel. Since fuel is flammable, handle it carefully.

A. Use an approved fuel container.

B. Do not fill tank while engine is hot or running.

C. Do not smoke while handling fuel.

D. Fill fuel tank outdoors and up to about one inch (25 mm) from top of the tank, not the filler neck.

E. Wipe up any spilled fuel.

WHILE OPERATING

9. Do not run the engine in a confined area without adequate ventilation. Exhaust fumes are hazardous and could possibly be deadly.

10. Maximum seating capacity is one person. Never carry passengers.

11. Sit on the seat when starting the engine and operating the machine.

12. Before starting the engine:

A. Engage parking brake.

B. Ensure traction pedal is in neutral and PTO is in the OFF, disengaged position.

C. After engine is started, release parking brake and keep foot off traction pedal. Machine must not move. If movement is evident, the neutral return mechanism is adjusted incorrectly; therefore, shut engine off and adjust until machine does not move when traction pedal is released.

13. Using the machine demands attention, and to prevent loss of control:

A. Mow only in daylight or when there is good artificial light.

B. Watch for holes or other hidden hazards.

C. Do not drive close to a sand trap, ditch, creek or other hazard.

D. Reduce speed when making sharp turns and when turning on hillsides.

E. Avoid sudden starts and stops.

SAFETY INSTRUCTIONS

F. Before backing up, look to the rear and assure no one is behind the machine.

G. Watch out for traffic when near or crossing roads. Always yield the right−of −way.

14. Never raise the cutting unit while the blades are rotating.

15. If the cutting blades strike a solid object or the machine vibrates abnormally, shut the engine off. Remove spark plug wire from spark plug to prevent possibility of accidental starting. Check cutting unit and traction unit for damage and malfunctioning parts. Repair any damage before restarting the engine and operating the cutting unit. Be sure blades are in good condition and blade bolts are tight.

16. Cut grass slopes carefully. Do not start, stop, or turn suddenly.

17. Do not touch engine or muffler while engine is running or soon after it is stopped. These areas could be hot enough to cause a burn.

18. Before getting off the seat:

A. Move traction pedal to neutral position and remove foot from pedal.

B. Set the parking brake and disengage the PTO.

C. Shut the engine off and remove the key from the ignition switch. Wait for all movement to stop before getting off the seat.

19. Lower the cutting unit to the ground and remove key from ignition switch whenever machine is left unattended.

MAINTENANCE

20. Remove key from ignition switch to prevent accidental starting of the engine when servicing, adjusting or storing the machine.

21. Perform only those maintenance instructions described in this manual. If major repairs are ever needed or assistance is desired, contact an Authorized TORO Distributor.

22. To reduce potential fire hazard, keep the engine free of excessive grease, grass, leaves and accumulations of dirt.

23. Be sure machine is in safe operating condition by keeping nuts, bolts and screws tight. Check the blade mounting bolts and nuts frequently to be sure they are tightened to specification.

24. Make sure all hydraulic line connectors are tight, and all hydraulic hoses and lines are in good condition before applying pressure to the system.

25. Keep body and hands away from pin hole leaks in hydraulic lines that eject high pressure hydraulic fluid. Use cardboard or paper to find hydraulic leaks. Hydraulic fluid escaping under pressure can penetrate skin and cause injury. Fluid accidentally injected into the skin must be surgically removed within a few hours by a doctor familiar with this form of injury or gangrene may result.

26. Before disconnecting or performing any work on the hydraulic system, all pressure in system must be relieved by stopping engine and lowering cutting unit to the ground.

27. If the engine must be running to perform a maintenance adjustment, keep hands, feet, clothing and other parts of the body away from the cutting unit blades and other moving parts.

28. Do not overspeed the engine by changing governor settings. To be sure of safety and accuracy, have an Authorized TORO Distributor check maximum engine speed with a tachometer.

29. Engine must be shut off before checking oil or adding oil to the crankcase.

30. Allow engine to cool before storing mower in any enclosure such as a garage or storage shed. Make sure the mower fuel tank is empty if machine is to be stored in excess of 30 days. Do not store mower near any open flame or where gasoline fumes may be ignited by a spark. Always store gasoline in a safety−approved, red metal container.

31. To ensure optimum performance and safety, always purchase genuine TORO replacement parts and accessories to keep the Toro all TORO. NEVER USE “WILL−FIT” REPLACEMENT PARTS AND ACCESSORIES MADE BY OTHER MANUFACTURERS. Look for the TORO logo to assure genuineness. Using unapproved replacement parts and accessories could void the warranty of The Toro Company.

SAFETY AND INSTRUCTION DECALS

The following decals are installed on the machine. If any become damaged or illegible, replace it. The decal part number is listed below and in your parts catalog. Replacement can be ordered from your Authorized Toro Distributor.



ON BOTH SIDES OF CUTTING UNIT
(Part No. 66–1340)
(Part No. 93–7824 for CE)

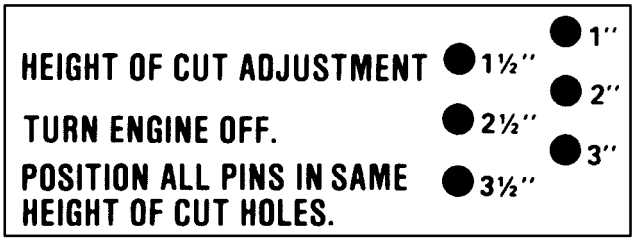

ON BOTH SIDES OF CUTTING UNIT
(Part No. 71–2760)
(Part No. 93–7820 for CE)

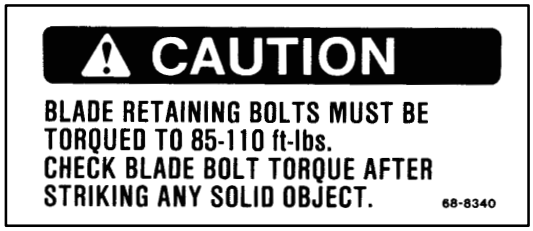

ON LEFT SIDE OF CUTTING UNIT
(Part No. 68–8340)
(Part No. 93–7818 for CE)

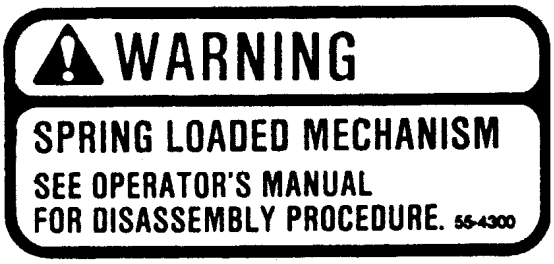

ON SPRING COVERS
(Part No. 55–4300)
(Part No. 93–6696 for CE)



ON LEFT, CENTER AND RIGHT SIDES OF DECK, UNDER SHIELDS
(Part No. 67–5360)
(Part No. 93–7273 for CE)

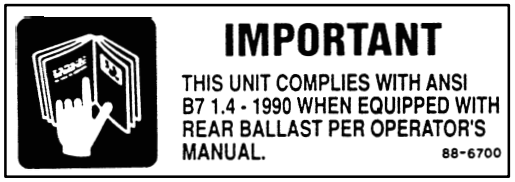

ON REAR CENTER OF CUTTING UNIT
(Part No. 88–6700)
(Part No. 93–8074 for CE)



ON GEAR BOX BRACKET
(Part No. 70–2560)
(Part No. 93–6697 for CE)



ON LEFT SIDE OF CUTTING UNIT
(Part No. 43–8480)
(Part No. 93–7815 for CE)

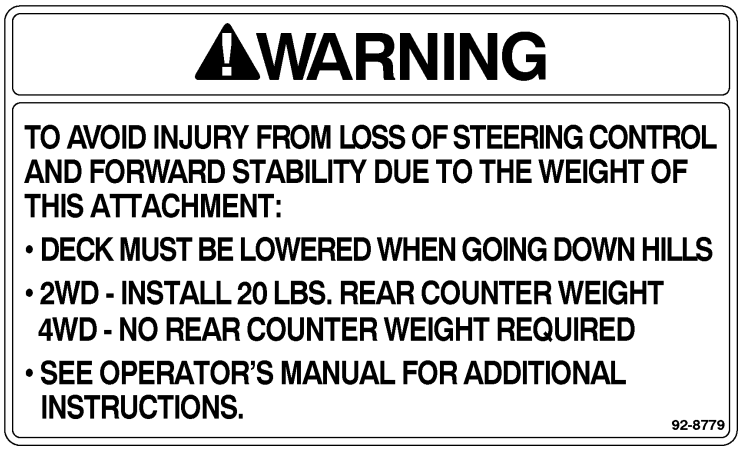

ON LEFT SIDE OF CUTTING UNIT
(Part No. 92–8779)
(Part No. 93–7808 for CE)

SPECIFICATIONS

Width of Cut: 51−3/4 in. (1.315 m).

Height of Cut: Adjustable from 1" to 3−1/2" (25 to 89 mm) in 1/2" (13 mm) increments.

Blade Tip Speed: 15,764 ft/min. @ 3300 engine rpm.

Cutter Blades: Three heat treated steel blades, each 3/16 in. (4.8 mm) thick and 18" (457 mm) long.

Pneumatic Wheels: 8 in. (203 mm) dia. with greaseable roller bearings. (Inflation 20−30 P.S.I.)

Unit Drive System : PTO driven gear box transmits power through a "AA" section belt to all blade spindles.

Optional Equipment

Rear Weight Kit: Part No. 24−5780

High Lift Blades: Part No. 44−5480

Phenolic Caster Wheels: Part No. 27−1050 use with Spanner Part No. 69−8980 or order Part No. 40−0370 Caster Fork and 3/4" bolts Part No. 328−9.

Specifications and design subject to change without notice.

LOOSE PARTS

NOTE: Use this chart as a checklist to assure all parts have been received. Without these parts, total set−up cannot be completed.

DESCRIPTION	QTY.	USE
R.H. Lift Arm L.H. Lift Arm Spacer Pivot Pin Assembly Cotter Pin 5/32" x 1−3/4" lg.	1 1 2 2 2	Mount to Traction Unit Pivot Brackets
Rear Cradle Spacer Capscrew 3/8− 16 x 2" lg. Flange Nut 3/8−16	2 2 6 6	Mount to Lift Arms
Carrier Frame Capscrews 1/2−13 x 1−1/2" lg.	1 6	Mount to Lift Arms
Clevis Pin Hair Pin Cotter	4 4	Mount Deck to Carrier Frame
Mounting Bracket Lock Pin Assembly Self Tapping Screw Spring Cover Assembly Clevis Pin Hair Pin Cotter Spring End−Top Extension Spring−Heavy Spring End−Lower Knee Link Capscrew 3/8−16 x 2−1/4" lg. Capscrew 3/8−16 x 1" lg. Shoulder Bolt Flatwasher Locknut 3/8−16	1 2 2 1 1 1 1 1 1 1 2 2 2 2 4	Mount Weight Transfer Kit
Operator's Manual Parts Catalog	1 1	Read Before Operating Machine.
Cushion Shim	3	Level Rubber Cushions on Cutting Deck

IMPORTANT: Engine Shield Kit, Model 30578, is required when mounting a 52" Rear Discharge Cutting Unit, Model 30568, to a Model 30223, 30200, 30330 or 30243 Traction Unit. Order kit from your Authorized Toro Distributor.

SET–UP INSTRUCTIONS

DANGER

Do not start the engine and engage the PTO lever when PTO shaft is not connected to cutting unit gear box because the PTO shaft will rotate with enough force to cause serious injury.

INSTALL LIFT ARMS

1. On one side of the traction unit, loosen (do not remove) the wheel nuts securing wheel and tire assembly to front wheel studs.

2. Jack up machine until the front wheel is off the floor. Use jack stands or block the machine to prevent it from falling accidentally.

3. Remove wheel nuts and slide wheel and tire assembly off studs.

4. Mount a lift arm to pivot bracket with (2) spacers, a pivot pin and 5/32" x 1–3/4" lg. cotter pin. Lift arm to be mounted with bend positioned outward (Fig. 1).

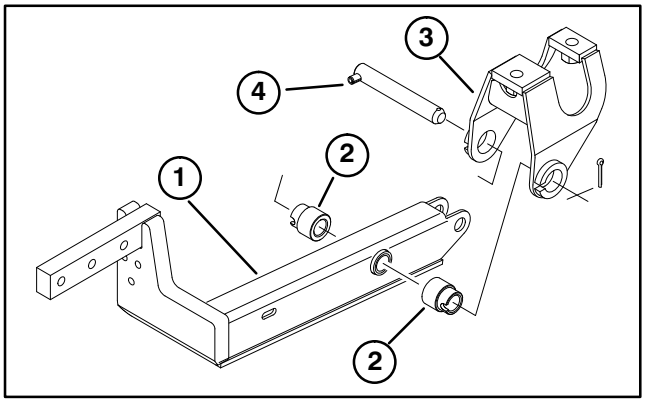

Figure 1
1. Lift arm
2. Spacer (2)
3. Pivot bracket
4. Pivot pin

5. Mount rear of lift arm to lift cylinder with pivot pin and (2) cotter pins (supplied with traction unit) (Fig. 2).

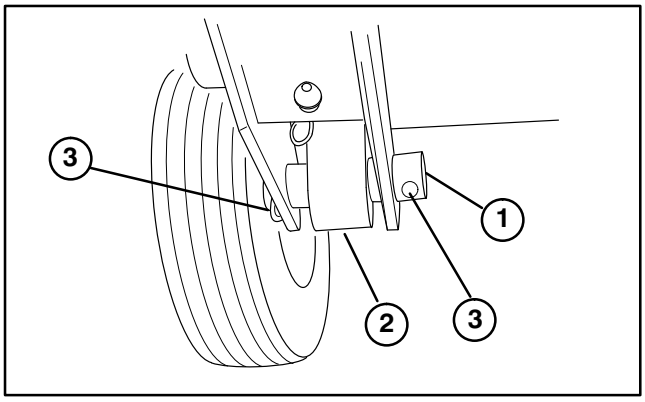

Figure 2
1. Cylinder pin
2. Cylinder end
3. Cotter pin

6. Remove cotter pins from clevis pins holding brake struts and yokes together, and discard the cotter pins. Keeping clevis pin in place, install short end of spring into hole in clevis pin to retain parts together. Connect other end of springs to slotted holes in lift arms (Fig. 3).

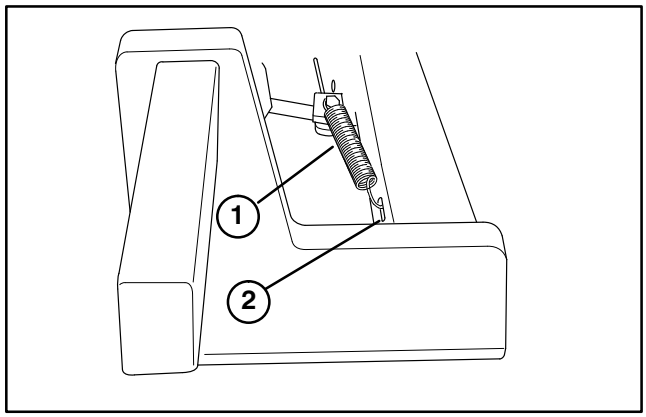

Figure 3
1. Brake return spring
2. Slotted hole

7. Repeat procedure on opposite side of machine.

INSTALL CARRIER FRAME

Note: Grease castor wheel shaft with No. 2 grease after installing and after initial operation of machine.

1. Remove lynch pin and two thrust washers shipped on each castor wheel assembly. Leave two thrust washers on each shaft, insert shafts into frame mounting tube, install thrust washers and lynch pin.

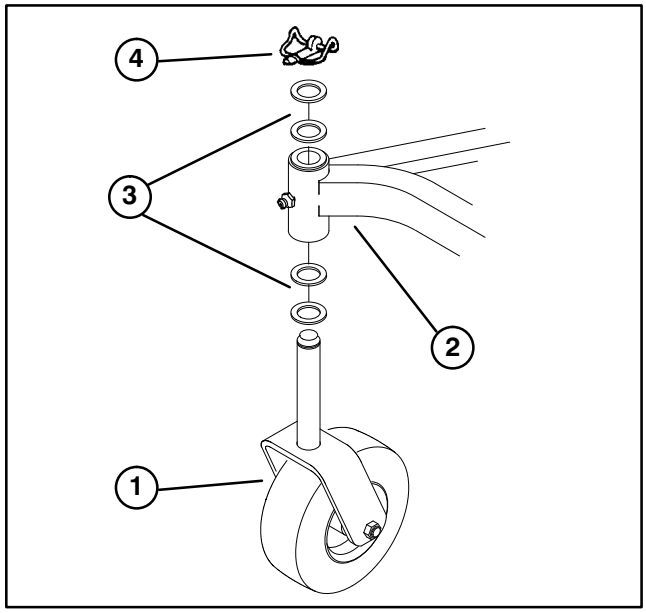

Figure 4
1. Castor wheel assembly
2. Carrier frame
3. Thrust washers
4. Lynch pin

SET−UP INSTRUCTIONS

2. Mount a rear cradle to each lift arm with (3) 3/8−16 x 2" lg. capscrews, spacer and flangenuts as shown in figure 5.

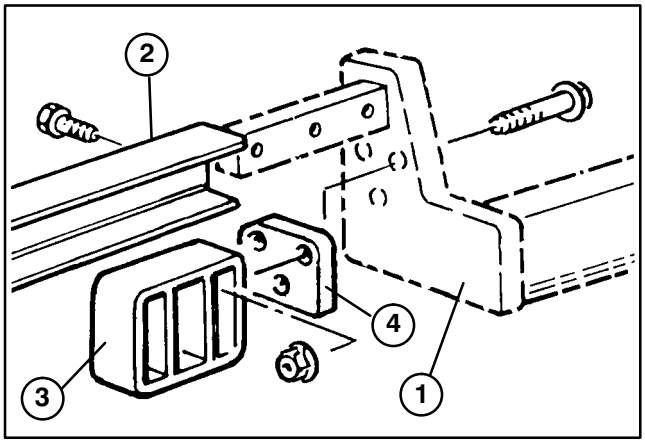

Figure 5

1. Lift arm
2. Carrier frame
3. Rear cradle
4. Spacer

Note: If rear cradle mounting holes are not in lift arms, use the dimensions shown in figure 6, to locate, mark and drill the (3) .406" dia. holes required in each lift arm.

3. Slide carrier frame onto lift arms aligning mounting holes. Secure each side of carrier frame to lift arms with (3) 1/2−13 x 1−1/2" lg. capscrews. Torque capscrews to 70−80 ft−lb. (Fig. 6).

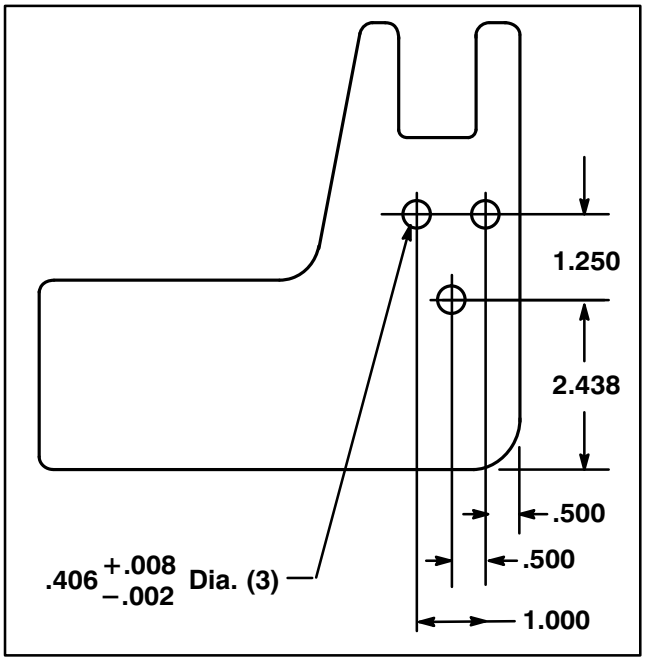

Figure 6

INSTALL CUTTING UNIT

1. Make sure PTO shaft on traction unit clears cutting unit frame, engage parking brake, be sure traction pedal is in neutral, PTO lever is in OFF position, start engine and raise frame.

2. Stop engine, slide cutting unit under frame,

Note: Steps 3, 4 & 6 refer to Model 30555TE only.

3. Remove (2) capscrews and lockwashers securing PTO guard mounting brackets to gearbox (Fig. 7). Retain fasteners for re−installation.

4. Slide PTO shaft guard onto PTO shaft, positioning guard as shown in figure 7.

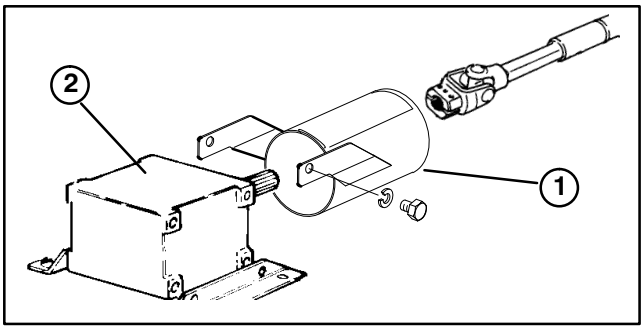

Figure 7

1. PTO Guard
2. Gearbox

5. Slide male PTO shaft in female PTO shaft. Align gearcase input shaft with PTO shaft and slide together. Secure with roll pin and tighten bolts and locknuts (Fig. 8).

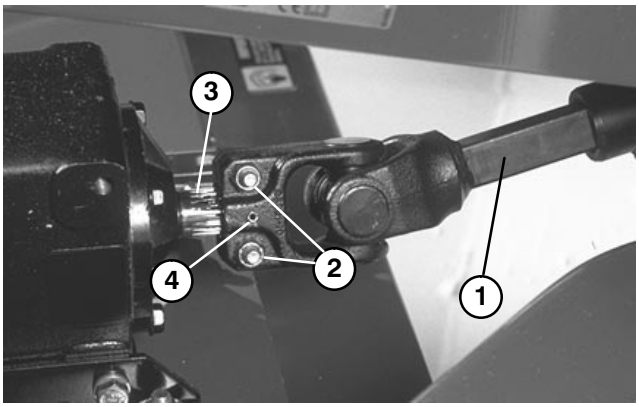

Figure 8

1. PTO shaft
2. Bolts and locknuts
3. Gearcase shaft
4. Roll pin

6. Re−install PTO shaft guard to gearbox with (2) capscrews and lockwashers previously removed.

7. Lower carrier frame and install (4) clevis pins through desired height−of−cut bracket holes and frame brackets. Secure all four pins with hair pin cotters.

SET−UP INSTRUCTIONS

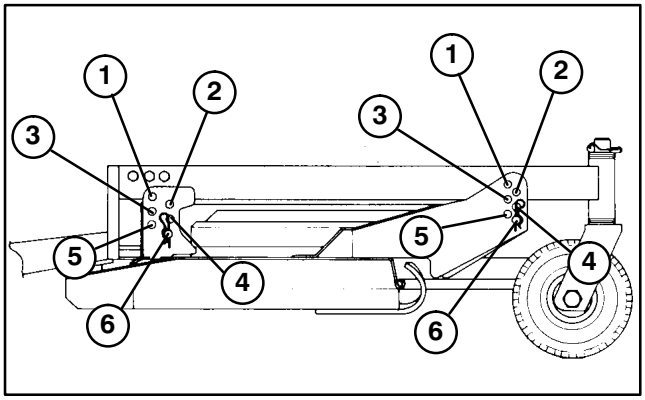

Figure 9

1. 1 in. (25 mm)
2. 1−1/2 in. (38 mm)
3. 2 in. (51 mm)
4. 2−1/2 in. (64 mm)
5. 3 in. (76 mm)
6. 3−1/2 in. (89 mm)

INSTALL WEIGHT TRANSFER KIT

1. Fully raise the cutting deck, set the parking brake, rotate the ignition key to OFF and remove key from ignition switch.

2. Place blocks under the cutting deck to prevent it from falling during assembly.

Note: Mounting brackets for weight transfer kit must be installed in different locations depending on the cutting deck. Refer to figure 10 for mounting location.

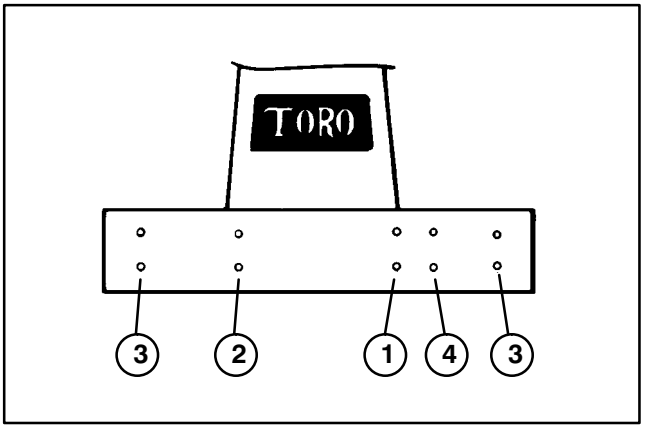

Figure 10

1. 52" side discharge deck
2. 52" deck w/bagger
3. 62" & 72" decks
4. 52" rear discharge deck

3. To install the mounting brackets, insert (2) 3/8−16 x 1" lg. flangehead capscrews through the slotted bracket holes. Thread the screws into the captivated frame nuts and torque to 45−50 ft−lb (Fig. 11).

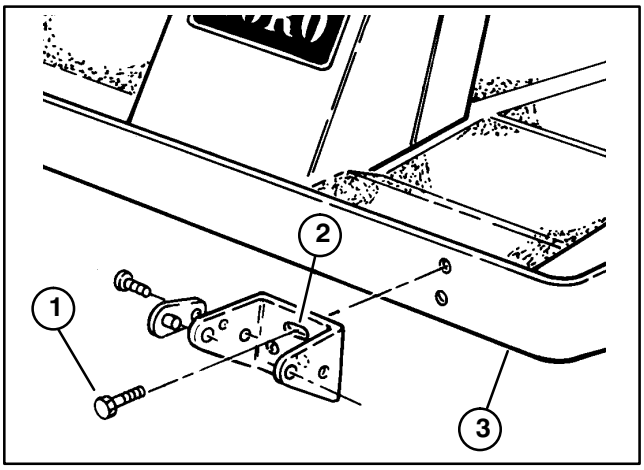

Figure 11

1. Flangehead capscrew
2. Slotted hole
3. Frame

4. Thread the top extension spring coil into the top spring end holes and the bottom extension spring coil into the bottom spring end holes (Fig. 12).

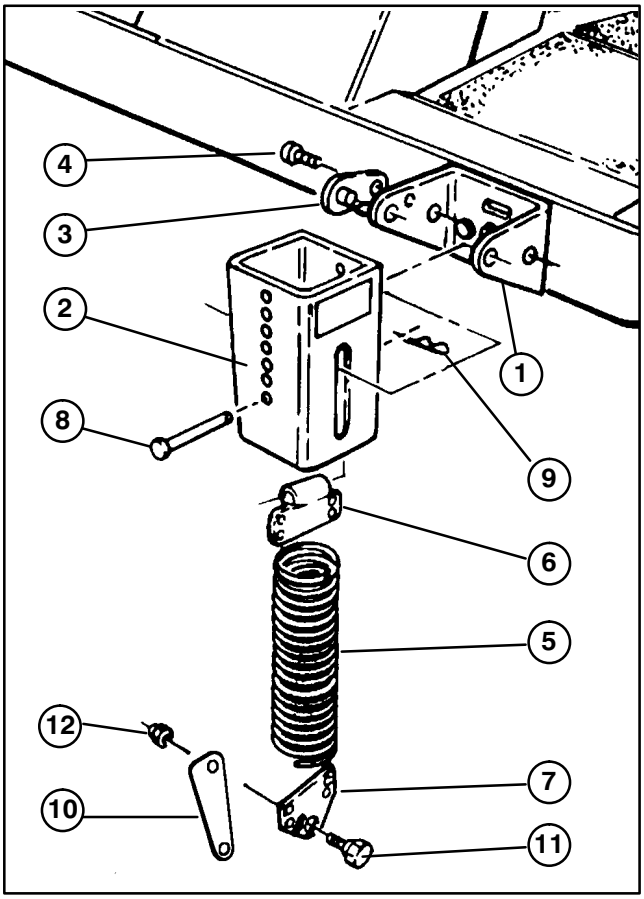

Figure 12

1. Mounting bracket
2. Spring cover
3. Lock pin assembly
4. Self tapping screw
5. Extension spring
6. Top spring end
7. Bottom spring end
8. Clevis pin
9. Hair pin cotter
10. Knee link
11. Shoulder bolt
12. Spring end stop
13. Locknut (2)

SET−UP INSTRUCTIONS

5. Mount knee link to lower spring end with wide part of knee link pointing forward and spring end stop pointing forward. Secure knee link to outer to outer side of spring end with a shoulder bolt and locknut (Fig. 12, 13).

IMPORTANT: The knee link must be assembled pointing in the proper direction or spring will not pivot correctly when deck is raised.

6. Mount bottom of knee link to deck bracket with a shoulder bolt and locknut.

7. Align slotted holes in the spring cover (slot toward the bottom) with the mounting bracket holes. Insert lock pin assemblies into the bracket holes and secure each to the bracket with self−tapping screws (Fig. 12). Torque the screws to 20 ft−lb.

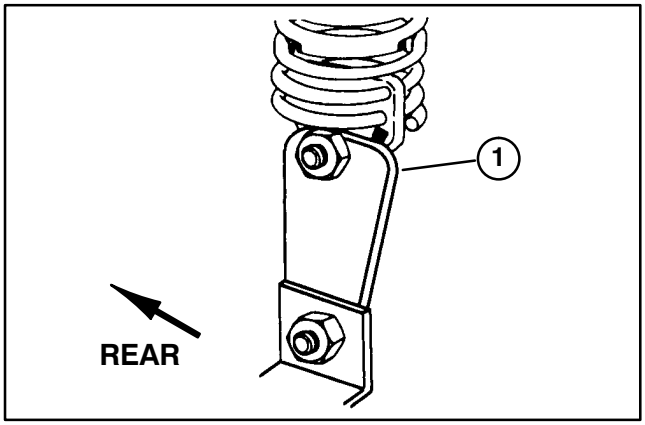

Figure 13
1. Wide part of knee link

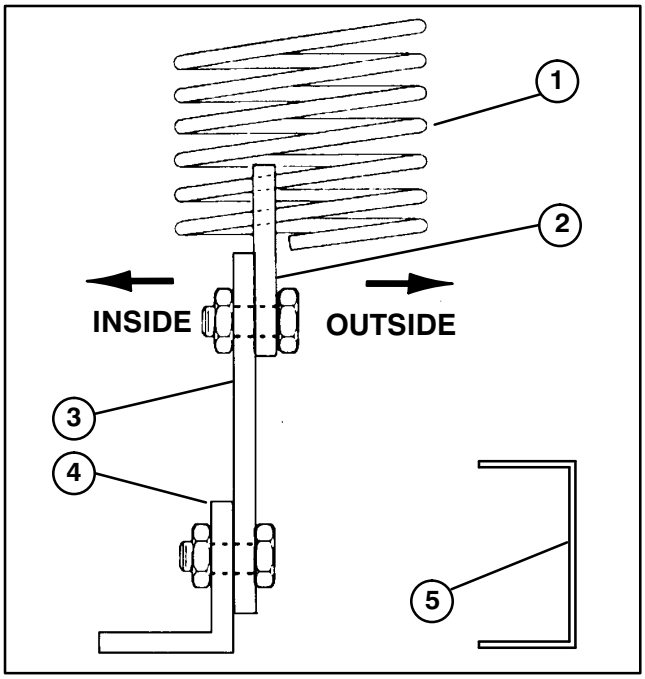

Figure 14
1. Weight transfer spring
2. Spring end plate
3. Knee link bracket
4. Deck bracket
5. Deck frame

8. From the bottom, insert the spring and top spring end into the spring cover. Select a hole that matches the cutter deck height−of−cut setting; i.e., top cover hole matches the highest height setting, bottom cover hole the lowest, etc. Align the top spring end hole with the selected spring cover holes and insert the clevis pin to secure the spring inside the cover (Fig. 12). Secure clevis pin with a hair pin cotter.

9. Remove the blocks from under the cutting unit. Make final counterbalance adjustments under actual cutting conditions; refer to Tension Spring Adjustment, page 11.

10. Check to make sure front height−of cut pins are resting properly on frame cushions (Fig. 15). If pins are not resting properly, place a shim or shims under cushion to raise it for proper alignment.

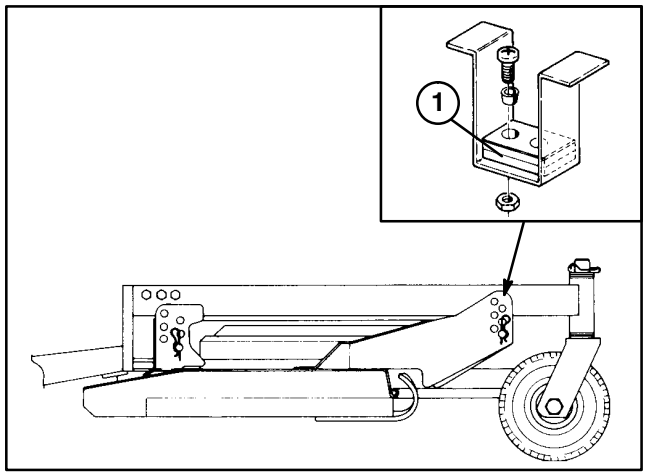

Figure 15
1. Frame cushions

INSTALL REAR WEIGHT

Two Wheel Drive Groundsmaster 1000 and 200 Series Traction Units comply with ANSI B71.4−1990 Standard when equipped with rear weight. Refer to chart in Traction Unit Operator's Manual to determine combinations of weight required. Order parts from your local Authorized Toro Distributor.

Four Wheel Drive Groundsmaster 200 Series Traction Units do not need additional rear weight to comply with ANSI B71.4−1990 Standard.

BEFORE OPERATING

ADJUSTING HEIGHT−OF−CUT

The height−of−cut is adjustable from 1 to 3−1/2 inches in 1/2 inch increments by relocating four clevis pins in different hole locations to prevent any operating and cutting unit.

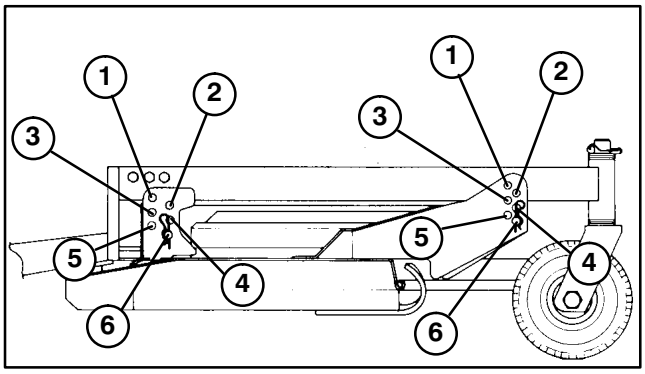

Figure 16

1. 1 in. (25 mm)
2. 1−1/2 in. (38 mm)
3. 2 in. (51 mm)
4. 2−1/2 in. (64 mm)
5. 3 in. (76 mm)
6. 3−1/2 in. (89 mm)

Note: All four pins should be in identical hole locations to prevent any operating and cutting difficulties.

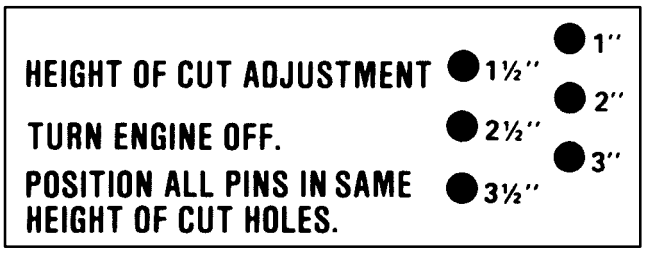

Figure 17

CHECK LUBRICANT IN GEAR BOX

The gearbox is designed to operate on SAE 80−90 wt. gear lube. Although the gear box is shipped with lubricant from the factory, check the level before operating the cutting unit.

1. Position machine and cutting unit on a level surface.

2. Remove check plug from side of gear box and make sure lubricant is up to bottom of hole. If level of lubricant is low, remove fill plug on top of gear case and add enough lubricant to bring it up to bottom of hole in side.

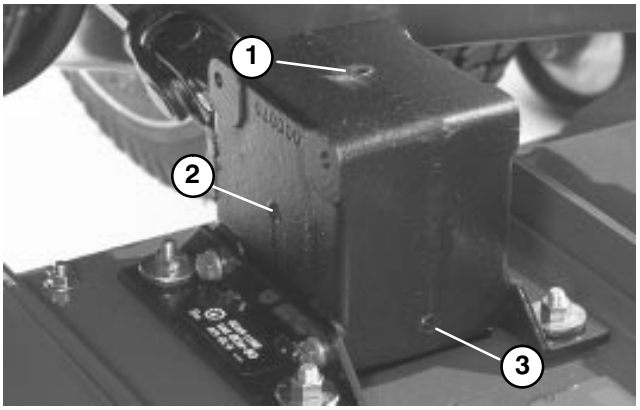

Figure 18

1. Filler plug
2. Check plug
3. Drain plug

OPERATING INSTRUCTIONS

TENSION SPRING ADJUSTMENT

For best performance, so cutting unit bounce on uneven turf is minimal and it does not ride heavily over flat terrain. If scalping occurs or the cut is uneven from side to side, there may too much weight on the deck and weight may have to be transferred to the traction unit: i.e. increased spring tension.

By contrast, if too much weight is transferred to the traction unit, the deck will bounce excessively and the cut will be uneven. If the cutting unit does not perform properly, adjust as follows:

1. Stop the machine on a level surface, set parking brake, fully raise cutting unit turn ignition key to OFF and remove key from switch.

2. Remove hair pin cotter from clevis pin securing spring end to spring cover and remove clevis pin. Align the top spring end hole with the new hole selected in the spring cover, insert clevis pin and secure with hairpin cotter.

3. Resume operations. If further adjustments are required repeat procedure.

CAUTION

Counterbalance spring is in tension when deck is in lowered position. Always raise deck before adjusting or removing spring.

LUBRICATION

GREASE BEARINGS AND BUSHINGS

The cutting unit must be lubricated regularly. If machine is operated under normal conditions, lubricate castor bearings and bushings with No. 2 general purpose lithium base grease or molybdenum base grease, after every 8 hours of operation or daily, whichever comes first. All other bearings, bushings and gear box must be lubricated after every 50 hours of operation.

1. The cutting unit lubrication points are: castor spindle bushings (Fig. 19), castor wheel bearings (Fig. 19), right and left lift arm pivot pins (Fig. 20) and blade spindle bearings (Fig. 21).

2. Lower cutting unit so castor wheels are on a level surface. Be sure all height−of−cut pins are in the same hole locations. Remove check plug (Fig. 22) from side of gear box and check level of lubricant. If level of lubricant is low, remove fill plug on top of gear box and add SAE 80−90 wt. gear lube until level is up to bottom of check hole.

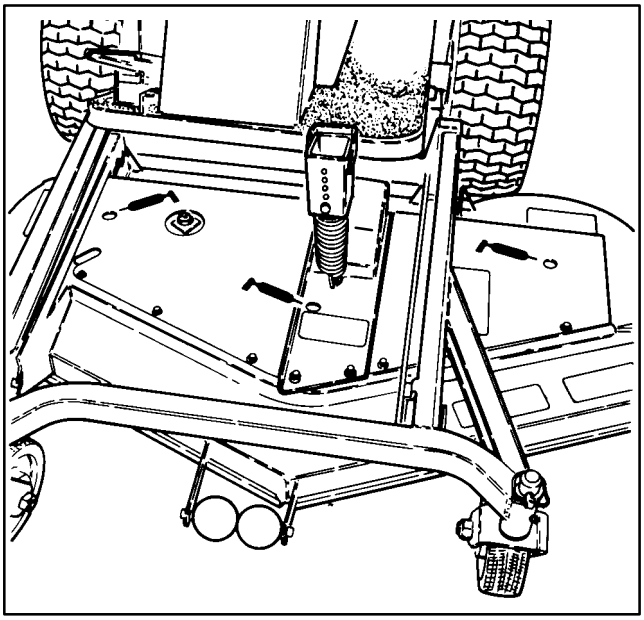

Figure 21

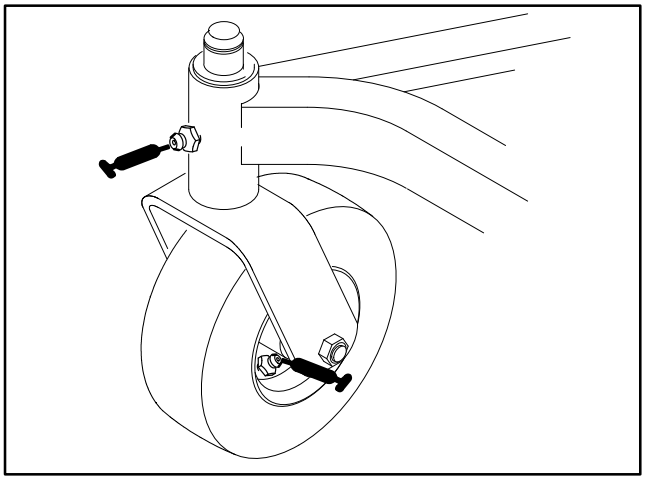

Figure 19

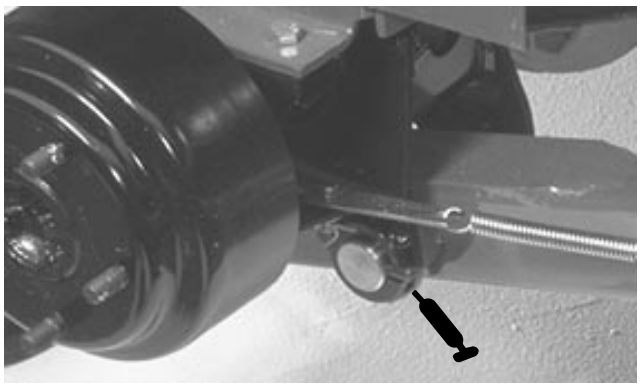

Figure 20

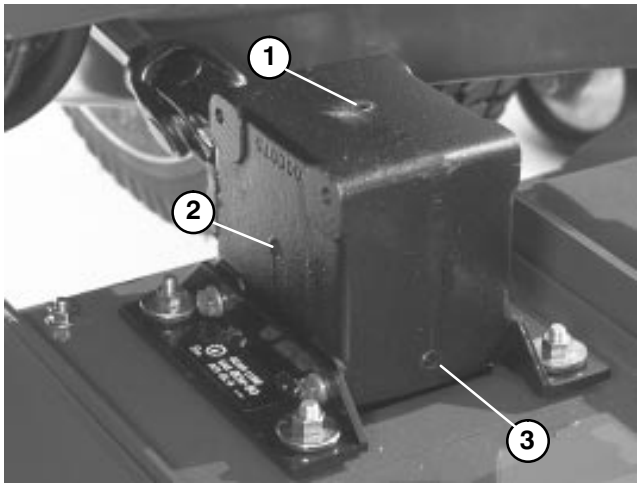

Figure 22

1. **Fill plug**
2. **Check plug**
3. **Drain plug**

MAINTENANCE
TROUBLE SHOOTING

UNIT WILL NOT CUT OR CUTS POORLY

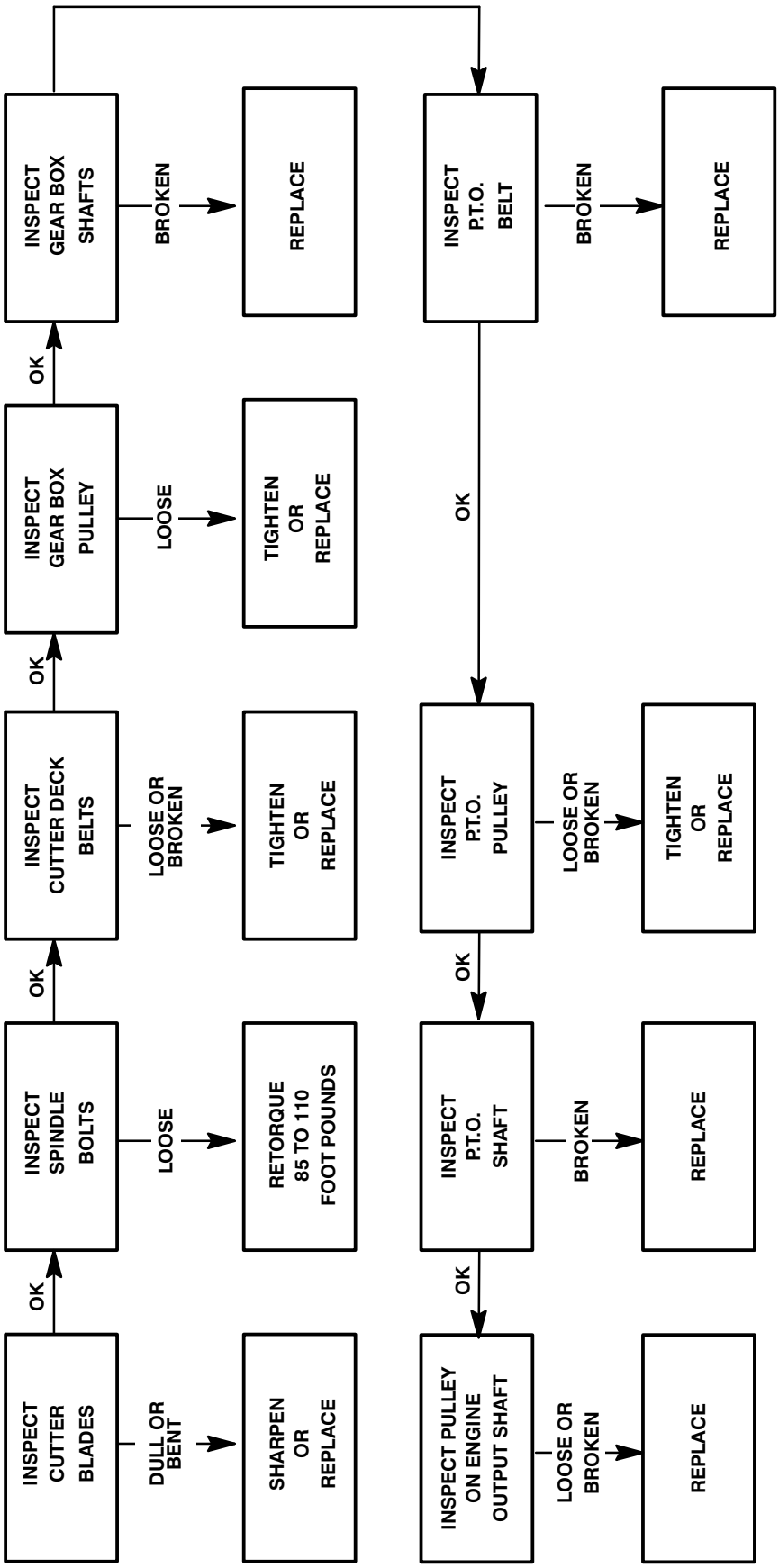

MAINTENANCE

SEPARATING CUTTING UNIT FROM TRACTION UNIT

1. Position machine on a level surface, raise cutting unit, engage parking brake, be sure traction pedal is in neutral position, PTO lever in OFF position, shut engine OFF and remove key from switch.

CAUTION

Counterbalance spring is in tension when deck is in lowered position. Always raise deck before adjusting or removing spring.

2. Disconnect counterbalance from traction unit, remove lock pins from brackets, separate spring tension assemblies from brackets and lay them down on the deck. Loosely secure lock pins to brackets to prevent losing them (Fig. 23).

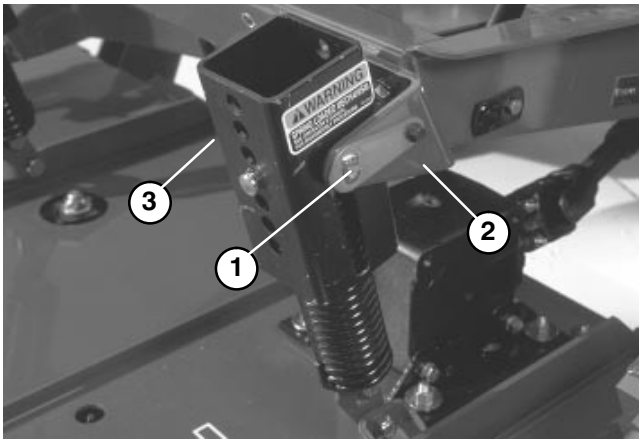

Figure 23

1. Lockpin
2. Bracket
3. Spring tension assembly
4. Height−of0cut clevis pin

3. Lower cutting unit, remove (4) pins from height−of−cut brackets (Fig. 23).

4. Start engine, raise cutting unit frame.

5. Stop engine and slide cutting unit away from traction unit and carrier frame, separating male and female sections of PTO shaft (Fig. 24).



Figure 24

1. Male PTO shaft
2. Female PTO shaft

CAUTION

Do not start engine and engage the PTO lever when PTO shaft is not connected to gear box on cutting unit. If engine is started and PTO shaft is allowed to rotate, serious injury could result.

6. Deck carrier frame must be removed if traction unit will be used with any other accessory.

SERVICING BUSHINGS IN CASTOR ARMS

The castor arms have bushings pressed into the top and bottom portion of the tube which, after many hours of operation, will wear. To check the bushings, move castor fork back and forth and from side-to−side. If castor shaft is loose inside the bushings, bushings are worn and must be replaced.

1. Raise cutting unit so wheels are off floor and block it so cannot accidentally fall.

2. Remove lynch pin and thrust washers from top of castor spindle.

3. Pull castor spindle out of mounting tube. Allow thrust washers to remain on bottom of spindle.

4. Insert pin punch into top or bottom of mounting tube and drive bushing out of tube (Fig. 25). Also drive other bushing out of tube. Clean inside of mounting tube to remove any dirt.

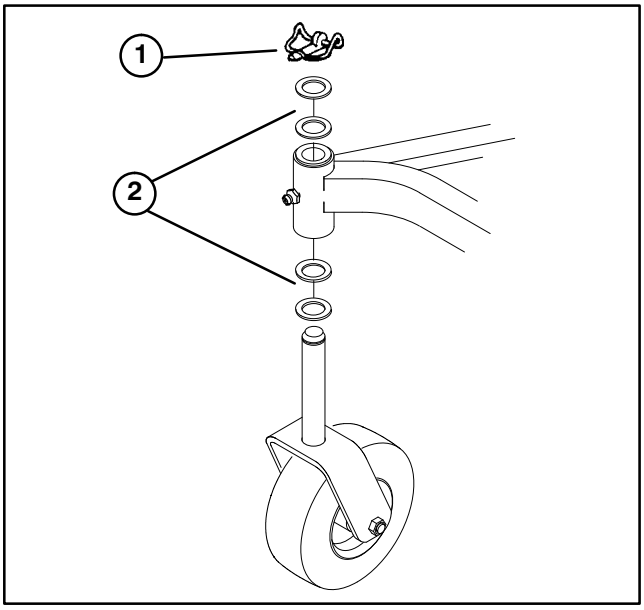

Figure 25

1. Lynch pin
2. Thrust washers

5. Apply grease to inside and outside of new bushings. Using a hammer and flat plate, drive bushings into mounting tube.

6. Inspect castor shaft for wear and replace if damaged.

7. Push castor shaft through bushings and mounting tube. Slide spacers onto shaft and secure with lynch pin.

IMPORTANT: When bushings are installed, the inside diameter may collapse slightly, and this may not allow castor shaft to be installed. If castor spindle does not slide through new bushings and mounting tube, ream both bushings to inside diameter of 1.126 inches.

SERVICING CASTOR WHEEL AND BEARING

The castor wheel rotates on a high−quality roller bearing and is supported by a spanner bushing. Even after many hours of use, provided that the bearing was kept well−lubricated, bearing wear will be minimal. However, failure to keep bearing lubricated will cause rapid wear. A wobbly castor wheel usually indicates a worn bearing.

1. Remove locknut from capscrew holding castor wheel assembly between castor fork. Grasp castor wheel and slide capscrew out of fork.

Note: Account for (2) thrust washers.

2. Tip wheel to the side and allow spanner bushing to fall out.

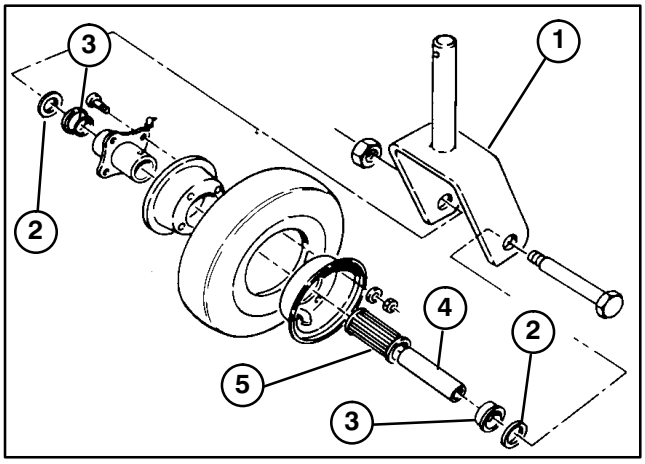

Figure 26

1. Castor fork
2. Thrust washer
3. Bearing retainer
4. Spanner bushing
5. Roller bearing

3. Remove one bearing retainer from wheel hub and allow bearing to fall out. Remove bearing retainer from opposite side of wheel hub.

4. Inspect bearing, spanner bushing and wheel for wear. Replace worn, damaged parts.

5. To assemble parts, slide spanner bushing through hub assembly.

6. Mount castor wheel assembly and washers between the fork, insert capscrew and locknut. Tighten capscrew and locknut until spanner bushing and washers bottom against inside of castor fork.

7. Pump grease through grease fitting on wheel until bearing is greased thoroughly.

CHECKING FOR BENT BLADE

1. Position machine on a level surface, raise cutting unit, engage parking brake, be sure traction pedal is in neutral position, PTO lever in OFF position, shut engine OFF, remove key from switch and disconnect wires from spark plugs. Block cutting unit to prevent it from falling accidentally.

2. Rotate blade until the ends face forward and backward. Measure from inside of cutting unit to cutting edge at front of blade (Fig. 27), and remember this dimension.

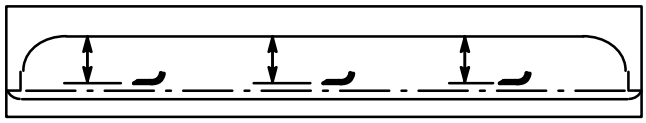

Figure 27

3. Rotate opposite end of blade forward. Measure between the cutting unit and cutting edge of blade at the same position as in step 2. The difference between dimensions obtained in steps 2 and 3 must not exceed 1/8 of an inch. If dimension exceeds 1/8 of an inch, replace the blade because it is bent: refer to Replacing Cutter Blade.

REPLACING CUTTER BLADE

The blade must be replaced if a solid object is hit, the blade is out−of−balance or if the blade is bent. Always use genuine TORO replacement blades to be sure of safety and optimum performance. Never use replacement blades made by other manufacturers because they could be dangerous.

WARNING

Do not try to straighten a blade that is bent, and never weld a broken or cracked blade. Always use a new blade to assure safety.

1. Position machine on a level surface, raise cutting unit, engage parking brake, be sure traction pedal is in neutral position, PTO lever in OFF position, shut engine OFF, remove key from switch and disconnect wires from spark plugs. Block cutting unit to prevent it from falling accidentally.

2. Grasp end of blade using a rag or thickly padded glove. Remove blade bolt, anti−scalp cup and blade from spindle shaft.

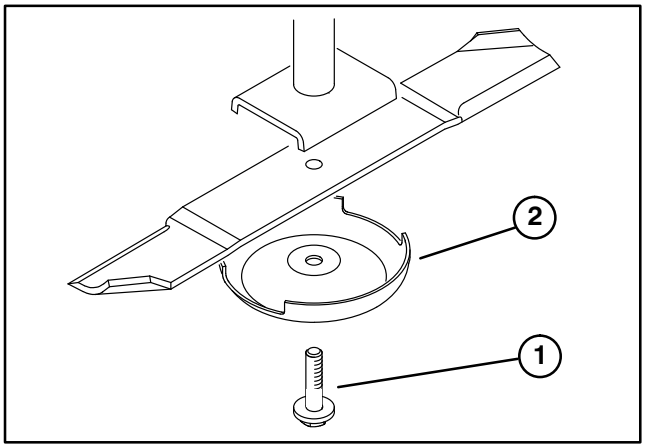

Figure 28

1. Blade bolt
2. Anti−Scalp Cup

3. Install blade−sail facing toward cutting unit− with anti−scalp cup and blade bolt. Tighten blade bolt to 85−110 ft-lb.

CHECKING SAIL AND SHARPENING CUTTER BLADE

Two areas must be considered when checking and servicing the cutter blade: one area is the sail, the other is the cutting edge. Both cutting edges and the sail, which is the turned up portion opposite the cutting edge, contribute to a good quality−of−cut. The sail is important because it pulls grass up straight, thereby producing an even cut. However, the sail will gradually wear down during operation, and this condition is normal. As the sail wears down, the quality−of−cut will degrade somewhat, although the cutting edges are sharp. The cutting edge of the blade must be sharp so the grass is cut rather than torn. A dull cutting edge is evident when tips of the grass appear brown and shredded. Sharpen the cutting edges to correct this condition.

1. Position machine on a level surface, raise cutting unit, engage parking brake, be sure traction pedal is in neutral position, PTO lever in OFF position, shut engine OFF, remove key from switch and disconnect wires from spark plugs. Block cutting unit to prevent it from falling accidentally.

2. Examine cutting ends of the blade carefully, especially where the flat and curved parts of the blade meet (Fig. 29−A). Since sand and abrasive material can wear away the metal that connects the flat and curved parts of the blade, check the blade before using the mower. If wear is noticed (Fig. 29−B), replace the blade.

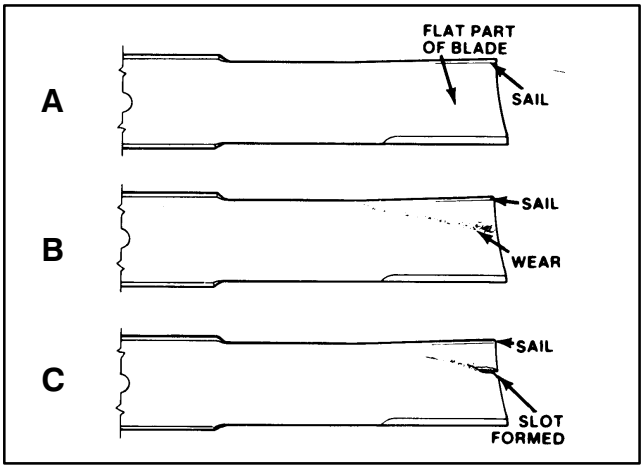

Figure 29

3. Examine cutting edges of all blades. Sharpen the cutting edges if they are dull or nicked. Sharpen only the top of the cutting edge and maintain the original cutting angle to make sure of sharpness (Fig. 30). The blade will remain balanced if same amount of metal is removed from both cutting edges.

DANGER

If blade is allowed to wear, a slot will form between the sail and flat part of the blade (Fig. 29−C). Eventually a piece of the blade may break off and be thrown from under the housing, possibly resulting in serious injury to yourself or bystanders.

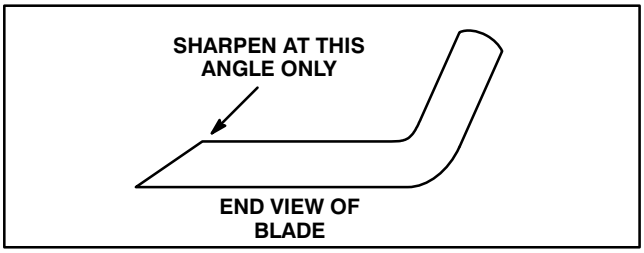

Figure 30

Note: Remove the blades and sharpen them on a grinder: refer to Removing Cutter Blades, steps 2 and 3. After sharpening the cutting edges, reinstall blade with anti−scalp cup and blade bolt. Blade sails must be on top of blade. Tighten blade bolt to 85−110 ft−lb.

CORRECTING CUTTING UNIT MISMATCH

If one cutter blade cuts lower than the others, correct as follows:

1. Lower cutting unit onto a level surface, engage parking brake, be sure traction pedal is in neutral position, PTO lever in OFF position, shut engine OFF, remove key from switch and disconnect wires from spark plugs. Make sure tire pressure is equal on all tires.

2. Raise height−of−cut to the 3−1/2 in. position: refer to Adjusting Height−Of−Cut.

3. Rotate blades so tips line up with one another. Tips of the adjacent blades must be within 1/8 in. of each other. If tips are not within 1/8 in. of each other, proceed to step 10 and add shims between spindle housing and bottom of cutting unit.

4. Check to make sure front height−of−cut pins are resting properly on frame cushions. If pins are not resting properly, place a shim or shims under cushion to raise it for proper alignment.

5. Position all three blades in the "A" position (Fig. 31) and measure from level surface to the bottom of the tip end of each blade (Fig. 32).

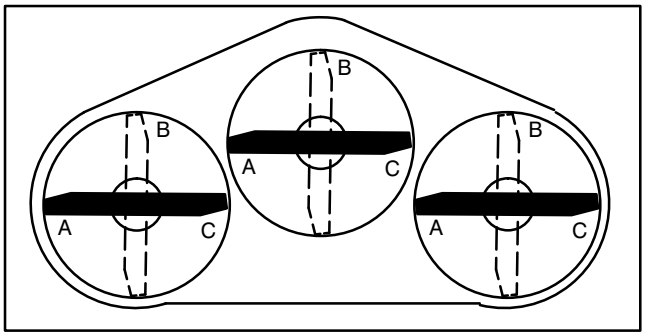

Figure 31

6. Note measurement attained at "A", rotate blades to "B" position (Fig. 31), measure distance of all blades to level surface and note dimensions (Fig. 32).

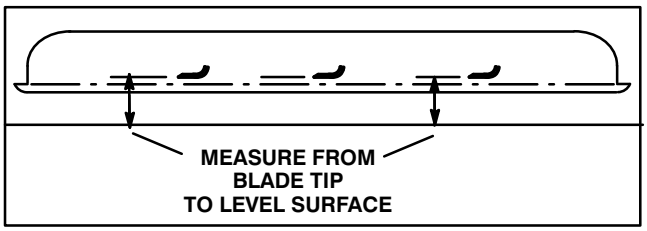

Figure 32

7. Rotate blades to "C" position, measure and note distance measured (Fig. 31, 32).

8. Compare measurements at various positions. All dimensions must be equal within 1/4 in. from any two adjacent blades. The difference between dimensions of all three blades must not exceed 3/8 in. If difference exceeds specifications proceed to step 9.

9. Remove capscrews, flatwashers and locknuts from outer spindle in the area where shims must be added. To raise or lower the blade, add a shim, Part No. 3256−24, between spindle housing and bottom of cutting unit. Continue checking alignment of blades and adding shims until tips of blades are within the required dimension.

10. Equalize side−to−side measurements as follows:

A. Cutting units usually operated at 1 to 2 in. height−of−cut should have the low side of the cutting unit raised. Remove the lynch pin securing castor wheel on low end (Fig. 33) and remove castor assembly.

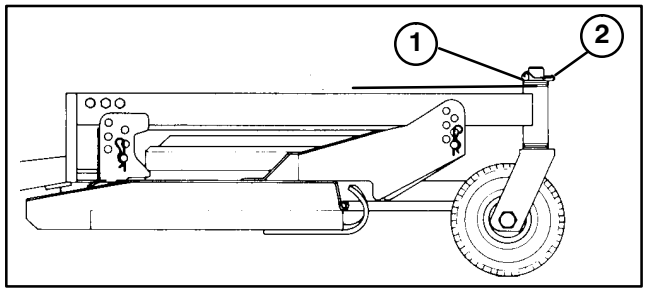

Figure 33
1. **Thrust washers (as required)**
2. **Lynch pin**

B. Transfer one thrust washer from top side of castor shaft to lower side, install castor assembly and compare blade height of all blades; refer to items 3 through 7. Continue adding thrust washers if height still does not meet requirements.

C. If cutting unit is operated at 2 to 4 in. height−of−cut, lower the high side of cutting unit. Remove lynch pin of castor at high end of unit and remove castor assembly (Fig. 33).

D. Transfer one thrust washer from lower side of castor shaft to top side, install assembly and compare blade height of all blades; refer to items 3 through 7. Repeat procedure if height still does not meet requirements.

E. If height is within specified dimension, install lynch pin, set height−of−cut to proper height and resume operation.

ADJUSTING IDLER PULLEY

The idler pulley applies force against the belt so power can be transmitted to the blade pulleys. If the idler is not tensioned against the belt with sufficient force, maximum power will not be transmitted to the pulleys. Initial tension on a new belt requires 25 to 30 ft-lb of torque on the large nut, which applies force against the belt. As the belt wears and loosens, 20 to 25 ft-lb of torque on the large nut is required. If the idler is not adjusted to these specifications, adjustment is necessary.

1. Position machine on a level surface, lower cutting unit, engage parking brake, be sure traction pedal is in neutral position, PTO lever in OFF position, shut engine OFF and remove key from switch.

2. Release and unhook latches securing center cover to top of cutting unit. Remove cover from cutting unit.

3. Loosen two nuts securing idler plate in place. Using a socket and torque wrench, tighten the idler adjusting nut to 25−30 ft−lb.

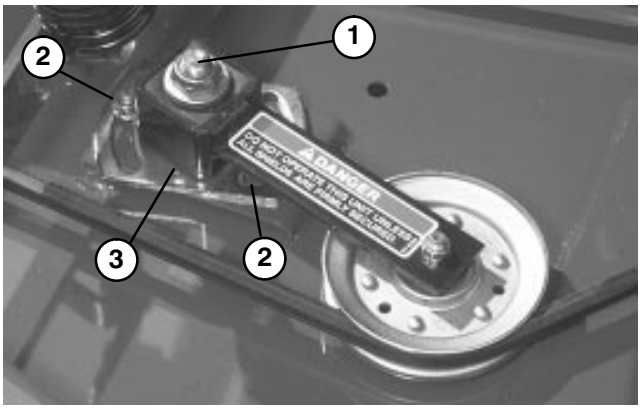

Figure 34

1. **Idler adjusting nut**
2. **Nuts (2)**
3. **Idler plate**

4. Hold the torque against the belt and tighten the two nuts so idler plate is held securely in place. Release the idler adjusting nut. Install cover and secure latches.

REPLACING DRIVE BELT

The blade drive belt, tensioned by the adjustable idler, is very durable. However, after many hours of use, the belt will show signs of wear. Signs of a worn belt are: squealing when belt is rotating, blades slipping when cutting grass, frayed edges, burn marks and cracks. Replace the belt if any of these conditions are evident.

1. Position machine on a level surface, lower cutting unit, engage parking brake, be sure traction pedal is in neutral position, PTO lever in OFF position, shut engine OFF and remove key from switch.

2. Release and unhook latches securing covers to top of cutting unit. Remove covers.

3. Loosen two nuts securing idler plate in place and remove old belt from pulleys.

4. To install new belt, the gear box base must be removed. To do this, remove four carriage bolts and locknuts holding gear box base.

5. Install new belt around gear box pulley, spindle pulleys, stationary idler pulley and adjustable idler pulley.

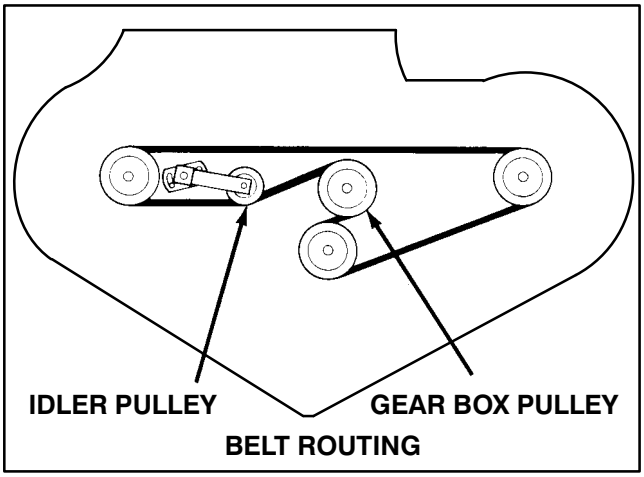

Figure 35

6. Install gear box base with carriage bolts and locknuts.

7. Using a torque wrench, adjust tension of idler pulley against the belt: refer to Adjusting Idler Pulley.

8. Reinstall covers and secure latches.

IDENTIFICATION AND ORDERING

MODEL AND SERIAL NUMBERS

The cutting deck has two identification numbers: a model number and a serial number. The two numbers are stamped into a plate which is located on carrier frame behind the right front castor wheel. In any correspondence concerning the mower, supply the model and serial numbers to assure that correct information and replacement parts are obtained.

To order replacement parts from an authorized TORO Distributor, supply the following information:

1. Model and serial numbers of the machine.

2. Part number, description and quantity of parts desired.

Note: Do not order by reference number if a parts catalog is being used; use the part number.

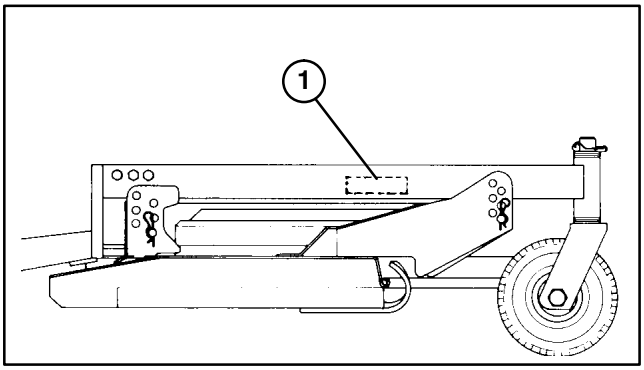

Figure 36
1. Model & serial number

MAINTENANCE CHART

Date	Hours Used							

The Toro Commercial Products Two Year Limited Warranty

The Toro Company warrants your 1996 or newer Toro Commercial Product ("Product") purchased after January 1, 1997, to be free from defects in materials or workmanship for the period of time listed below. Where a warrantable condition exists, Toro will repair the Product at no cost to you including diagnosis, labor, parts, and transportation. This warranty begins on the date the Product is delivered to the original retail purchaser.

Warranty Duration: Two years or 1500 operational hours*, whichever occurs first.
***Product equipped with hour meter**

Owner Responsibilities:

As the Product owner, you are responsible for required maintenance and adjustments stated in your Owner's Manual. Failure to perform required maintenance and adjustments can be grounds for disallowing a warranty claim.

Instructions for Obtaining Warranty Service:

You are responsible for notifying the Commercial Products Distributor or Authorized Commercial Products Dealer from whom you purchased the Product as soon as you believe a warrantable condition exists.

If you need help locating a Commercial Products Distributor or Authorized Dealer, or if you have questions regarding your warranty rights or responsibilities, you may contact us at:

Toro Commercial Products Service Department
8111 Lyndale Avenue South
Minneapolis, MN, 55420–1196
Telephone: (612) 888–8801
Facsimile: (612) 887–8258
E–Mail: Commercial.Service@Toro.Com

Maintenance Parts:

Parts scheduled for replacement as required maintenance ("Maintenance Parts"), are warranted for the period of time up to the scheduled replacement time for that part.

Items/Conditions Not Covered:

Not all product failures or malfunctions that occur during the warranty period are defects in materials or workmanship. The items / conditions listed below are not covered by this warranty:

- Product failures which result from the use of non–Toro replacement parts, or from installation and use of add–on, modified, or unapproved accessories are not covered.
- Product failures which result from failure to perform required maintenance and/or adjustments are not covered.
- Product failures which result from operating the Product in an abusive, negligent or reckless manner are not covered.
- This warranty does not apply to parts subject to consumption through use unless found to be defective. Examples of parts which are consumed, or used up, during normal Product operation include, but are not limited to, blades, reels, bedknives, tines, spark plugs, castor wheels, tires, filters, belts, etc.
- This warranty does not apply to failures caused by outside influence. Items considered to be outside influence include, but are not limited to, weather, storage practices, contamination, use of unapproved coolants, lubricants, additives, or chemicals, etc.
- This warranty does not apply to normal "wear and tear" items. Normal "Wear and Tear" includes, but is not limited to, damage to seats due to wear or abrasion, worn painted surfaces, scratched decals or windows, etc.

Other Legal Disclaimers:

The above remedy of product defects through repair by an authorized distributor or dealer is the purchaser's sole remedy for any defect. This warranty gives you specific legal rights, and you may also have other rights which vary from state to state.

Except for the Emissions warranty referenced below, if applicable, there is no other express warranty. All implied warranties of merchantability and fitness for use are limited to the duration of the express warranty.

Some states do not allow limitations on how long an implied warranty lasts, so the above limitation may not apply to you.

The Toro Company is not liable for indirect, incidental or consequential damages in connection with the use of the Product, including any cost or expense of providing substitute Product or service during periods of malfunction or non–use.

Some states do not allow the exclusion of incidental or consequential damages, so the above exclusion may not apply to you.

Note to California residents: The Emissions Control System on your Product may be covered by a separate warranty meeting requirements established by the U.S. Environmental Protection Agency (EPA), or the California Air Resources Board (CARB). The hour limitations set forth above do not apply to the Emissions Control System Warranty. Refer to the California Emission Control Warranty Statement printed in your Owner's Manual or contained in the engine manufacturer's documentation for details.