Form No. 3417-394 Rev B

TORO®

Count on it.

Parts Catalog

TimeCutter® MX 5000

Riding Mower

Model No. 74775—Serial No. 401300000 and Up

Register at www.Toro.com.
Original Instructions (EN)

3417-394 B

Ordering Replacement Parts

To order replacement parts, please supply the part number, the quantity, and the description of each part desired.

Understanding Reference Numbers

Each identified part in an illustration has a reference number. The reference number for a part also appears in the parts list, along with other information about the part.

This catalog uses two special reference number formats, one to indicate parts in a service assembly and another to indicate the quantity of a given part in an illustration.

Service Assembly Reference Numbers

Parts in service assemblies have reference numbers in the form a:b. The a represents the reference number of the entire service assembly and the b represents a sequential number unique to each part within the service assembly.

For example, a wheel assembly might be identified by reference number 6, the tire by 6:1, the valve by 6:2, and the wheel by 6:3. When you order the assembly identified by reference number 6, you receive all parts identified by reference numbers 6:1,6:2, and 6:3. However, you may also order any part individually. Reference numbers of this type appear in illustration and in parts lists.

Reference Numbers Indicating Quantity

In an illustration, if a reference number indicates more than one part, the reference number has the form nX y. The n represents the quantity of the part, the X is the multiplication symbol, and the y represents the reference number.

For example, in an illustration, the reference number 2X 37 means that two of the parts identified by reference number 37 are indicated.

Contents

Frame Assembly 4
Deck Lift Assembly 6
Caster, Wheel and Tire Assembly 8
Traction Drive Assembly 10
Left Hand Hydro Transaxle Assembly No. 119-3350 12
Right Hand Hydro Transaxle Assembly No. 119-3351 14
Brake Assembly 16
Rear Tire Assembly 18
Seat Pan Assembly 20
Motion Control Assembly 22
Engine Assembly 24
Fuel System Assembly 26
Carburetor Assembly 28
Air Intake and Filtration Assembly 30
Ignition and Electrical Assembly 32
Crankcase and Crankshaft Assembly 34
Governor Control Assembly 36
Piston and Cylinder Head Assembly 38
Blower Housing Assembly 40
Gasket and Seal Kit 42
Body Styling and Fuel Tank Assembly 44
Battery and Electrical Assembly 46
50 Inch Deck Assembly 48
50 Inch Deck and Decal Assembly No. 131-3614 50
Model Specific Decal Assembly 52
Frame Decal Assembly 54
Clutch Assembly 56
Attachments and Accessories 58

© 2018—The Toro® Company
8111 Lyndale Avenue South
Bloomington, MN 55420

Contact us at www.Toro.com.
Printed in the USA.
All Rights Reserved

Frame Assembly

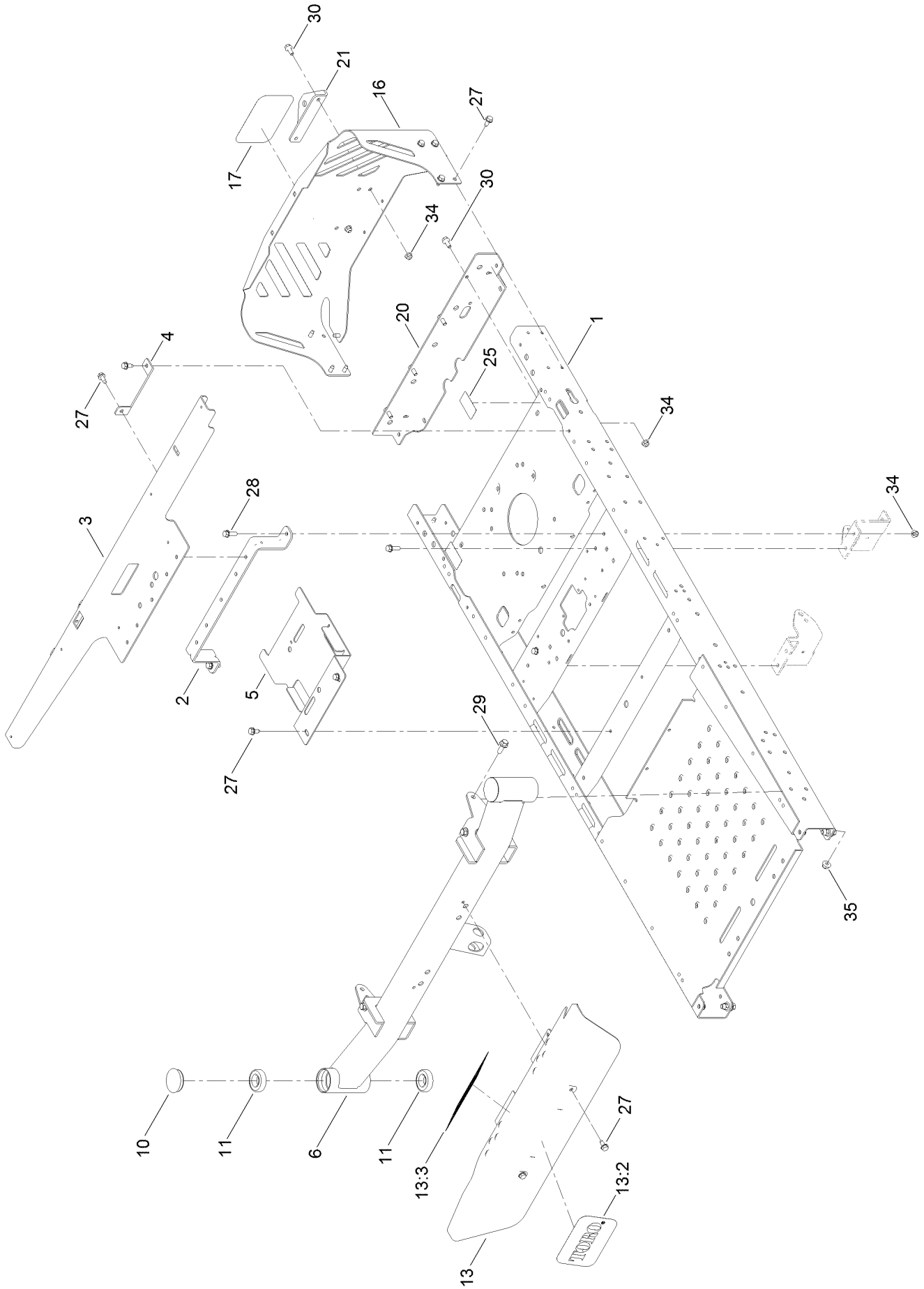

Frame Assembly (continued)

Ref.	Part Number	Qty.	Description
1	135-0508-01	1	Riveted Frame ASM (Wide Lever)
2	135-0687-03	1	Brace-Seat, Rear (Wide)
3	131-1039-03	1	Support-Pod, Wide
4	119-3431-03	2	Support-Tank, Rear
5	135-0507-03	1	Bracket-Battery
6	137-7029-01	1	Axle-Wide
10	116-4348	2	Cap-Grease
11	109-3678	4	Bearing-Ball
13	132-0892	1	Footrest ASM
13:2	99-4693	1	Decal
13:3	132-0869	1	Decal-Danger

Ref.	Part Number	Qty.	Description
16	130-0701-03	1	Guard-Engine, Wide
17	99-4693	1	Decal
20	130-6946-01	1	Crossmember-Rear, Wide
21	117-1232-03	1	Bracket-Hitch
25	121-2989	2	Decal-Bypass
27	32144-70	18	Screw-HWHTF
28	3234-29	4	Screw-HHF
29	3234-42	6	Screw-HHF
30	3234-47	8	Screw-HHF
34	104-8300	12	Nut-HF, NI
35	104-8301	6	Nut-HF, NI

Deck Lift Assembly

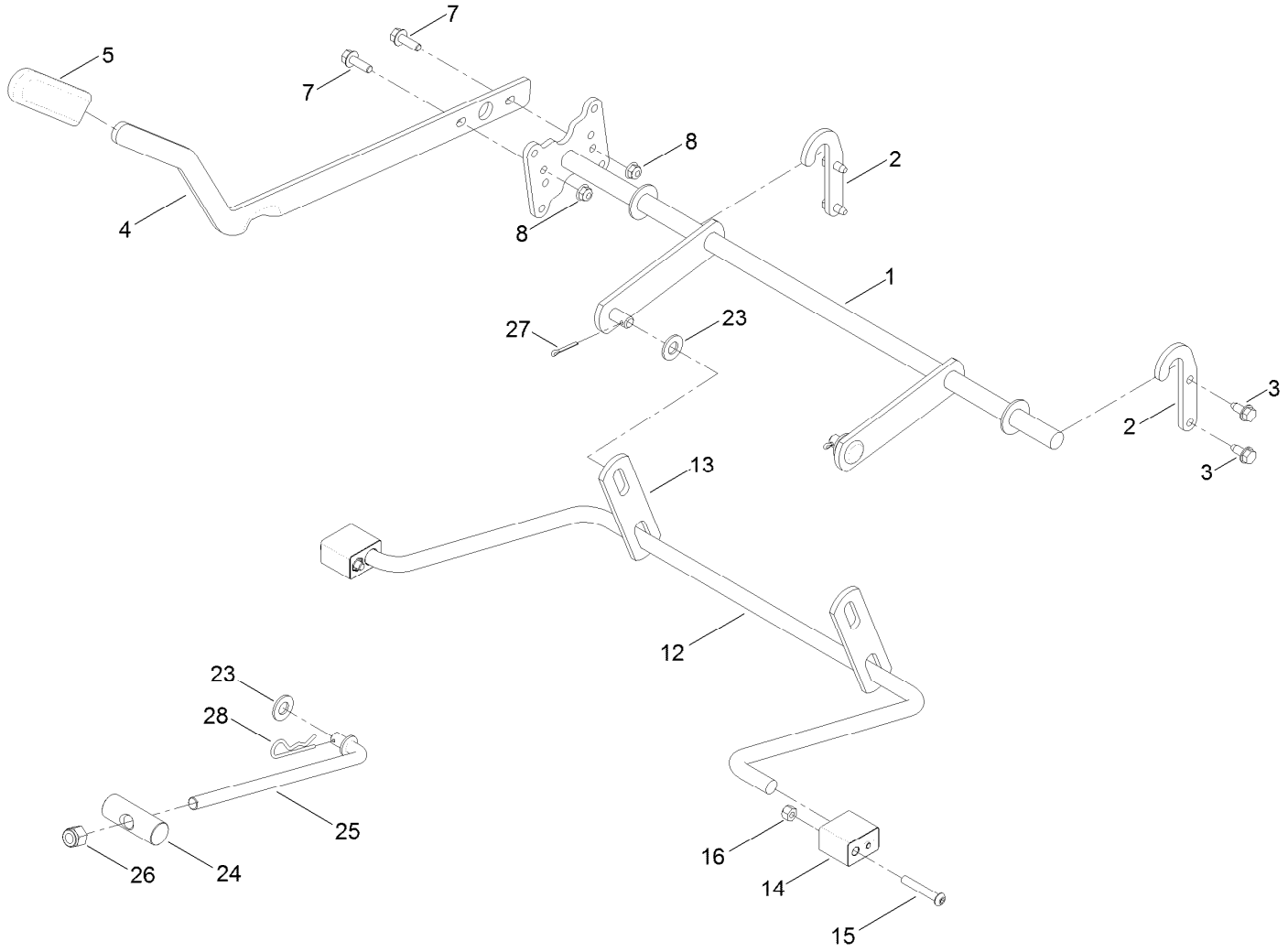

Deck Lift Assembly (continued)

Ref.	Part Number	Qty.	Description
1	132-6878-03	1	Lift-Deck, Wide
2	119-8875	2	Bracket-Lift
3	32144-70	4	Screw-HWHTF
4	119-3427-03	1	Lever-Lift
5	1-633268	1	Grip-Lever
7	3234-29	2	Screw-HHF
8	104-8300	2	Nut-HF, NI
12	119-3347	1	Arm-Lift, Rear (Wide)
13	108-7840	2	Link-Lift
14	108-7845	2	Block-Pivot
15	120-5499	2	Screw-HSBH
16	3296-29	2	Nut-Lock, NI
23	3256-26	3	Washer-Flat
24	119-8810	1	Pin-Pivot
25	133-4319	1	Rod-Mount, Deck
26	3296-19	1	Nut-Hex
27	3272-11	2	Pin-Cotter
28	1-806005	1	Pin-Cotter

Caster, Wheel and Tire Assembly

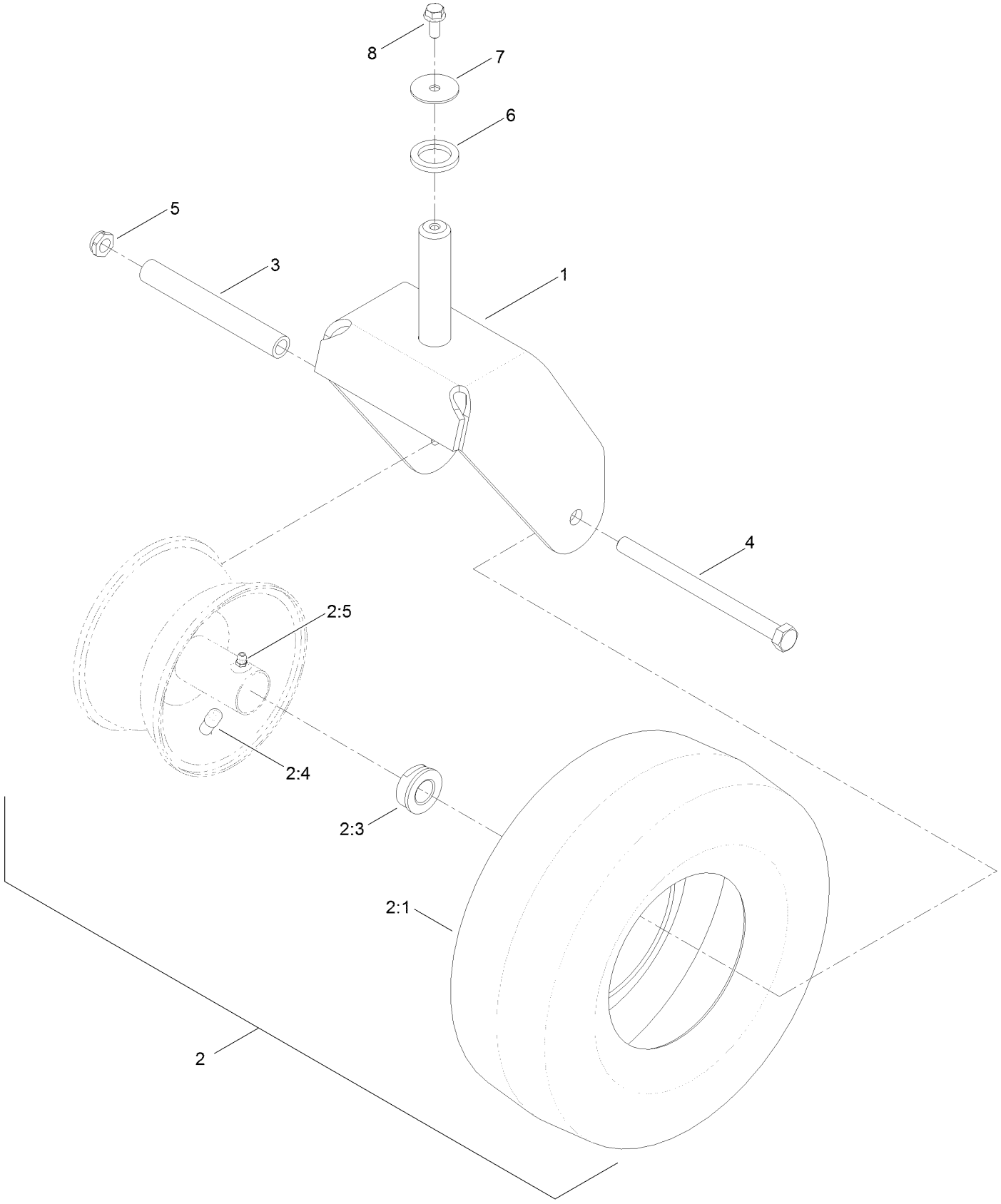

Caster, Wheel and Tire Assembly (continued)

Ref.	Part Number	Qty.	Description
1	119-3349-01	2	Fork-Caster
2	119-3473	2	13 Inch Wheel And Tire ASM
2:1	119-3471	1	Tire-13 Inch
2:3	114-1640	2	Bushing-Flange
2:4	232-27	1	Stem-Valve
2:5	302-5	1	Fitting-Grease

Ref.	Part Number	Qty.	Description
2:99	232-46	1	Tube-Inner ●
3	119-3475	2	Spanner
4	325-37	2	Screw-HH
5	3296-45	2	Nut-Hex
6	117-7394	2	Washer-Thrust
7	3256-68	2	Washer-Flat
8	3234-47	2	Screw-HHF

● Not illustrated

Traction Drive Assembly

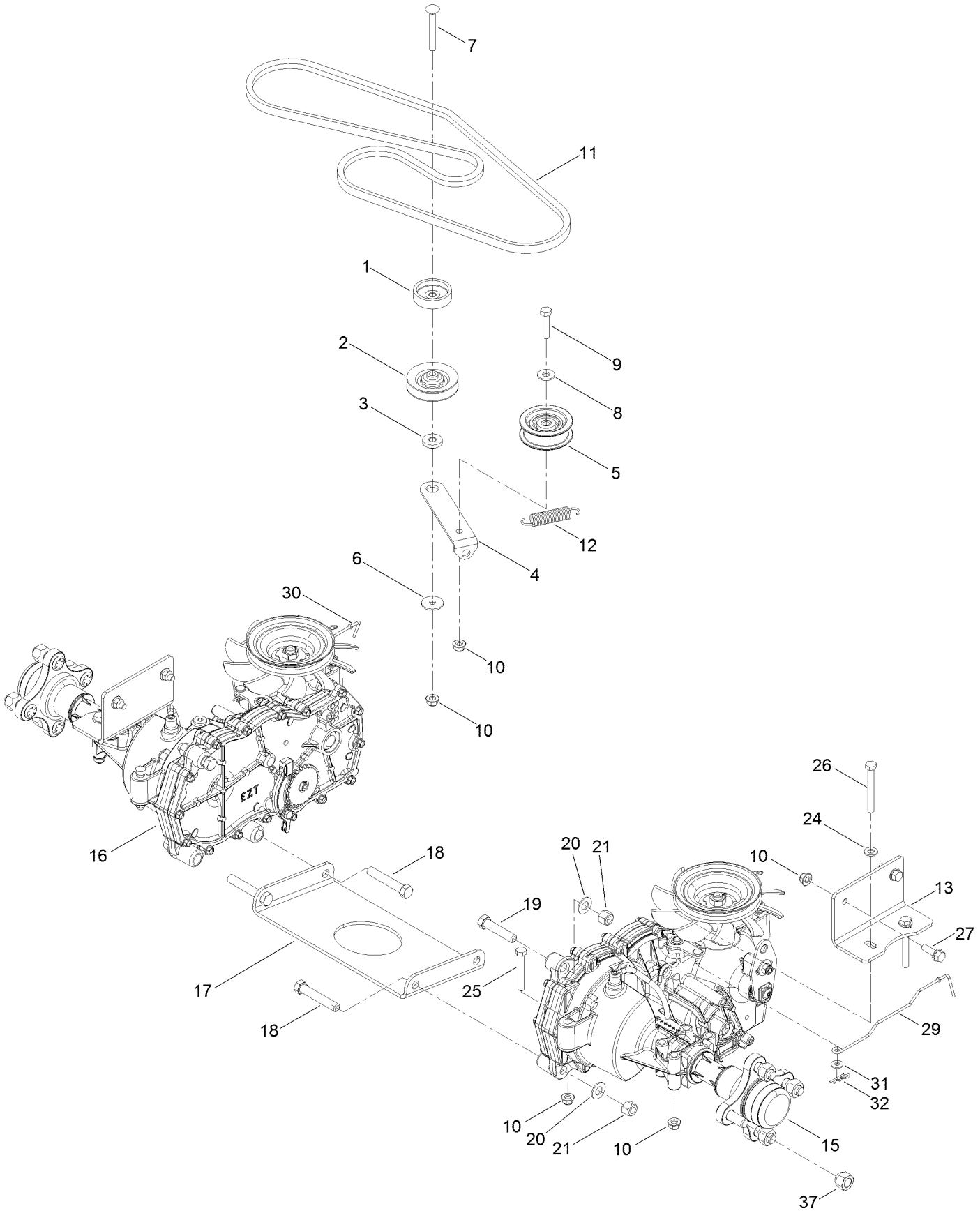

Traction Drive Assembly (continued)

Ref.	Part Number	Qty.	Description
1	119-3353	1	Spacer
2	119-8822	1	Pulley-Idler
3	119-3327	1	Spacer-Arm, Idler
4	119-3326	1	Arm-Idler
5	106-2176	1	Pulley-Idler
6	5-4460	1	Washer-Pivot
7	3230-8	1	Screw-CARR
8	3256-3	1	Washer-Flat
9	322-7	1	Screw-HH
10	104-8300	14	Nut-HF, NI
11	130-6976	1	V-Belt
12	104-6415	1	Spring-Return, Pedal
13	117-7264-03	2	Mount-Hydro
15	119-3350	1	LH Hydro Transaxle ASM
16	119-3351	1	RH Hydro Transaxle ASM
17	119-3342-03	1	Plate-Cross, Hydro
18	324-10	4	Screw-HH
19	324-8	2	Screw-HH
20	3256-25	6	Washer-Flat
21	3296-48	6	Nut-Lock, NI
24	3256-23	6	Washer-Plain
25	322-11	4	Screw-HH
26	322-13	4	Screw-HH
27	3234-29	4	Screw-HHF
29	131-0900	1	Rod-Bypass, LH
30	130-7049	1	Rod-Bypass, RH
31	119-8952	2	Washer
32	3290-307	2	Pin-Cotter
37	242-50	8	Nut-Lug

Left Hand Hydro Transaxle Assembly No. 119-3350

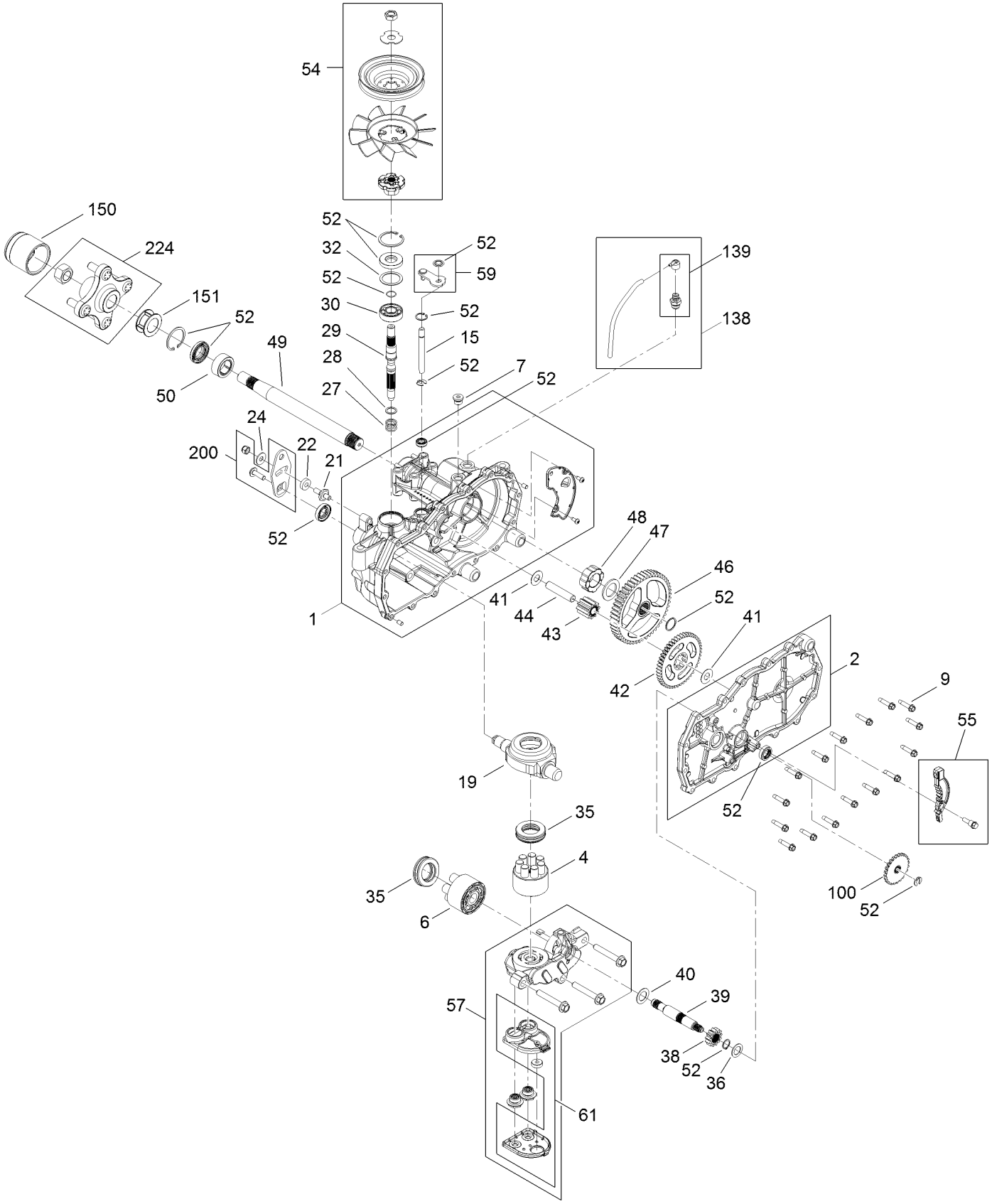

Left Hand Hydro Transaxle Assembly No. 119-3350 (continued)

Ref.	Part Number	Qty.	Description
1	106-8695	1	Main Housing ASM
2	106-8696	1	Side ASM
4	110-8561	1	Pump Block ASM
6	103-2666	1	Cylinder Block Kit
7	104-2189	1	Plug-Thread, Straight
9	104-5305	16	Screw-HHF
15	106-8678	1	Rod-Bypass
19	104-5304	1	Swashplate-Trunnion
21	104-2116	1	Stud
22	112-9853	1	Puck-Friction
24	114-8491	1	Washer
27	120-5537	1	Spring-Compression
28	120-5538	1	Washer
29	104-5306	1	Shaft-Input
30	104-5311	1	Bearing-Ball
32	104-5308	1	Spacer
35	94-6922	2	Bearing-Thrust
36	104-5339	1	Washer-Flat
38	104-5316	1	Gear-Pinnion, 13T
39	106-8683	1	Shaft-Motor
40	104-5360	1	Washer
41	119-5541	2	Washer
42	104-5317	1	Gear-10T/48T
43	104-5318	1	Gear-Jackshaft, 10T
44	104-5329	1	Pin-Jackshaft
46	112-9855	1	Gear-52T, Bull
47	112-9856	1	Washer
48	112-9857	1	Bearing-Sleeve
49	120-7104	1	Shaft-Axle
50	112-9859	1	Bushing-Axle
52	106-8686	1	Seal Kit ●
54	121-5746	1	Fan Pulley Kit
55	106-8688	1	Brake Arm Kit
57	112-9861	1	Center Section Filter Kit
58	104-2147	1	Sealant ●
59	120-5549	1	Bypass Kit
61	114-1634	1	Filter Kit
100	106-8694	1	Disc-Brake, Cog
138	112-9866	1	Breather Kit
139	114-1635	1	Breather ASM
150	115-5057	1	Cover-Nut, Axle
151	120-7109	1	Tube-Axle
200	117-5362	1	Control Arm Kit
224	109-5939	1	Hub Kit

● Not illustrated

Right Hand Hydro Transaxle Assembly No. 119-3351

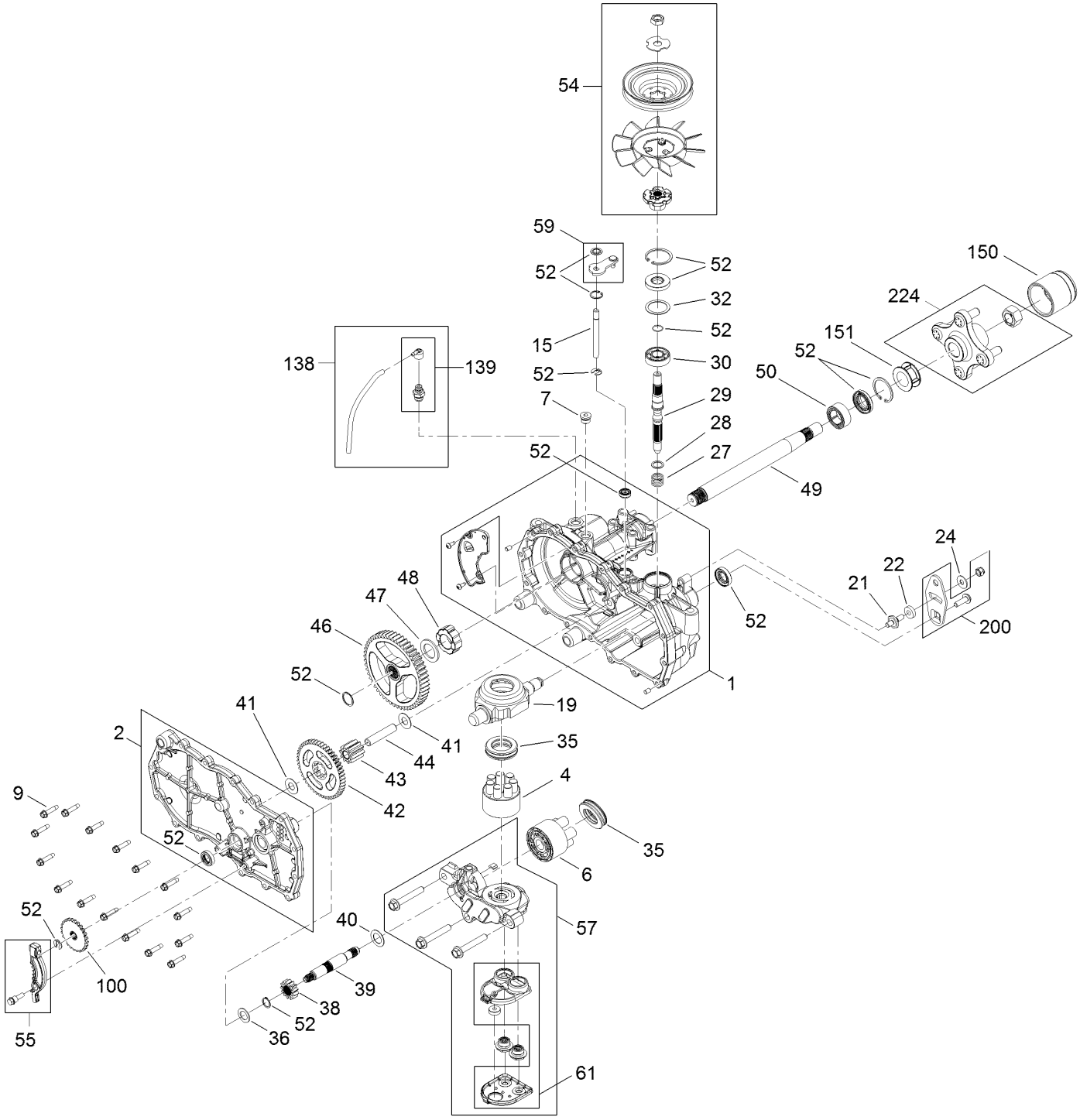

Right Hand Hydro Transaxle Assembly No. 119-3351 (continued)

Ref.	Part Number	Qty.	Description
1	106-8674	1	Main Housing ASM
2	106-8675	1	Side ASM
4	110-8561	1	Pump Block ASM
6	103-2666	1	Cylinder Block Kit
7	104-2189	1	Plug-Thread, Straight
9	104-5305	16	Screw-HHF
15	106-8678	1	Rod-Bypass
19	104-5304	1	Swashplate-Trunnion
21	104-2116	1	Stud
22	112-9853	1	Puck-Friction
24	114-8491	1	Washer
27	120-5537	1	Spring-Compression
28	120-5538	1	Washer
29	104-5306	1	Shaft-Input
30	104-5311	1	Bearing-Ball
32	104-5308	1	Spacer
35	94-6922	2	Bearing-Thrust
36	104-5339	1	Washer-Flat
38	104-5316	1	Gear-Pinnion, 13T
39	106-8683	1	Shaft-Motor
40	104-5360	1	Washer
41	119-5541	2	Washer
42	104-5317	1	Gear-10T/48T
43	104-5318	1	Gear-Jackshaft, 10T
44	104-5329	1	Pin-Jackshaft
46	112-9855	1	Gear-52T, Bull
47	112-9856	1	Washer
48	112-9857	1	Bearing-Sleeve
49	120-7104	1	Shaft-Axle
50	112-9859	1	Bushing-Axle
52	106-8686	1	Seal Kit ●
54	121-5746	1	Fan Pulley Kit
55	106-8688	1	Brake Arm Kit
57	112-9862	1	Center Section Filter Kit
58	104-2147	1	Sealant ●
59	107-2489	1	Bypass Arm Kit
61	114-1634	1	Filter Kit
100	106-8694	1	Disc-Brake, Cog
138	112-9866	1	Breather Kit
139	114-1635	1	Breather ASM
150	115-5057	1	Cover-Nut, Axle
151	120-7109	1	Tube-Axle
200	117-5362	1	Control Arm Kit
224	109-5939	1	Hub Kit

● Not illustrated

Brake Assembly

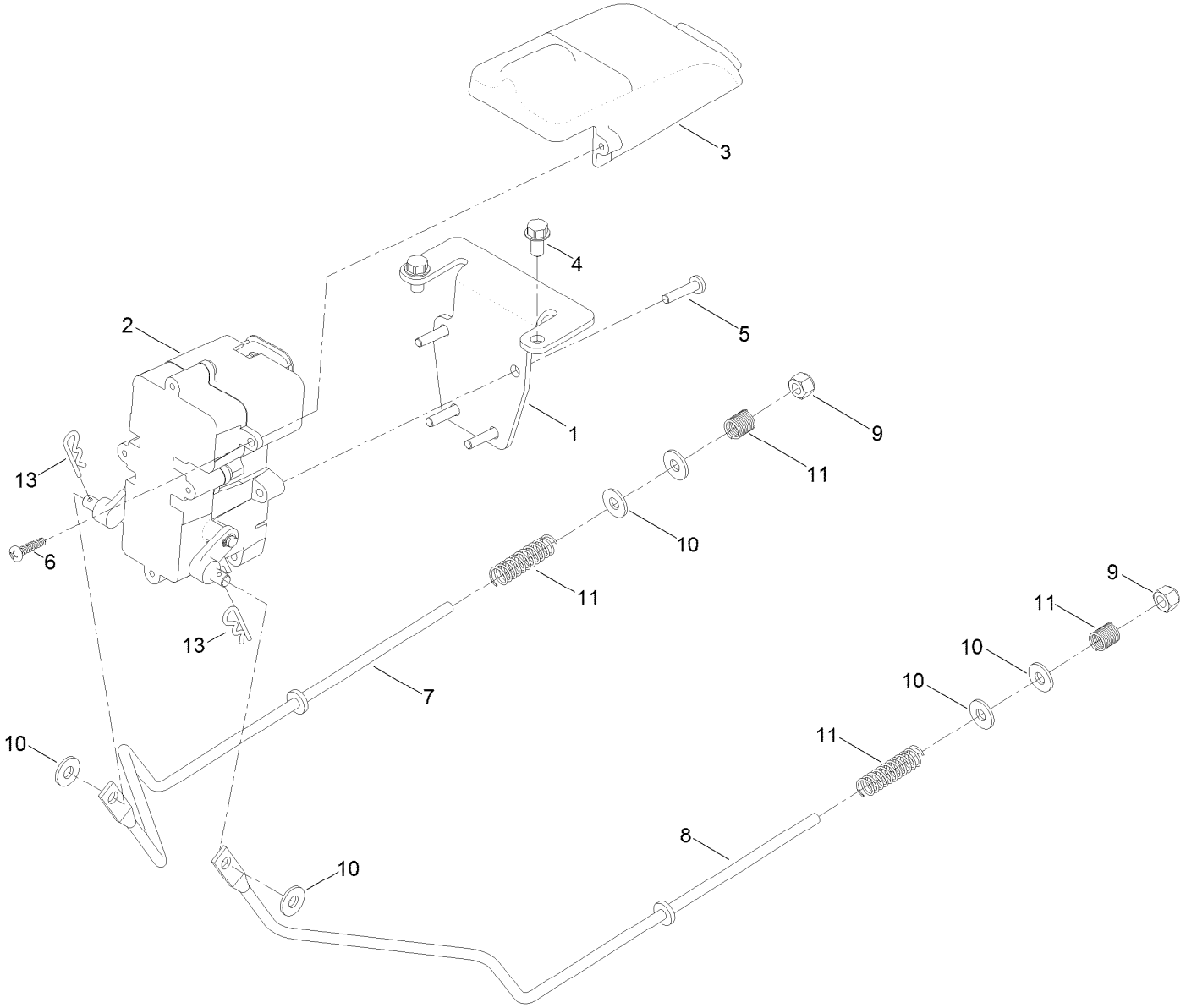

Brake Assembly (continued)

Ref.	Part Number	Qty.	Description
1	130-0790-03	1	Bracket-Mount, Brake
2	136-4213	1	Brake Box ASM
3	132-6949	1	Cover-Connector
4	32144-4	2	Screw-HWH
5	32144-36	4	Screw-PPH
6	94-4496	2	Screw-PPH
7	121-2976	1	Rod-Brake, Wide (RH)
8	121-2977	1	Rod-Brake, Wide (LH)
9	3296-42	2	Nut-Lock, NI
10	119-8952	6	Washer
11	117-1169	4	Spring-Compression
13	3290-307	2	Pin-Cotter

Rear Tire Assembly

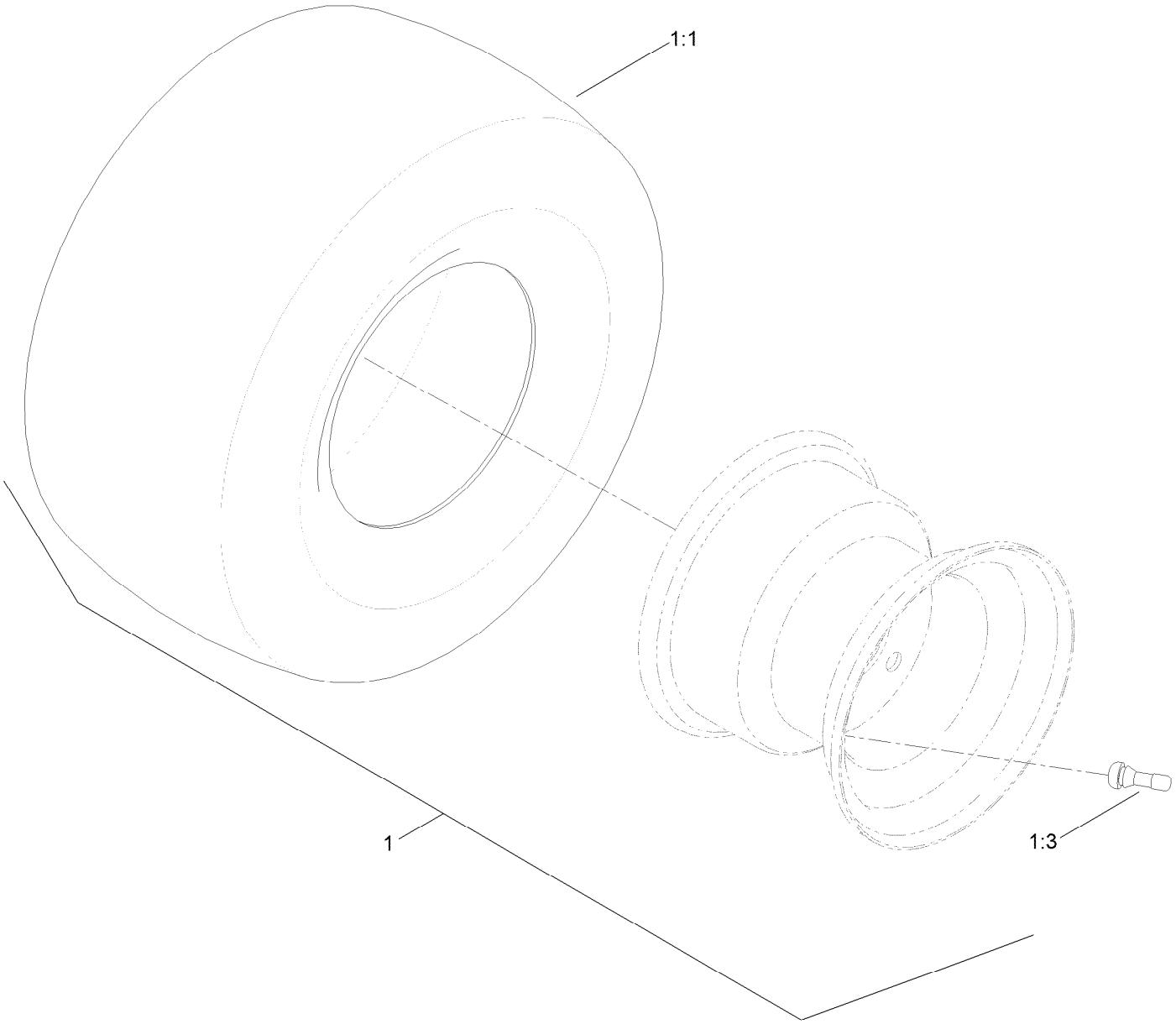

Rear Tire Assembly (continued)

Ref.	Part Number	Qty.	Description
1	131-3672	2	2 Ply Tire And Wheel ASM
1:1	131-3679	1	Tire-2Ply
1:3	232-27	1	Stem-Valve
1:99	232-37	1	Tube ●

● Not illustrated

Seat Pan Assembly

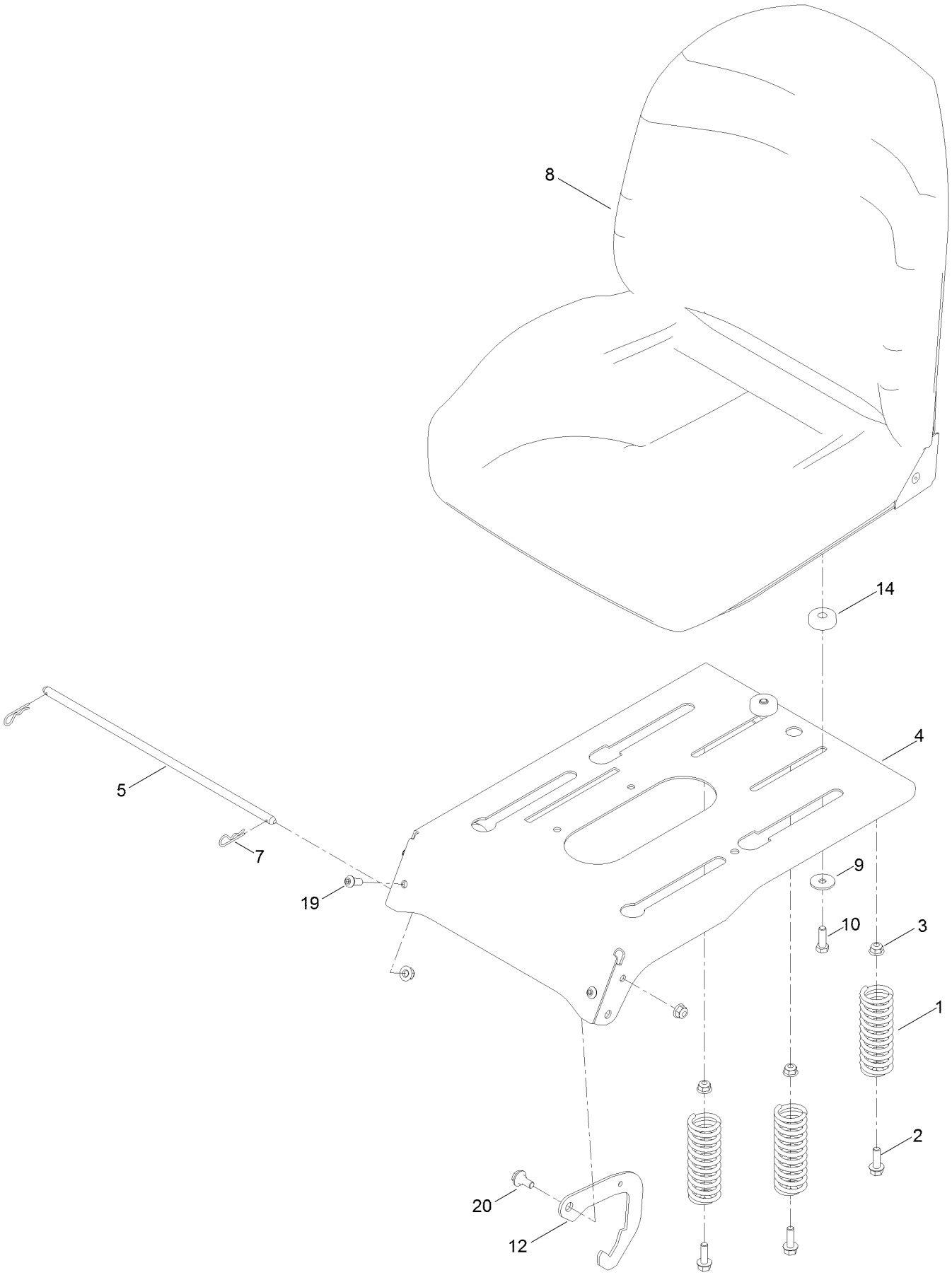

Seat Pan Assembly (continued)

Ref.	Part Number	Qty.	Description
1	92-7054	3	Spring-Compression
2	3234-29	3	Screw-HHF
3	104-8300	7	Nut-HF, NI
4	136-5571-03	1	Pan-Seat, Deluxe
5	119-3433	1	Rod-Pivot, Narrow
7	3290-250	2	Pin-Cotter
8	136-5575	1	Seat ASM
9	5-4460	2	Washer-Pivot
10	322-5	2	Screw-HH
12	132-9353	2	Latch-Seat
14	136-5572	2	Bushing-Slide, Seat
19	3274-55	2	Screw-HSBH
20	19-1470	2	Screw-Shoulder

Motion Control Assembly

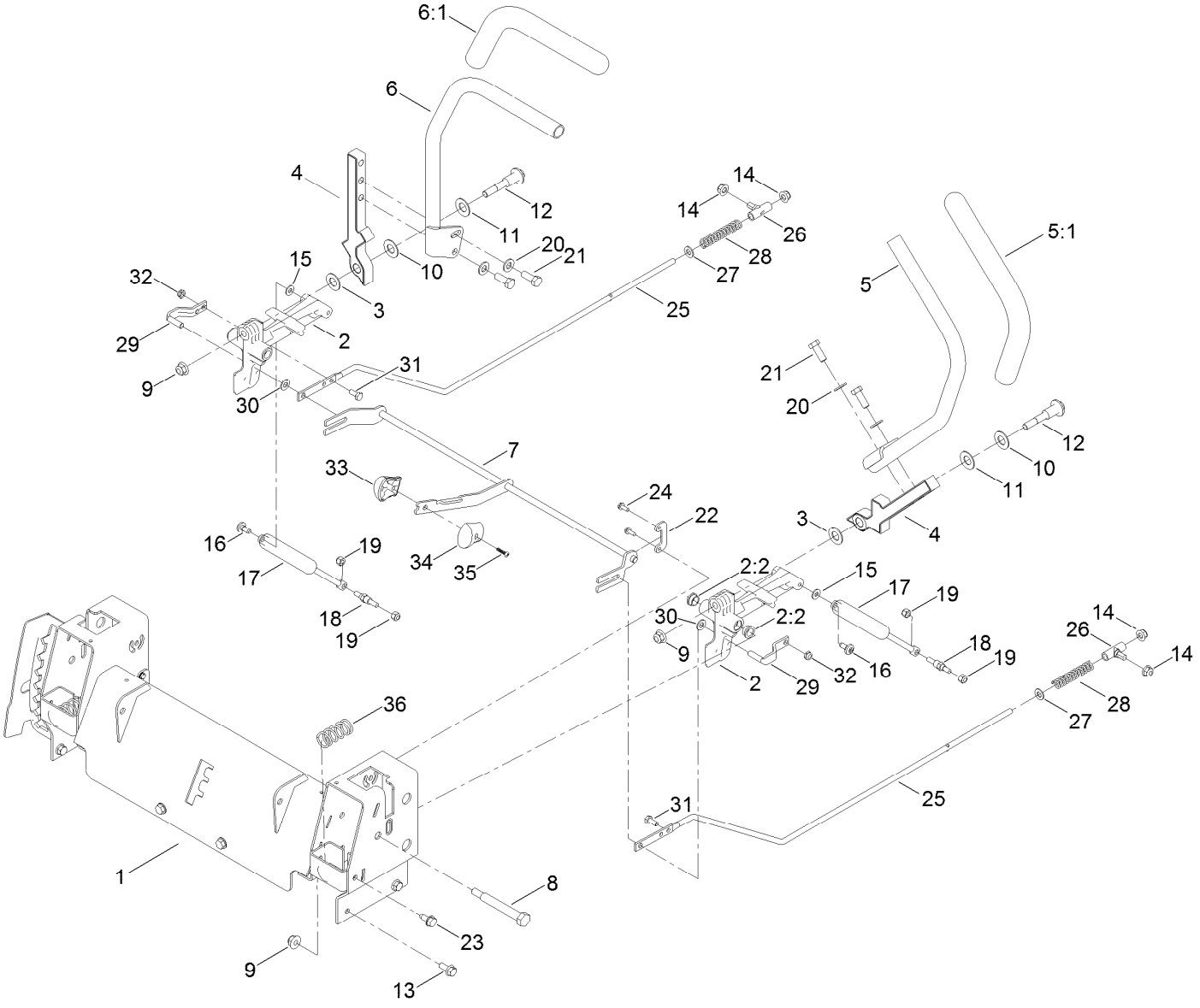

Motion Control Assembly (continued)

Ref.	Part Number	Qty.	Description
1	137-7038-03	1	Control Box ASM
2	119-3470	2	Actuator Arm ASM
2:2	256-156	2	Bushing-Flange
3	120-2273	2	Washer-Nylon
4	133-9299-05	2	Arm-Control
5	133-7055	1	Handle-Control, LH
5:1	121-0726	1	Grip
6	133-7057	1	Handle-Control, RH
6:1	121-0726	1	Grip
7	133-9301	1	Speed Control ASM
8	115-5099	2	Bolt-Pivot
9	104-8301	4	Nut-HF, NI
10	117-1240	2	Washer
11	119-8925	2	Washer-Belleville
12	117-1198	2	Bolt-Pivot
13	3234-47	6	Screw-HHF
14	104-8300	10	Nut-HF, NI
15	119-8952	2	Washer
16	120-7950	2	Screw-Shoulder
17	131-4132	2	Damper
18	110-6810	2	Stud-Damper
19	3296-42	4	Nut-Lock, NI
20	3256-24	4	Washer-Flat
21	323-6	4	Screw-HH
22	117-5385	2	Retainer
23	32144-70	4	Screw-HWHTF
24	32144-1	4	Screw-Taptite
25	117-5388	2	Rod-Hydro
26	119-8842	2	Mount-Rod, Hydro
27	3256-23	2	Washer-Plain
28	1-603807	2	Spring-Return, Neutral
29	121-1753	2	Pin-Rod, Hydro
30	93-6079	2	Spacer-Nylon
31	321-3	2	Screw-HH
32	3296-56	2	Nut-Lock, NI
33	132-9368	1	Knob-RH
34	132-9369	1	Knob-LH
35	94-4496	1	Screw-PPH
36	119-8876	2	Spring-Return

Engine Assembly

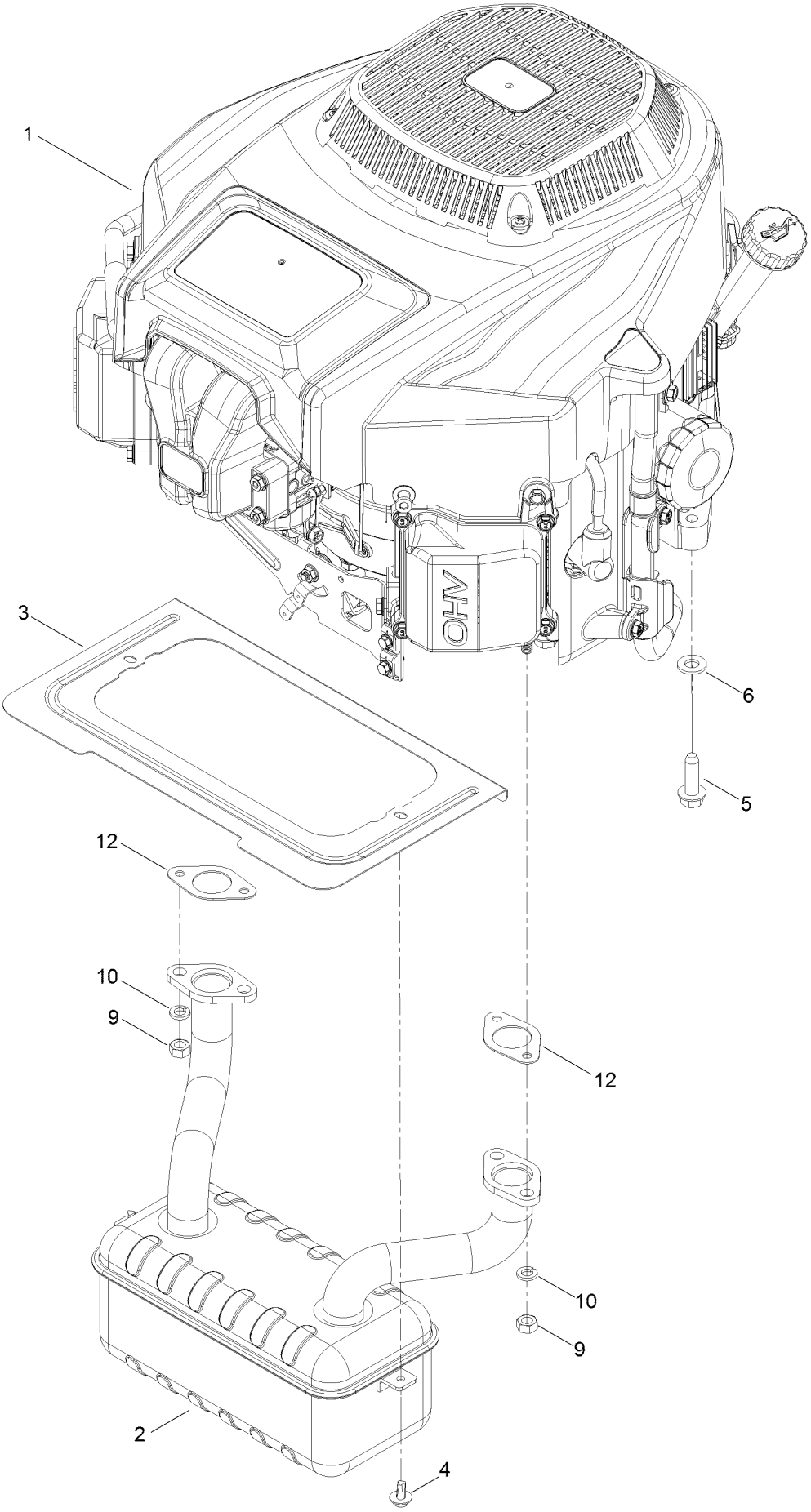

Engine Assembly (continued)

Ref.	Part Number	Qty.	Description
1	127-9041	1	Engine-2P77F
2	130-6851	1	Muffler
3	131-1071-03	1	Shield-Heat
4	46-8560	2	Screw-HHFTF
5	32144-109	4	Screw-Thd Form HWH
6	3256-24	3	Washer-Flat
9	121-0199	4	Nut-HH
10	127-9279	4	Washer-Lock, Split
12	120-4317	2	Gasket-Exhaust

Fuel System Assembly

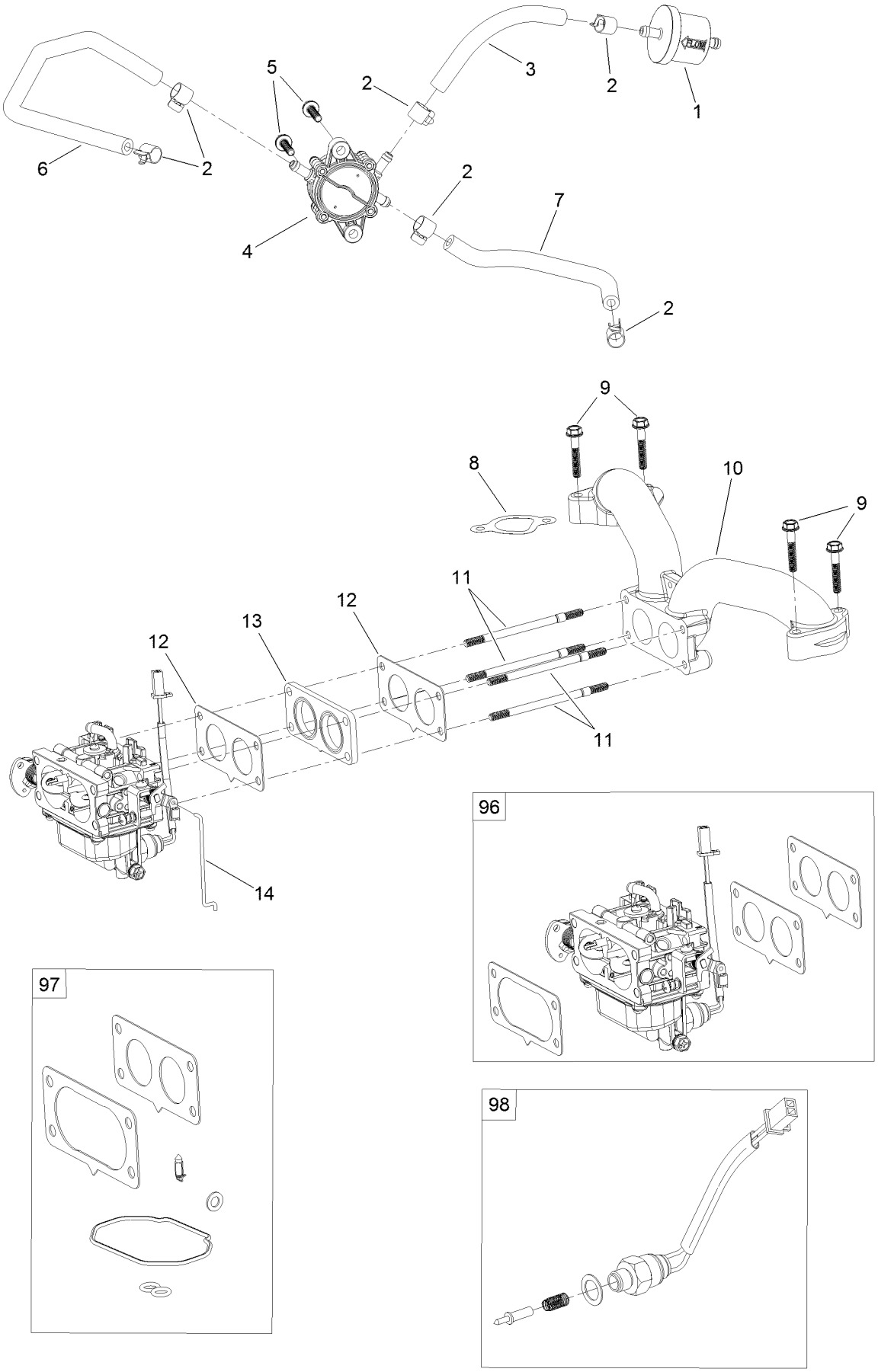

Fuel System Assembly (continued)

Ref.	Part Number	Qty.	Description
1	133-1563	1	Filter-Fuel
2	120-4251	6	Clamp-Fuel Line
3	120-4371	1	Line-Fuel
4	127-9206	1	Pump-Fuel
5	120-4225	2	Screw-HHF
6	127-9205	1	Hose-Fuel
7	127-9207	1	Hose-Fuel
8	127-9230	2	Gasket-Intake
9	120-4284	4	Screw-HHF
10	127-9244	1	Manifold-Intake
11	127-9245	4	Stud
12	127-9246	2	Gasket-Carburetor
13	127-9247	1	Insulator-Carburetor
14	127-9248	1	Linkage-Throttle
96	127-9289	1	Carburetor Replacement Kit
97	127-9290	1	Carburetor Repair Kit
98	127-9292	1	Solenoid Kit
99	127-9303	1	High Altitude Kit ●

● Not illustrated

Carburetor Assembly

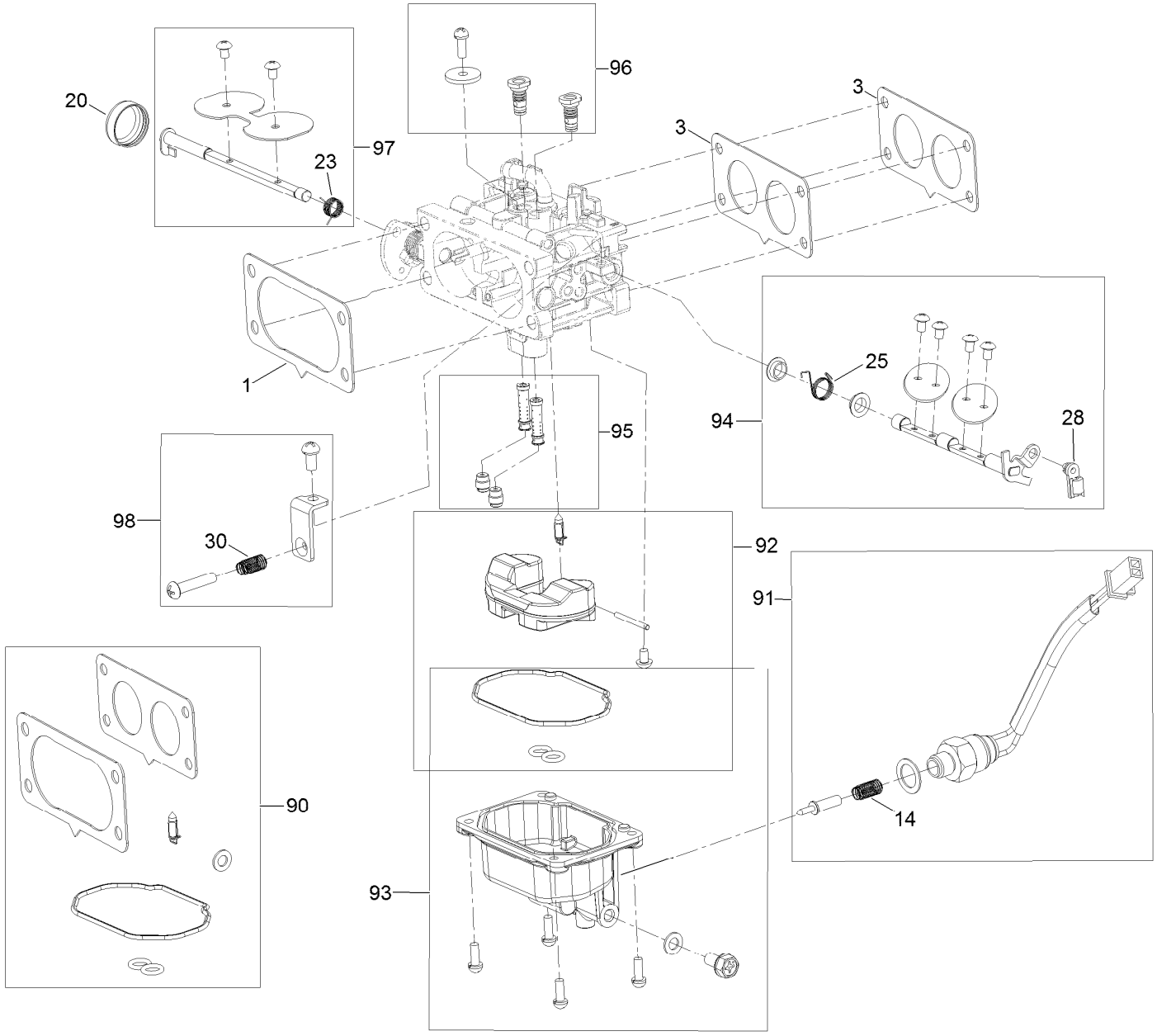

Carburetor Assembly (continued)

Ref.	Part Number	Qty.	Description
1	127-9251	1	Gasket-Carburetor
3	127-9246	2	Gasket-Carburetor
14	127-9319	1	Spring
20	127-9325	1	Cover-Shaft, Choke
23	127-9328	1	Spring
25	127-9330	1	Spring
28	127-9333	1	Clamp-Lock
30	127-9335	1	Spring
90	127-9290	1	Carburetor Repair Kit

Ref.	Part Number	Qty.	Description
91	127-9292	1	Solenoid Kit
92	127-9340	1	Float Kit
93	127-9341	1	Bowl Kit
94	127-9342	1	Throttle Shaft Kit
95	127-9343	1	Nozzle And Jet Kit
96	127-9344	1	Air Jet Kit
97	127-9345	1	Choke Shaft Kit
98	127-9347	1	Idlestop Kit

Air Intake and Filtration Assembly

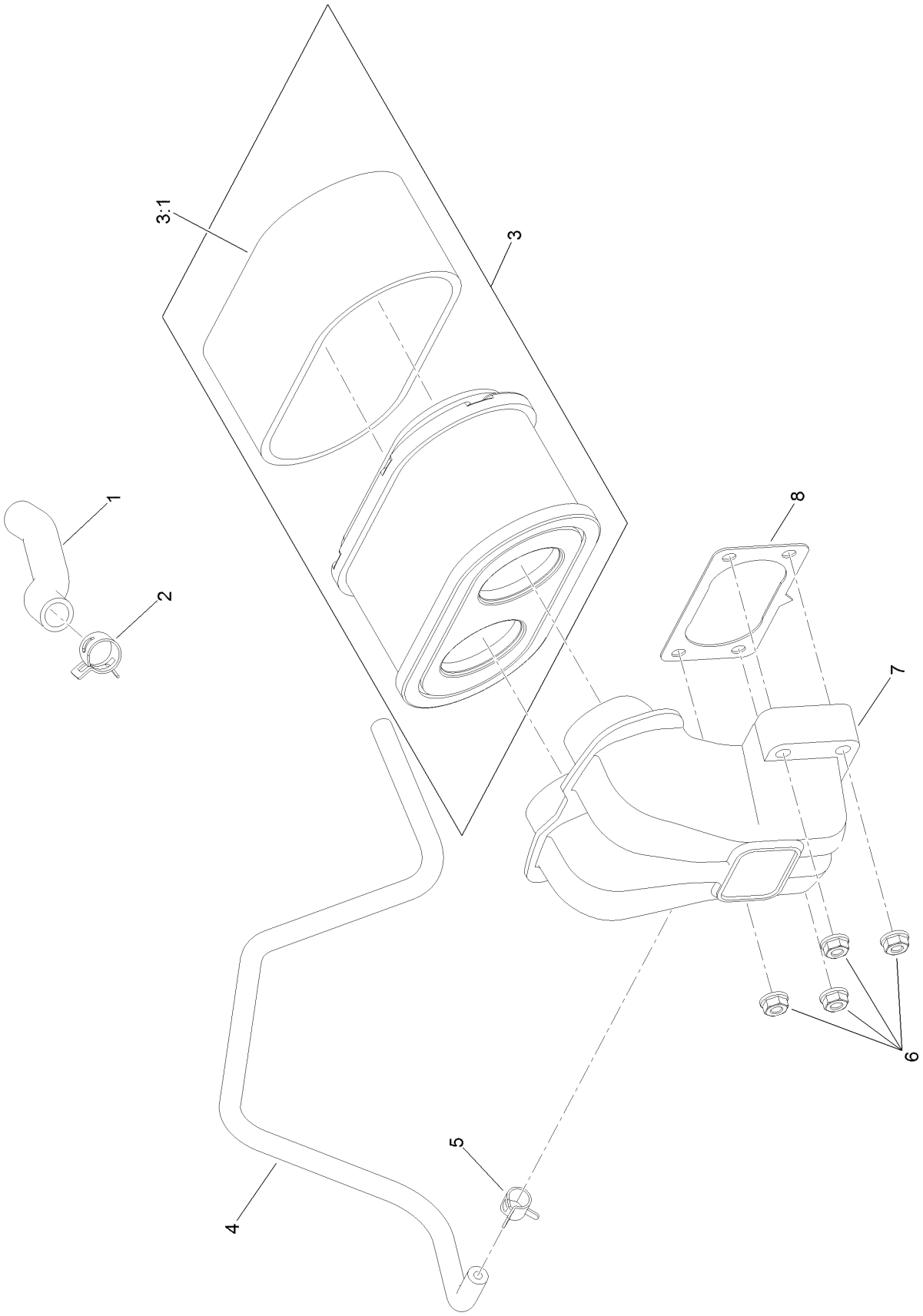

Air Intake and Filtration Assembly (continued)

Ref.	Part Number	Qty.	Description
1	127-9235	1	Tube-Breather
2	127-9234	2	Clamp-Hose
3	127-9252	1	Filter-Air, Complete
3:1	127-9288	1	Filter-Pre, Foam
4	127-9253	1	Hose-Fuel
5	127-9187	1	Clamp-Hose
6	120-4236	4	Nut-Flange
7	127-9047	1	Manifold-Filter, Air
8	127-9251	1	Gasket-Carburetor

Ignition and Electrical Assembly

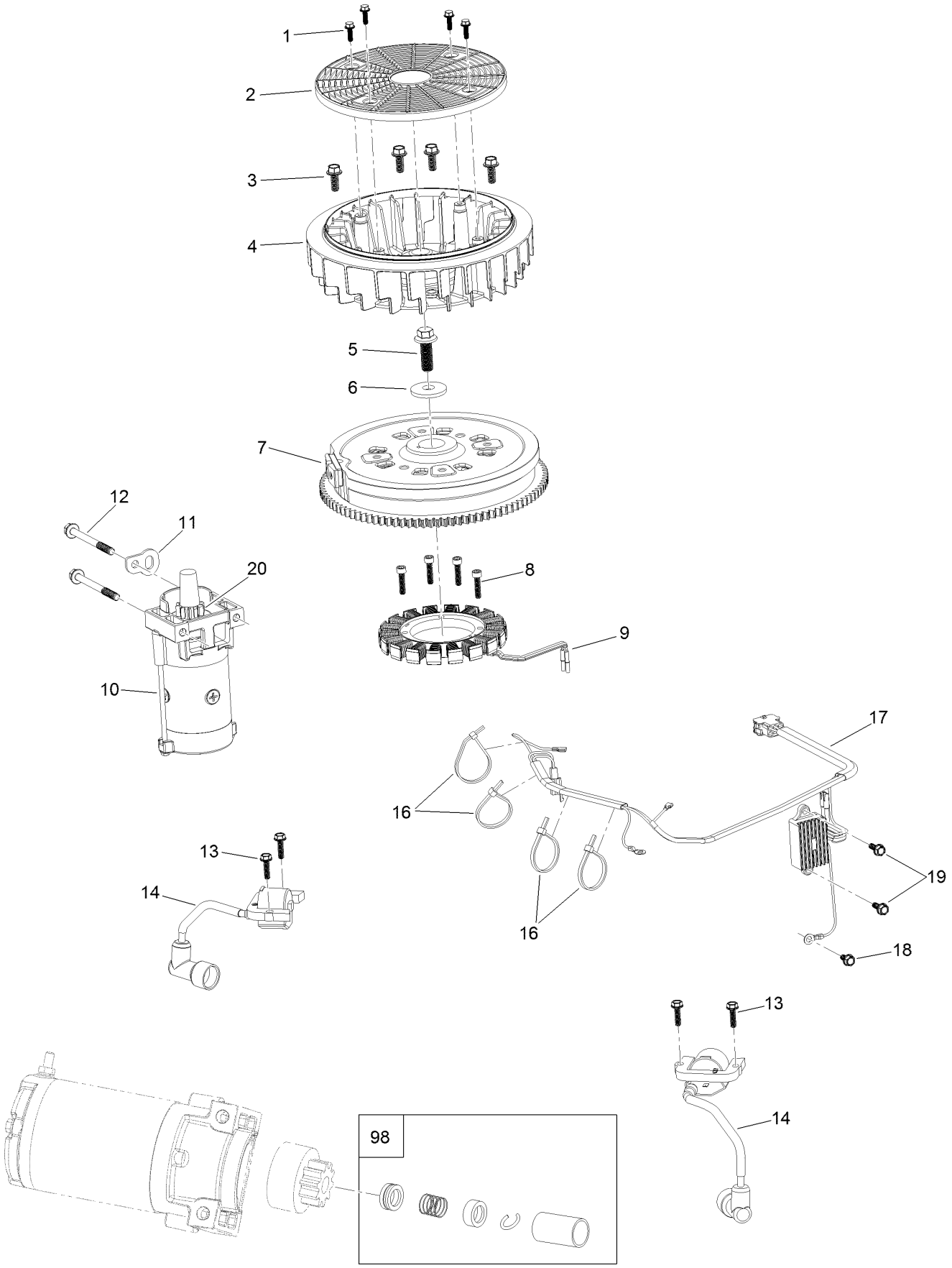

Ignition and Electrical Assembly (continued)

Ref.	Part Number	Qty.	Description
1	127-9197	4	Screw-HWH
2	127-9198	1	Screen-Rotating
3	127-9199	4	Screw-HWH
4	127-9200	1	Fan-Cooling
5	127-9201	1	Screw-HWH
6	127-9202	1	Washer-Flat
7	127-9306	1	Flywheel
8	127-9210	4	Screw-HSH
9	127-9211	1	Alternator
10	133-9828	1	Motor-Starter
11	127-9208	1	Bracket-Lift
12	120-4231	2	Screw-HHF
13	121-0007	4	Bolt-Flange
14	127-9216	2	Ignition Coil ASM
16	127-9220	4	Tie-Zip
17	127-9219	1	Regulator-Voltage W/Harness
18	120-4216	1	Screw-HHF
19	120-4232	2	Screw-HHF
20	133-1562	1	Pinion-Starter
98	133-1566	1	Starter Repair Kit

Crankcase and Crankshaft Assembly

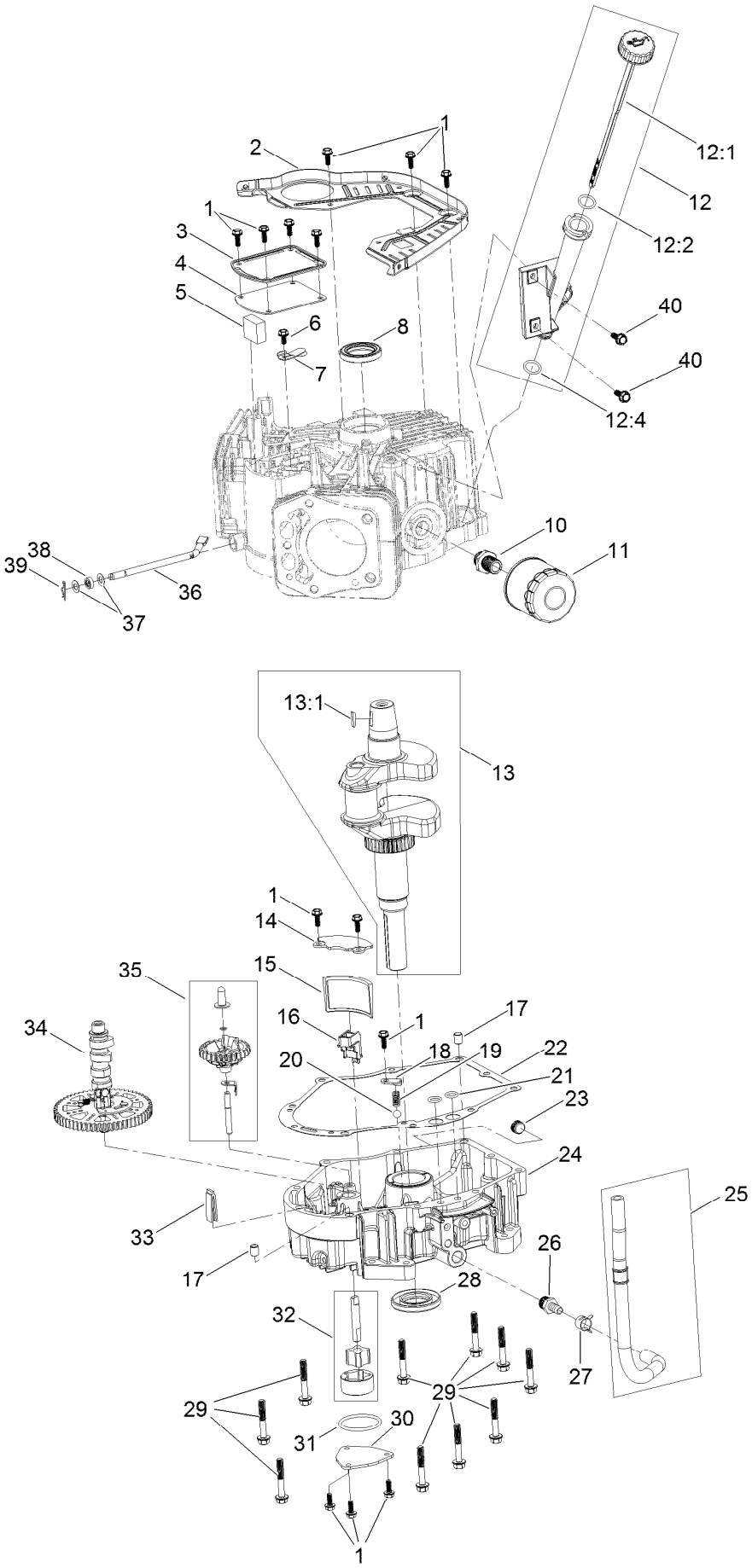

Crankcase and Crankshaft Assembly (continued)

Ref.	Part Number	Qty.	Description
1	120-4232	14	Screw-HHF
2	127-9212	1	Baffle
3	127-9213	1	Cover-Breather
4	127-9214	1	Gasket-Breather
5	127-9215	1	Filter-Breather
6	120-4216	1	Screw-HHF
7	127-9217	1	Valve-Breather
8	120-4267	1	Seal-Oil
10	120-4346	1	Adaptor-Filter, Oil
11	120-4276	1	Filter-Oil
12	127-9218	1	Oil Tube ASM
12:1	127-9283	1	Dipstick
12:2	127-9284	1	O-Ring
12:4	127-9286	1	O-Ring
13	127-9255	1	Crankshaft
13:1	120-4320	1	Key-Woodruff
14	127-9261	1	Cover-Screen, Oil
15	127-9262	1	Screen-Oil
16	127-9263	1	Retainer-Screen
17	120-4274	2	Pin-Dowel
18	127-9264	1	Plate-Retainer
19	127-9265	1	Spring
20	127-9266	1	Valve-Ball
21	120-4262	2	O-Ring
22	127-9267	1	Gasket-Cover, Crankcase
23	133-9805	1	Plug-Drain
24	127-9268	1	Cover-Crankcase
25	127-9293	1	Oil Drain Hose ASM
26	127-9275	1	Fitting-Hose
27	127-9276	1	Clamp-Hose
28	127-9271	1	Seal
29	121-0473	10	Screw-HHF
30	127-9274	1	Cover-Oil Pump
31	127-9273	1	O-Ring
32	127-9272	1	Oil Pump ASM
33	120-4275	1	Deflector-Oil, Rubber
34	133-1568	1	Camshaft
35	133-9807	1	Governor ASM
36	127-9238	1	Shaft-Governor
37	120-4258	2	Washer-Plain
38	120-4257	1	Seal-Oil
39	120-4256	1	Pin-Hair
40	120-4232	2	Screw-HHF

Governor Control Assembly

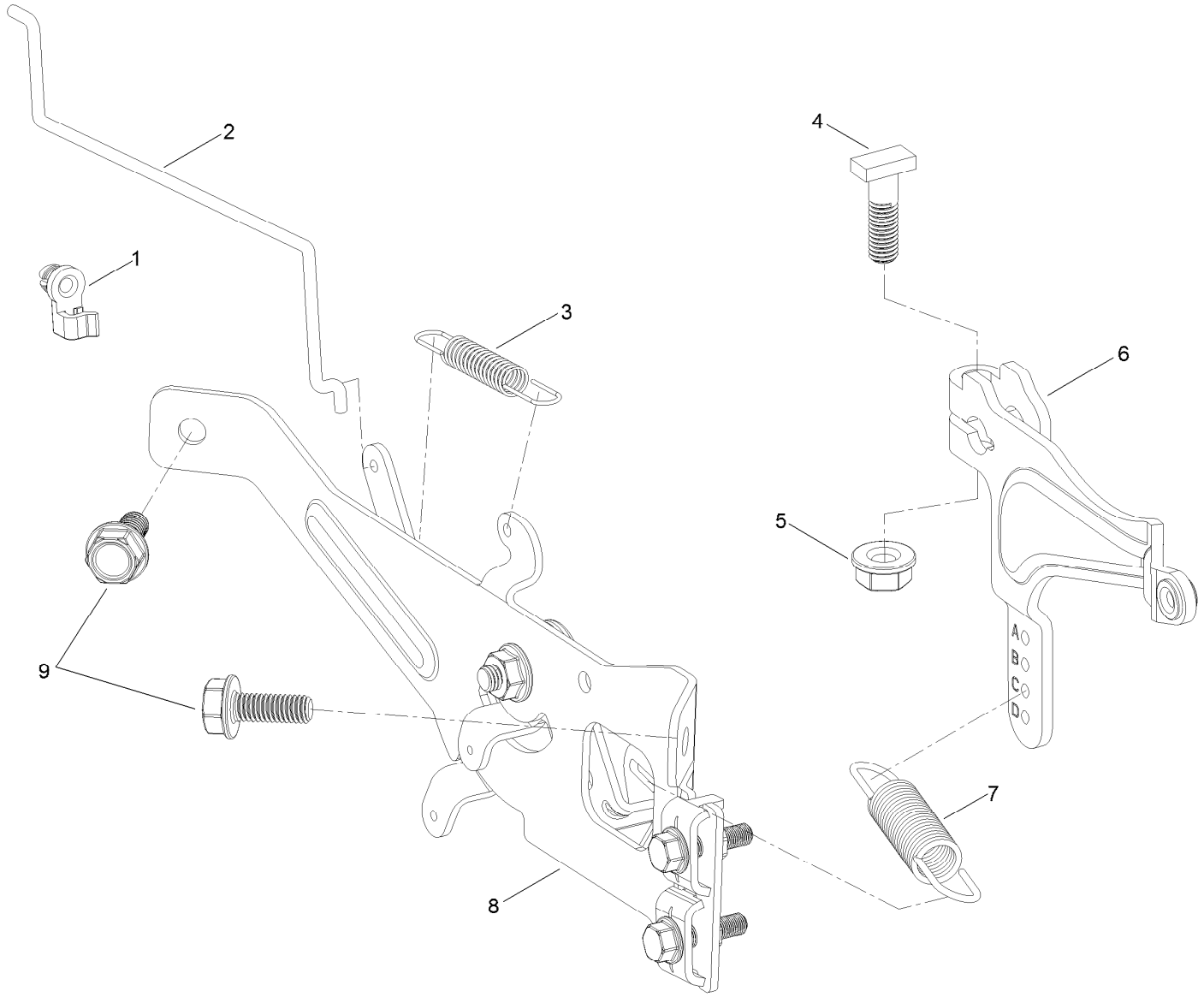

Governor Control Assembly (continued)

Ref.	Part Number	Qty.	Description
1	127-9250	1	Clip-Linkage
2	127-9242	1	Linkage-Choke
3	127-9241	1	Spring-Governor
4	120-4238	1	Bolt-Arm, Governor
5	120-4236	1	Nut-Flange
6	127-9239	1	Arm-Governor
7	133-9809	1	Spring-Governor
8	133-1570	1	Control Plate ASM
9	120-4232	2	Screw-HHF

Piston and Cylinder Head Assembly

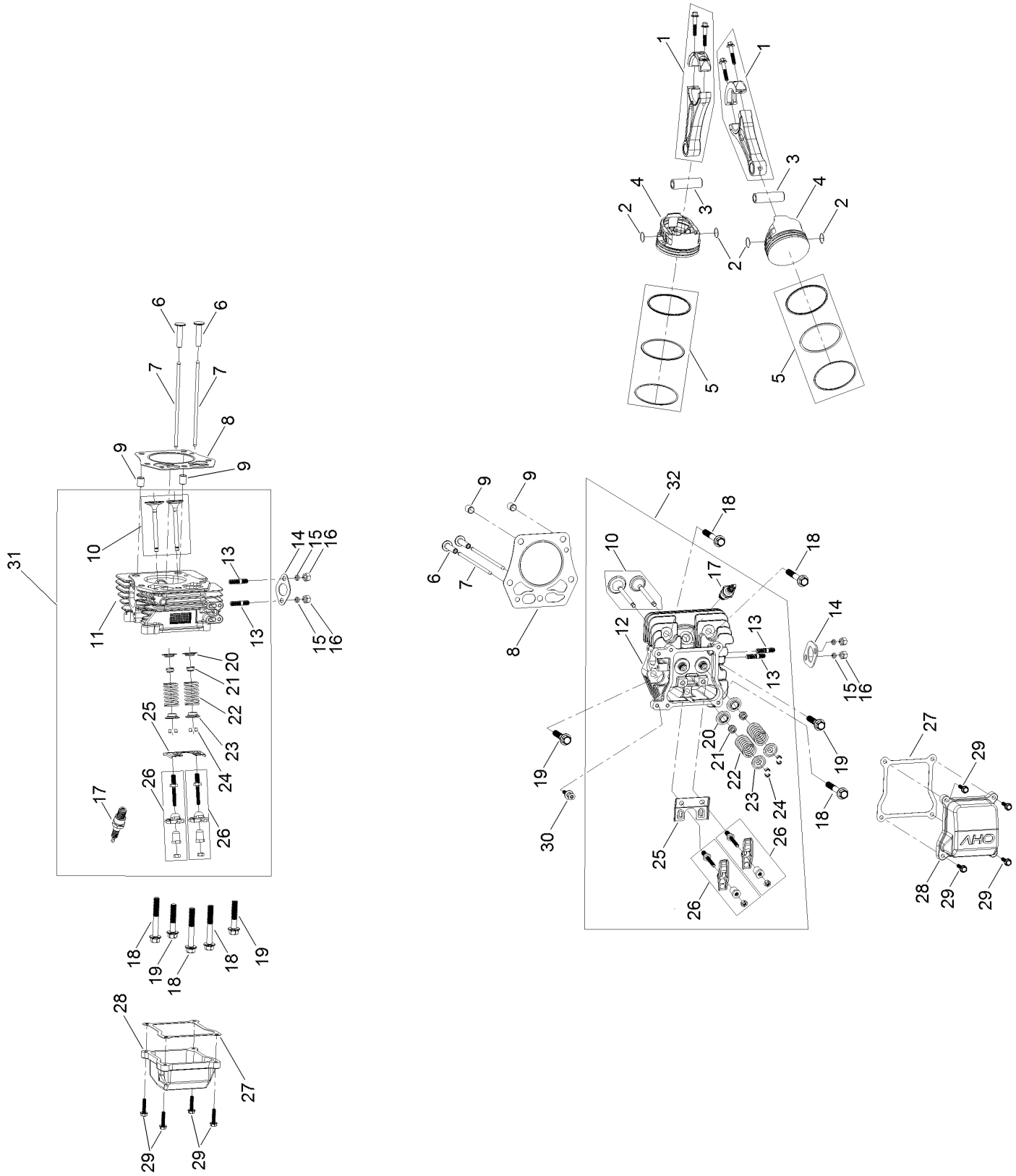

Piston and Cylinder Head Assembly (continued)

Ref.	Part Number	Qty.	Description
1	127-9256	2	Connecting Rod ASM
2	127-9258	4	Clip-Pin, Piston
3	127-9257	2	Pin-Piston
4	127-9259	2	Piston
5	127-9260	2	Piston Ring Set
6	127-9224	4	Lifter-Valve
7	127-9225	4	Rod-Push
8	127-9226	2	Gasket-Head, Cylinder
9	127-9227	4	Pin-Dowel
10	127-9228	2	Valve Set
11	127-9229	1	Head-Cylinder
12	127-9254	1	Head-Cylinder
13	121-0464	4	Stud-Exhaust
14	120-4317	2	Gasket-Exhaust
15	127-9279	4	Washer-Lock, Split
16	121-0199	4	Nut-HH
17	81-3250	2	Spark Plug
18	127-9231	6	Screw-HWH
19	127-9232	4	Screw-HWH
20	120-4303	4	Seat-Spring, Valve
21	120-4304	4	Seal-Stem, Valve
22	120-4305	4	Spring-Valve
23	120-4306	4	Retainer-Spring, Valve
24	120-4307	8	Keeper-Valve
25	127-9233	2	Plate-Guide, Push Rod
26	127-9294	4	Rocker Arm ASM
27	127-9295	2	Gasket-Valve Cover
28	127-9050	2	Cover-Valve
29	120-4225	8	Screw-HHF
30	120-4214	1	Screw-Shoulder, HH
31	133-9819	1	Right Head ASM
32	133-9820	1	Left Head ASM

Blower Housing Assembly

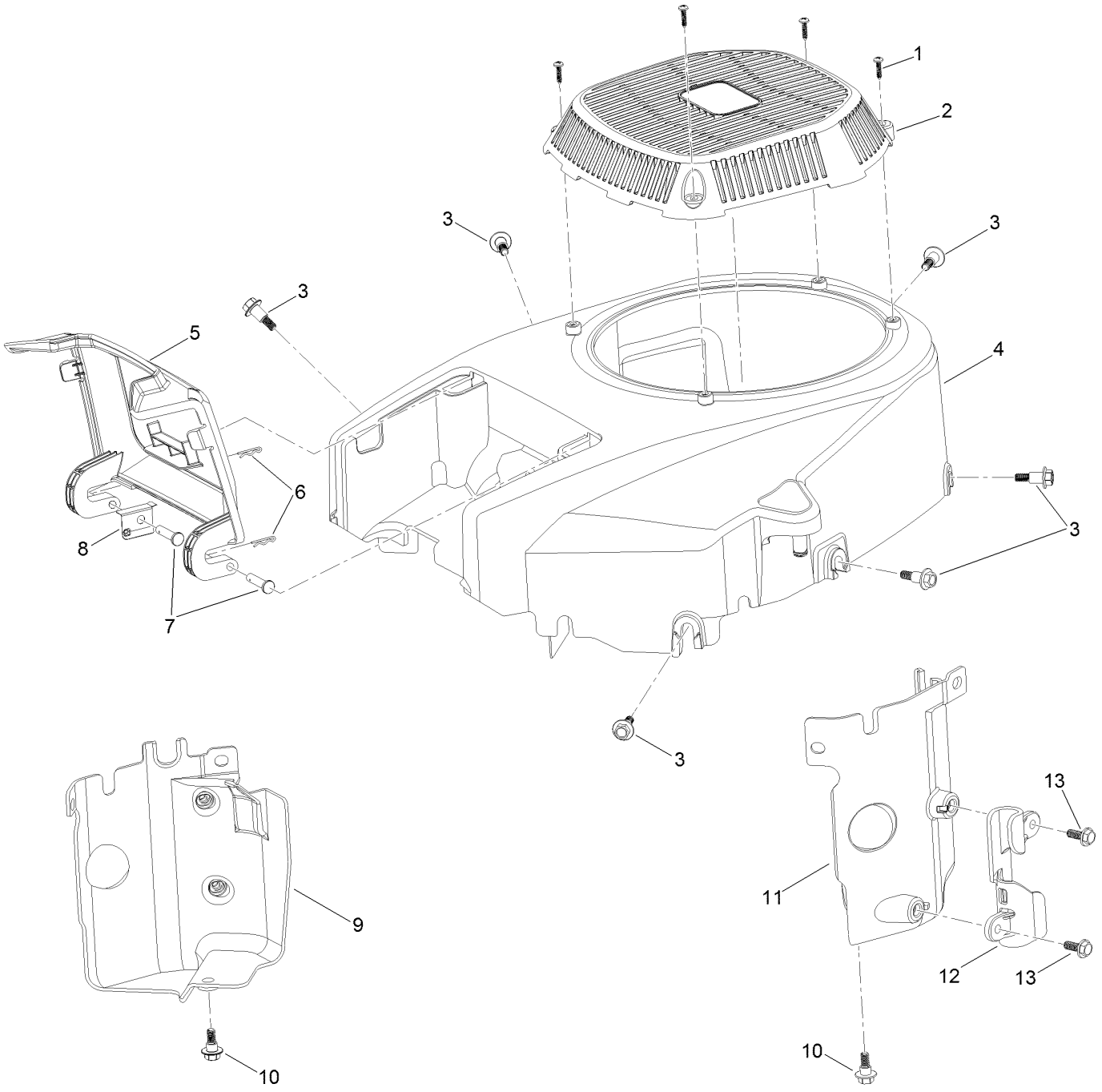

Blower Housing Assembly (continued)

Ref.	Part Number	Qty.	Description
1	133-1571	4	Screw-PPH, Plastic
2	127-9045	1	Cover-Fan
3	127-9196	6	Screw-Shoulder, HWH
4	133-1572	1	Shroud-Engine
5	127-9046	1	Door-Filter, Air
6	127-9280	2	Pin-Hair
7	127-9282	2	Pin
8	127-9281	1	Plate-Spring
9	127-9049	1	Baffle-Air, Left
10	120-4210	2	Screw-Shoulder, HHF
11	127-9048	1	Baffle-Air, Right
12	127-9287	1	Cleat-Hose
13	120-4232	2	Screw-HHF

Gasket and Seal Kit

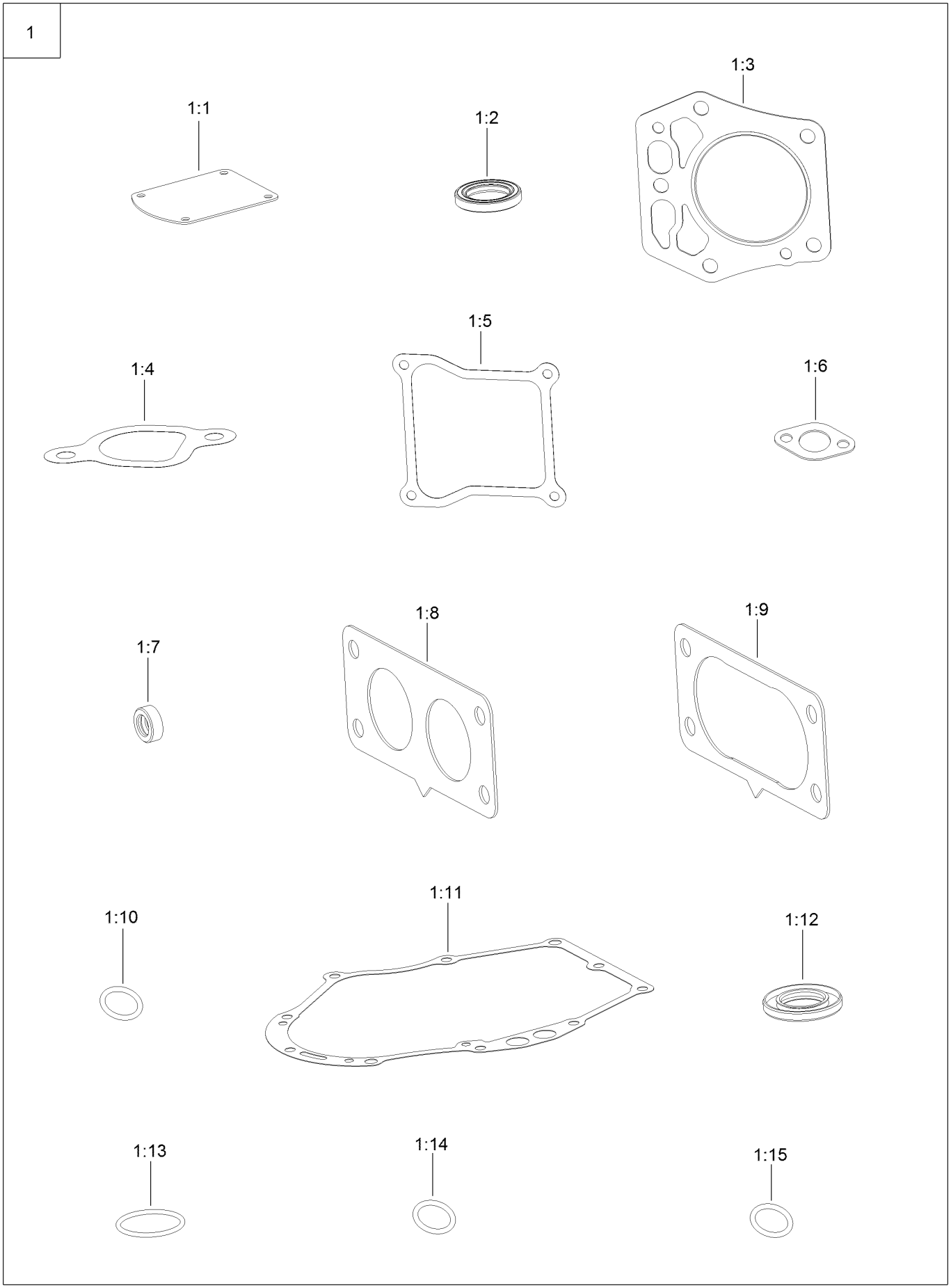

Gasket and Seal Kit (continued)

Ref.	Part Number	Qty.	Description
1	127-9296	1	Gasket And Seal Kit
1:1	127-9214	1	Gasket-Breather
1:2	120-4267	1	Seal-Oil
1:3	127-9226	2	Gasket-Head, Cylinder
1:4	127-9230	2	Gasket-Intake
1:5	127-9295	2	Gasket-Valve Cover
1:6	120-4317	2	Gasket-Exhaust
1:7	120-4257	1	Seal-Oil
1:8	127-9246	2	Gasket-Carburetor
1:9	127-9251	1	Gasket-Carburetor
1:10	120-4262	2	O-Ring
1:11	127-9267	1	Gasket-Cover, Crankcase
1:12	127-9271	1	Seal
1:13	127-9273	1	O-Ring
1:14	127-9284	1	O-Ring
1:15	127-9286	1	O-Ring

Body Styling and Fuel Tank Assembly

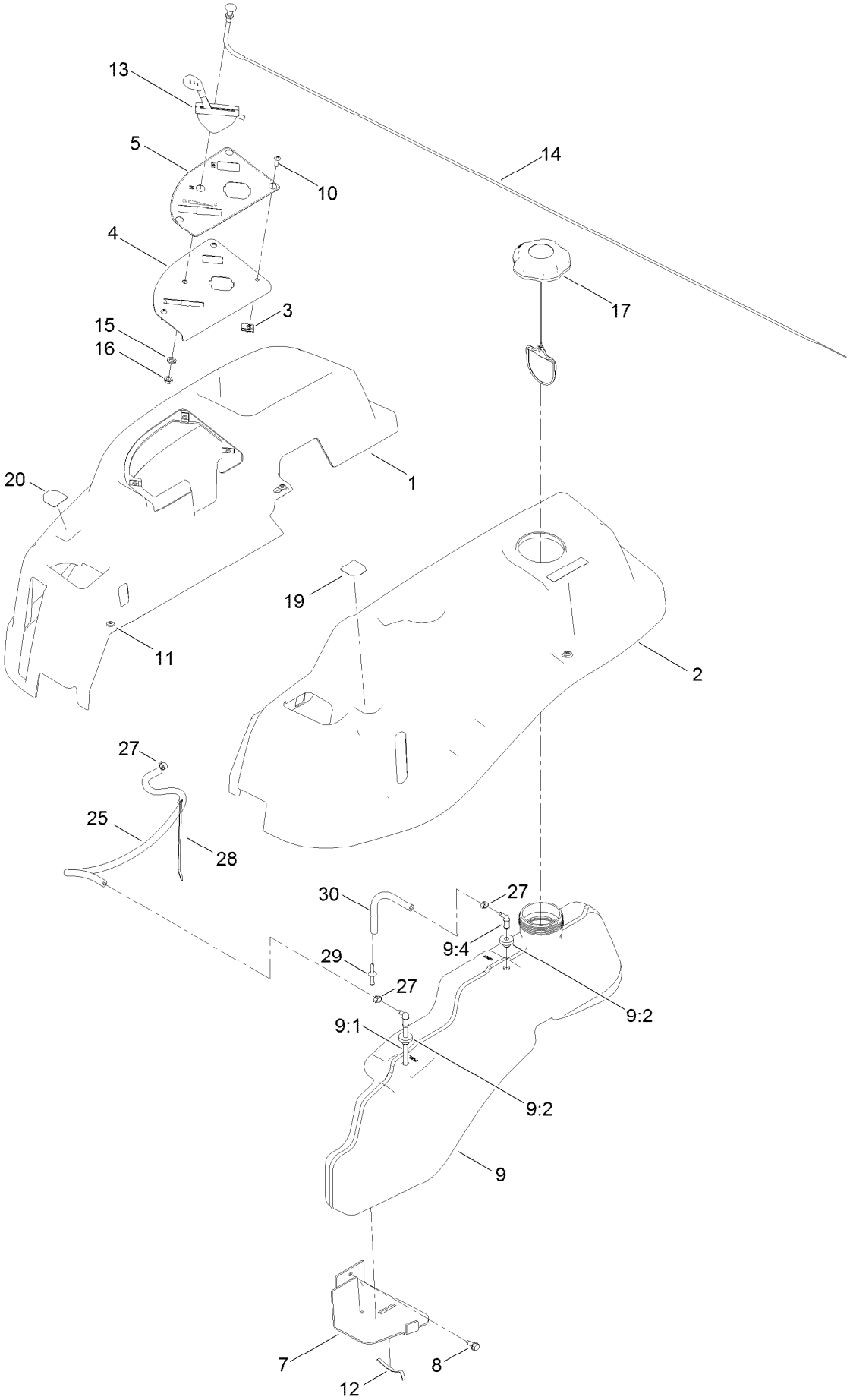

Body Styling and Fuel Tank Assembly (continued)

Ref.	Part Number	Qty.	Description
1	119-3338	1	Pod-RH
2	119-3337	1	Pod-LH
3	107069	3	Clip
4	119-3377-03	1	Plate-Control
5	121-0773	1	Decal-Panel, Control
7	119-3395-03	1	Support-Tank, Front
8	32144-70	2	Screw-HWHTF
9	119-3324	1	Fuel Tank ASM
9:1	121-0793	1	Connector-Elbow, 90 DEG
9:2	46-6560	2	Bushing
9:4	117-7400	1	Fitting-Plastic
10	3258-166	3	Screw-PRH
11	120-7950	6	Screw-Shoulder
12	609830	2	Spring
13	121-0769	1	Cable-Throttle
14	112-9753	1	Cable-Choke
15	3253-21	1	Washer-Lock
16	3220-3	1	Nut-HJ
17	137-4119	1	Cap-Fuel, Ratcheting
19	119-8814	1	Decal-Lever, Control (LH)
20	119-8815	1	Decal-Lever, Control (RH)
25	109-0281	1	Hose-Fuel
27	2412-98	3	Clamp-Hose
28	614249	1	Tie-Cable
29	117-5399	1	Adaptor-Orifice
30	110-1876	1	Hose-Fuel

Battery and Electrical Assembly

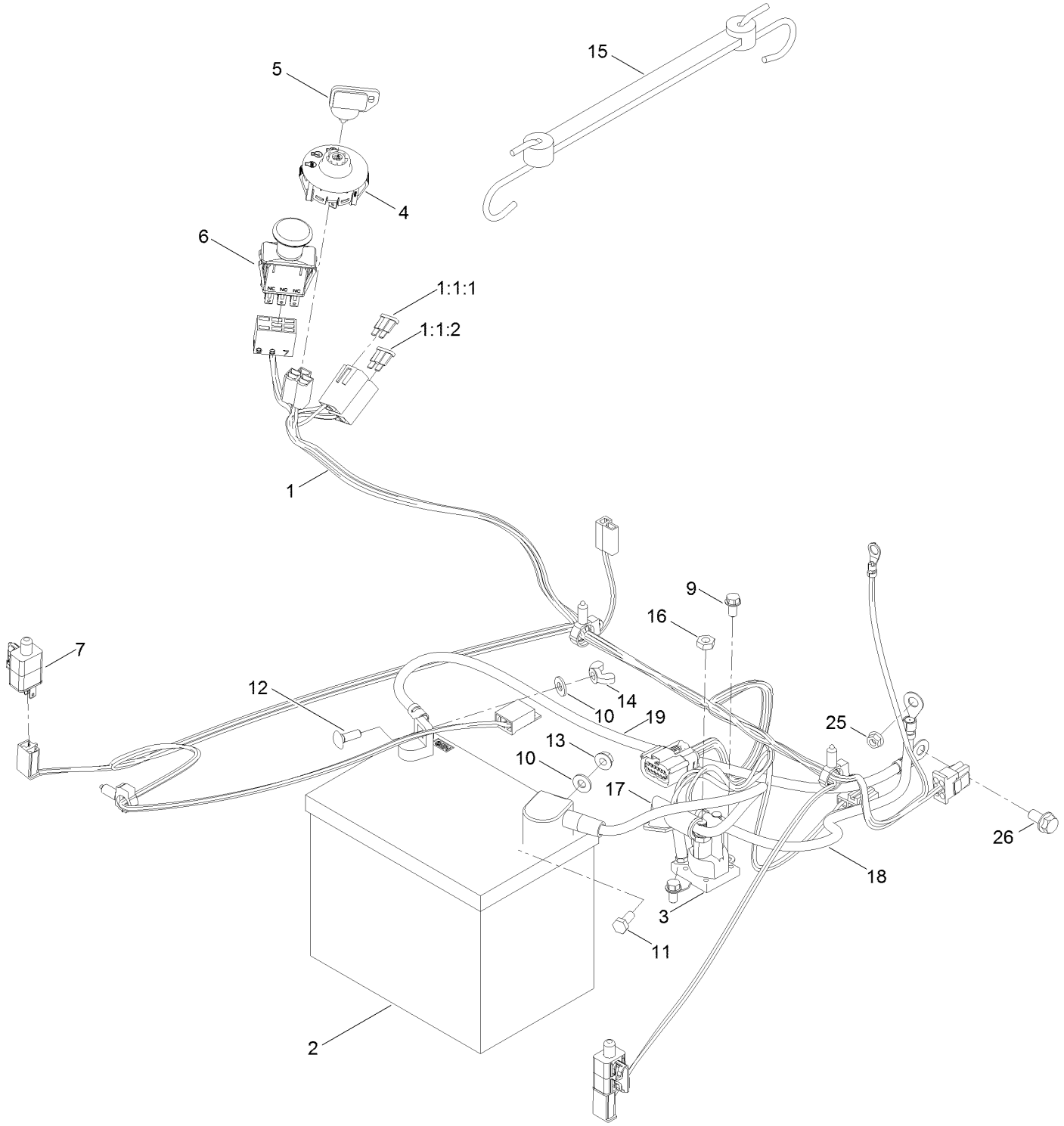

Battery and Electrical Assembly (continued)

Ref.	Part Number	Qty.	Description
1	136-7482	1	Harness-Wire
1:1:1	109103	1	Fuse-Blade, 30 Amp
1:1:2	109102	1	Fuse-Blade, 25 Amp
2	105-1692	1	Battery
3	117-1197	1	Solenoid
4	137-4100	1	Switch-Ignition
5	63-8360	1	Key-Ignition
6	103-5221	1	Switch-PTO
7	110-6765	2	Switch
9	32144-4	2	Screw-HWH
10	3256-22	2	Washer-Flat

Ref.	Part Number	Qty.	Description
11	321-3	1	Screw-HH
12	3229-1	1	Bolt-CARR
13	32128-33	1	Nut-HF
14	32103-22	1	Nut-Wing
15	104-2466	1	Holddown-Battery
16	3220-2	2	Nut-Jam
17	119-8897	1	Cable-Battery, Red
18	121-0711	1	Cable-Battery, Positive
19	119-8899	1	Cable-Battery, Black
25	33003-00	1	Nut-HF
26	3234-14	1	Screw-HHF

50 Inch Deck Assembly

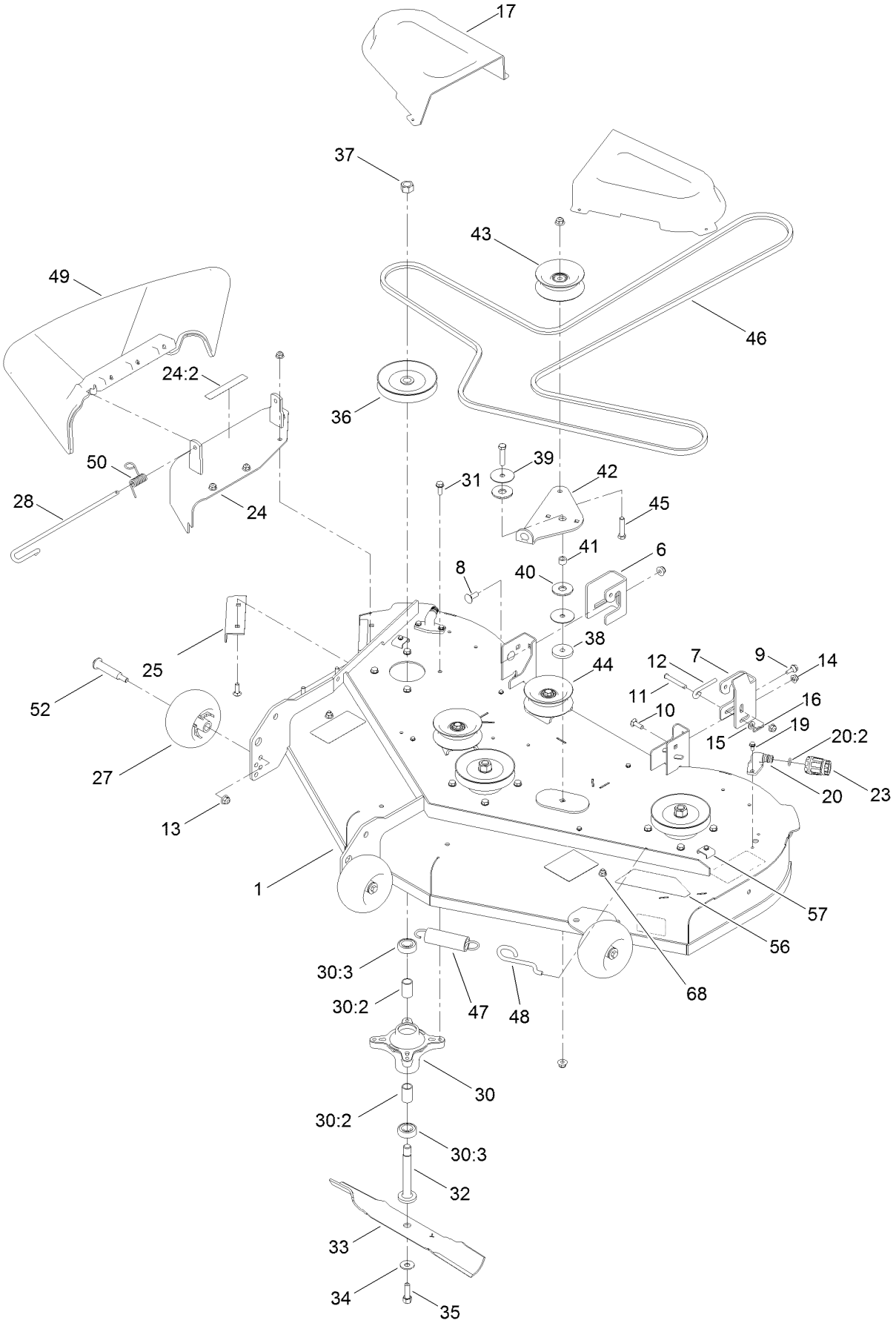

50 Inch Deck Assembly (continued)

Ref.	Part Number	Qty.	Description
1	131-3614	1	Deck And Decal ASM
6	131-4138	1	Bracket-Hanger, RH
7	131-1091	1	Bracket-Hanger, LH
8	3231-2	2	Bolt-CARR
9	120-7024	1	Screw-Shoulder, HHF
10	3230-22	5	Screw-CARR
11	110-0618	1	Pin-Clevis
12	131-0955	1	Rod-Level, Deck
13	104-8301	7	Nut-HF, NI
14	104-8300	8	Nut-HF, NI
15	3256-23	1	Washer-Plain
16	1-806003	1	Pin-Cotter
17	108-7890	2	Cover-Belt
19	32144-4	4	Screw-HWH
20	133-9289	2	Fitting-Washout
20:2	133-9290	1	O-Ring
23	95-3270	1	Connector-Hose
24	131-3962	1	Cover ASM W/Decal
24:2	93-7009	1	Decal-Danger
25	120-7951-03	1	Baffle-Cutoff
27	1-603299	3	Roller-Scalp, Anti
28	109-8854	1	Pin-Chute
30	121-0751	3	Spindle ASM
30:2	120-7935	2	Spacer
30:3	136-5441	2	Bearing-Ball

Ref.	Part Number	Qty.	Description
31	32144-41	12	Screw-Taptite
32	117-7268	3	Shaft-Spindle
33	115-5059-03	3	Blade-Hi Lift
34	3290-465	3	Washer-Belleville
35	26-0671	3	Screw-HH
36	125-5575	3	Pulley
37	3219-6	3	Nut-Hex
38	110-9981	1	Washer-Plain
39	120-2229	2	Washer
40	114-0463	2	Washer-Friction, Composite
41	115-4986	1	Spacer
42	114-8540	1	Arm-Idler
43	132-9420	3	Pulley-Idler, Flat
44	3256-24	2	Washer-Flat
45	323-9	4	Screw-HH
46	119-8820	1	V-Belt
47	1-603414	1	Spring-Extension
48	112-3973	1	Hook-Return, Spring
49	121-0739	1	Deflector-Discharge
50	121-2983	1	Spring-Torsion
52	112-3977	3	Bolt-Shoulder
56	121-0792	1	Decal-Deck
57	32144-1	6	Screw-Taptite
68	322-2	2	Screw-HH

50 Inch Deck and Decal Assembly No. 131-3614

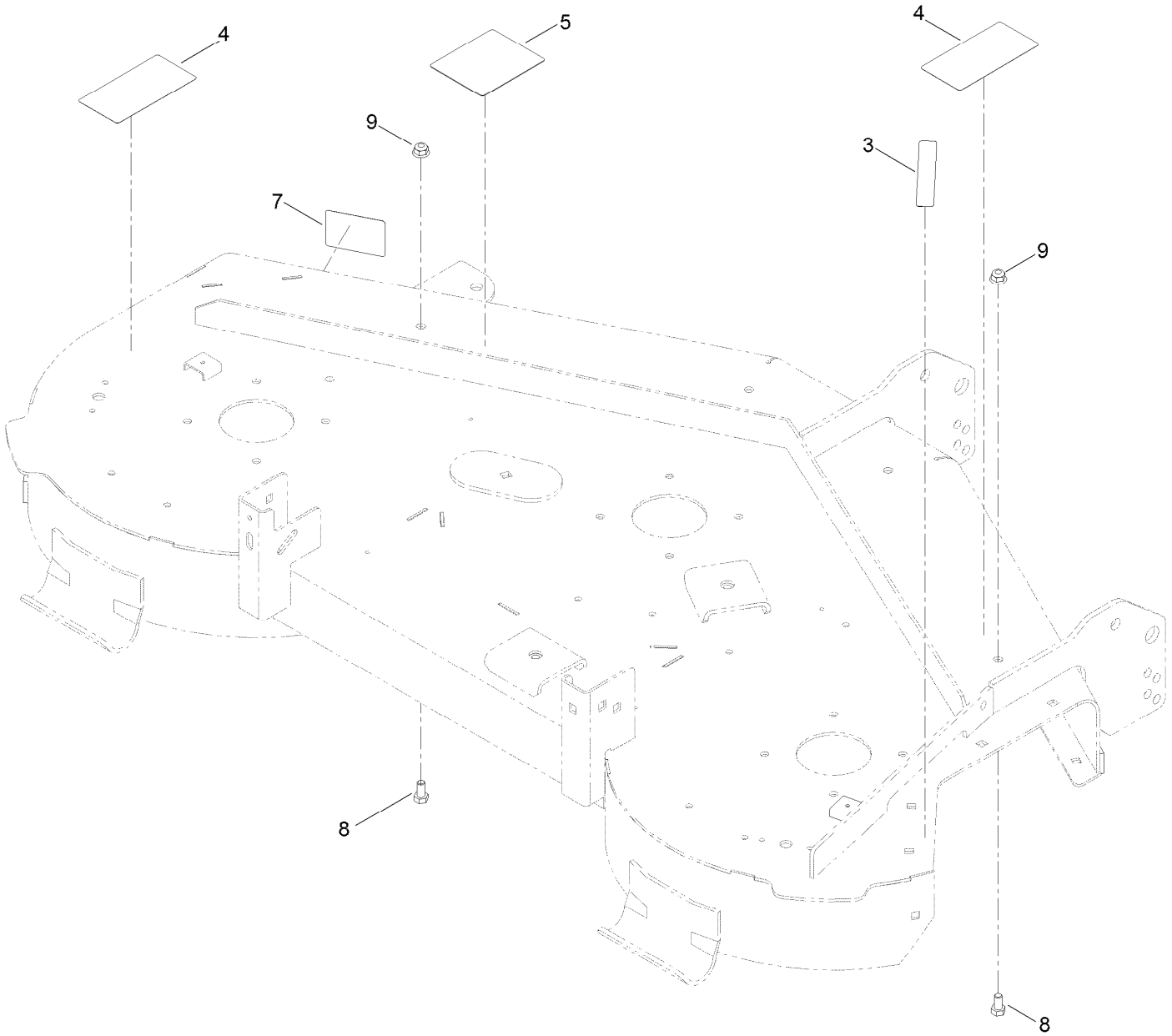

50 Inch Deck and Decal Assembly No. 131-3614 (continued)

Ref.	Part Number	Qty.	Description
3	93-7009	1	Decal-Danger
4	132-0872	2	Decal-Danger, Deck
5	99-3943	1	Decal-Routing, Belt
7	112-9840	1	Decal-Scalp, Anti
8	322-2	2	Screw-HH
9	104-8300	2	Nut-HF, NI

Model Specific Decal Assembly

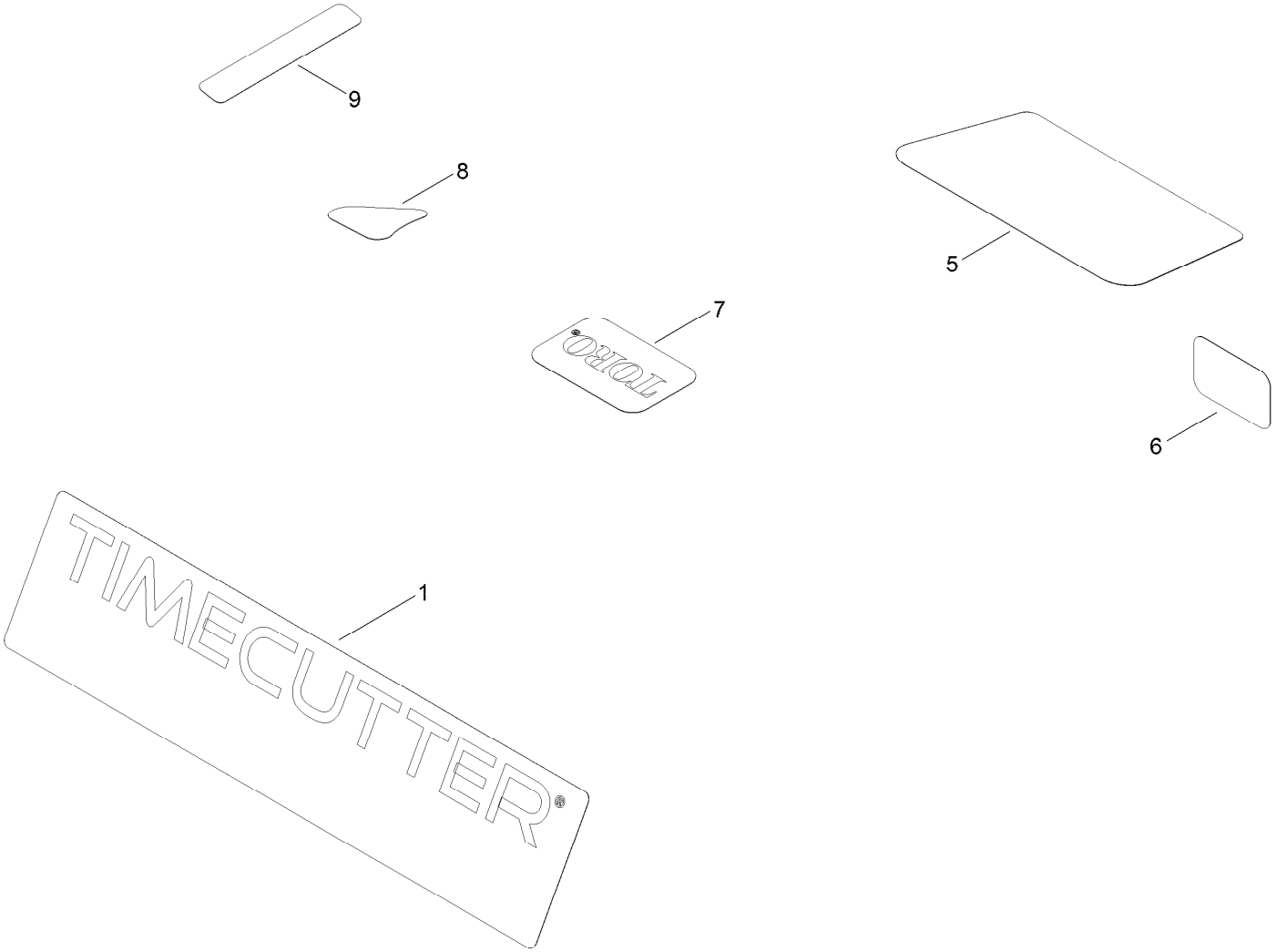

Model Specific Decal Assembly (continued)

Ref.	Part Number	Qty.	Description
1	136-5578	1	Decal-Timecutter
5	136-5597	1	Decal-Engine
6	127-9076	1	Placard-Intake
7	131-4157	1	Decal
8	131-1097	1	Decal-Drain, Oil
9	132-0904	1	Decal-Shutdown

Frame Decal Assembly

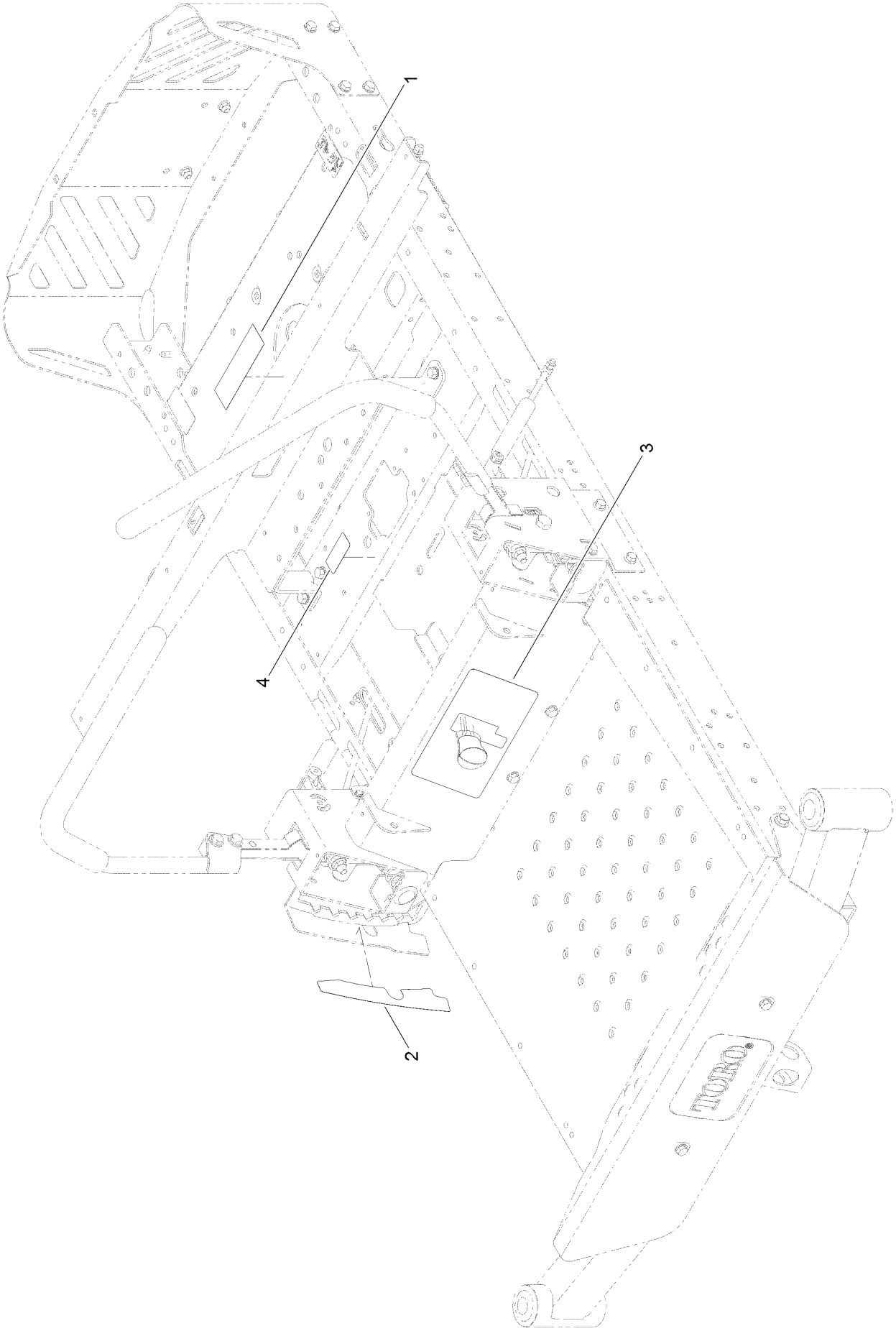

Frame Decal Assembly (continued)

Ref.	Part Number	Qty.	Description
1	106-8717	1	Decal-Service, CE
2	119-8870	1	Decal-HOC
3	131-3947	1	Decal-Control, Speed
4	121-5684	1	Decal-Location, Service Dealer

Clutch Assembly

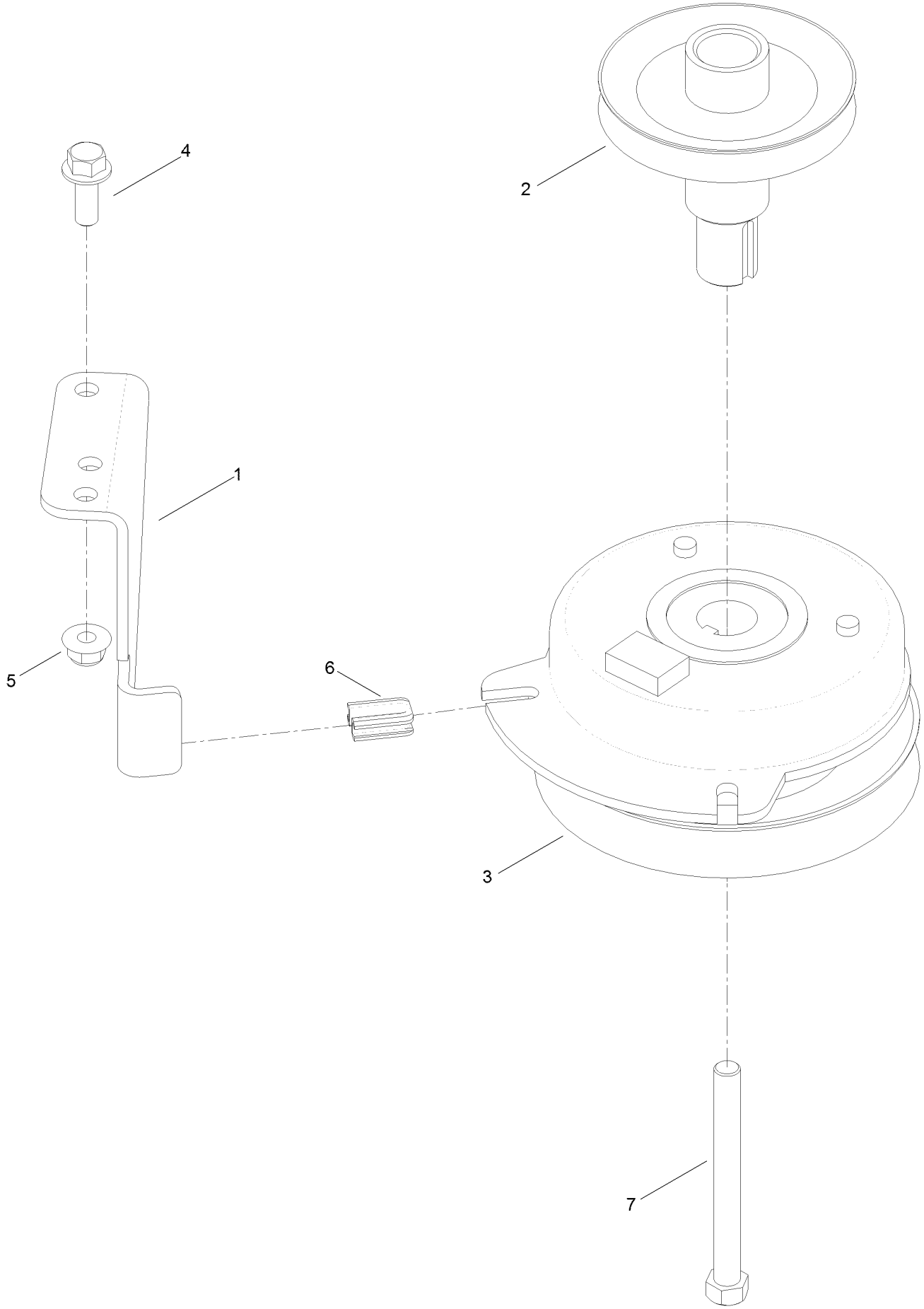

Clutch Assembly (continued)

Ref.	Part Number	Qty.	Description
1	119-8885	1	Stop-Clutch
2	130-6854	1	Pulley-Engine
3	127-3408	1	Clutch-PTO
4	3234-42	1	Screw-HHF
5	104-8301	1	Nut-HF, NI
6	120-2217	1	Isolator-Clutch
7	3212-17	1	Screw-HH

Attachments and Accessories

For 74775 TimeCutter MX 5000 Riding Mower

Product Name	Model/Part
Arm Rest Kit	110-5719
Hourmeter Kit	116-5461
All Season Synthetic Oil (10W30, QT)	117-0066
Fuel Stabilizer (4oz)	117-0089
Fuel Stabilizer (16oz)	117-0090
Seat Cover W/O Arm Rest - TC 18in	117-0096
Bagging Enhancement Kit	121-5692
Striping Kit	121-5706
Jack Mount Kit	126-5251
Jack Kit	127-6666
Attachment Mount Kit	131-3966
Weight Kit	131-7658
Deluxe Seat Kit	131-7699
Toro V-Twin Engine Maintenance Kit	132-4878
Floor Mat Kit	132-6921
Maintenance Kit Toro V-twin Hd Engine	136-7847
Pro-Control Damper Kit	138-7588
10w30 4-cycle Engine Oil (32oz Bottle)	38280
Toro 4-cycle SAE 30 Oil (32oz Bottle)	38903
Storage Cover	490-7516
Foot Assist Deck Lift Kit, 2011 and After Zero-Turn-Radius Riding Mower	79010
Sunshade Kit	79011
Blade Kit	79016P
50in Recycler Kit	79024
Cargo Carrier	79040
Assist Handle and Step Kit	79339
50in Bagger	79395

Notes:

TORO®

Count on it.