Form No. 3417-391 Rev C

TORO®

Count on it.

Parts Catalog

# TimeCutter® SS 5000

## Riding Mower

**Model No. 74731—Serial No. 401400000 and Up**

Register at www.Toro.com.
Original Instructions (EN)

*3417-391* C

# Ordering Replacement Parts

To order replacement parts, please supply the part number, the quantity, and the description of each part desired.

### Understanding Reference Numbers

Each identified part in an illustration has a reference number. The reference number for a part also appears in the parts list, along with other information about the part.

This catalog uses two special reference number formats, one to indicate parts in a service assembly and another to indicate the quantity of a given part in an illustration.

### Service Assembly Reference Numbers

Parts in service assemblies have reference numbers in the form a:b. The a represents the reference number of the entire service assembly and the b represents a sequential number unique to each part within the service assembly.

For example, a wheel assembly might be identified by reference number 6, the tire by 6:1, the valve by 6:2, and the wheel by 6:3. When you order the assembly identified by reference number 6, you receive all parts identified by reference numbers 6:1,6:2, and 6:3. However, you may also order any part individually. Reference numbers of this type appear in illustration and in parts lists.

### Reference Numbers Indicating Quantity

In an illustration, if a reference number indicates more than one part, the reference number has the form nX y. The n represents the quantity of the part, the X is the multiplication symbol, and the y represents the reference number.

For example, in an illustration, the reference number 2X 37 means that two of the parts identified by reference number 37 are indicated.

# Contents

Frame Assembly . . . . . 4
Deck Lift Assembly . . . . . 6
Caster, Wheel and Tire Assembly . . . . . 8
Traction Drive Assembly . . . . . 10
Left Hand Hydro Transaxle Assembly No. 119-3350 . . . . . 12
Right Hand Hydro Transaxle Assembly No. 119-3351 . . . . . 14
Brake Assembly . . . . . 16
Rear Tire Assembly . . . . . 18
Seat Pan Assembly . . . . . 20
Motion Control Assembly . . . . . 22
Engine Assembly . . . . . 24
Fuel System Assembly . . . . . 26
Carburetor Assembly . . . . . 28
Air Intake and Filtration Assembly . . . . . 30
Ignition and Electrical Assembly . . . . . 32
Crankcase and Crankshaft Assembly . . . . . 34
Governor Control Assembly . . . . . 36
Piston and Cylinder Head Assembly . . . . . 38
Blower Housing Assembly . . . . . 40
Gasket and Seal Kit . . . . . 42
Body Styling and Fuel Tank Assembly . . . . . 44
Battery and Electrical Assembly . . . . . 46
50 Inch Deck, Belt and Blade Assembly . . . . . 48
50 Inch Deck Decal Assembly No. 131-3606 . . . . . 50
Model Specific Decal Assembly . . . . . 52
Frame Decal Assembly . . . . . 54
Clutch Assembly . . . . . 56
Attachments and Accessories . . . . . 58

**© 2018—The Toro® Company**
**8111 Lyndale Avenue South**
**Bloomington, MN 55420**



**Contact us at www.Toro.com.**
**Printed in the USA.**
**All Rights Reserved**

# Frame Assembly

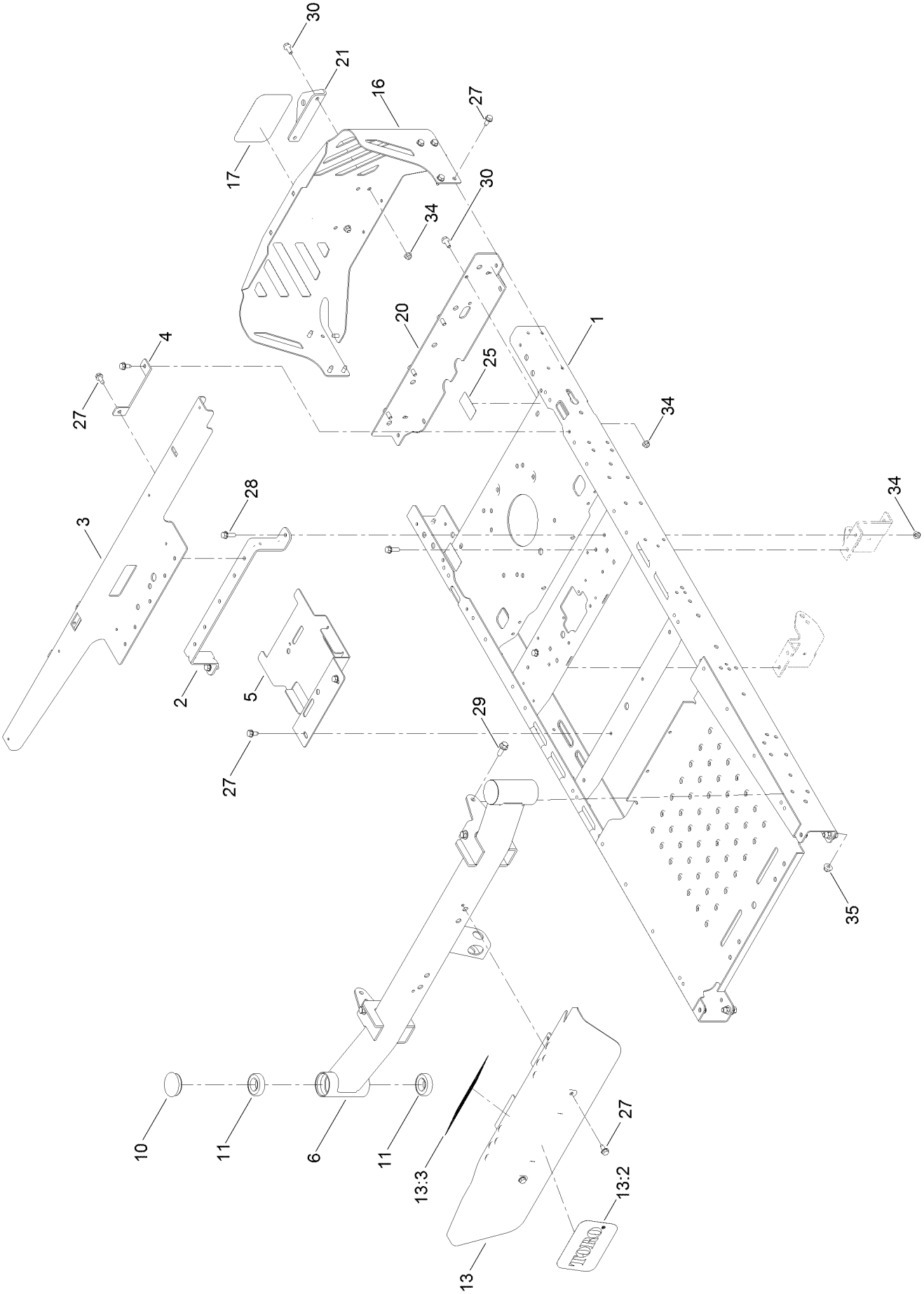

# Frame Assembly (continued)

| Ref. | Part Number | Qty. | Description |
|---|---|---|---|
| 1 | 135-0508-01 | 1 | Riveted Frame ASM (Wide Lever) |
| 2 | 135-0687-03 | 1 | Brace-Seat, Rear (Wide) |
| 3 | 131-1039-03 | 1 | Support-Pod, Wide |
| 4 | 119-3431-03 | 2 | Support-Tank, Rear |
| 5 | 135-0507-03 | 1 | Bracket-Battery |
| 6 | 137-7029-01 | 1 | Axle-Wide |
| 10 | 116-4348 | 2 | Cap-Grease |
| 11 | 109-3678 | 4 | Bearing-Ball |
| 13 | 132-0892 | 1 | Footrest ASM |
| 13:2 | 99-4693 | 1 | Decal |
| 13:3 | 132-0869 | 1 | Decal-Danger |

| Ref. | Part Number | Qty. | Description |
|---|---|---|---|
| 16 | 130-0701-03 | 1 | Guard-Engine, Wide |
| 17 | 99-4693 | 1 | Decal |
| 20 | 130-6946-01 | 1 | Crossmember-Rear, Wide |
| 21 | 117-1232-03 | 1 | Bracket-Hitch |
| 25 | 121-2989 | 2 | Decal-Bypass |
| 27 | 32144-70 | 18 | Screw-HWHTF |
| 28 | 3234-29 | 4 | Screw-HHF |
| 29 | 3234-42 | 6 | Screw-HHF |
| 30 | 3234-47 | 8 | Screw-HHF |
| 34 | 104-8300 | 12 | Nut-HF, NI |
| 35 | 104-8301 | 6 | Nut-HF, NI |

# Deck Lift Assembly

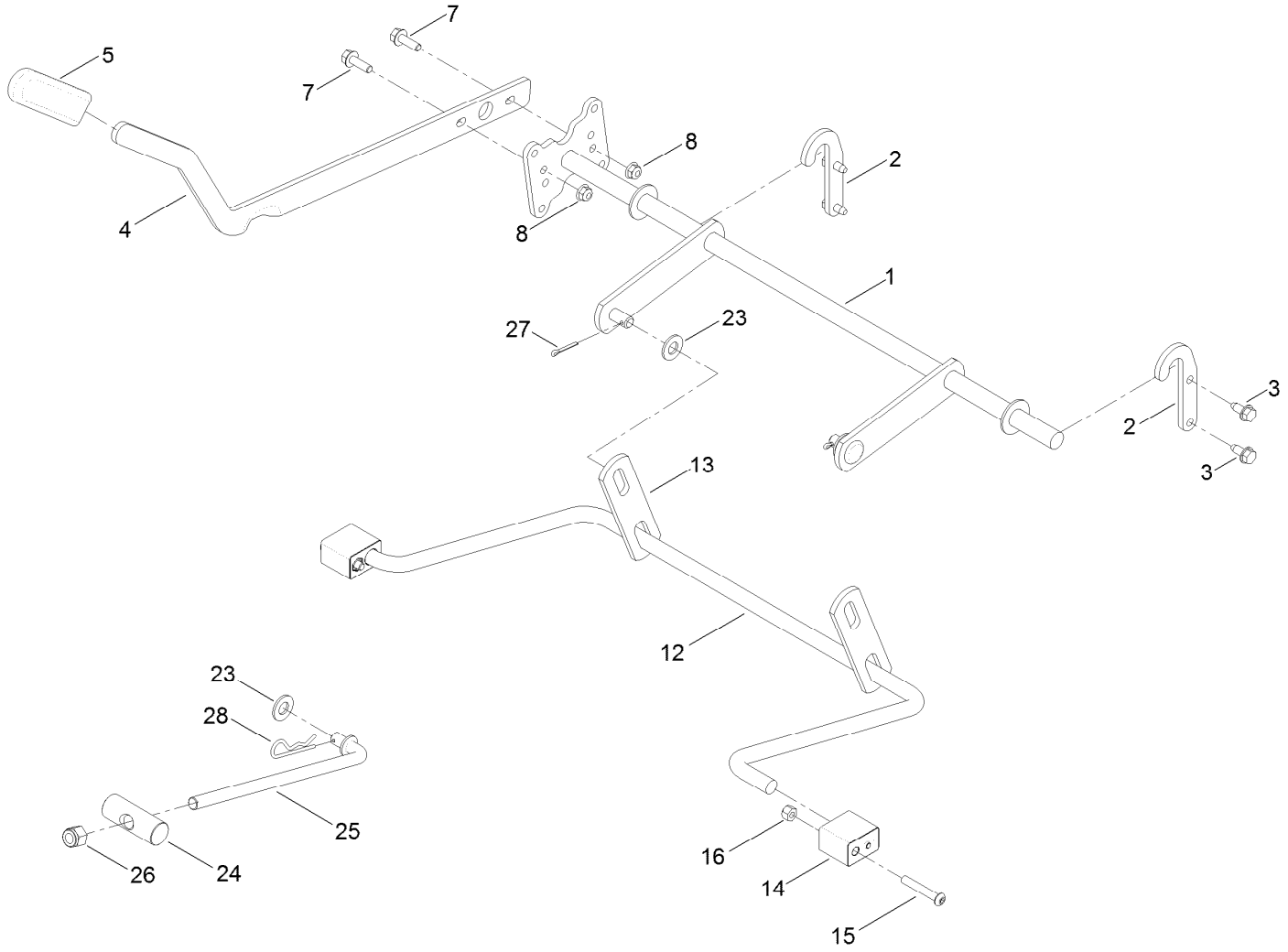

# Deck Lift Assembly (continued)

| Ref. | Part Number | Qty. | Description |
|---|---|---|---|
| 1 | 132-6878-03 | 1 | Lift-Deck, Wide |
| 2 | 119-8875 | 2 | Bracket-Lift |
| 3 | 32144-70 | 4 | Screw-HWHTF |
| 4 | 119-3427-03 | 1 | Lever-Lift |
| 5 | 1-633268 | 1 | Grip-Lever |
| 7 | 3234-29 | 2 | Screw-HHF |
| 8 | 104-8300 | 2 | Nut-HF, NI |
| 12 | 119-3347 | 1 | Arm-Lift, Rear (Wide) |
| 13 | 108-7840 | 2 | Link-Lift |
| 14 | 108-7845 | 2 | Block-Pivot |
| 15 | 120-5499 | 2 | Screw-HSBH |
| 16 | 3296-29 | 2 | Nut-Lock, NI |
| 23 | 3256-26 | 3 | Washer-Flat |
| 24 | 119-8810 | 1 | Pin-Pivot |
| 25 | 133-4319 | 1 | Rod-Mount, Deck |
| 26 | 3296-19 | 1 | Nut-Hex |
| 27 | 3272-11 | 2 | Pin-Cotter |
| 28 | 1-806005 | 1 | Pin-Cotter |

# Caster, Wheel and Tire Assembly

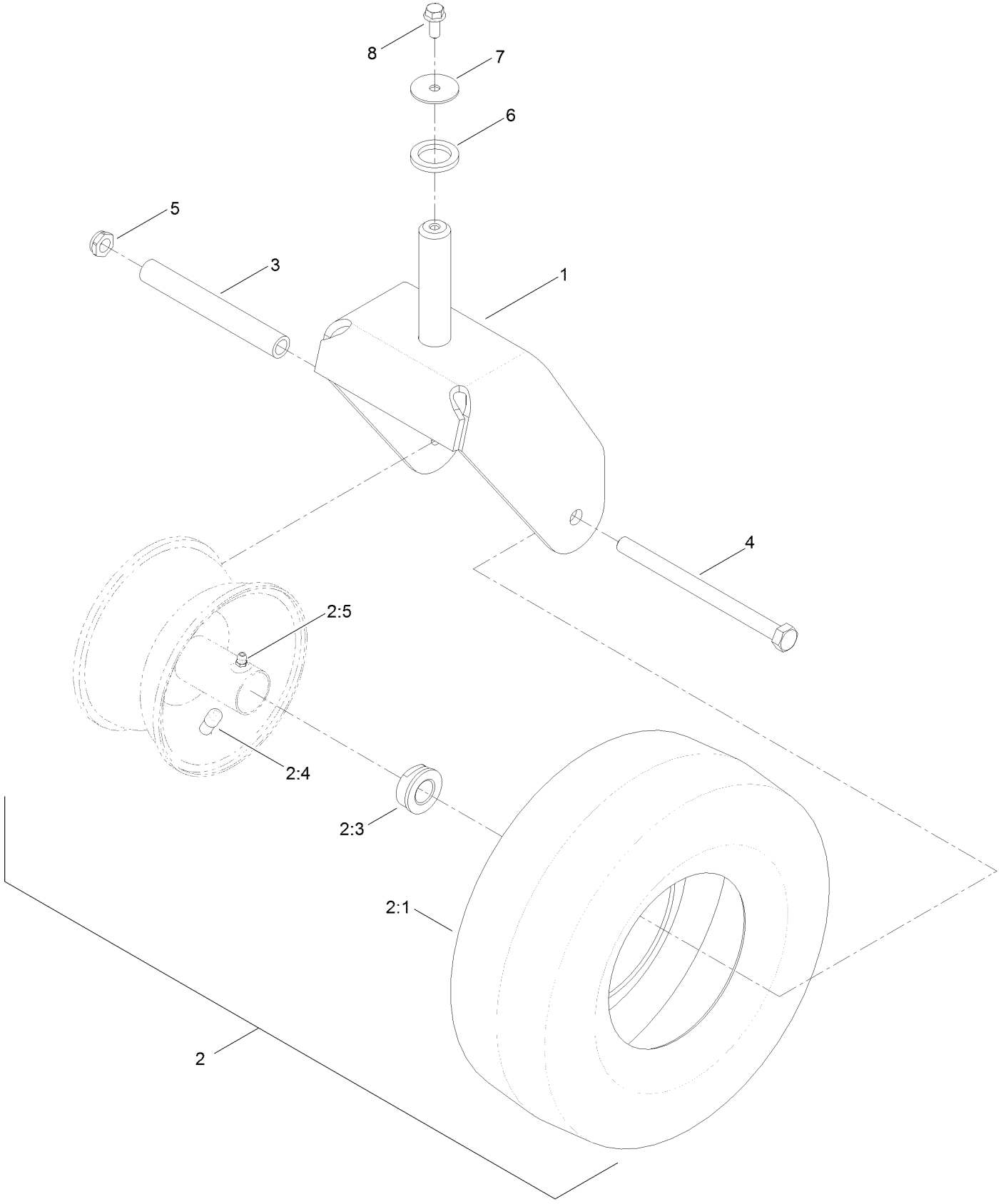

# Caster, Wheel and Tire Assembly (continued)

| Ref. | Part Number | Qty. | Description |
|---|---|---|---|
| 1 | 119-3349-01 | 2 | Fork-Caster |
| 2 | 119-3473 | 2 | 13 Inch Wheel And Tire ASM |
| 2:1 | 119-3471 | 1 | Tire-13 Inch |
| 2:3 | 114-1640 | 2 | Bushing-Flange |
| 2:4 | 232-27 | 1 | Stem-Valve |
| 2:5 | 302-5 | 1 | Fitting-Grease |

| Ref. | Part Number | Qty. | Description |
|---|---|---|---|
| 2:99 | 232-46 | 1 | Tube-Inner ● |
| 3 | 119-3475 | 2 | Spanner |
| 4 | 325-37 | 2 | Screw-HH |
| 5 | 3296-45 | 2 | Nut-Hex |
| 6 | 117-7394 | 2 | Washer-Thrust |
| 7 | 3256-68 | 2 | Washer-Flat |
| 8 | 3234-47 | 2 | Screw-HHF |

● Not illustrated

# Traction Drive Assembly

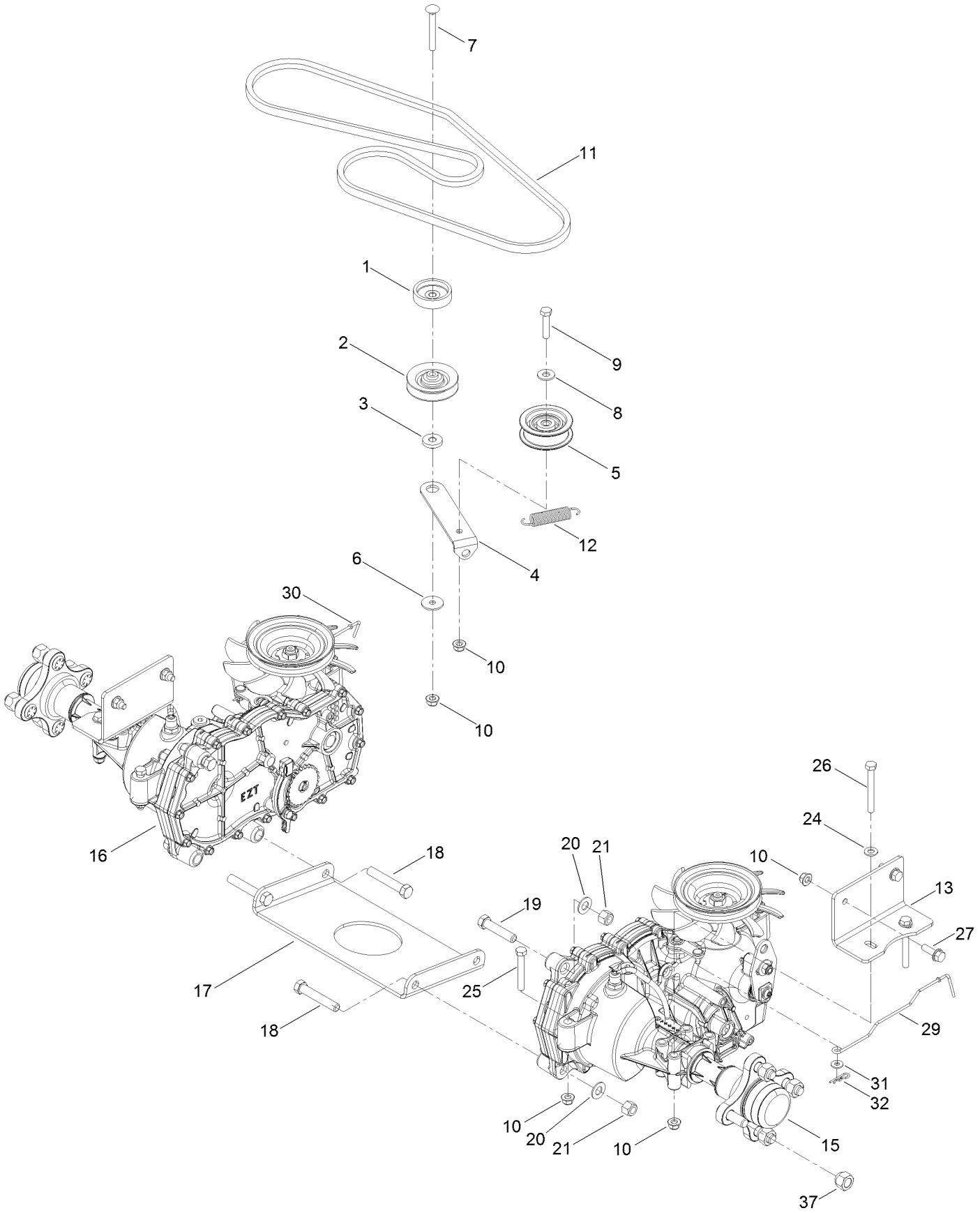

# Traction Drive Assembly (continued)

| Ref. | Part Number | Qty. | Description |
|---|---|---|---|
| 1 | 119-3353 | 1 | Spacer |
| 2 | 119-8822 | 1 | Pulley-Idler |
| 3 | 119-3327 | 1 | Spacer-Arm, Idler |
| 4 | 119-3326 | 1 | Arm-Idler |
| 5 | 106-2176 | 1 | Pulley-Idler |
| 6 | 5-4460 | 1 | Washer-Pivot |
| 7 | 3230-8 | 1 | Screw-CARR |
| 8 | 3256-3 | 1 | Washer-Flat |
| 9 | 322-7 | 1 | Screw-HH |
| 10 | 104-8300 | 14 | Nut-HF, NI |
| 11 | 130-6976 | 1 | V-Belt |
| 12 | 104-6415 | 1 | Spring-Return, Pedal |
| 13 | 117-7264-03 | 2 | Mount-Hydro |
| 15 | 119-3350 | 1 | LH Hydro Transaxle ASM |
| 16 | 119-3351 | 1 | RH Hydro Transaxle ASM |
| 17 | 119-3342-03 | 1 | Plate-Cross, Hydro |
| 18 | 324-10 | 4 | Screw-HH |
| 19 | 324-8 | 2 | Screw-HH |
| 20 | 3256-25 | 6 | Washer-Flat |
| 21 | 3296-48 | 6 | Nut-Lock, NI |
| 24 | 3256-23 | 6 | Washer-Plain |
| 25 | 322-11 | 4 | Screw-HH |
| 26 | 322-13 | 4 | Screw-HH |
| 27 | 3234-29 | 4 | Screw-HHF |
| 29 | 131-0900 | 1 | Rod-Bypass, LH |
| 30 | 130-7049 | 1 | Rod-Bypass, RH |
| 31 | 119-8952 | 2 | Washer |
| 32 | 3290-307 | 2 | Pin-Cotter |
| 37 | 242-50 | 8 | Nut-Lug |

# Left Hand Hydro Transaxle Assembly No. 119-3350

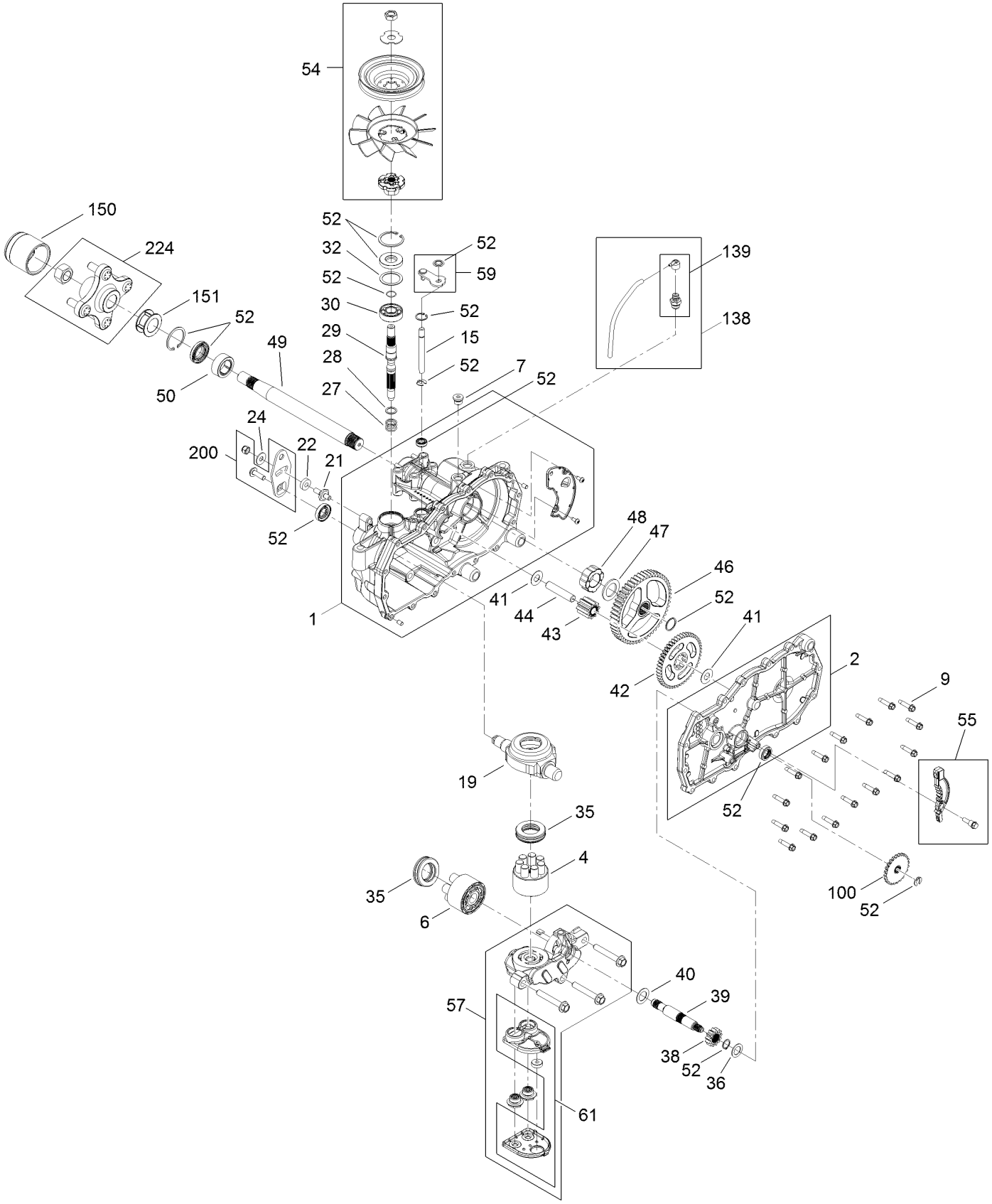

# Left Hand Hydro Transaxle Assembly No. 119-3350 (continued)

| Ref. | Part Number | Qty. | Description |
|---|---|---|---|
| 1 | 106-8695 | 1 | Main Housing ASM |
| 2 | 106-8696 | 1 | Side ASM |
| 4 | 110-8561 | 1 | Pump Block ASM |
| 6 | 103-2666 | 1 | Cylinder Block Kit |
| 7 | 104-2189 | 1 | Plug-Thread, Straight |
| 9 | 104-5305 | 16 | Screw-HHF |
| 15 | 106-8678 | 1 | Rod-Bypass |
| 19 | 104-5304 | 1 | Swashplate-Trunnion |
| 21 | 104-2116 | 1 | Stud |
| 22 | 112-9853 | 1 | Puck-Friction |
| 24 | 114-8491 | 1 | Washer |
| 27 | 120-5537 | 1 | Spring-Compression |
| 28 | 120-5538 | 1 | Washer |
| 29 | 104-5306 | 1 | Shaft-Input |
| 30 | 104-5311 | 1 | Bearing-Ball |
| 32 | 104-5308 | 1 | Spacer |
| 35 | 94-6922 | 2 | Bearing-Thrust |
| 36 | 104-5339 | 1 | Washer-Flat |
| 38 | 104-5316 | 1 | Gear-Pinnion, 13T |
| 39 | 106-8683 | 1 | Shaft-Motor |
| 40 | 104-5360 | 1 | Washer |
| 41 | 119-5541 | 2 | Washer |
| 42 | 104-5317 | 1 | Gear-10T/48T |
| 43 | 104-5318 | 1 | Gear-Jackshaft, 10T |
| 44 | 104-5329 | 1 | Pin-Jackshaft |
| 46 | 112-9855 | 1 | Gear-52T, Bull |
| 47 | 112-9856 | 1 | Washer |
| 48 | 112-9857 | 1 | Bearing-Sleeve |
| 49 | 120-7104 | 1 | Shaft-Axle |
| 50 | 112-9859 | 1 | Bushing-Axle |
| 52 | 106-8686 | 1 | Seal Kit ● |
| 54 | 121-5746 | 1 | Fan Pulley Kit |
| 55 | 106-8688 | 1 | Brake Arm Kit |
| 57 | 112-9861 | 1 | Center Section Filter Kit |
| 58 | 104-2147 | 1 | Sealant ● |
| 59 | 120-5549 | 1 | Bypass Kit |
| 61 | 114-1634 | 1 | Filter Kit |
| 100 | 106-8694 | 1 | Disc-Brake, Cog |
| 138 | 112-9866 | 1 | Breather Kit |
| 139 | 114-1635 | 1 | Breather ASM |
| 150 | 115-5057 | 1 | Cover-Nut, Axle |
| 151 | 120-7109 | 1 | Tube-Axle |
| 200 | 117-5362 | 1 | Control Arm Kit |
| 224 | 109-5939 | 1 | Hub Kit |

● Not illustrated

# Right Hand Hydro Transaxle Assembly No. 119-3351

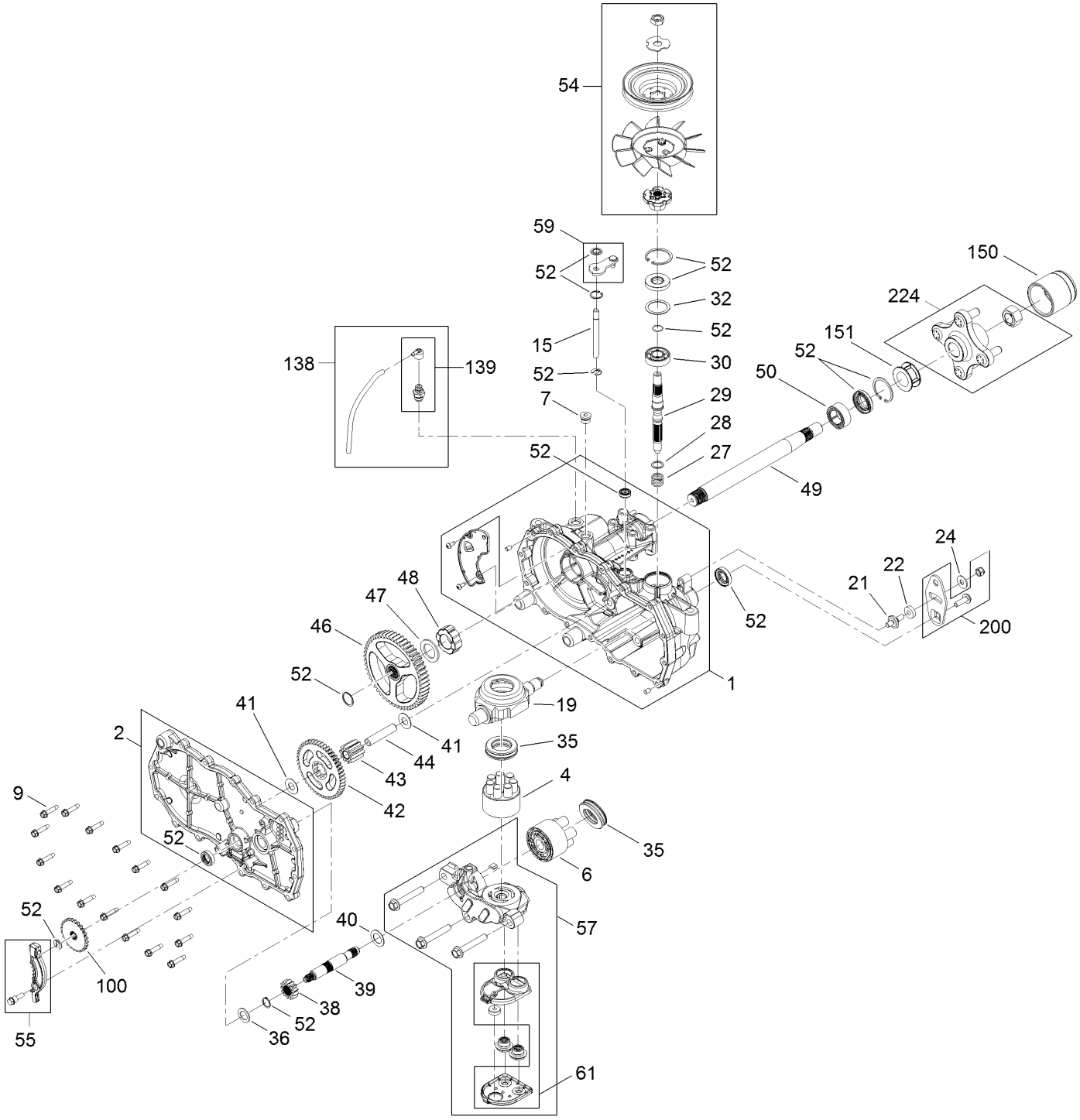

# Right Hand Hydro Transaxle Assembly No. 119-3351 (continued)

| Ref. | Part Number | Qty. | Description |
|---|---|---|---|
| 1 | 106-8674 | 1 | Main Housing ASM |
| 2 | 106-8675 | 1 | Side ASM |
| 4 | 110-8561 | 1 | Pump Block ASM |
| 6 | 103-2666 | 1 | Cylinder Block Kit |
| 7 | 104-2189 | 1 | Plug-Thread, Straight |
| 9 | 104-5305 | 16 | Screw-HHF |
| 15 | 106-8678 | 1 | Rod-Bypass |
| 19 | 104-5304 | 1 | Swashplate-Trunnion |
| 21 | 104-2116 | 1 | Stud |
| 22 | 112-9853 | 1 | Puck-Friction |
| 24 | 114-8491 | 1 | Washer |
| 27 | 120-5537 | 1 | Spring-Compression |
| 28 | 120-5538 | 1 | Washer |
| 29 | 104-5306 | 1 | Shaft-Input |
| 30 | 104-5311 | 1 | Bearing-Ball |
| 32 | 104-5308 | 1 | Spacer |
| 35 | 94-6922 | 2 | Bearing-Thrust |
| 36 | 104-5339 | 1 | Washer-Flat |
| 38 | 104-5316 | 1 | Gear-Pinnion, 13T |
| 39 | 106-8683 | 1 | Shaft-Motor |
| 40 | 104-5360 | 1 | Washer |
| 41 | 119-5541 | 2 | Washer |
| 42 | 104-5317 | 1 | Gear-10T/48T |
| 43 | 104-5318 | 1 | Gear-Jackshaft, 10T |
| 44 | 104-5329 | 1 | Pin-Jackshaft |
| 46 | 112-9855 | 1 | Gear-52T, Bull |
| 47 | 112-9856 | 1 | Washer |
| 48 | 112-9857 | 1 | Bearing-Sleeve |
| 49 | 120-7104 | 1 | Shaft-Axle |
| 50 | 112-9859 | 1 | Bushing-Axle |
| 52 | 106-8686 | 1 | Seal Kit ● |
| 54 | 121-5746 | 1 | Fan Pulley Kit |
| 55 | 106-8688 | 1 | Brake Arm Kit |
| 57 | 112-9862 | 1 | Center Section Filter Kit |
| 58 | 104-2147 | 1 | Sealant ● |
| 59 | 107-2489 | 1 | Bypass Arm Kit |
| 61 | 114-1634 | 1 | Filter Kit |
| 100 | 106-8694 | 1 | Disc-Brake, Cog |
| 138 | 112-9866 | 1 | Breather Kit |
| 139 | 114-1635 | 1 | Breather ASM |
| 150 | 115-5057 | 1 | Cover-Nut, Axle |
| 151 | 120-7109 | 1 | Tube-Axle |
| 200 | 117-5362 | 1 | Control Arm Kit |
| 224 | 109-5939 | 1 | Hub Kit |

● Not illustrated

# Brake Assembly

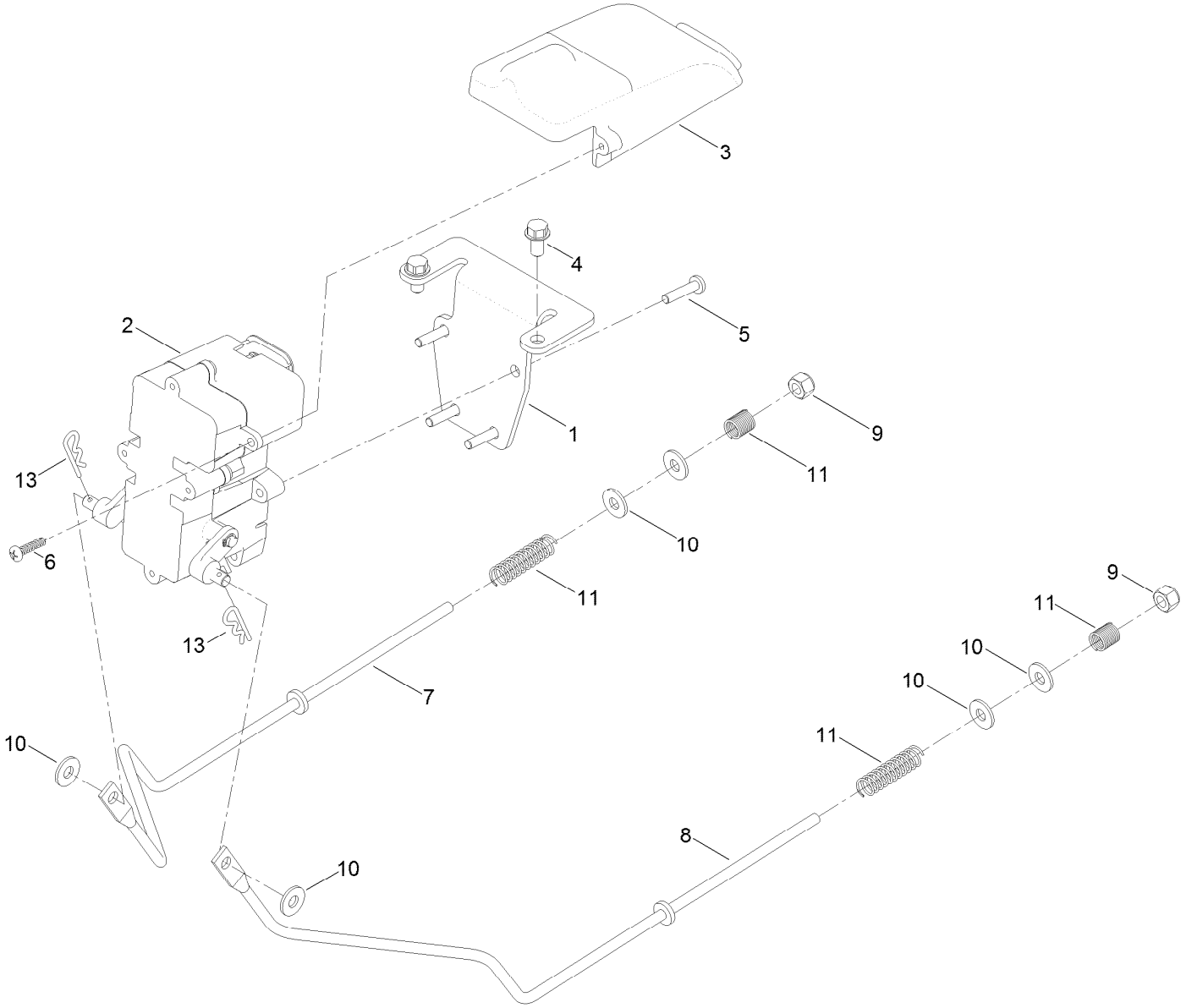

# Brake Assembly (continued)

| Ref. | Part Number | Qty. | Description |
|---|---|---|---|
| 1 | 130-0790-03 | 1 | Bracket-Mount, Brake |
| 2 | 136-4213 | 1 | Brake Box ASM |
| 3 | 132-6949 | 1 | Cover-Connector |
| 4 | 32144-4 | 2 | Screw-HWH |
| 5 | 32144-36 | 4 | Screw-PPH |
| 6 | 94-4496 | 2 | Screw-PPH |
| 7 | 121-2976 | 1 | Rod-Brake, Wide (RH) |
| 8 | 121-2977 | 1 | Rod-Brake, Wide (LH) |
| 9 | 3296-42 | 2 | Nut-Lock, NI |
| 10 | 119-8952 | 6 | Washer |
| 11 | 117-1169 | 4 | Spring-Compression |
| 13 | 3290-307 | 2 | Pin-Cotter |

# Rear Tire Assembly

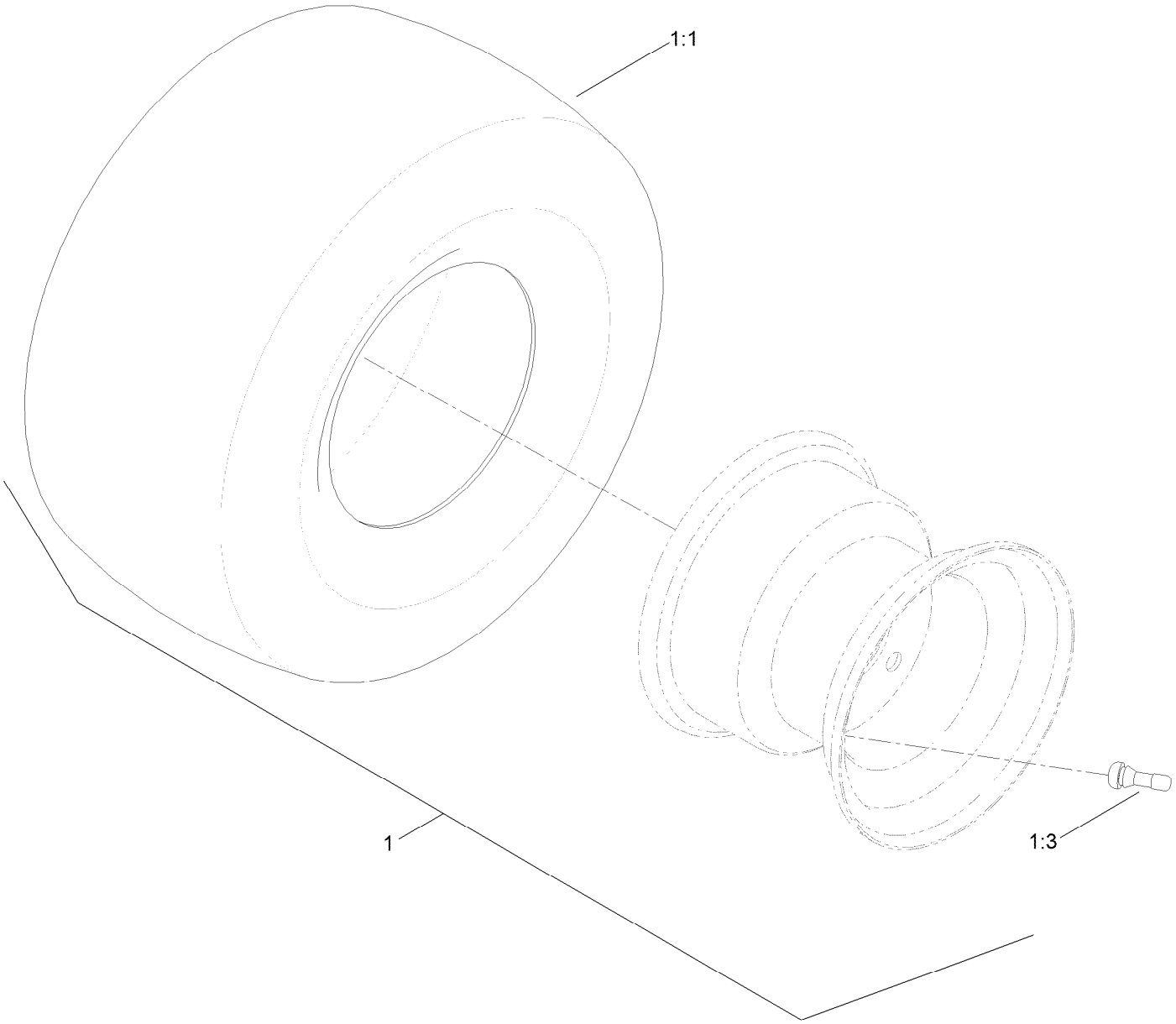

# Rear Tire Assembly (continued)

| Ref. | Part Number | Qty. | Description |
|---|---|---|---|
| 1 | 131-3672 | 2 | 2 Ply Tire And Wheel ASM |
| 1:1 | 131-3679 | 1 | Tire-2Ply |
| 1:3 | 232-27 | 1 | Stem-Valve |
| 1:99 | 232-37 | 1 | Tube ● |

● Not illustrated

# Seat Pan Assembly

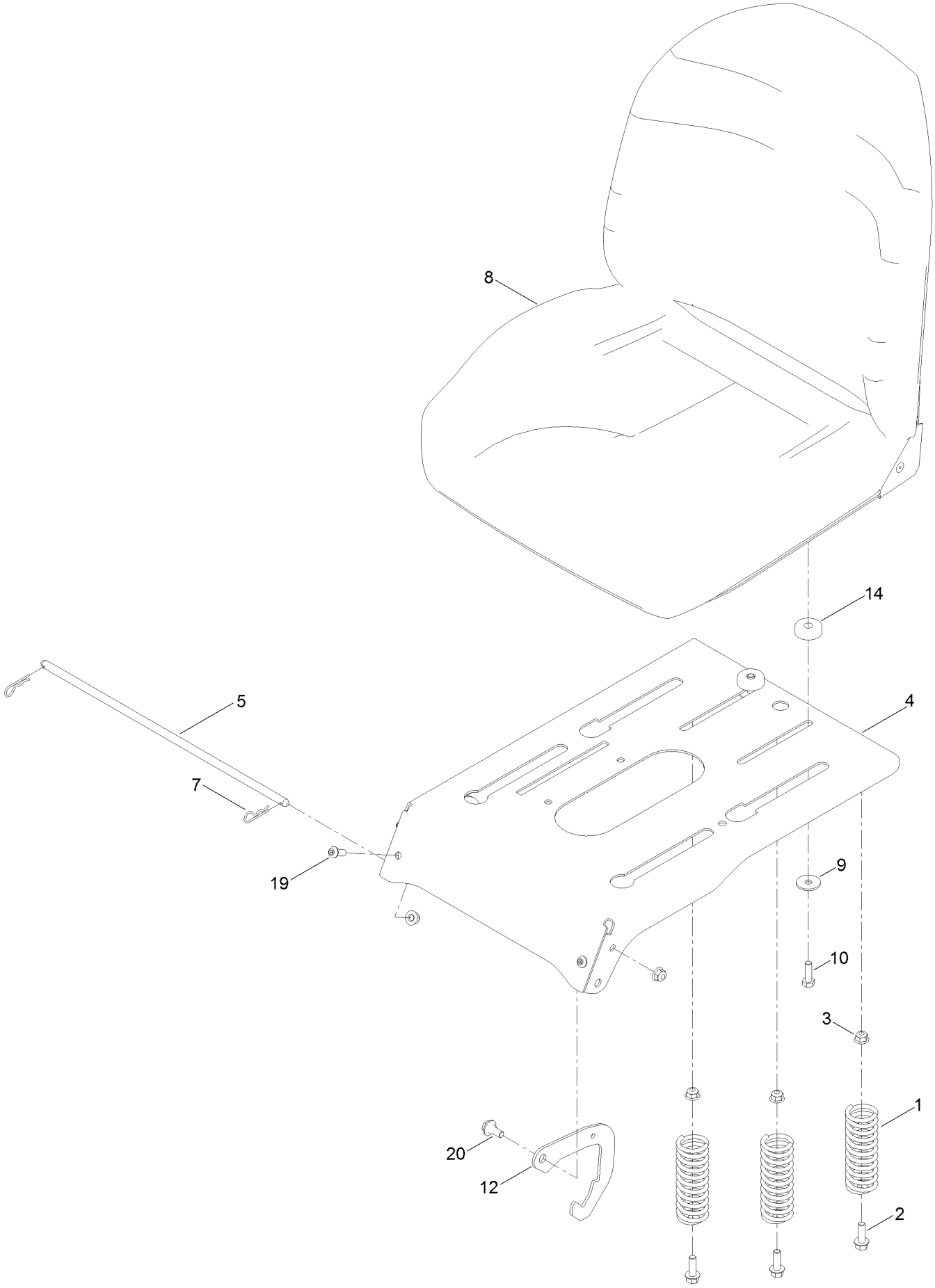

# Seat Pan Assembly (continued)

| Ref. | Part Number | Qty. | Description |
|---|---|---|---|
| 1 | 92-7054 | 3 | Spring-Compression |
| 2 | 3234-29 | 3 | Screw-HHF |
| 3 | 104-8300 | 7 | Nut-HF, NI |
| 4 | 136-5571-01 | 1 | Pan-Seat, Deluxe |
| 5 | 119-3433 | 1 | Rod-Pivot, Narrow |
| 7 | 3290-250 | 2 | Pin-Cotter |
| 8 | 136-5575 | 1 | Seat ASM |
| 9 | 5-4460 | 2 | Washer-Pivot |
| 10 | 322-5 | 2 | Screw-HH |
| 12 | 132-9353 | 2 | Latch-Seat |
| 14 | 136-5572 | 2 | Bushing-Slide, Seat |
| 19 | 3274-55 | 2 | Screw-HSBH |
| 20 | 19-1470 | 2 | Screw-Shoulder |

# Motion Control Assembly

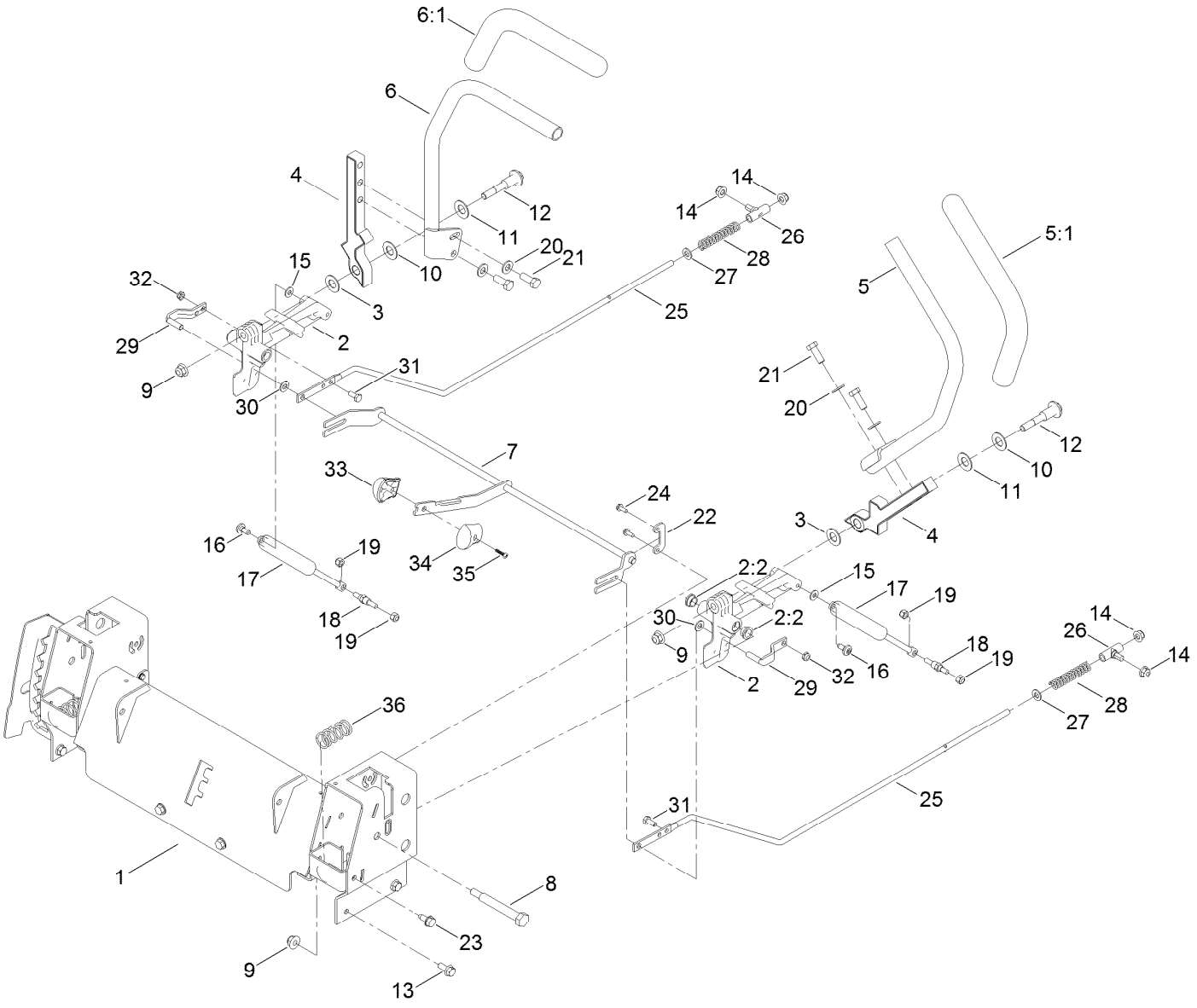

# Motion Control Assembly (continued)

| Ref. | Part Number | Qty. | Description |
|---|---|---|---|
| 1 | 137-7038-03 | 1 | Control Box ASM |
| 2 | 119-3470 | 2 | Actuator Arm ASM |
| 2:2 | 256-156 | 2 | Bushing-Flange |
| 3 | 120-2273 | 2 | Washer-Nylon |
| 4 | 133-9299-05 | 2 | Arm-Control |
| 5 | 133-7055 | 1 | Handle-Control, LH |
| 5:1 | 121-0726 | 1 | Grip |
| 6 | 133-7057 | 1 | Handle-Control, RH |
| 6:1 | 121-0726 | 1 | Grip |
| 7 | 133-9301 | 1 | Speed Control ASM |
| 8 | 115-5099 | 2 | Bolt-Pivot |
| 9 | 104-8301 | 4 | Nut-HF, NI |
| 10 | 117-1240 | 2 | Washer |
| 11 | 119-8925 | 2 | Washer-Belleville |
| 12 | 117-1198 | 2 | Bolt-Pivot |
| 13 | 3234-47 | 6 | Screw-HHF |
| 14 | 104-8300 | 10 | Nut-HF, NI |
| 15 | 119-8952 | 2 | Washer |
| 16 | 120-7950 | 2 | Screw-Shoulder |
| 17 | 131-4132 | 2 | Damper |
| 18 | 110-6810 | 2 | Stud-Damper |
| 19 | 3296-42 | 4 | Nut-Lock, NI |
| 20 | 3256-24 | 4 | Washer-Flat |
| 21 | 323-6 | 4 | Screw-HH |
| 22 | 117-5385 | 2 | Retainer |
| 23 | 32144-70 | 4 | Screw-HWHTF |
| 24 | 32144-1 | 4 | Screw-Taptite |
| 25 | 117-5388 | 2 | Rod-Hydro |
| 26 | 119-8842 | 2 | Mount-Rod, Hydro |
| 27 | 3256-23 | 2 | Washer-Plain |
| 28 | 1-603807 | 2 | Spring-Return, Neutral |
| 29 | 121-1753 | 2 | Pin-Rod, Hydro |
| 30 | 93-6079 | 2 | Spacer-Nylon |
| 31 | 321-3 | 2 | Screw-HH |
| 32 | 3296-56 | 2 | Nut-Lock, NI |
| 33 | 132-9368 | 1 | Knob-RH |
| 34 | 132-9369 | 1 | Knob-LH |
| 35 | 94-4496 | 1 | Screw-PPH |
| 36 | 119-8876 | 2 | Spring-Return |

# Engine Assembly

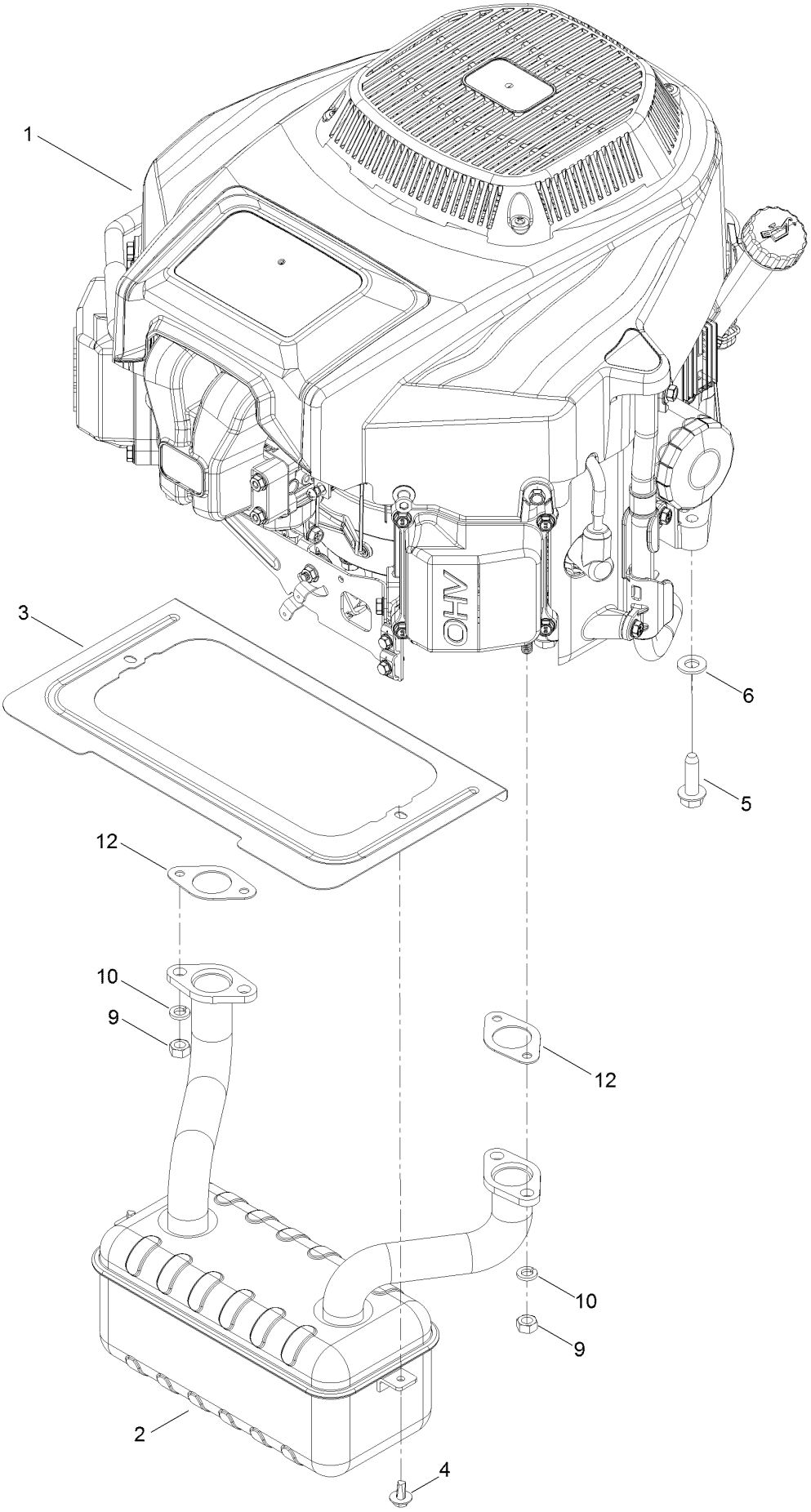

# Engine Assembly (continued)

| Ref. | Part Number | Qty. | Description |
|---|---|---|---|
| 1 | 127-9041 | 1 | Engine-2P77F |
| 2 | 130-6851 | 1 | Muffler |
| 3 | 131-1071-03 | 1 | Shield-Heat |
| 4 | 46-8560 | 2 | Screw-HHFTF |
| 5 | 32144-109 | 4 | Screw-Thd Form HWH |
| 6 | 3256-24 | 3 | Washer-Flat |
| 9 | 121-0199 | 4 | Nut-HH |
| 10 | 127-9279 | 4 | Washer-Lock, Split |
| 12 | 120-4317 | 2 | Gasket-Exhaust |

# Fuel System Assembly

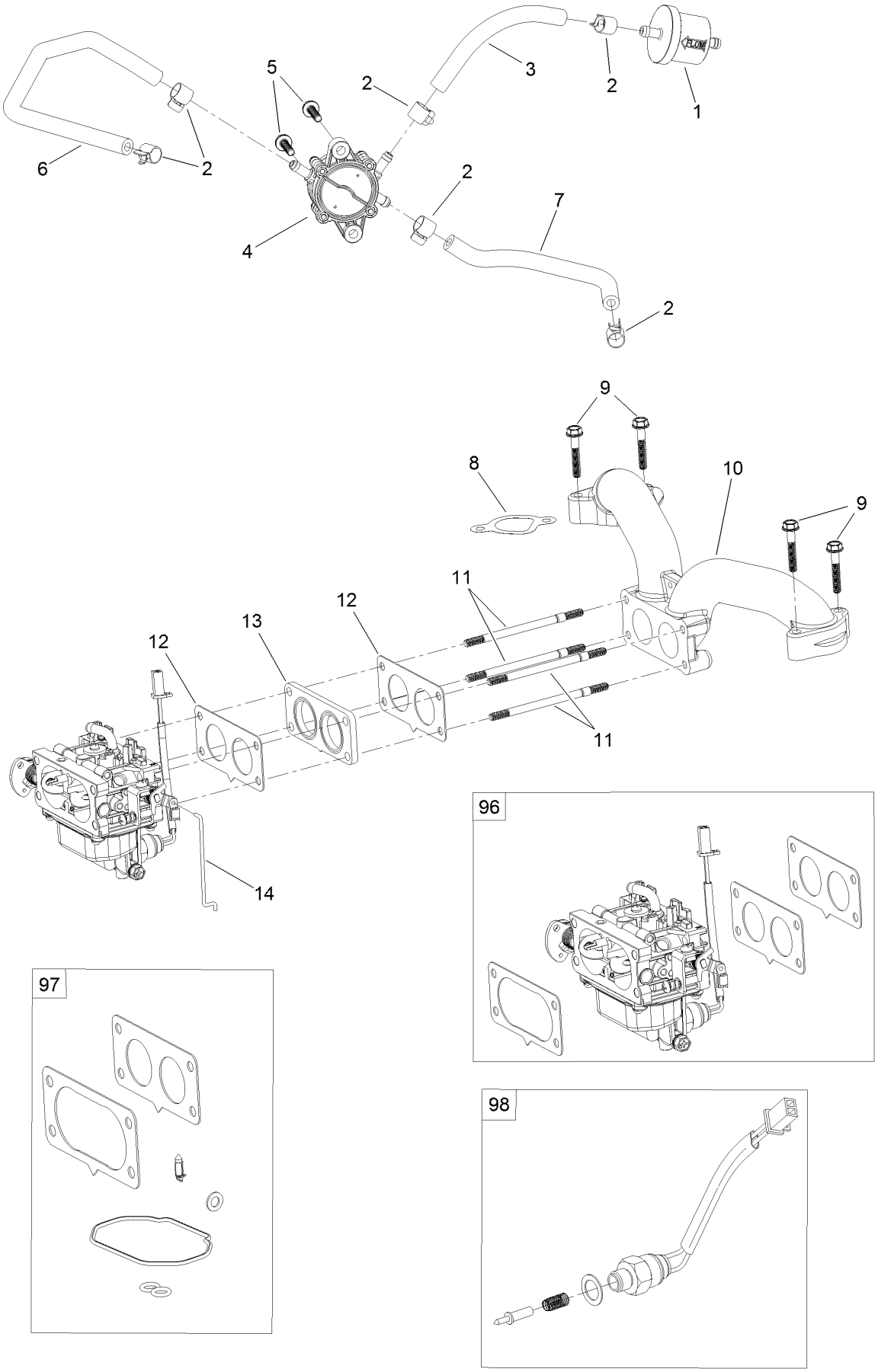

# Fuel System Assembly (continued)

| Ref. | Part Number | Qty. | Description |
|---|---|---|---|
| 1 | 133-1563 | 1 | Filter-Fuel |
| 2 | 120-4251 | 6 | Clamp-Fuel Line |
| 3 | 120-4371 | 1 | Line-Fuel |
| 4 | 127-9206 | 1 | Pump-Fuel |
| 5 | 120-4225 | 2 | Screw-HHF |
| 6 | 127-9205 | 1 | Hose-Fuel |
| 7 | 127-9207 | 1 | Hose-Fuel |
| 8 | 127-9230 | 2 | Gasket-Intake |
| 9 | 120-4284 | 4 | Screw-HHF |
| 10 | 127-9244 | 1 | Manifold-Intake |
| 11 | 127-9245 | 4 | Stud |
| 12 | 127-9246 | 2 | Gasket-Carburetor |
| 13 | 127-9247 | 1 | Insulator-Carburetor |
| 14 | 127-9248 | 1 | Linkage-Throttle |
| 96 | 127-9289 | 1 | Carburetor Replacement Kit |
| 97 | 127-9290 | 1 | Carburetor Repair Kit |
| 98 | 127-9292 | 1 | Solenoid Kit |
| 99 | 127-9303 | 1 | High Altitude Kit ● |

● Not illustrated

# Carburetor Assembly

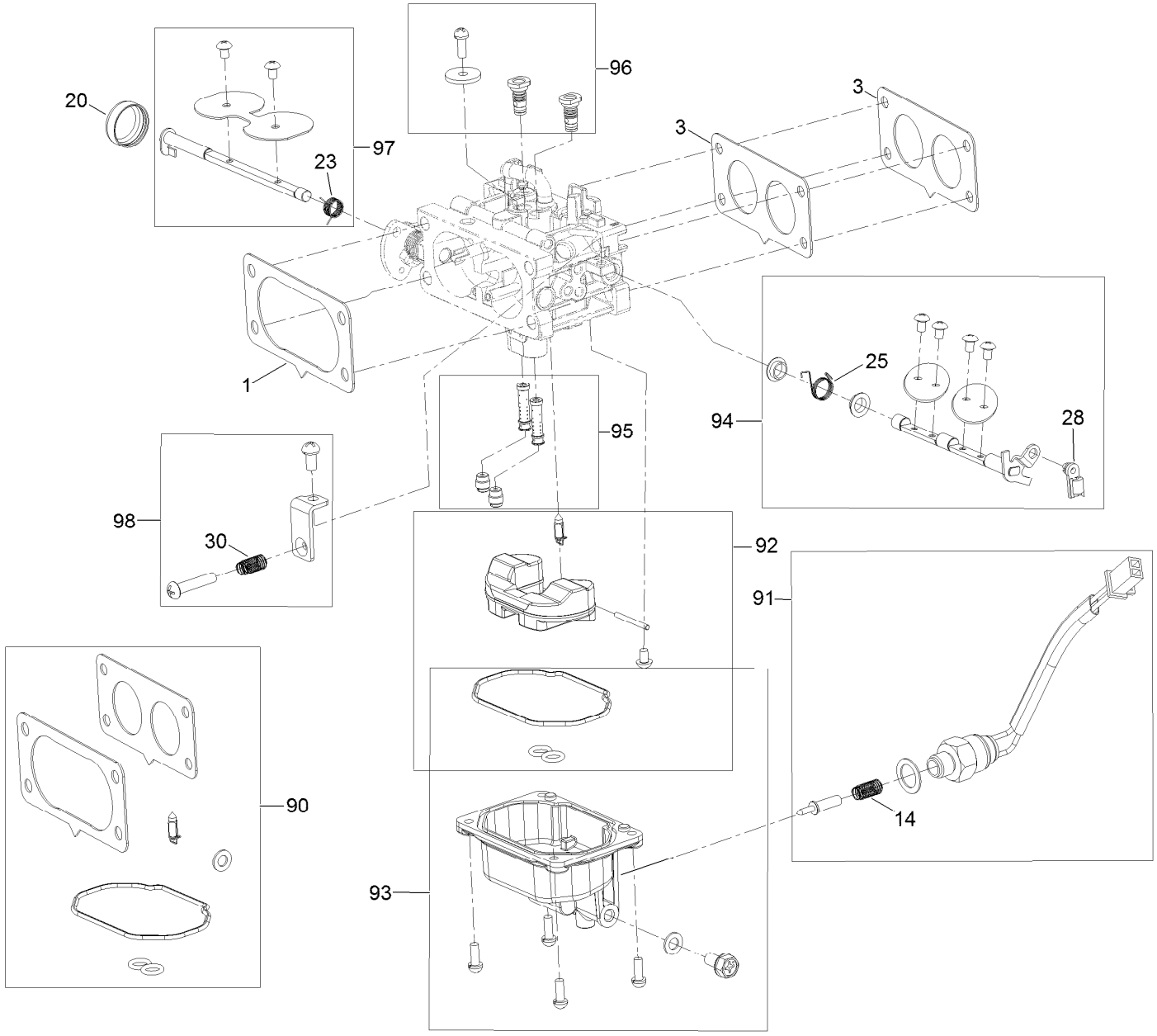

# Carburetor Assembly (continued)

| Ref. | Part Number | Qty. | Description |
|---|---|---|---|
| 1 | 127-9251 | 1 | Gasket-Carburetor |
| 3 | 127-9246 | 2 | Gasket-Carburetor |
| 14 | 127-9319 | 1 | Spring |
| 20 | 127-9325 | 1 | Cover-Shaft, Choke |
| 23 | 127-9328 | 1 | Spring |
| 25 | 127-9330 | 1 | Spring |
| 28 | 127-9333 | 1 | Clamp-Lock |
| 30 | 127-9335 | 1 | Spring |
| 90 | 127-9290 | 1 | Carburetor Repair Kit |

| Ref. | Part Number | Qty. | Description |
|---|---|---|---|
| 91 | 127-9292 | 1 | Solenoid Kit |
| 92 | 127-9340 | 1 | Float Kit |
| 93 | 127-9341 | 1 | Bowl Kit |
| 94 | 127-9342 | 1 | Throttle Shaft Kit |
| 95 | 127-9343 | 1 | Nozzle And Jet Kit |
| 96 | 127-9344 | 1 | Air Jet Kit |
| 97 | 127-9345 | 1 | Choke Shaft Kit |
| 98 | 127-9347 | 1 | Idlestop Kit |

# Air Intake and Filtration Assembly

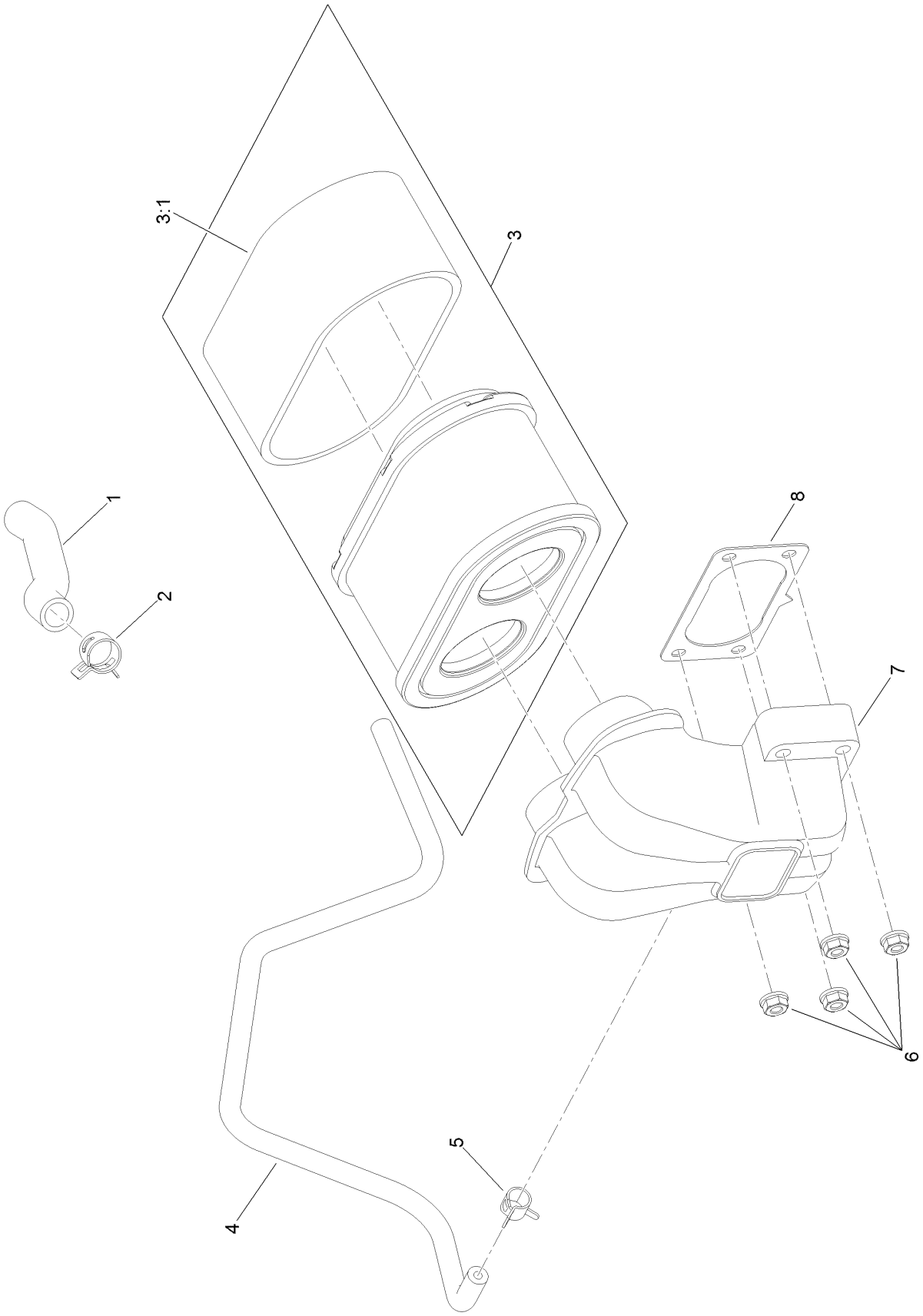

# Air Intake and Filtration Assembly (continued)

| Ref. | Part Number | Qty. | Description |
|---|---|---|---|
| 1 | 127-9235 | 1 | Tube-Breather |
| 2 | 127-9234 | 2 | Clamp-Hose |
| 3 | 127-9252 | 1 | Filter-Air, Complete |
| 3:1 | 127-9288 | 1 | Filter-Pre, Foam |
| 4 | 127-9253 | 1 | Hose-Fuel |
| 5 | 127-9187 | 1 | Clamp-Hose |
| 6 | 120-4236 | 4 | Nut-Flange |
| 7 | 127-9047 | 1 | Manifold-Filter, Air |
| 8 | 127-9251 | 1 | Gasket-Carburetor |

# Ignition and Electrical Assembly

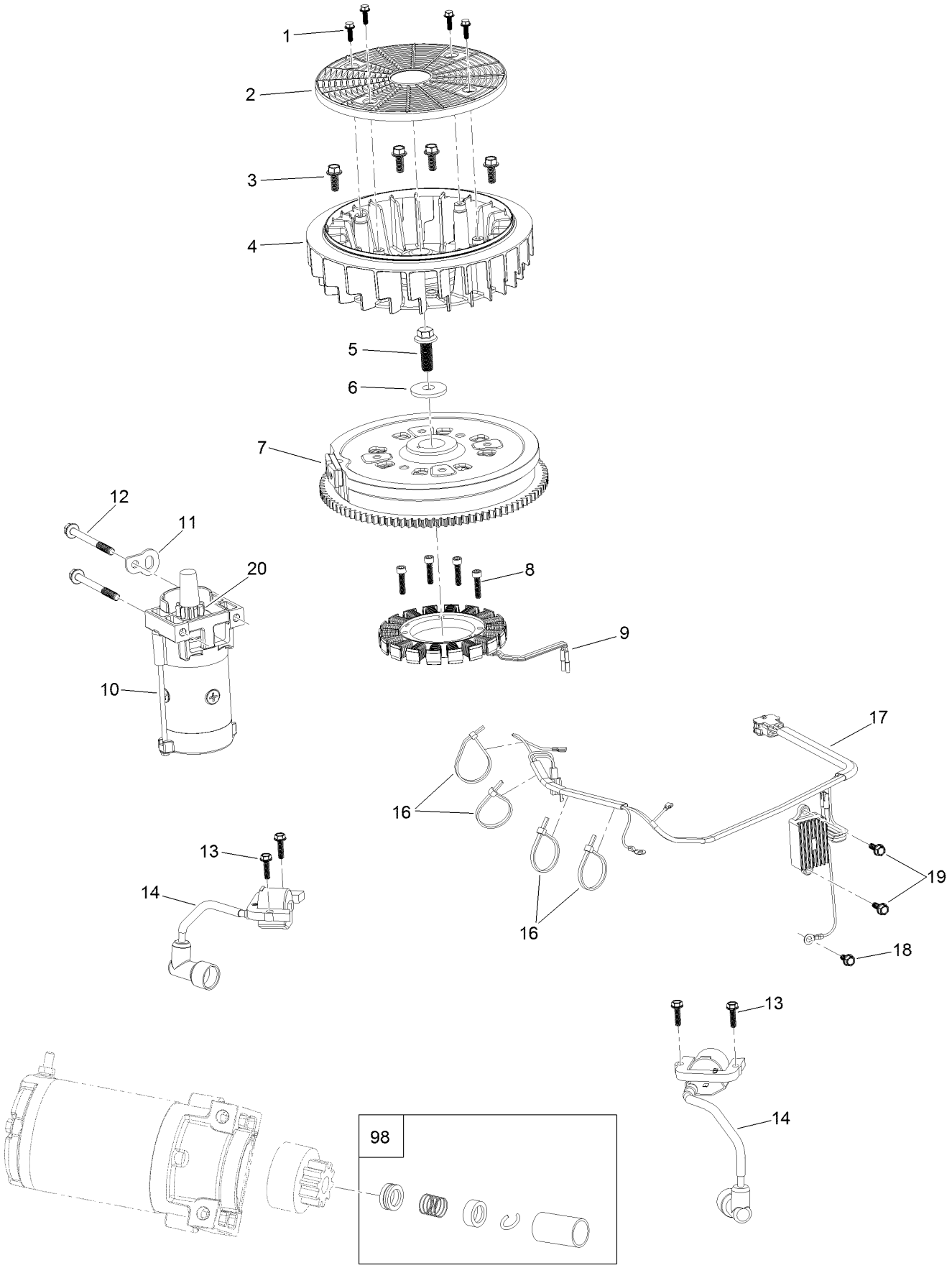

# Ignition and Electrical Assembly (continued)

| Ref. | Part Number | Qty. | Description |
|---|---|---|---|
| 1 | 127-9197 | 4 | Screw-HWH |
| 2 | 127-9198 | 1 | Screen-Rotating |
| 3 | 127-9199 | 4 | Screw-HWH |
| 4 | 127-9200 | 1 | Fan-Cooling |
| 5 | 127-9201 | 1 | Screw-HWH |
| 6 | 127-9202 | 1 | Washer-Flat |
| 7 | 127-9306 | 1 | Flywheel |
| 8 | 127-9210 | 4 | Screw-HSH |
| 9 | 127-9211 | 1 | Alternator |
| 10 | 133-9828 | 1 | Motor-Starter |
| 11 | 127-9208 | 1 | Bracket-Lift |
| 12 | 120-4231 | 2 | Screw-HHF |
| 13 | 121-0007 | 4 | Bolt-Flange |
| 14 | 127-9216 | 2 | Ignition Coil ASM |
| 16 | 127-9220 | 4 | Tie-Zip |
| 17 | 127-9219 | 1 | Regulator-Voltage W/Harness |
| 18 | 120-4216 | 1 | Screw-HHF |
| 19 | 120-4232 | 2 | Screw-HHF |
| 20 | 133-1562 | 1 | Pinion-Starter |
| 98 | 133-1566 | 1 | Starter Repair Kit |

# Crankcase and Crankshaft Assembly

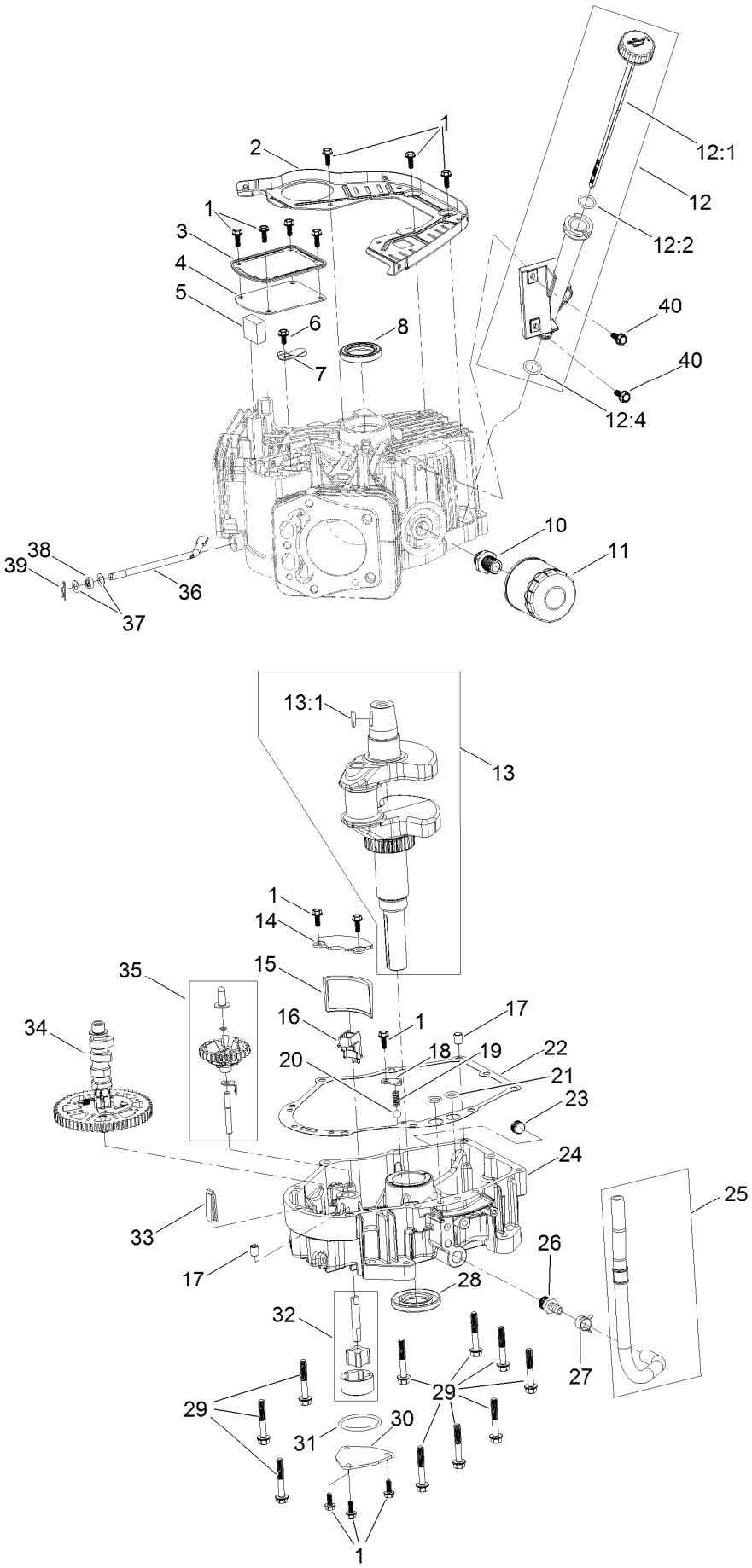

# Crankcase and Crankshaft Assembly (continued)

| Ref. | Part Number | Qty. | Description |
|---|---|---|---|
| 1 | 120-4232 | 14 | Screw-HHF |
| 2 | 127-9212 | 1 | Baffle |
| 3 | 127-9213 | 1 | Cover-Breather |
| 4 | 127-9214 | 1 | Gasket-Breather |
| 5 | 127-9215 | 1 | Filter-Breather |
| 6 | 120-4216 | 1 | Screw-HHF |
| 7 | 127-9217 | 1 | Valve-Breather |
| 8 | 120-4267 | 1 | Seal-Oil |
| 10 | 120-4346 | 1 | Adaptor-Filter, Oil |
| 11 | 120-4276 | 1 | Filter-Oil |
| 12 | 127-9218 | 1 | Oil Tube ASM |
| 12:1 | 127-9283 | 1 | Dipstick |
| 12:2 | 127-9284 | 1 | O-Ring |
| 12:4 | 127-9286 | 1 | O-Ring |
| 13 | 127-9255 | 1 | Crankshaft |
| 13:1 | 120-4320 | 1 | Key-Woodruff |
| 14 | 127-9261 | 1 | Cover-Screen, Oil |
| 15 | 127-9262 | 1 | Screen-Oil |
| 16 | 127-9263 | 1 | Retainer-Screen |
| 17 | 120-4274 | 2 | Pin-Dowel |
| 18 | 127-9264 | 1 | Plate-Retainer |
| 19 | 127-9265 | 1 | Spring |
| 20 | 127-9266 | 1 | Valve-Ball |
| 21 | 120-4262 | 2 | O-Ring |
| 22 | 127-9267 | 1 | Gasket-Cover, Crankcase |
| 23 | 133-9805 | 1 | Plug-Drain |
| 24 | 127-9268 | 1 | Cover-Crankcase |
| 25 | 127-9293 | 1 | Oil Drain Hose ASM |
| 26 | 127-9275 | 1 | Fitting-Hose |
| 27 | 127-9276 | 1 | Clamp-Hose |
| 28 | 127-9271 | 1 | Seal |
| 29 | 121-0473 | 10 | Screw-HHF |
| 30 | 127-9274 | 1 | Cover-Oil Pump |
| 31 | 127-9273 | 1 | O-Ring |
| 32 | 127-9272 | 1 | Oil Pump ASM |
| 33 | 120-4275 | 1 | Deflector-Oil, Rubber |
| 34 | 133-1568 | 1 | Camshaft |
| 35 | 133-9807 | 1 | Governor ASM |
| 36 | 127-9238 | 1 | Shaft-Governor |
| 37 | 120-4258 | 2 | Washer-Plain |
| 38 | 120-4257 | 1 | Seal-Oil |
| 39 | 120-4256 | 1 | Pin-Hair |
| 40 | 120-4232 | 2 | Screw-HHF |

# Governor Control Assembly

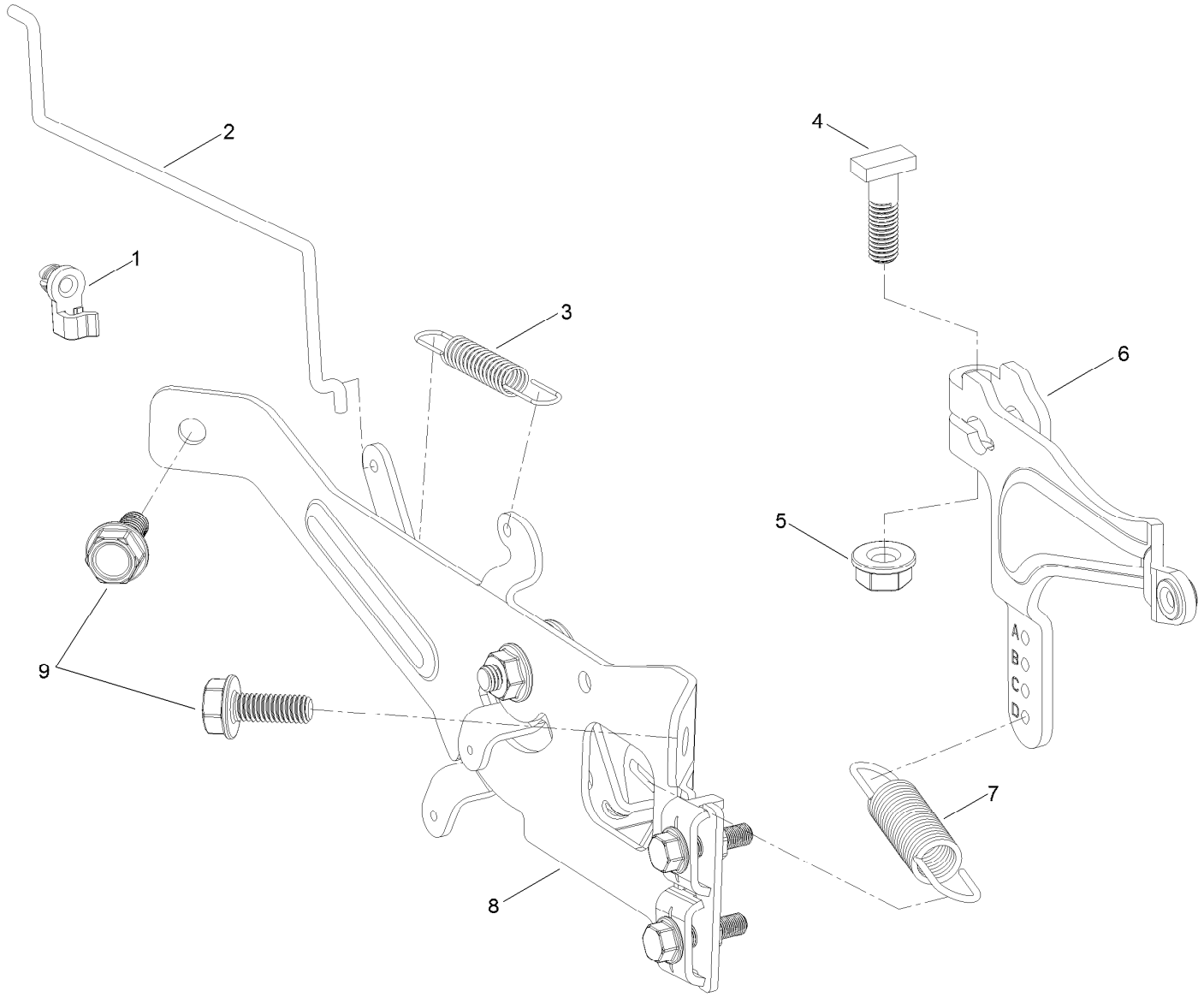

# Governor Control Assembly (continued)

| Ref. | Part Number | Qty. | Description |
|---|---|---|---|
| 1 | 127-9250 | 1 | Clip-Linkage |
| 2 | 127-9242 | 1 | Linkage-Choke |
| 3 | 127-9241 | 1 | Spring-Governor |
| 4 | 120-4238 | 1 | Bolt-Arm, Governor |
| 5 | 120-4236 | 1 | Nut-Flange |
| 6 | 127-9239 | 1 | Arm-Governor |
| 7 | 133-9809 | 1 | Spring-Governor |
| 8 | 133-1570 | 1 | Control Plate ASM |
| 9 | 120-4232 | 2 | Screw-HHF |

# Piston and Cylinder Head Assembly

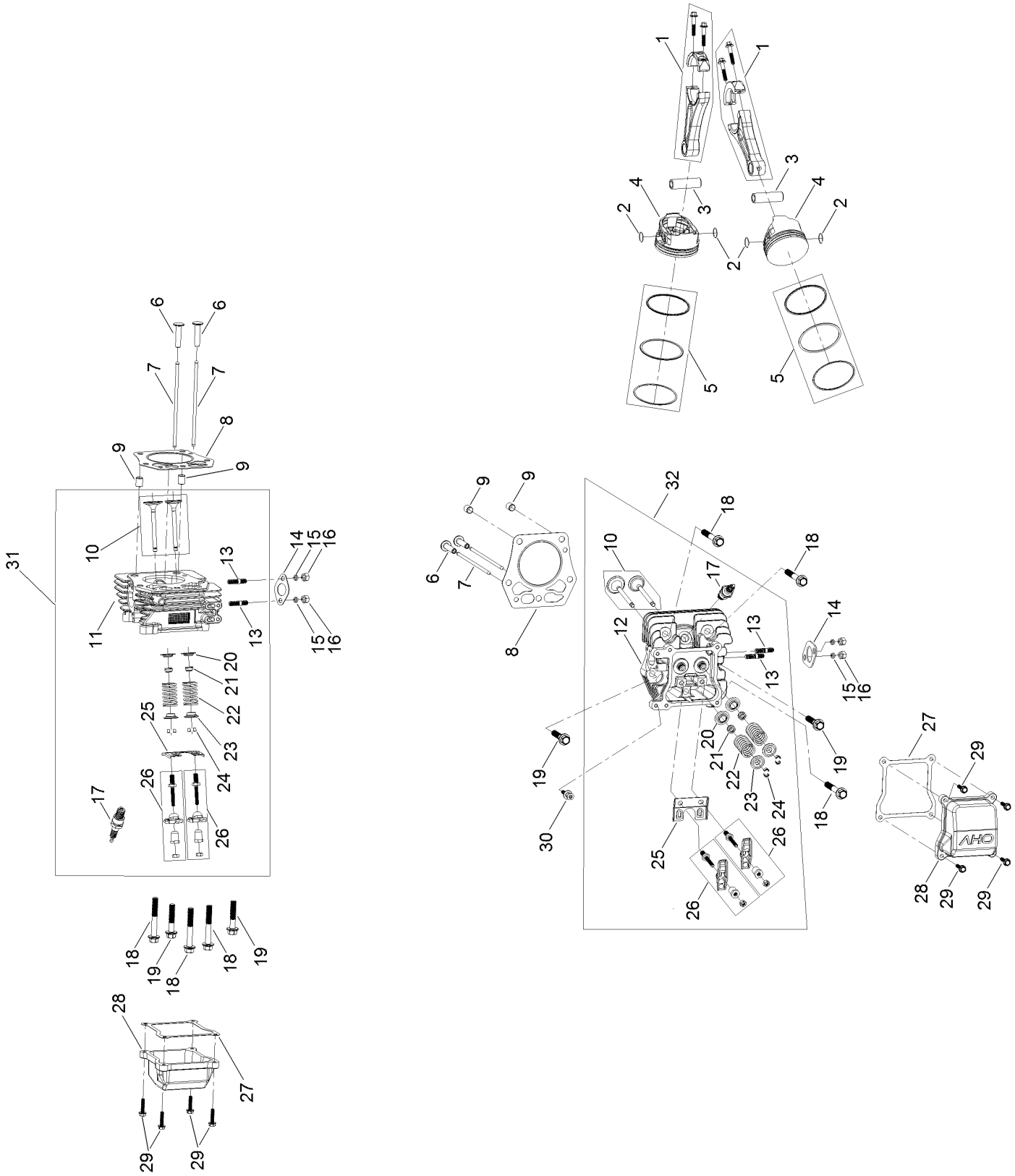

# Piston and Cylinder Head Assembly (continued)

| Ref. | Part Number | Qty. | Description |
|---|---|---|---|
| 1 | 127-9256 | 2 | Connecting Rod ASM |
| 2 | 127-9258 | 4 | Clip-Pin, Piston |
| 3 | 127-9257 | 2 | Pin-Piston |
| 4 | 127-9259 | 2 | Piston |
| 5 | 127-9260 | 2 | Piston Ring Set |
| 6 | 127-9224 | 4 | Lifter-Valve |
| 7 | 127-9225 | 4 | Rod-Push |
| 8 | 127-9226 | 2 | Gasket-Head, Cylinder |
| 9 | 127-9227 | 4 | Pin-Dowel |
| 10 | 127-9228 | 2 | Valve Set |
| 11 | 127-9229 | 1 | Head-Cylinder |
| 12 | 127-9254 | 1 | Head-Cylinder |
| 13 | 121-0464 | 4 | Stud-Exhaust |
| 14 | 120-4317 | 2 | Gasket-Exhaust |
| 15 | 127-9279 | 4 | Washer-Lock, Split |
| 16 | 121-0199 | 4 | Nut-HH |
| 17 | 81-3250 | 2 | Spark Plug |
| 18 | 127-9231 | 6 | Screw-HWH |
| 19 | 127-9232 | 4 | Screw-HWH |
| 20 | 120-4303 | 4 | Seat-Spring, Valve |
| 21 | 120-4304 | 4 | Seal-Stem, Valve |
| 22 | 120-4305 | 4 | Spring-Valve |
| 23 | 120-4306 | 4 | Retainer-Spring, Valve |
| 24 | 120-4307 | 8 | Keeper-Valve |
| 25 | 127-9233 | 2 | Plate-Guide, Push Rod |
| 26 | 127-9294 | 4 | Rocker Arm ASM |
| 27 | 127-9295 | 2 | Gasket-Valve Cover |
| 28 | 127-9050 | 2 | Cover-Valve |
| 29 | 120-4225 | 8 | Screw-HHF |
| 30 | 120-4214 | 1 | Screw-Shoulder, HH |
| 31 | 133-9819 | 1 | Right Head ASM |
| 32 | 133-9820 | 1 | Left Head ASM |

# Blower Housing Assembly

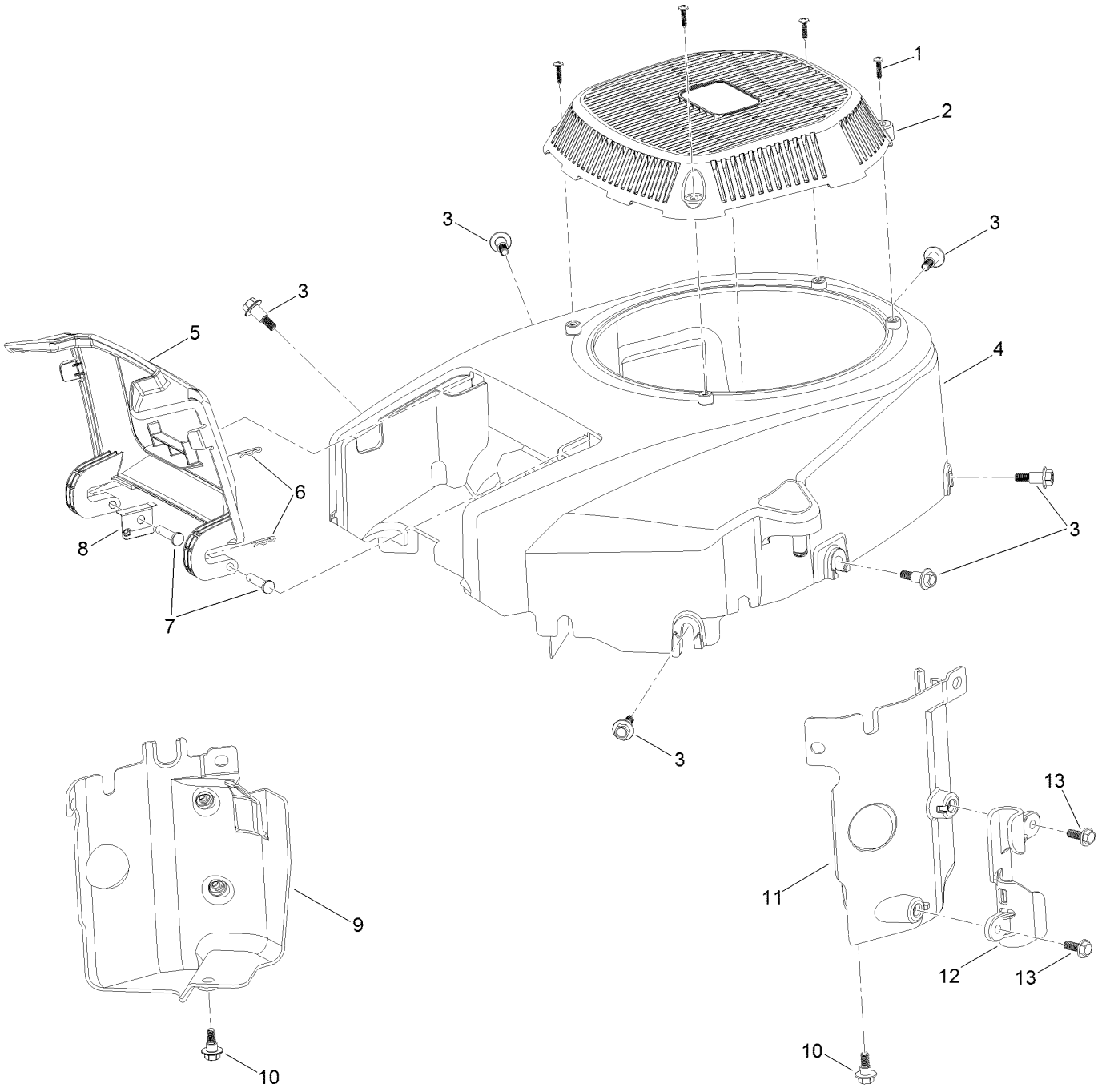

# Blower Housing Assembly (continued)

| Ref. | Part Number | Qty. | Description |
|---|---|---|---|
| 1 | 133-1571 | 4 | Screw-PPH, Plastic |
| 2 | 127-9045 | 1 | Cover-Fan |
| 3 | 127-9196 | 6 | Screw-Shoulder, HWH |
| 4 | 133-1572 | 1 | Shroud-Engine |
| 5 | 127-9046 | 1 | Door-Filter, Air |
| 6 | 127-9280 | 2 | Pin-Hair |
| 7 | 127-9282 | 2 | Pin |
| 8 | 127-9281 | 1 | Plate-Spring |
| 9 | 127-9049 | 1 | Baffle-Air, Left |
| 10 | 120-4210 | 2 | Screw-Shoulder, HHF |
| 11 | 127-9048 | 1 | Baffle-Air, Right |
| 12 | 127-9287 | 1 | Cleat-Hose |
| 13 | 120-4232 | 2 | Screw-HHF |

# Gasket and Seal Kit

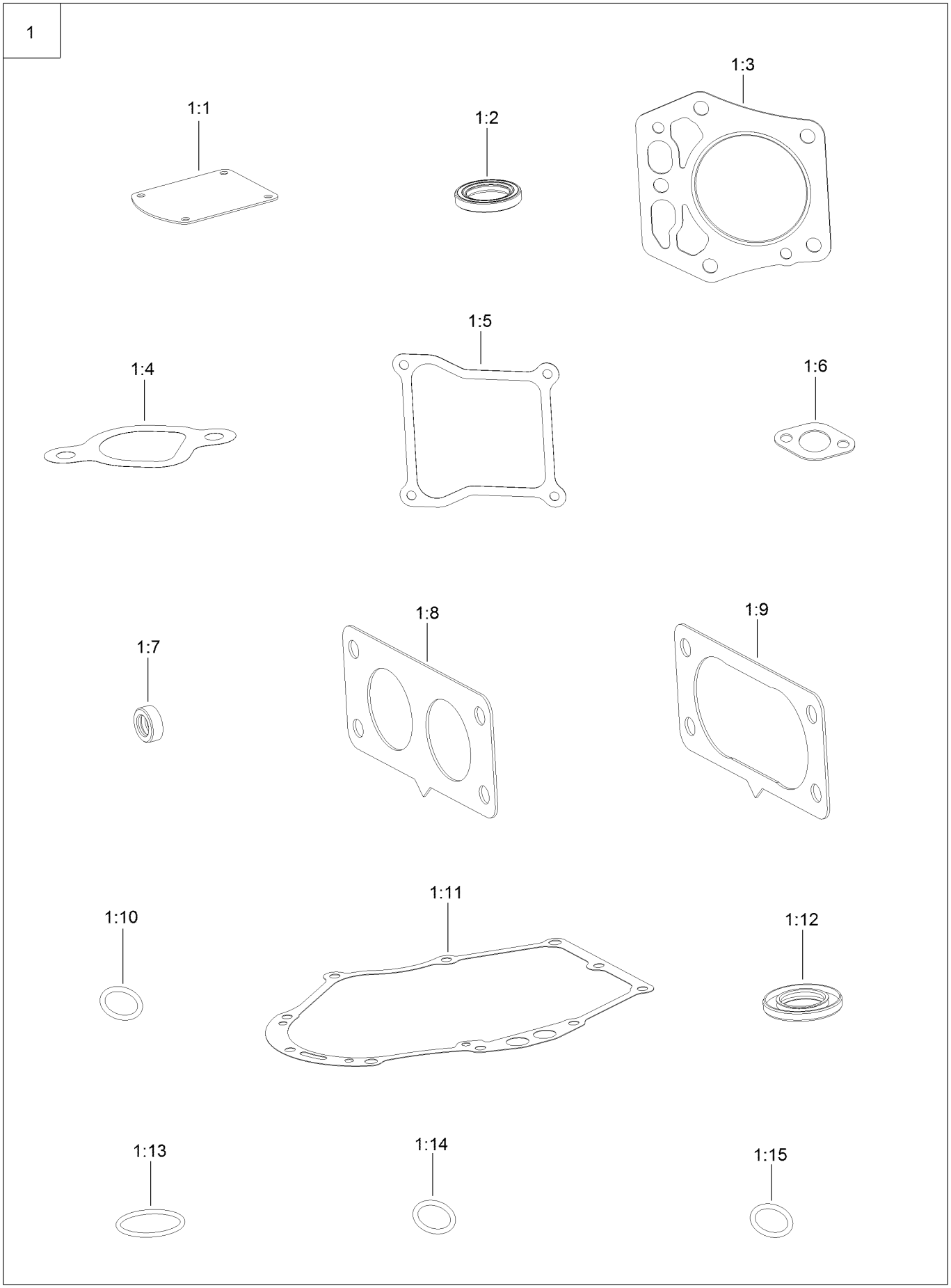

# Gasket and Seal Kit (continued)

| Ref. | Part Number | Qty. | Description |
|---|---|---|---|
| 1 | 127-9296 | 1 | Gasket And Seal Kit |
| 1:1 | 127-9214 | 1 | Gasket-Breather |
| 1:2 | 120-4267 | 1 | Seal-Oil |
| 1:3 | 127-9226 | 2 | Gasket-Head, Cylinder |
| 1:4 | 127-9230 | 2 | Gasket-Intake |
| 1:5 | 127-9295 | 2 | Gasket-Valve Cover |
| 1:6 | 120-4317 | 2 | Gasket-Exhaust |
| 1:7 | 120-4257 | 1 | Seal-Oil |
| 1:8 | 127-9246 | 2 | Gasket-Carburetor |
| 1:9 | 127-9251 | 1 | Gasket-Carburetor |
| 1:10 | 120-4262 | 2 | O-Ring |
| 1:11 | 127-9267 | 1 | Gasket-Cover, Crankcase |
| 1:12 | 127-9271 | 1 | Seal |
| 1:13 | 127-9273 | 1 | O-Ring |
| 1:14 | 127-9284 | 1 | O-Ring |
| 1:15 | 127-9286 | 1 | O-Ring |

# Body Styling and Fuel Tank Assembly

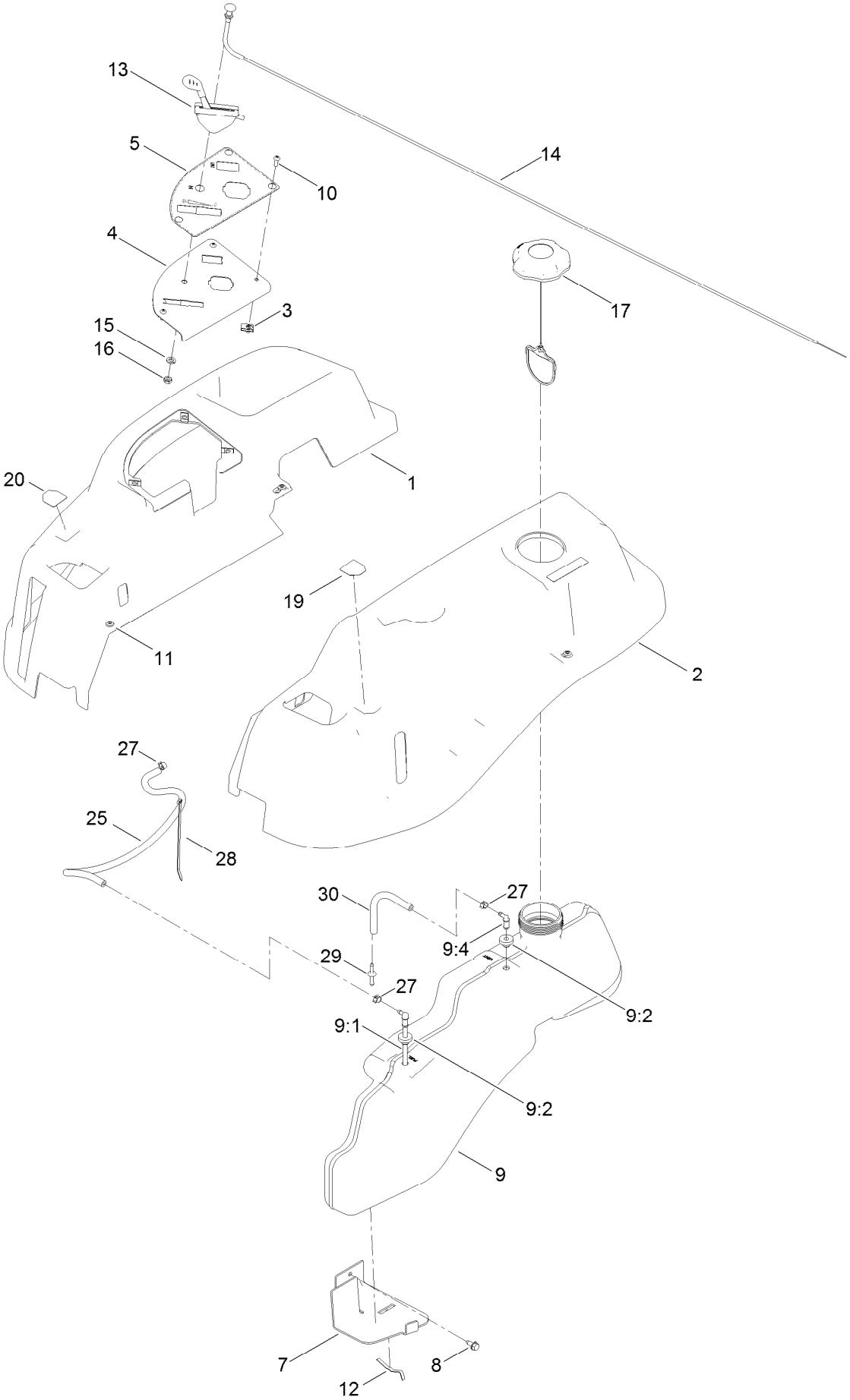

# Body Styling and Fuel Tank Assembly (continued)

| Ref. | Part Number | Qty. | Description |
|---|---|---|---|
| 1 | 119-3338 | 1 | Pod-RH |
| 2 | 119-3337 | 1 | Pod-LH |
| 3 | 107069 | 3 | Clip |
| 4 | 119-3377-03 | 1 | Plate-Control |
| 5 | 121-0773 | 1 | Decal-Panel, Control |
| 7 | 119-3395-03 | 1 | Support-Tank, Front |
| 8 | 32144-70 | 2 | Screw-HWHTF |
| 9 | 119-3324 | 1 | Fuel Tank ASM |
| 9:1 | 121-0793 | 1 | Connector-Elbow, 90 DEG |
| 9:2 | 46-6560 | 2 | Bushing |
| 9:4 | 117-7400 | 1 | Fitting-Plastic |
| 10 | 3258-166 | 3 | Screw-PRH |
| 11 | 120-7950 | 6 | Screw-Shoulder |
| 12 | 609830 | 2 | Spring |
| 13 | 121-0769 | 1 | Cable-Throttle |
| 14 | 112-9753 | 1 | Cable-Choke |
| 15 | 3253-21 | 1 | Washer-Lock |
| 16 | 3220-3 | 1 | Nut-HJ |
| 17 | 137-4119 | 1 | Cap-Fuel, Ratcheting |
| 19 | 119-8814 | 1 | Decal-Lever, Control (LH) |
| 20 | 119-8815 | 1 | Decal-Lever, Control (RH) |
| 25 | 109-0281 | 1 | Hose-Fuel |
| 27 | 2412-98 | 3 | Clamp-Hose |
| 28 | 614249 | 1 | Tie-Cable |
| 29 | 117-5399 | 1 | Adaptor-Orifice |
| 30 | 110-1876 | 1 | Hose-Fuel |

# Battery and Electrical Assembly

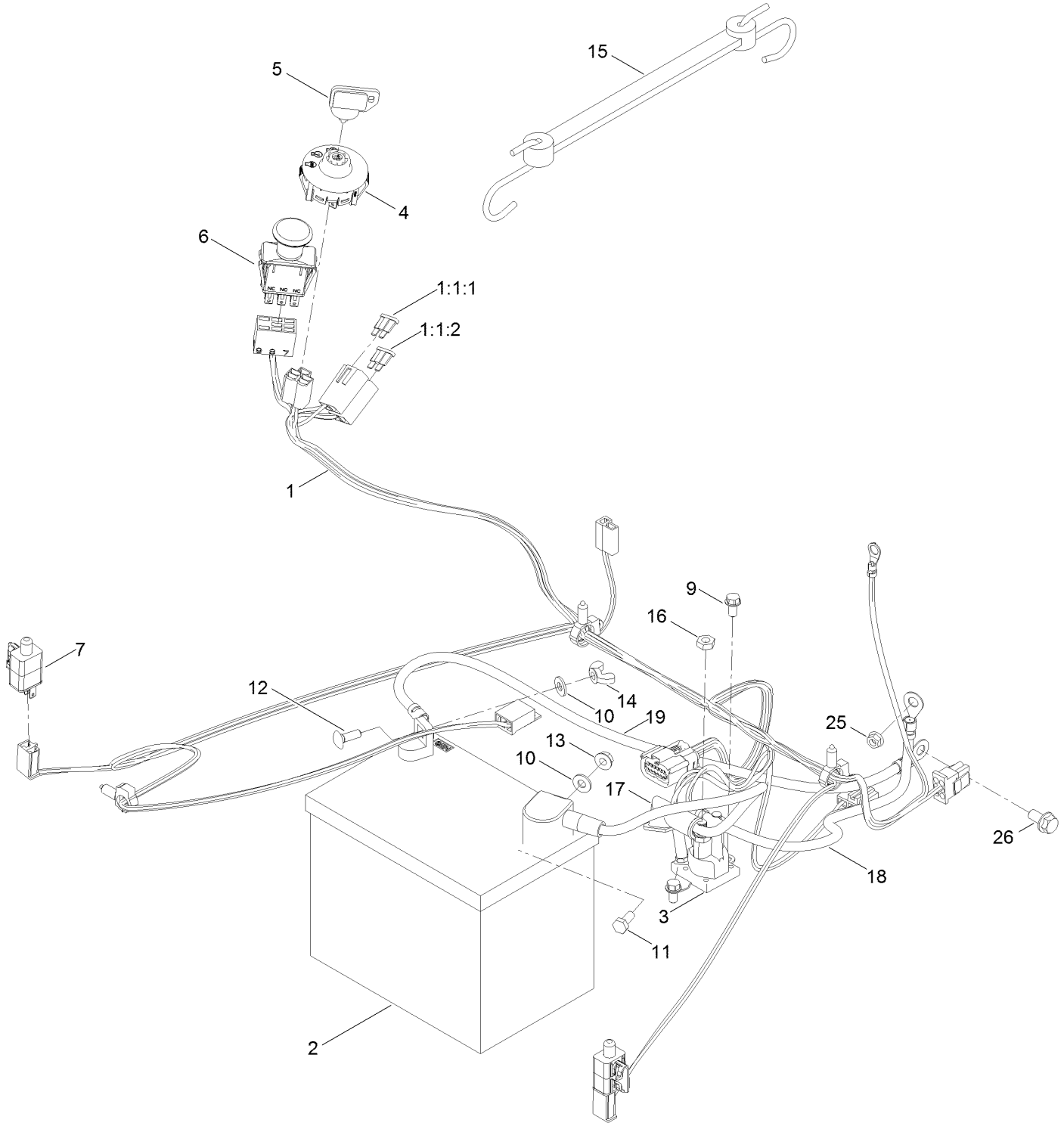

# Battery and Electrical Assembly (continued)

| Ref. | Part Number | Qty. | Description |
|---|---|---|---|
| 1 | 136-7482 | 1 | Harness-Wire |
| 1:1:1 | 109103 | 1 | Fuse-Blade, 30 Amp |
| 1:1:2 | 109102 | 1 | Fuse-Blade, 25 Amp |
| 2 | 105-1692 | 1 | Battery |
| 3 | 117-1197 | 1 | Solenoid |
| 4 | 137-4100 | 1 | Switch-Ignition |
| 5 | 63-8360 | 1 | Key-Ignition |
| 6 | 103-5221 | 1 | Switch-PTO |
| 7 | 110-6765 | 2 | Switch |
| 9 | 32144-4 | 2 | Screw-HWH |
| 10 | 3256-22 | 2 | Washer-Flat |
| 11 | 321-3 | 1 | Screw-HH |
| 12 | 3229-1 | 1 | Bolt-CARR |
| 13 | 32128-33 | 1 | Nut-HF |
| 14 | 32103-22 | 1 | Nut-Wing |
| 15 | 104-2466 | 1 | Holddown-Battery |
| 16 | 3220-2 | 2 | Nut-Jam |
| 17 | 119-8897 | 1 | Cable-Battery, Red |
| 18 | 121-0711 | 1 | Cable-Battery, Positive |
| 19 | 119-8899 | 1 | Cable-Battery, Black |
| 25 | 33003-00 | 1 | Nut-HF |
| 26 | 3234-14 | 1 | Screw-HHF |

# 50 Inch Deck, Belt and Blade Assembly

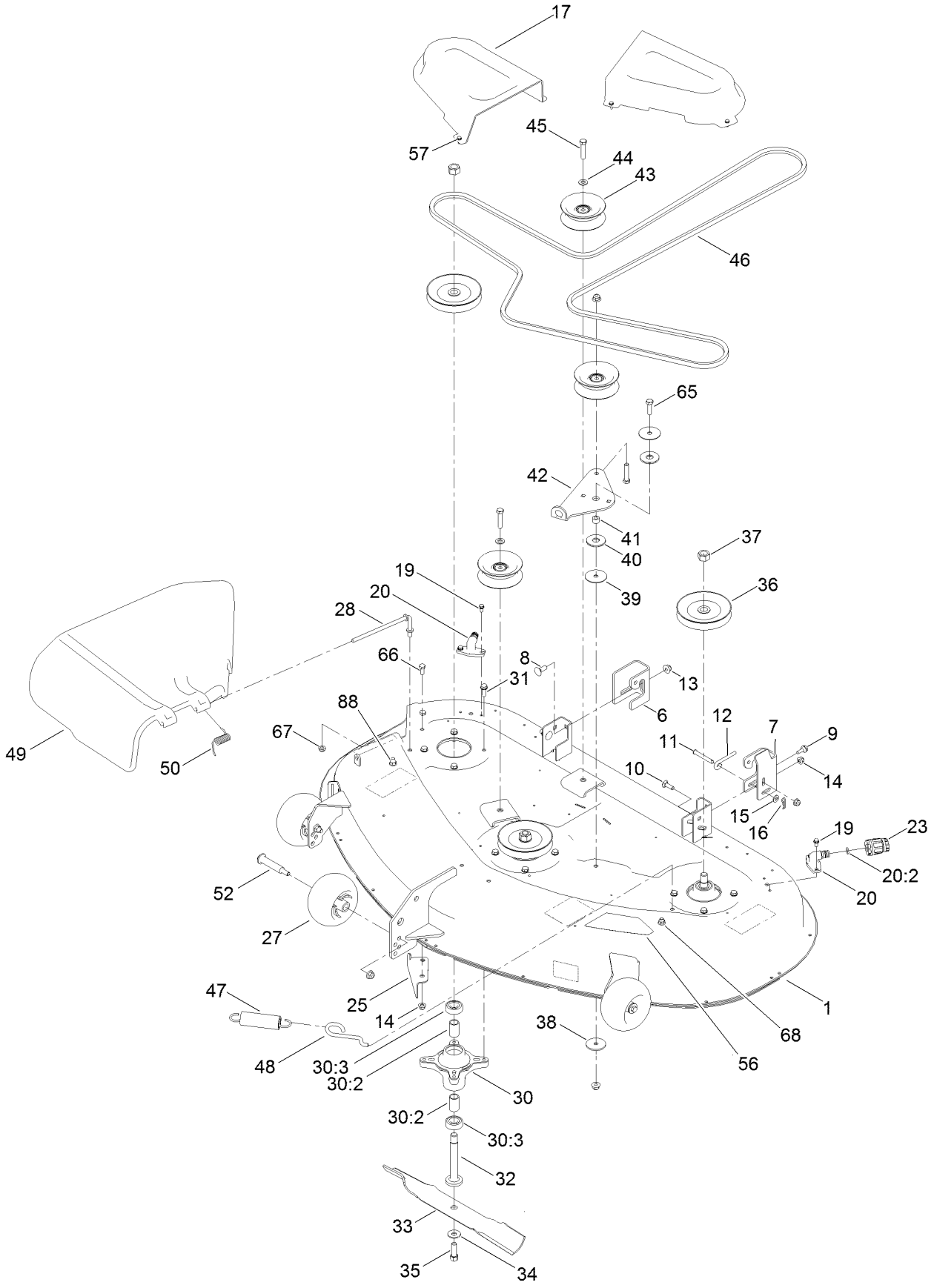

# 50 Inch Deck, Belt and Blade Assembly (continued)

| Ref. | Part Number | Qty. | Description |
|---|---|---|---|
| 1 | 131-3606 | 1 | 50 Inch Deck And Decal ASM |
| 6 | 131-4138 | 1 | Bracket-Hanger, RH |
| 7 | 131-1091 | 1 | Bracket-Hanger, LH |
| 8 | 3231-2 | 2 | Bolt-CARR |
| 9 | 120-7024 | 1 | Screw-Shoulder, HHF |
| 10 | 3230-22 | 1 | Screw-CARR |
| 11 | 110-0618 | 1 | Pin-Clevis |
| 12 | 131-0955 | 1 | Rod-Level, Deck |
| 13 | 104-8301 | 7 | Nut-HF, NI |
| 14 | 104-8300 | 6 | Nut-HF, NI |
| 15 | 3256-23 | 1 | Washer-Plain |
| 16 | 1-806003 | 1 | Pin-Cotter |
| 17 | 108-7890 | 2 | Cover-Belt |
| 19 | 32144-4 | 4 | Screw-HWH |
| 20 | 133-9289 | 2 | Fitting-Washout |
| 20:2 | 133-9290 | 1 | O-Ring |
| 23 | 95-3270 | 1 | Connector-Hose |
| 25 | 112-3983-03 | 1 | Baffle-Cutoff |
| 27 | 1-603299 | 3 | Roller-Scalp, Anti |
| 28 | 112-3950 | 1 | Rod-Pivot |
| 30 | 121-0751 | 3 | Spindle ASM |
| 30:2 | 120-7935 | 2 | Spacer |
| 30:3 | 136-5441 | 2 | Bearing-Ball |
| 31 | 32144-41 | 12 | Screw-Taptite |
| 32 | 117-7268 | 3 | Shaft-Spindle |
| 33 | 115-5059-03 | 3 | Blade-Hi Lift |
| 34 | 3290-465 | 3 | Washer-Belleville |
| 35 | 26-0671 | 3 | Screw-HH |
| 36 | 125-5575 | 3 | Pulley |
| 37 | 3219-6 | 3 | Nut-Hex |
| 38 | 63-7400 | 1 | Washer-Rebound |
| 39 | 120-2229 | 2 | Washer |
| 40 | 114-0463 | 2 | Washer-Friction, Composite |
| 41 | 115-4986 | 1 | Spacer |
| 42 | 114-8540 | 1 | Arm-Idler |
| 43 | 132-9420 | 3 | Pulley-Idler, Flat |
| 44 | 3256-24 | 2 | Washer-Flat |
| 45 | 323-9 | 3 | Screw-HH |
| 46 | 119-8820 | 1 | V-Belt |
| 47 | 1-603414 | 1 | Spring-Extension |
| 48 | 112-3973 | 1 | Hook-Return, Spring |
| 49 | 108-7895 | 1 | Deflector |
| 50 | 110-6694 | 1 | Spring-Torsion |
| 52 | 112-3977 | 3 | Bolt-Shoulder |
| 56 | 117-1223 | 1 | Decal |
| 57 | 32144-1 | 6 | Screw-Taptite |
| 65 | 323-7 | 1 | Screw-HH |
| 66 | 322-3 | 2 | Screw-HH |
| 67 | 3296-59 | 1 | Nut-Lock, NI |
| 68 | 322-2 | 1 | Screw-HH |
| 88 | 3230-23 | 1 | Screw-CARR |

# 50 Inch Deck Decal Assembly No. 131-3606

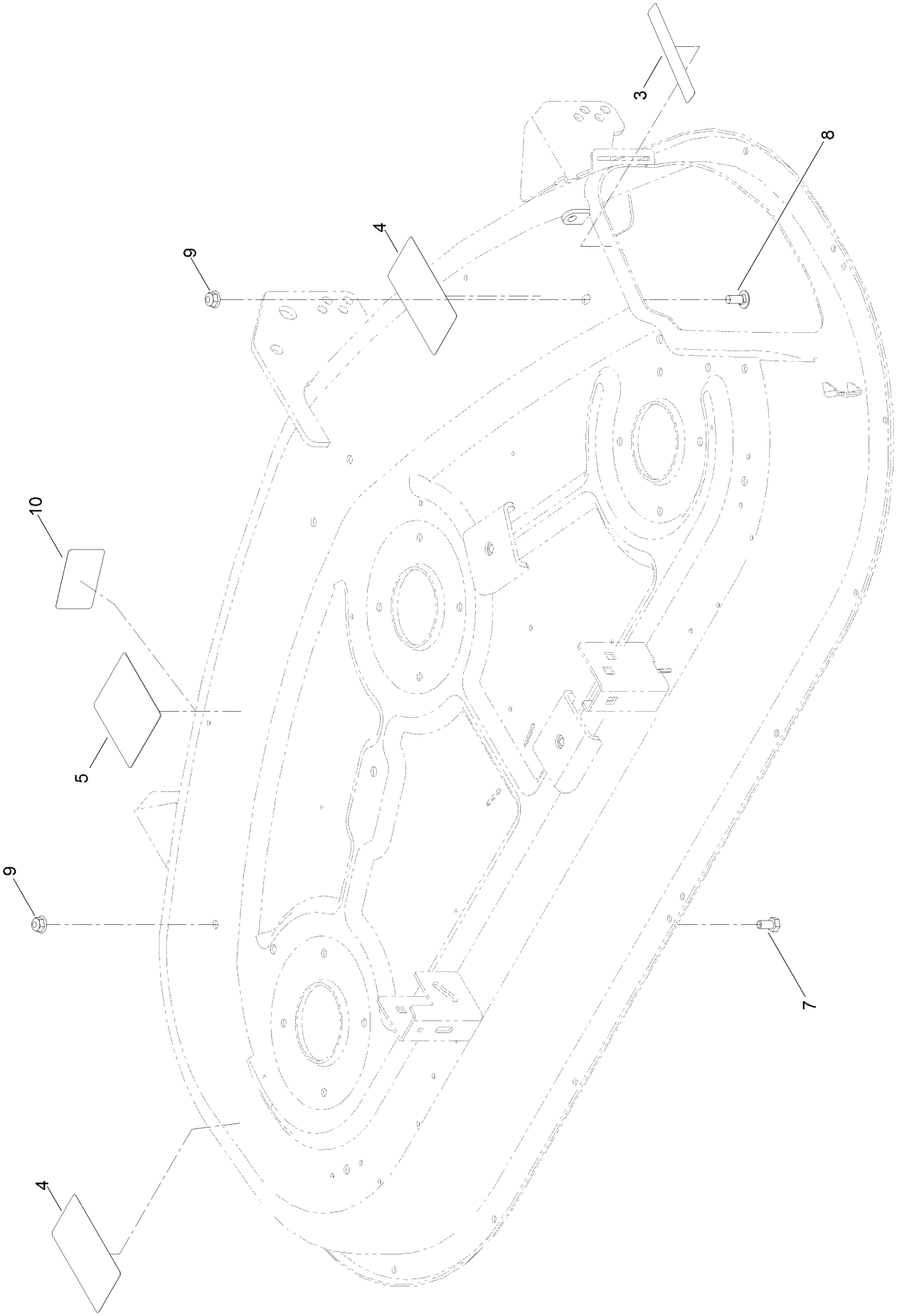

# 50 Inch Deck Decal Assembly No. 131-3606 (continued)

| Ref. | Part Number | Qty. | Description |
|---|---|---|---|
| 3 | 93-7009 | 1 | Decal-Danger |
| 4 | 132-0872 | 2 | Decal-Danger, Deck |
| 5 | 99-3943 | 1 | Decal-Routing, Belt |
| 7 | 322-2 | 1 | Screw-HH |
| 8 | 3230-23 | 1 | Screw-CARR |
| 9 | 104-8300 | 2 | Nut-HF, NI |
| 10 | 112-9840 | 1 | Decal-Scalp, Anti |

# Model Specific Decal Assembly

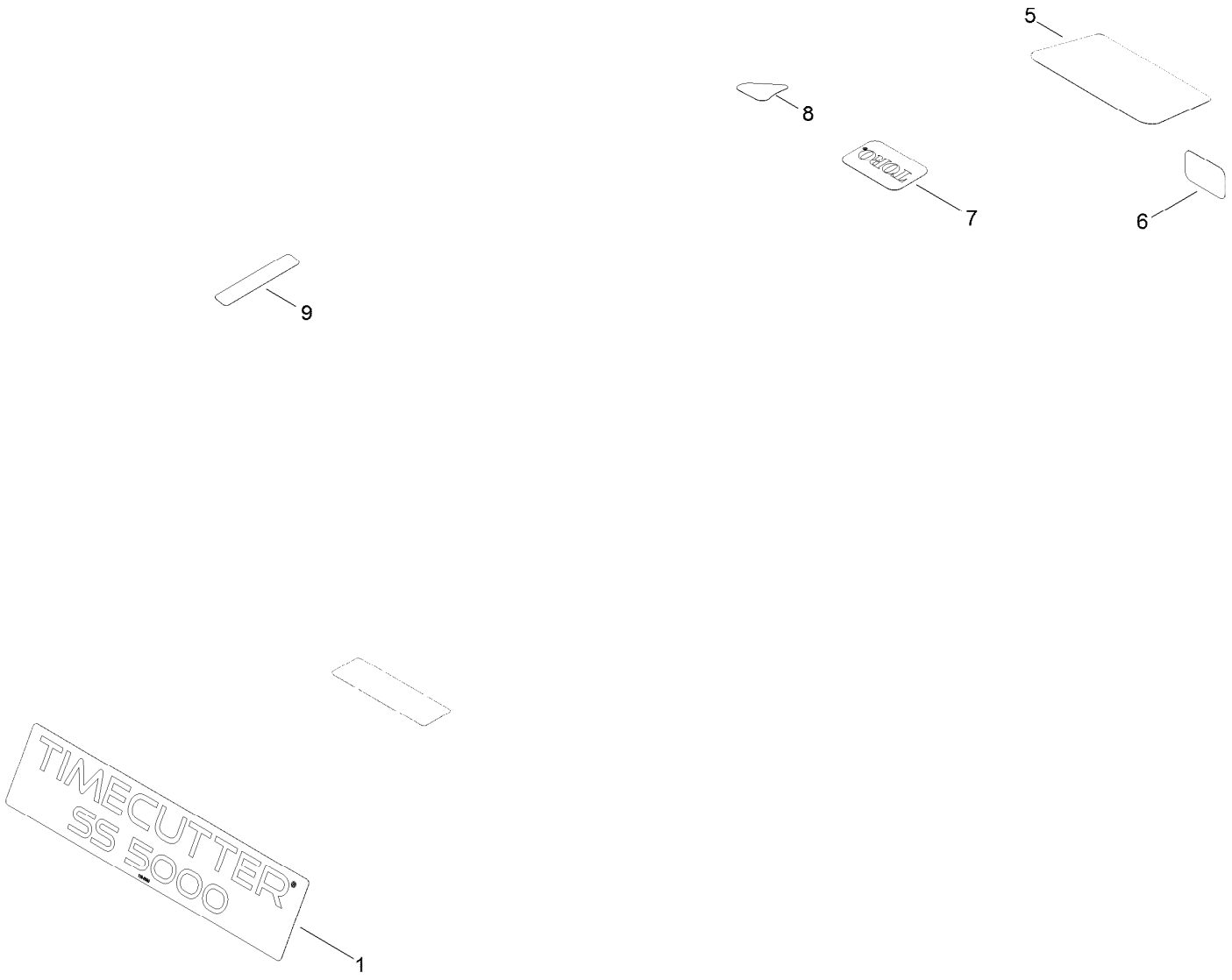

# Model Specific Decal Assembly (continued)

| Ref. | Part Number | Qty. | Description |
|---|---|---|---|
| 1 | 119-8903 | 1 | Decal-Timecutter |
| 5 | 136-5597 | 1 | Decal-Engine |
| 6 | 127-9076 | 1 | Placard-Intake |
| 7 | 131-4157 | 1 | Decal |
| 8 | 131-1097 | 1 | Decal-Drain, Oil |
| 9 | 132-0904 | 1 | Decal-Shutdown |

# Frame Decal Assembly

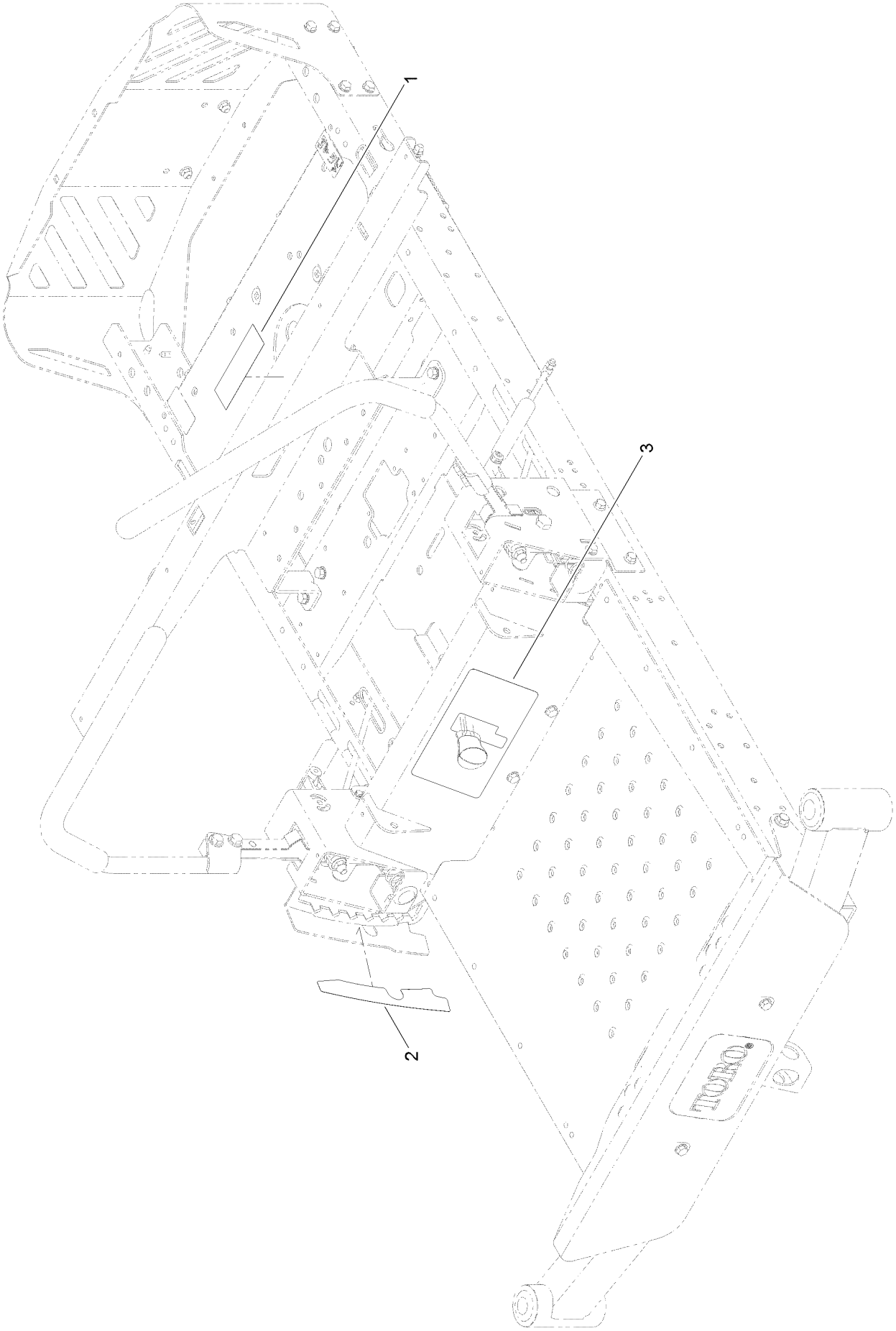

# Frame Decal Assembly (continued)

| Ref. | Part Number | Qty. | Description |
|---|---|---|---|
| 1 | 106-8717 | 1 | Decal-Service, CE |
| 2 | 119-8870 | 1 | Decal-HOC |
| 3 | 131-3947 | 1 | Decal-Control, Speed |

# Clutch Assembly

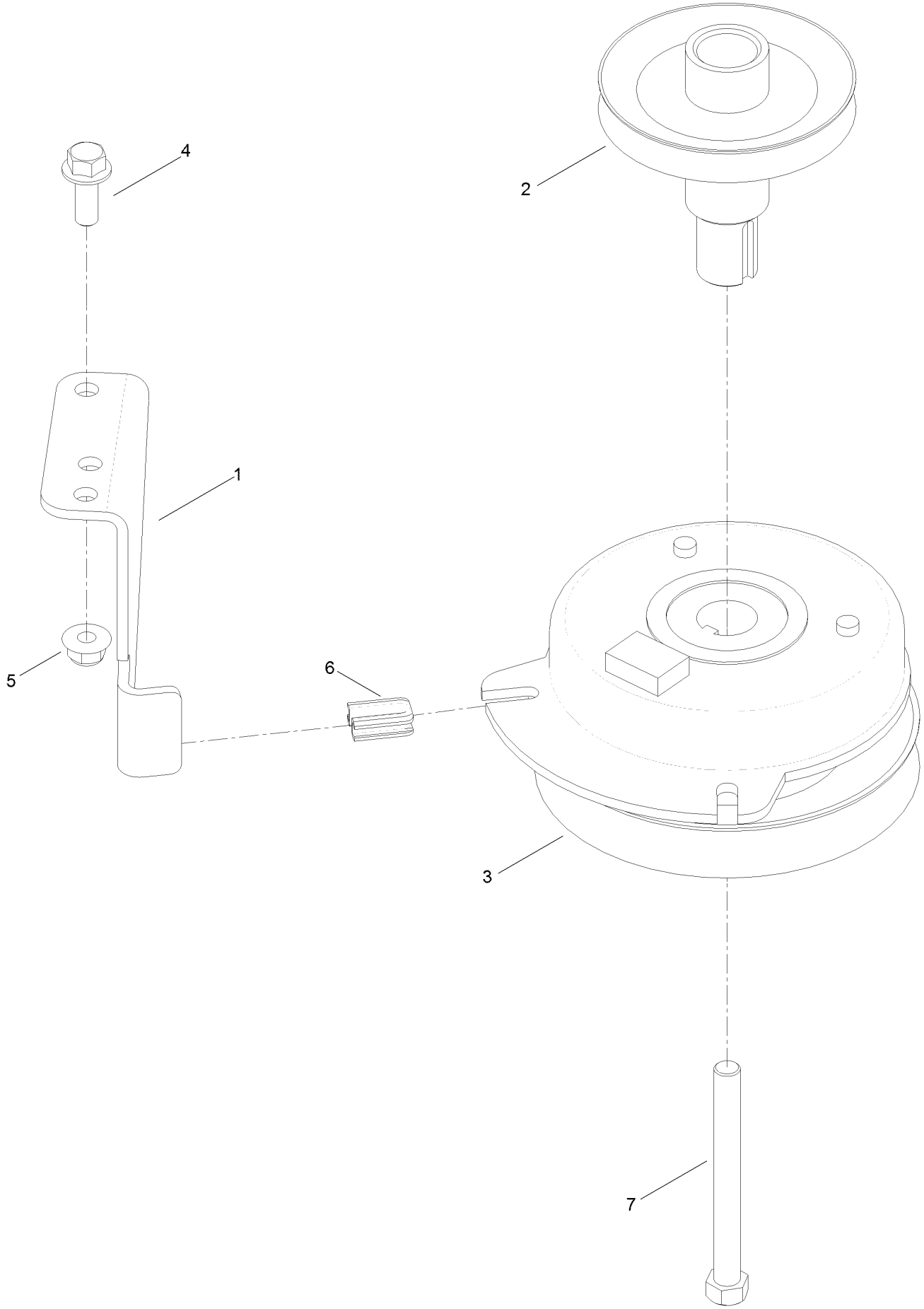

# Clutch Assembly (continued)

| Ref. | Part Number | Qty. | Description |
|---|---|---|---|
| 1 | 137-7000 | 1 | Stop-Clutch (Wide) |
| 2 | 130-6854 | 1 | Pulley-Engine |
| 3 | 127-3408 | 1 | Clutch-PTO |
| 4 | 3234-42 | 1 | Screw-HHF |
| 5 | 104-8301 | 1 | Nut-HF, NI |
| 6 | 120-2217 | 1 | Isolator-Clutch |
| 7 | 3212-17 | 1 | Screw-HH |

# Attachments and Accessories

## For 74731 TimeCutter SS 5000 Riding Mower

| Product Name | Model/Part |
|---|---|
| Arm Rest Kit | 110-5719 |
| Deck Ring Kit | 114-1608 |
| Hourmeter Kit | 116-5461 |
| All Season Synthetic Oil (10W30, QT) | 117-0066 |
| Seat Cover W/O Arm Rest - TC 18in | 117-0096 |
| Striping Kit | 120-7905 |
| Jack Mount Kit | 126-5251 |
| Jack Kit | 127-6666 |
| Fuel Stabilizer .05 oz | 130-2393 |
| 4-Cycle Fuel, Snow And Lawn 32oz Can | 131-3823 |
| Attachment Mount Kit | 131-3966 |
| Toro Premium Fuel Treatment 12 Oz Bottle | 131-6572 |
| Weight Kit | 131-7658 |
| Deluxe Seat Kit | 131-7699 |
| Toro V-Twin Engine Maintenance Kit | 132-4878 |
| Floor Mat Kit | 132-6921 |
| Maintenance Kit Toro V-twin Hd Engine | 136-7847 |
| HD Air Cleaner Kit | 136-7860 |
| Pro-Control Damper Kit | 138-7588 |
| 10w30 4-cycle Engine Oil (32oz Bottle) | 38280 |
| Toro 4-cycle SAE 30 Oil (32oz Bottle) | 38903 |
| Storage Cover | 490-7516 |
| Foot Assist Deck Lift Kit, 2011 and After Zero-Turn-Radius Riding Mower | 79010 |
| Sunshade Kit | 79011 |
| Blade Kit | 79016P |
| 50in Recycler Kit, 2007 and After Riding Mower | 79019 |
| Assist Handle and Step Kit | 79339 |
| 50in and 54in Bagger | 79392 |

**Notes:**

TORO®

Count on it.