Form No. 3423-543 Rev A

TORO®

Count on it.

Parts Catalog

22in Recycler®

Lawn Mower

Model No. 20337HD—Serial No. 404320000 and Up

Register at www.Toro.com.
Original Instructions (EN)

3423-543 A

Ordering Replacement Parts

To order replacement parts, please supply the part number, the quantity, and the description of each part desired.

Understanding Reference Numbers

Each identified part in an illustration has a reference number. The reference number for a part also appears in the parts list, along with other information about the part.

This catalog uses two special reference number formats, one to indicate parts in a service assembly and another to indicate the quantity of a given part in an illustration.

Service Assembly Reference Numbers

Parts in service assemblies have reference numbers in the form a:b. The a represents the reference number of the entire service assembly and the b represents a sequential number unique to each part within the service assembly.

For example, a wheel assembly might be identified by reference number 6, the tire by 6:1, the valve by 6:2, and the wheel by 6:3. When you order the assembly identified by reference number 6, you receive all parts identified by reference numbers 6:1,6:2, and 6:3. However, you may also order any part individually. Reference numbers of this type appear in illustration and in parts lists.

Reference Numbers Indicating Quantity

In an illustration, if a reference number indicates more than one part, the reference number has the form nX y. The n represents the quantity of the part, the X is the multiplication symbol, and the y represents the reference number.

For example, in an illustration, the reference number 2X 37 means that two of the parts identified by reference number 37 are indicated.

Contents

Deck, Side Chute and Rear Door Assembly 4
Rear Bag Assembly 6
Engine and Blade Assembly 8
Front Wheel and Height-of-Cut Assembly 10
Rear Wheel and Height-of-Cut Assembly 12
Handle Assembly 14
Attachments and Accessories 16

© 2019—The Toro® Company
8111 Lyndale Avenue South
Bloomington, MN 55420

Contact us at www.Toro.com.
Printed in the USA.
All Rights Reserved

Deck, Side Chute and Rear Door Assembly

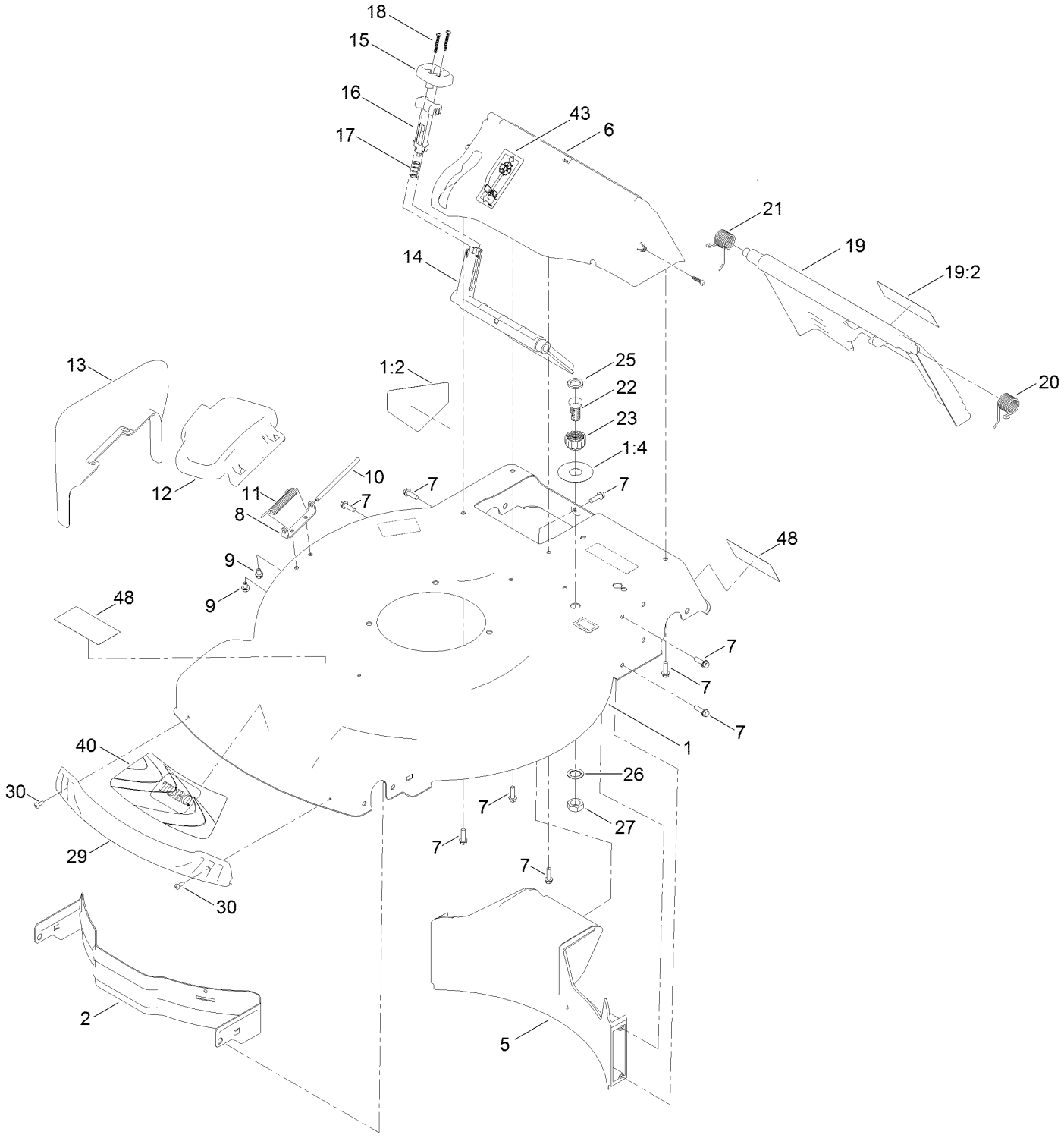

Deck, Side Chute and Rear Door Assembly (continued)

Ref.	Part Number	Qty.	Description
1	130-2389	1	Housing ASM
1:2	94-8072	1	Decal-Danger
1:4	137-9196	1	Decal-Quick Wash
2	114-7963-01	1	Baffle-Front
5	139-8982	1	Baffle-Rear
6	136-5882	1	Chute-Recycle
7	46-8091	9	Screw-HWH
8	112-6416	1	Bracket-Cover
9	99-8445	2	Screw-HWH
10	99-5291	1	Rod-Cover
11	99-5293	1	Spring-Torsion
12	115-8449	1	Deflector-Side
13	115-8447	1	Chute-Discharge, Side
14	114-7960	1	Deflector-Recycle
15	114-7958	1	Knob-Recycle
16	114-7959	1	Latch-Recycle
17	117-1031	1	Spring-Compression
18	32104-120	2	Screw-PPH
19	137-9139	1	Rear Door ASM
19:2	131-4514	1	Decal-Warning
20	115-2859	1	Spring-Torsion
21	114-7924	1	Spring-Torsion
22	112-6400	1	Port-Washout
23	112-6401	1	Coupling-Hose, Washout Port
25	112-6438	1	Washer-Seal, Washout Port
26	3254-5	1	Washer-Lock
27	3218-6	1	Nut-Jam
29	114-7987	1	Bumper
30	105-6849	2	Screw-Forming, Thread
40	115-4676	1	Decal-Recycler
43	125-5026	1	Decal
48	139-0451	2	Decal-Tool, Thd

Rear Bag Assembly

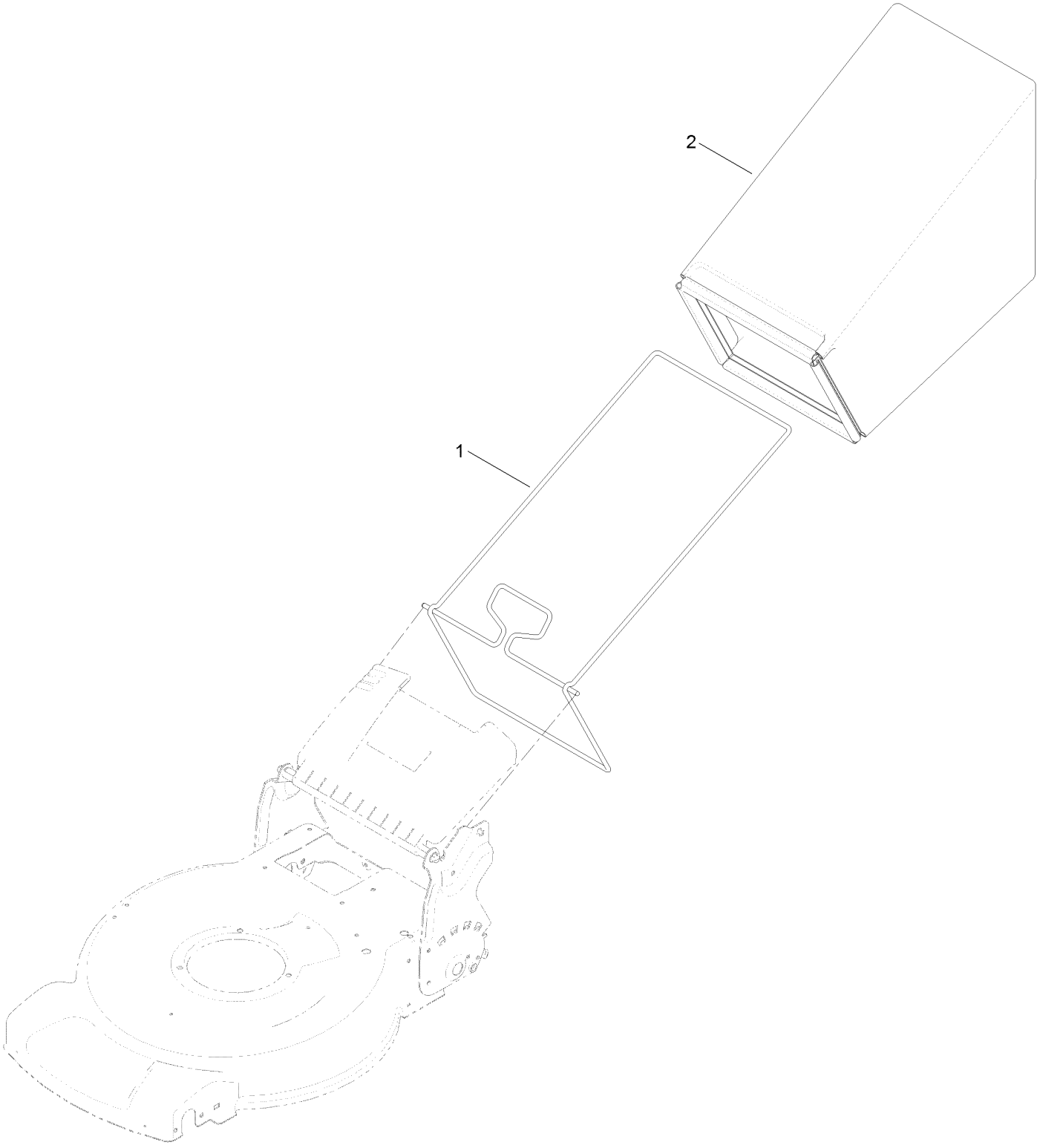

Rear Bag Assembly (continued)

Ref.	*Part Number*	*Qty.*	*Description*
1	132-4529-03	1	Bag Frame ASM
2	115-4673	1	Grass Bag ASM

Engine and Blade Assembly

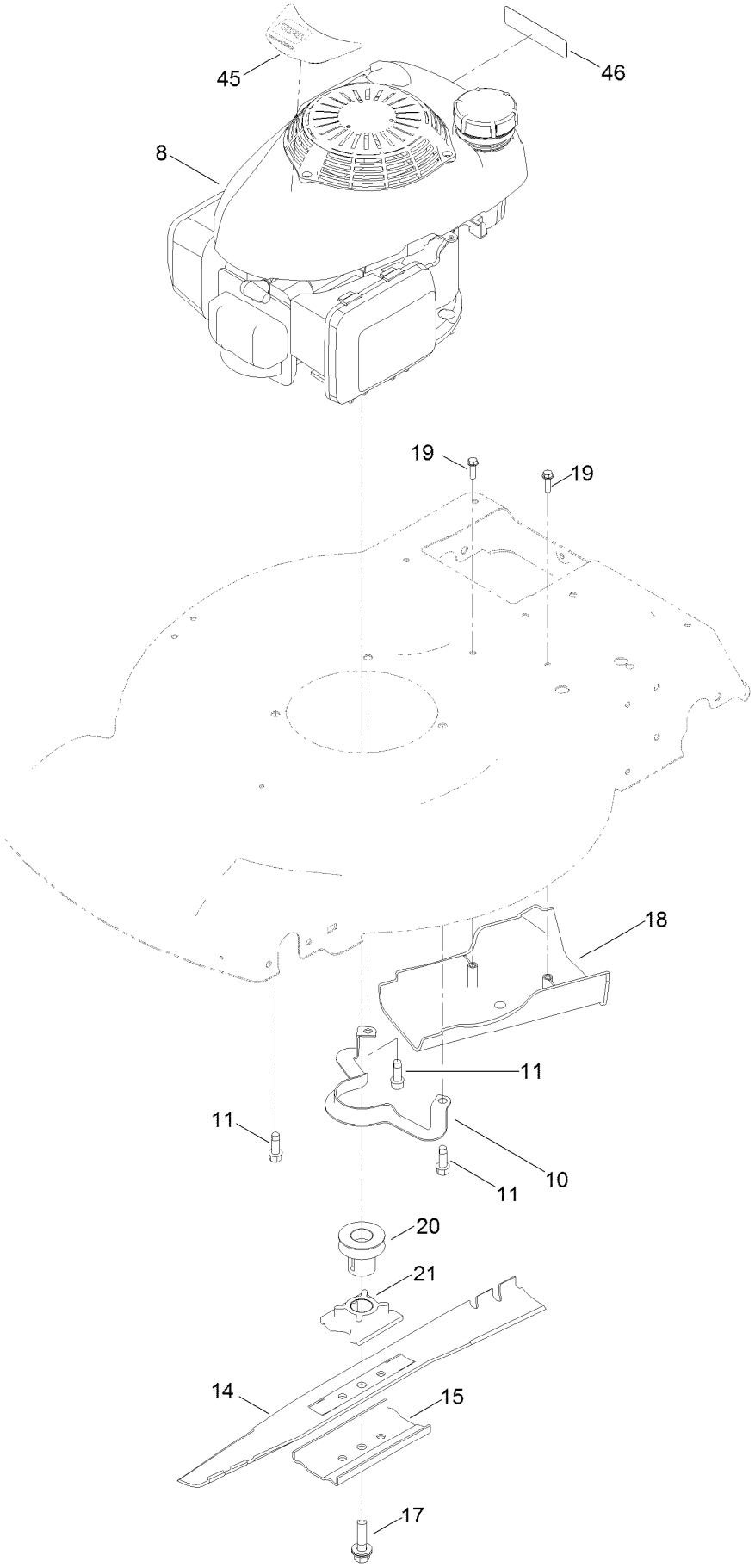

Engine and Blade Assembly (continued)

Ref.	Part Number	Qty.	Description
8		1	Engine-Honda, Gcv160La0 S3B ●■
10	105-3030-03	1	Guide-Belt
11	95-1726	3	Screw-Taptite
14	131-4547-03	1	Blade-22 Inch
15	108-3766-03	1	Support-Blade
17	117-5270	1	Bolt-Blade
18	114-7937	1	Cover-Belt
19	46-8091	2	Screw-HWH
20	130-6684	1	Pulley
21	130-6674	1	Retainer-Blade
45	131-0854	1	Decal-Shroud, Honda
46	133-8062	1	Decal-Arrestor, Spark

● Not serviced separately

■ Obtain parts from www.honda-engines.com

Front Wheel and Height-of-Cut Assembly

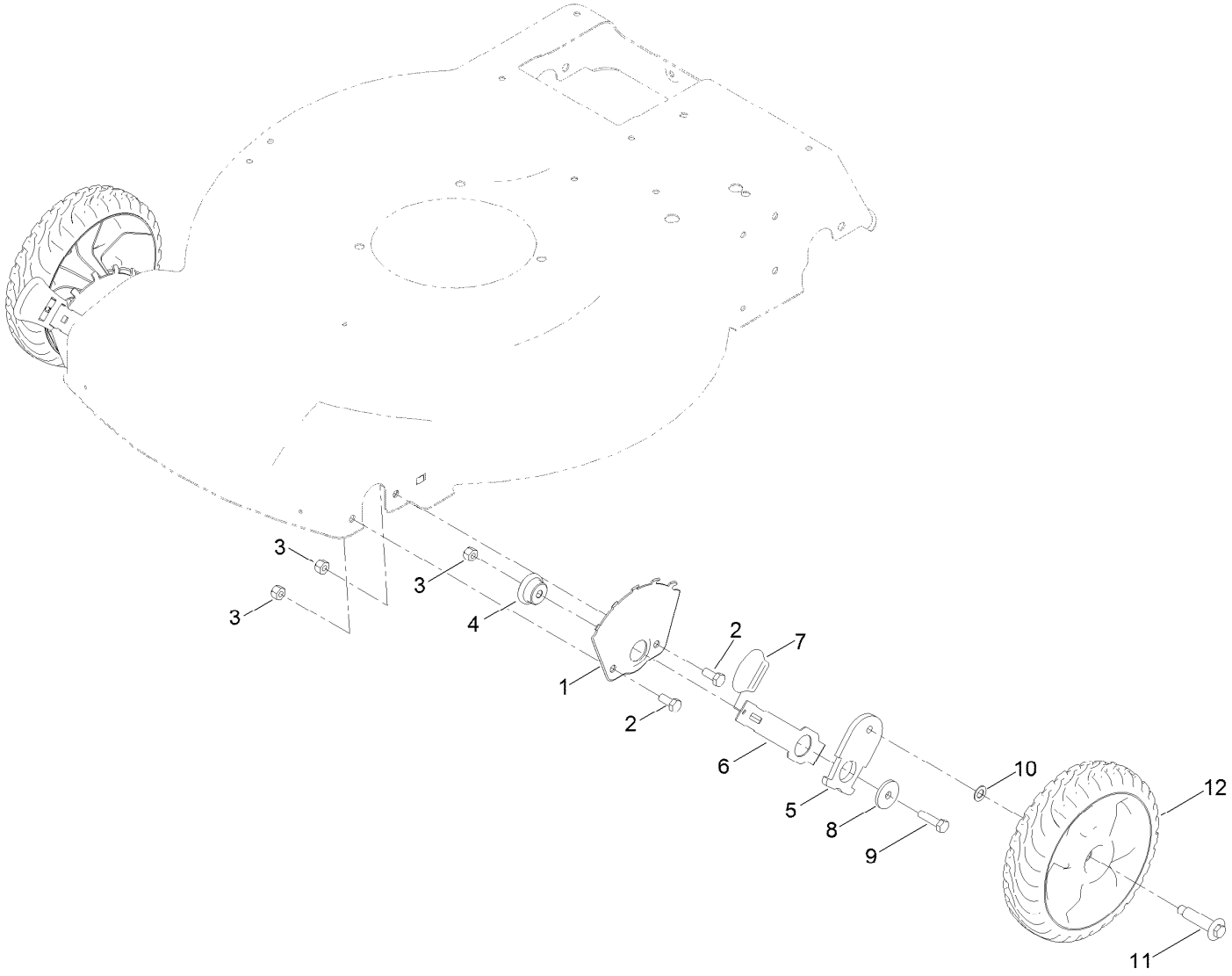

Front Wheel and Height-of-Cut Assembly (continued)

Ref.	Part Number	Qty.	Description
1	115-1956-03	2	Plate-HOC, Front
2	322-3	4	Screw-HH
3	3296-29	6	Nut-Lock, NI
4	105-1818	2	Bushing-Mount, HOC
5	137-9128	2	Arm-Pivot, Front
6	105-1809	2	Arm-Spring
7	110-0549	2	Knob-HOC
8	105-3048	2	Washer-Flat
9	322-6	2	Screw-HH
10	40-1940	2	Washer
11	614650	2	Bolt-Shoulder
12	137-4833	2	8In Wheel ASM

Rear Wheel and Height-of-Cut Assembly

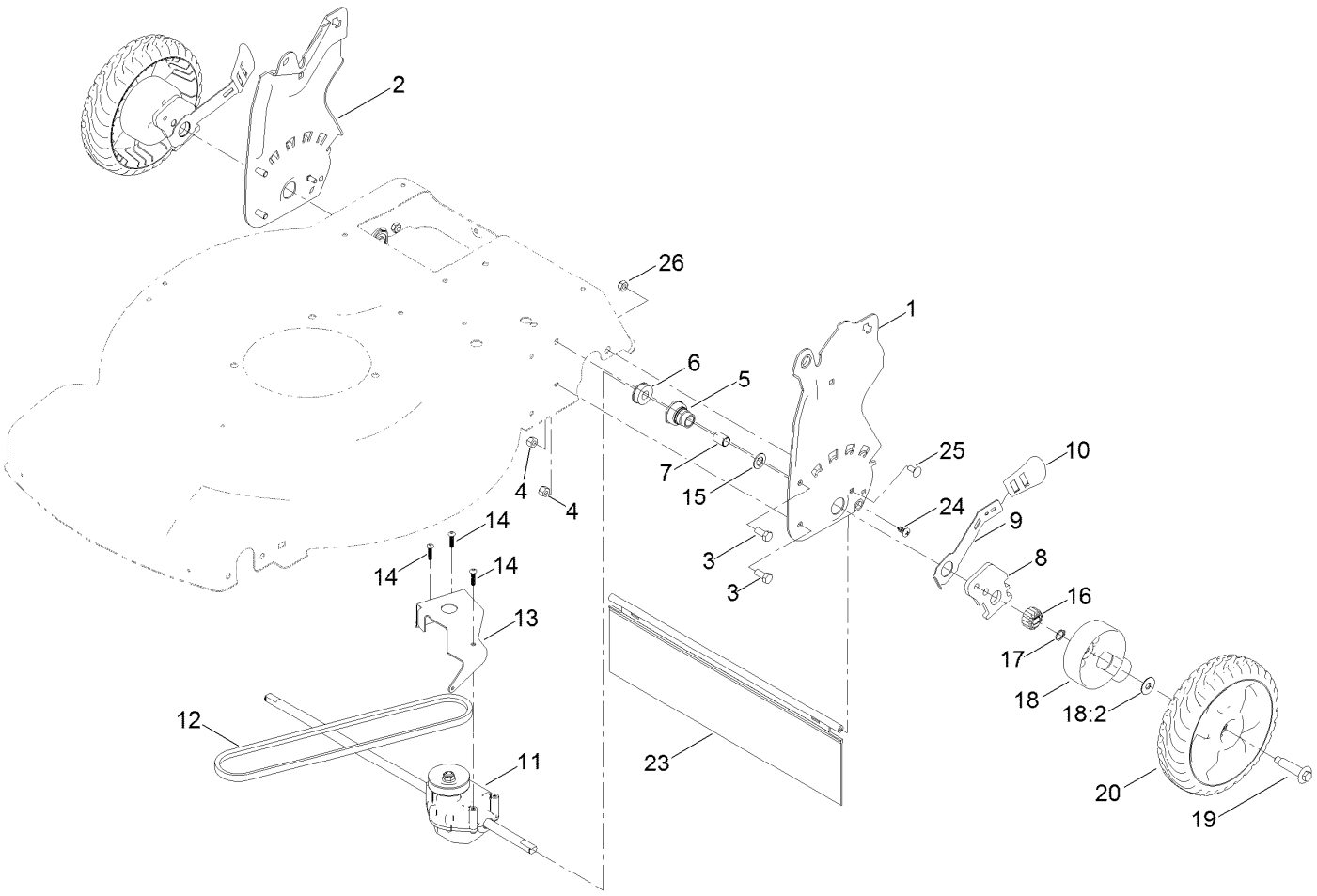

Rear Wheel and Height-of-Cut Assembly (continued)

Ref.	Part Number	Qty.	Description
1	131-9693-03	1	Plate-HOC, LH
2	131-9694-03	1	Plate-HOC, RH
3	322-3	4	Screw-HH
4	3296-29	4	Nut-Lock, NI
5	108-9779	2	Retainer-Bushing, HOC
6	104-8699	2	Bearing-Ball
7	108-9782	2	Bushing-Sleeve
8	136-9090	2	Arm-Pivot, Rear
9	108-9780	2	Arm-Spring
10	110-0549	2	Knob-HOC
11	121-9178	1	Transmission ASM
12	115-4669	1	Belt-V
13	114-7977-03	1	Bracket-Transmission
14	108-7476	3	Screw-Plastite
15	110-7191	2	Washer-Thrust
16	131-5399	2	Gear-Pinion, 15T
17	32151-61	2	Ring-Retaining
18	136-9059	2	Gear Cover ASM
18:2	614426	1	Washer-Stepped
19	614650	2	Bolt-Shoulder
20	137-4835	2	Wheel Gear ASM, 8In
23	120-7012	1	Shield-Trailing
24	117-1092	2	Screw-PTH
25	100-1445	2	Bolt-CARR
26	3296-16	2	Nut-Lock, NI

Handle Assembly

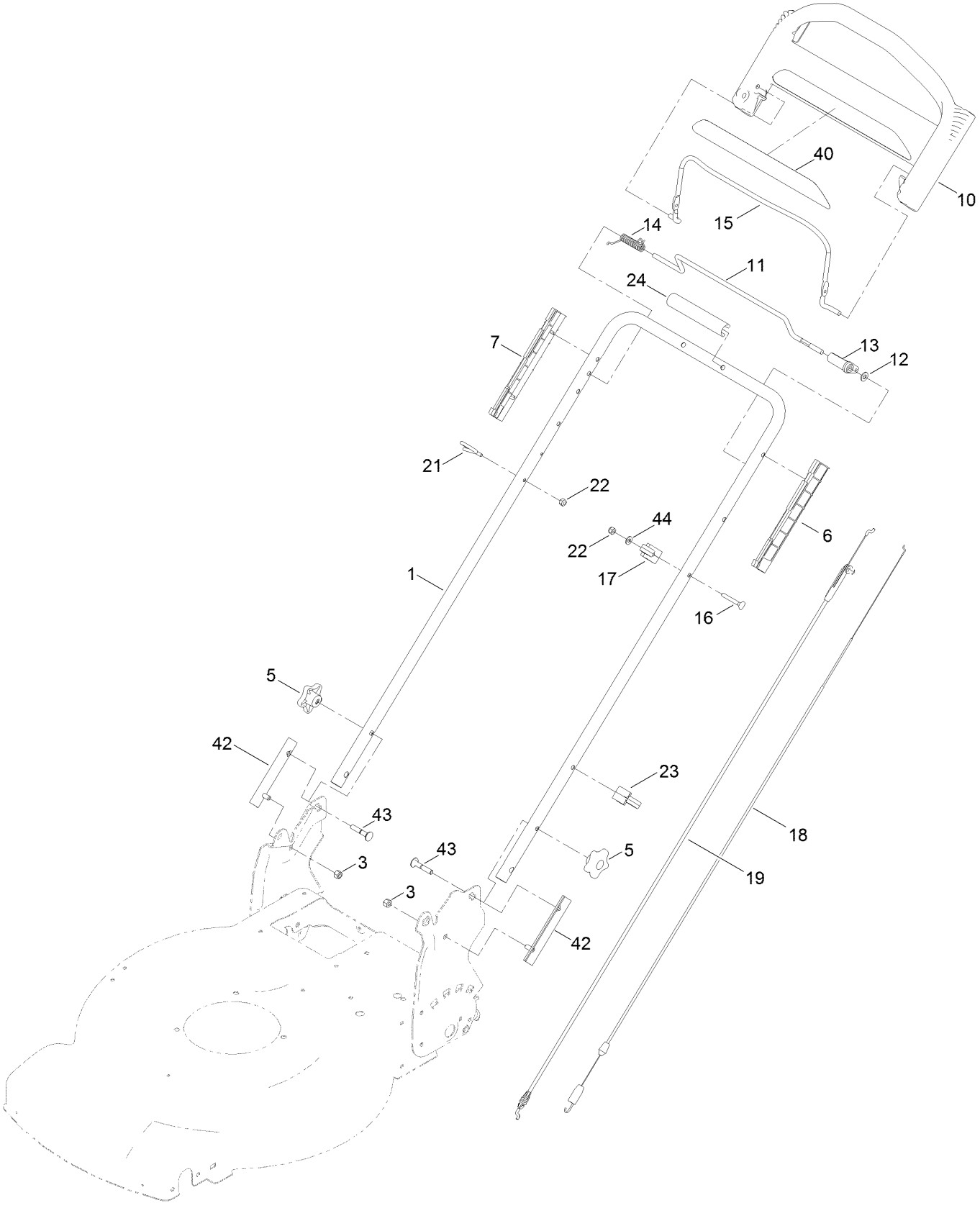

Handle Assembly (continued)

Ref.	Part Number	Qty.	Description
1	131-9695-05	1	Handle
3	3296-29	2	Nut-Lock, NI
5	117-5976	2	Knob-Handle
6	105-6842	1	Guide-LH
7	105-6841	1	Guide-RH
10	104-8678	1	Handle-Control
11	136-7150	1	Bar-Control, Traction
12	3256-23	1	Washer-Plain
13	99-1589	1	Lever-Traction
14	136-7166	1	Spring-Torsion
15	131-0880-03	1	Bail-Brake
16	95-4453	1	Screw
17	136-5864	1	Anchor-Cable
18	115-8435	1	Cable-Traction
19	131-4530	1	Cable-Brake
21	86-9671	1	Guide-Rope
22	3296-73	2	Nut-Lock, NI
23	114-7988	1	Guide-Cable
24	131-4551	1	Cover-Handle
40	117-1019	1	Decal
42	137-0674	2	Saddle-Handle
43	137-0654	2	Screw-CARR
44	3256-1	1	Washer-Flat

Attachments and Accessories

For 20337HD 22in Recycler Lawn Mower

Product Name	Model/Part
All Season Synthetic Oil (10W30, QT)	117-0066
Fuel Stabilizer .05 oz	130-2393
WPM Maintenance Kit, 2014 and Newer	130-8134
4-Cycle Fuel, Snow And Lawn 32oz Can	131-3823
Traction Assist Handle Kit	131-4590
Toro Premium Fuel Treatment 12 Oz Bottle	131-6572
8 Inch Wheel ASM	137-4833P
Lawn Striping Kit with 22in Roller	20601
Toro 4-Cycle SAE 30 Oil (32oz Bottle)	38903
Summer Oil-Case of 24 (20oz Bottles)	38916
Replacement Drive Belt Kit, 22-inch 2009 and After Rear-Wheel Drive Lawn Mower	38991
Bag-Walk Behind (Toro)	490-7318
Lawnmower Cover	490-7462
Replacement Bag	59310
8 Inch Gear Wheel RWD ASM	59503
22 Inch Atomic Blade	59534P

Notes:

Notes:

Notes:



Count on it.