FORM NO. 3321–870

TORO®

Wheel Horse®
8–25
Recycler® Rider

Model No. 70044 – 9900001 & Up

Operator's Manual

IMPORTANT: Read this manual carefully. It contains information about your safety and the safety of others. Also become familiar with the controls and their proper use before you operate the product.

Introduction

Thank you for purchasing a Toro product.

All of us at Toro want you to be completely satisfied with your new product, so feel free to contact your local Authorized Service Dealer for help with service, genuine replacement parts, or other information you may require.

Whenever you contact your Authorized Service Dealer or the factory, always know the model and serial numbers of your product. These numbers will help the Service Dealer or Service Representative provide exact information about your specific product. You will find the model and serial number plate located in a unique place on the product as shown below.

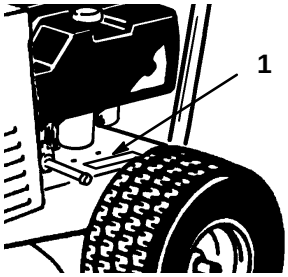

1. Model and Serial Number Plate (on left frame)

For your convenience, write the product model and serial numbers in the space below.

Model No: _____

Serial No. _____

Read this manual carefully to learn how to operate and maintain your product correctly. Reading this manual will help you and others avoid personal injury and damage to the product. Although we design, produce and market safe, state-of-the-art products, you are responsible for using the product properly and safely. You are also responsible for training persons, who you allow to use the product, about safe operation.

The warning system in this manual identifies potential hazards and has special safety messages that help you and others avoid personal injury, even death. DANGER, WARNING and CAUTION are signal words used to identify the level of hazard. However, regardless of the hazard, be extremely careful.

DANGER signals an extreme hazard that will cause serious injury or death if the recommended precautions are not followed.

WARNING signals a hazard that may cause serious injury or death if the recommended precautions are not followed.

CAUTION signals a hazard that may cause minor or moderate injury if the recommended precautions are not followed.

Two other words are also used to highlight information. “Important” calls attention to special mechanical information and “Note” emphasizes general information worthy of special attention.

The left and right side of the machine is determined by sitting on the seat in the normal operator’s position.

⚠ WARNING: ⚠

The engine exhaust from this product contains chemicals known to the State of California to cause cancer, birth defects, or other reproductive harm.

IMPORTANT: The engine in this product is not equipped with a spark arrester muffler. It is a violation of California Public Resource Code Section 4442 to use or operate this engine on any forest–covered, brush–covered or grass–covered land as defined in CPRC 4126. Other states or federal areas may have similar laws.

©The Toro Comany – 1998
All Rights Reserved

Contents

	Page
Safety	3
Safe Operating Practices	3
Slope Chart	7
Safety and Instruction Decals	9
Gasoline and Oil	10
Recommended Gasoline	10
Stabilizer/Conditioner	11
Filling the Fuel Tank	11
Check Engine Oil Level	11
Assembly	12
Loose Parts	12
Install Steering Wheel	13
Install Seat	13
Activate the Battery	14
Fill Crankcase with Oil	15
Check Tire Pressure	15
Operation	16
Think Safety First	16
Controls	16
Gear Shift	16
Deck Engagement Lever (Power take off [PTO])	16
Throttle Control	16
Key Choice	16
Ignition Switch	16
Height–of–Cut Control	16
Clutch Pedal	17
Brake Pedal	17
Parking Brake	17
Starting and Stopping the Engine	17
Break–In	18
Adjusting Height–of–Cut	18
Operating Procedure	18
The Safety Interlock System	19
Operating–In–Reverse	19
Side Discharging or Bagging	22
Driving Forward or Backward	22
Stopping the Machine	23
Positioning the Seat	23
Recycler Rider Tips	24
Tips for Cutting Grass	24
Tips For Cutting Leaves	26
Maintenance	27
Service Interval Chart	27
Air Cleaner	28
Engine Oil	29
Changing/Draining Oil	29
Spark Plug	30
Greasing and Lubrication	31
Tire Pressure	32
Brake	33
Fuel Tank	34
Battery	34
Servicing Cutter Blade	36
Removing/Installing Cutting Unit	37
Replacing Blade Drive Belt	38
Checking/Adjusting Drive Chain	41
Wiring Diagram	43
Cleaning and Storage	44
Washing Underside of Mower	45
Troubleshooting	46
Warranty	Back Cover

The enclosed Engine Owner's Manual is supplied for information regarding The U.S. Environmental Protection Agency (EPA) and the California Emission Control Regulation of emission systems, maintenance and warranty.

Keep this engine Owner's Manual with your unit. Should this engine Owner's Manual become damaged or illegible, replace immediately. Replacements may be ordered through the engine manufacturer.

Safety

This machine meets or exceeds the B71.1–1996 specifications of the American National Standards Institute, in effect at the time of production. However, improper use or maintenance by the operator or owner can result in injury. To reduce the potential for injury, comply with these safety instructions and always pay attention to the safety alert ⚠ symbol, which means CAUTION, WARNING, or DANGER—"personal safety instruction." Failure to comply with the instruction may result in personal injury or death.

Safe Operating Practices

This product is capable of amputating hands and feet and throwing objects. Always follow all safety instructions to avoid serious injury or death.

⚠ WARNING

POTENTIAL HAZARD

- **Engine exhaust contains carbon monoxide, which is an odorless, deadly poison.**

WHAT CAN HAPPEN

- **Carbon monoxide can kill you and is also known to the State of California to cause birth defects.**

HOW TO AVOID THE HAZARD

- **Do not run engine indoors or in an enclosed area.**

General Operation

1. Read, understand, and follow all instructions in the operator's manual and on the machine before starting.
2. Allow only responsible adults who are familiar with the instructions to operate the machine.
3. Clear the area of objects such as rocks, toys, wire, etc., which could be picked up and thrown by the blade.
4. Be sure the area is clear of other people before mowing. Stop the machine if anyone enters the area.
5. Never carry passengers.
6. Do not mow in reverse unless absolutely necessary. Always look down and behind before and while backing.
7. Be aware of the mower discharge direction and do not point it at anyone. Do not operate the mower without either the entire grass catcher or the guard in place.
8. Slow down before turning. Sharp turns on any terrain may cause loss of control.
9. Never leave a running machine unattended. Always turn off blades, set parking brake, stop engine, and remove key before dismounting.
10. Turn off blades when not mowing.
11. Keep hands, feet, hair and loose clothing away from attachment discharge area, underside of mower and any moving parts while engine is running.
12. Stop the engine before removing the grass catcher or unclogging the chute.
13. Mow only in daylight or good artificial light.

14. Do not operate the machine while under the influence of alcohol or drugs.

15. Watch for traffic when operating near or crossing roadways.

16. Use extra care when loading or unloading the machine onto a trailer or truck.

17. Do not touch equipment or attachment parts which may be hot from operation. Allow to cool before attempting to maintain, adjust or service.

Slope Operation

Slopes are a major factor related to loss-of-control and tip-over accidents, which can result in severe injury or death. All slopes require extra caution. If you cannot back up the slope or if you feel uneasy on it, do not mow it.

DO

- Mow up and down slopes greater than 5°, not across.
- Mow downhill only on slopes above 10°, never mow uphill. If a steep slope must be ascended, back up the hill, and drive forward down the hill, keeping the machine in gear.
- Remove obstacles such as rocks, tree limbs, etc. from the mowing area. Watch for holes, ruts or bumps, as uneven terrain could overturn the machine. Tall grass can hide obstacles.
- Use slow speed. Choose a low gear so that you will not have to stop or shift while on the slope.
- Follow the manufacturer’s recommendations for wheel weight or counterweights to improve stability.
- Use extra care with grass catchers or other attachments. These can change the stability of the machine.
- Keep all movement on slopes slow and gradual. Do not make sudden changes in speed or direction.
- Avoid starting or stopping on a slope. If tires lose traction, disengage the blades and proceed slowly straight down the slope.

DO NOT

- Do not operate machine on hillsides or slopes exceeding 15°.
- Avoid turning on slopes. If you must turn, turn slowly and gradually downhill, if possible.
- Do not mow near drop-offs, ditches, or embankments. The machine could suddenly turn over if a wheel goes over the edge of a cliff or ditch, or if an edge caves in.
- Do not mow on wet grass. Reduced traction could cause sliding.
- Do not try to stabilize the machine by putting your foot on the ground.
- Do not use a grass catcher on steep slopes. Heavy grass bags could cause loss of control or overturn the machine.

Children

Tragic accidents can occur if the operator is not alert to the presence of children. Children are often attracted to the machine and the mowing activity. Never assume that children will remain where you last saw them. The following requirements must be followed to prevent injury to children.

1. Keep children out of the mowing area and under the watchful care of another responsible adult.

2. Be alert and turn the machine off if children enter the area.

3. Before and while backing, look behind and down for small children.

4. Never carry children. They may fall off and be seriously injured or interfere with safe machine operation.

5. Never allow children to operate the machine.

6. Use extra care when approaching blind corners, shrubs, trees, the end of a fence or other objects that may obscure vision.

Service

1. Stop the engine, disconnect spark plug wire(s) and remove key before performing any service, repairs, maintenance or adjustments.

2. Use extra care when handling gasoline and other fuels. They are flammable and vapors are explosive.

A. Use only an approved container.

B. Never remove the gas cap or add fuel when the engine is running. Allow the engine to cool before refueling. Do not smoke.

C. Never refuel the machine indoors.

D. Never store the machine or fuel container inside where there is an open flame, such as near a water heater or furnace.

3. Never run a machine inside a closed area.

4. Keep nuts and bolts tight, especially the blade attachment bolts. Keep equipment in good condition.

5. Never tamper with safety devices. Check safety systems for proper operation before each use.

6. Keep the machine free of grass, leaves, or other debris build-up. Clean up oil or fuel spillage. Allow the machine to cool before storing.

7. Stop and inspect the equipment if you strike an object. Repair, if necessary, before restarting.

8. Grass catcher components are subject to wear, damage and deterioration, which could expose moving parts or allow objects to be thrown. Frequently check components and replace with manufacturer’s recommended parts, when necessary.

9. Mower blades are sharp and can cut. Wrap the blade(s) or wear gloves, and use extra caution when servicing them.

10. Use only genuine replacement parts to ensure that original standards are maintained.

11. Check brake operation frequently. Adjust and service as required.

12. Battery acid is poisonous and can cause burns. Avoid contact with skin, eyes and clothing. Protect your face, eyes and clothing when working with a battery.

13. Battery gases can explode. Keep cigarettes, sparks and flames away from battery.

Slope Chart

Read all safety instructions on pages 3–5.

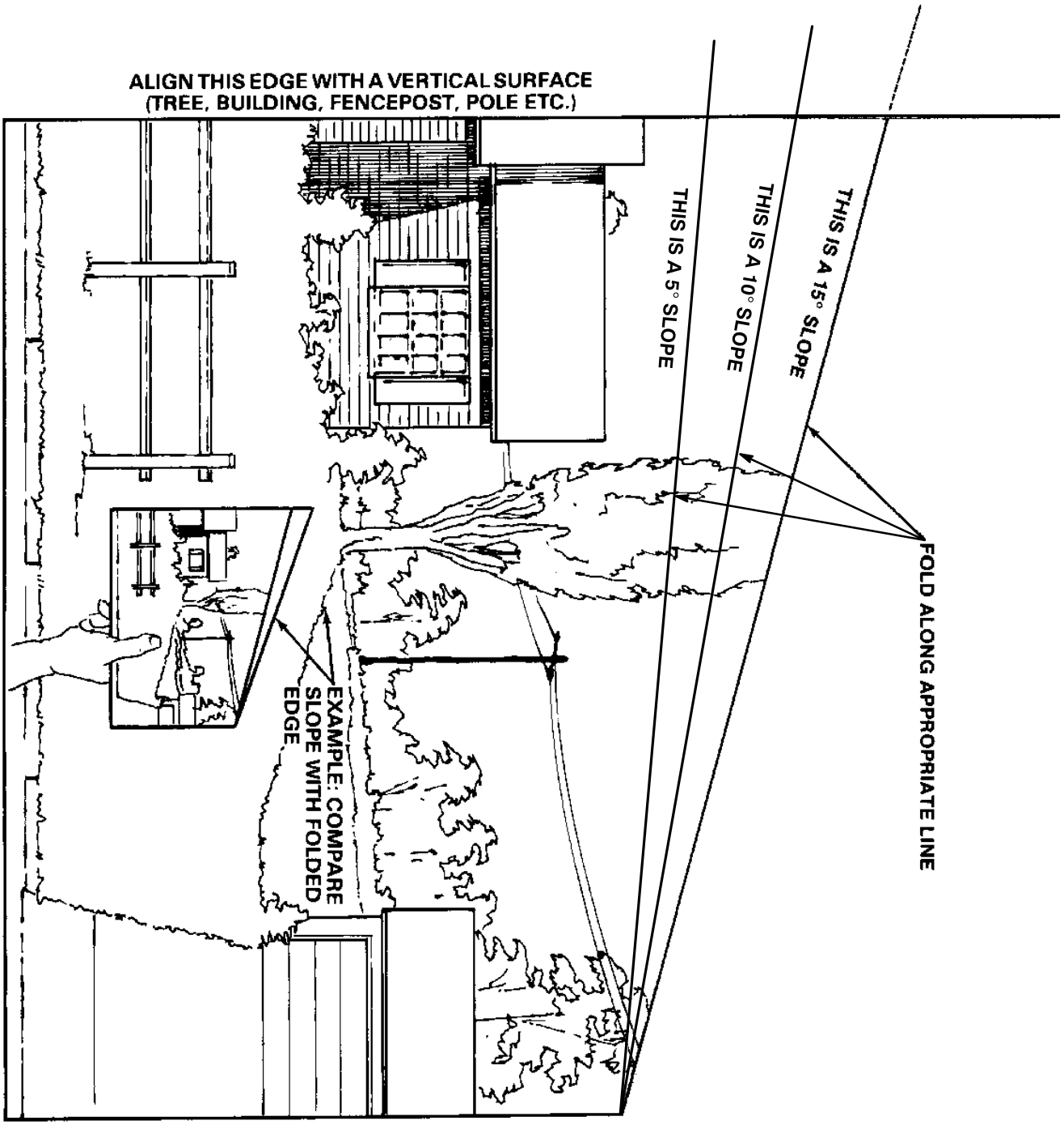

Safety and Instruction Decals

Safety decals and instructions are easily visible to the operator and are located near any area of potential danger. Replace any decal that is damaged or lost.

ON FRONT OF SEAT BODY
(Part No. 76–3920)

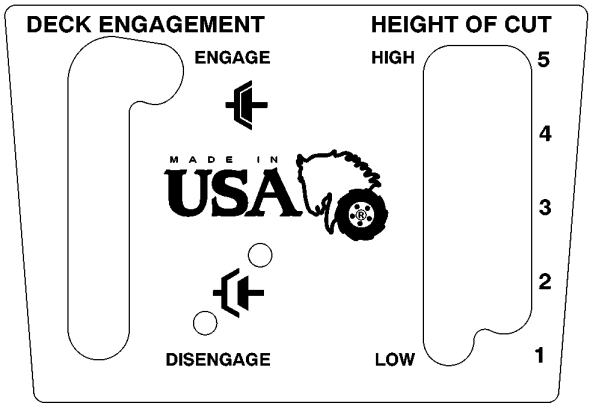

ON RIGHT SIDE OF SEAT BODY
(Part No. 67–1270)

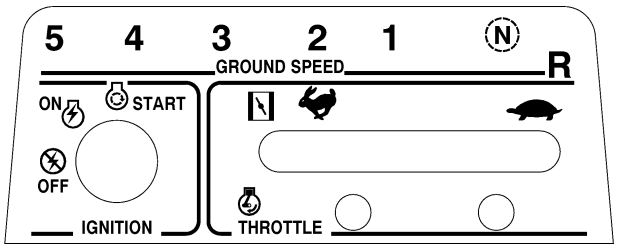

ON R.H. SIDE PANEL
(Part No. 99–2983)

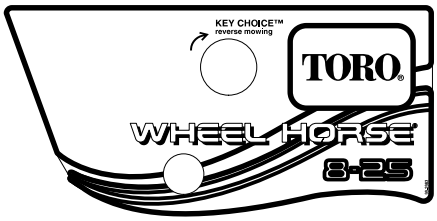

ON STEERING TOWER
(Part No. 99–2981)



ON DEFLECTOR
(Part No. 54-9220)



ON R.H. SIDE PANEL
(Part No. 99–2985)



ON CENTER CHANNEL
(Part No. 99–6096)

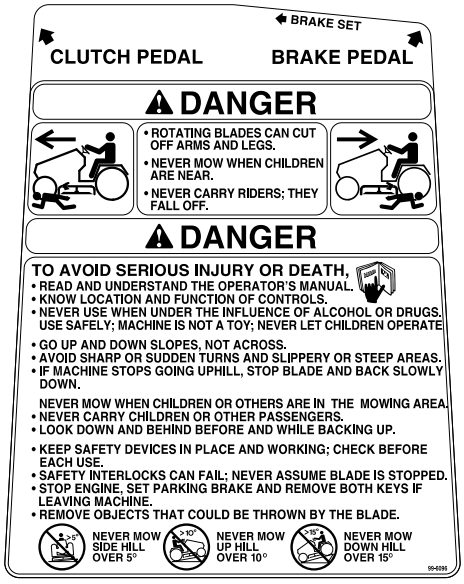

ON DECK
(Part No. 76–4070)



UNDER GRASS DEFLECTOR
(Part No. 68–3650)



Gasoline and Oil

Recommended Gasoline

Use UNLEADED Regular Gasoline suitable for automotive use (85 pump octane minimum). Leaded regular gasoline may be used if unleaded regular is not available.

IMPORTANT: Never use methanol, gasoline containing methanol, or gasohol containing more than 10% ethanol because the fuel system could be damaged. Do not mix oil with gasoline.

⚠ DANGER

POTENTIAL HAZARD

- **In certain conditions gasoline is extremely flammable and highly explosive.**

WHAT CAN HAPPEN

- **A fire or explosion from gasoline can burn you, others, and cause property damage.**

HOW TO AVOID THE HAZARD

- **Use a funnel and fill the fuel tank outdoors, in an open area, when the engine is cold. Wipe up any gasoline that spills.**
- **Do not fill the fuel tank completely full. Add gasoline to the fuel tank until the level is 1/4" to 1/2" (6 mm to 13 mm) below the bottom of the filler neck. This empty space in the tank allows gasoline to expand.**
- **Never smoke when handling gasoline, and stay away from an open flame or where gasoline fumes may be ignited by a spark.**
- **Store gasoline in an approved container and keep it out of the reach of children. Never buy more than a 30-day supply of gasoline.**

⚠ DANGER

POTENTIAL HAZARD

- **In certain conditions gasoline is extremely flammable and highly explosive.**

WHAT CAN HAPPEN

- **A fire or explosion from gasoline can burn you, others, and cause property damage.**

HOW TO AVOID THE HAZARD

- **Always place gasoline containers on the ground away from your vehicle before filling.**
- **Do not fill gasoline containers inside a vehicle or on a truck or trailer bed because interior carpets or plastic truck bed liners may insulate the container and slow the loss of any static charge.**
- **When practical, remove gas–powered equipment from the truck or trailer and refuel the equipment with its wheels on the ground.**
- **If this is not possible, then refuel such equipment on a truck or trailer from a portable container, rather than from a gasoline dispenser nozzle.**
- **If a gasoline dispenser nozzle must be used, keep the nozzle in contact with the rim of the fuel tank or container opening at all times until fueling is complete.**

Stabilizer/Conditioner

Add the correct amount of gas stabilizer/conditioner to the gas. Using a stabilizer/conditioner in the machine:

- Keeps gasoline fresh during storage of 90 days or less. For longer storage it is recommended that the fuel tank be drained.
- Cleans the engine while it runs
- Eliminates gum-like buildup in the fuel system, which causes hard starting

  IMPORTANT: Never use fuel additives containing methanol or ethanol.

Filling the Fuel Tank

1. Shut the engine off and set the parking brake.
2. Clean around each fuel tank cap and remove the cap. Add unleaded regular gasoline to both fuel tanks, until the level is 1/4 to 1/2 inch (6 mm to 13 mm) below the bottom of the filler neck. This space in the tank allows gasoline to expand. Do not fill the fuel tanks completely full.
3. Install fuel tank caps securely. Wipe up any gasoline that may have spilled.
4. Fuel gauge is located in right side tank.

Check Engine Oil Level

Before you start the engine and use the machine, check the oil level in the engine crankcase; refer to Checking Oil Level, page 29.

Assembly

Loose Parts

Note: Use the chart below to verify all parts have been shipped.

DESCRIPTION	QTY.	USE
Seat Clamp Washer Capscrew	1 1 4 4	Install seat, page 10.
Steering Wheel Roll Pin Spacer	1 1 1	Install steering wheel, page 9.
Key	2	Use in ignition and “key choice” switch
Capscrew, 1/4–20 x 3/4” Wing Nut, 1/4 x 20	2 2	Secure battery cables to battery, page 10.
Hose Coupling	1	Connect garden hose to washout port during maintenance.
Operator‘s Manual	1	Read manual before operating rider.
Registration Card	1	Fill out and mail to Toro.
Hang Tag	1	Read for warranty information.

Install Steering Wheel

1. Position wheels in straight ahead direction.
2. Slip spacer onto steering shaft until groove in spacer fits over roll pin in shaft (Fig. 1).
3. Slip steering wheel over shaft and line the steering wheel mount hole with the shaft mounting hole (Fig. 1). Toro logo on steering wheel insert should be readable from operator's position.

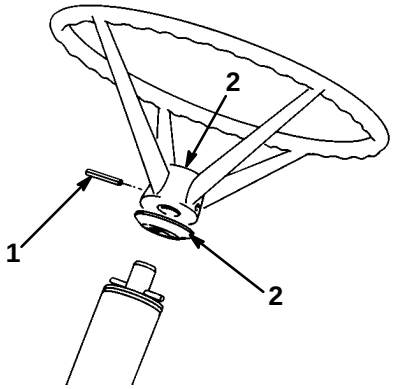

Figure 1

1. Roll pin
2. Spacer
3. Steering wheel insert

4. Insert a drift punch partially through the holes to maintain alignment and insert the roll pin in from the opposite side.
5. Drive the roll pin in until it is flush with the outside of the wheel (Fig. 1).

Install Seat

1. Position seat onto seat base, inserting the seat switch cable through the slot and aligning the mounting holes (Fig. 2).
2. Slide wire clamp over seat switch wire (Fig. 2).
3. Using left front mounting slot in seat base, loosely secure wire clamp and seat to seat base with a capscrew and lock washer (Fig. 2).
4. Mount seat to seat base with (3) remaining capscrews and lock washers.

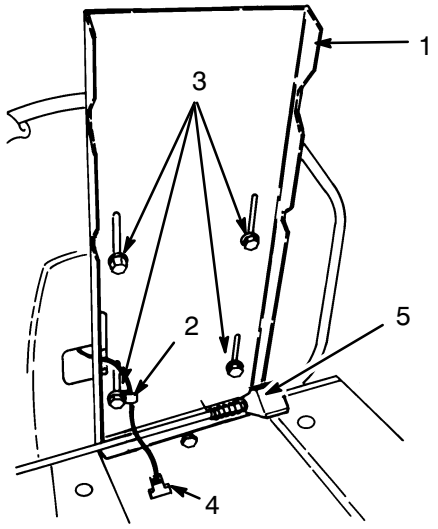

Figure 2

1. Seat base
2. Clamp
3. Capscrews and washers
4. Connector
5. Seat prop latch

Note: Seat may be adjusted for operator comfort by positioning seat as desired in seat base slots.

5. Tighten all locknuts.
6. Insert seat switch connector into wire harness connector.

Activate the Battery

The battery must be removed from the machine so it can be filled with electrolyte and charged. Bulk electrolyte with 1.260 specific gravity must be purchased from a local battery supply outlet. Remove the battery and activate it as follows:

1. Remove wing nut securing battery hold downs to rider chassis (Fig.3).

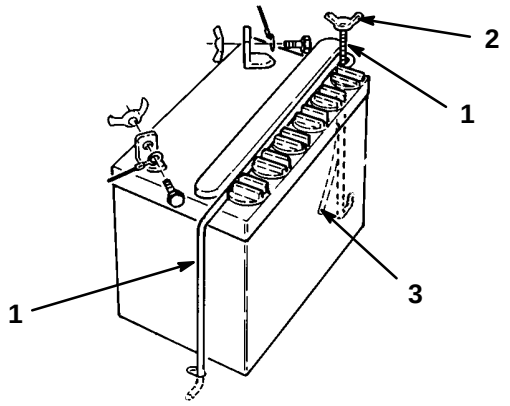

Figure 3

1. Battery hold–down
2. Wing nut
3. Vent tube

2. Remove battery from chassis and set it aside.

3. Remove filler caps from battery and slowly fill each cell until electrolyte is just above the “LOWER” fill line.

4. **L**eave filler caps off and connect a 3-4 amp battery charger to battery posts. Charge battery at a rate of 4 amperes or less for 4 hours (12 volt).

⚠ WARNING

POTENTIAL HAZARD
- **Charging battery produces gasses.**

WHAT CAN HAPPEN
- **Battery gasses can explode.**

HOW TO AVOID THE HAZARD
- **Keep cigarettes, sparks and flames away from battery.**

5. When battery is charged, disconnect charger from electrical outlet and battery posts.

6. Slowly add electrolyte or distilled water to each cell until level is just below the “UPPER” fill line. Reinstall filler caps. Once battery is in service, distilled water only should be added; never add more electrolyte.

IMPORTANT: Do not overfill battery. Electrolyte will overflow onto other parts and severe corrosion and deterioration will result.

7. Install the battery with the terminal posts toward the inside of the machine and vent tube thru hole in the frame.

8. Reinstall battery hold downs.

⚠ WARNING

POTENTIAL HAZARD
- **The battery terminals could short against the battery hold–down or metal tractor components.**

WHAT CAN HAPPEN
- **Sparks can cause the battery gasses to explode.**

HOW TO AVOID THE HAZARD
- **When removing or installing the battery, do not allow the battery terminals to touch any metal parts of the tractor.**
- **Always keep the battery hold–down rods in place to protect and secure the battery.**

9. Install the red positive cable to the positive (+) terminal and the negative cable (black) to the negative (–) terminal of the battery and secure with capscrews and wing nuts.

Fill Crankcase with Oil

The rider is shipped from the factory without oil in the crankcase.

1. Place rider on a level surface.
2. Unscrew and remove the dipstick from the oil fill tube (Fig. 4).
3. Insert a funnel into the tube and slowly add engine oil into the crankcase, using oil fill chart below. Use a high quality detergent oil classified “For Service SF, SG, SH”. Oil viscosity (weight) must be selected according to anticipated ambient temperature. See table below.

4. Oil Fill Chart

8–25	**Rear Engine Rider**	**36 (1.06 l) ounces of oil**

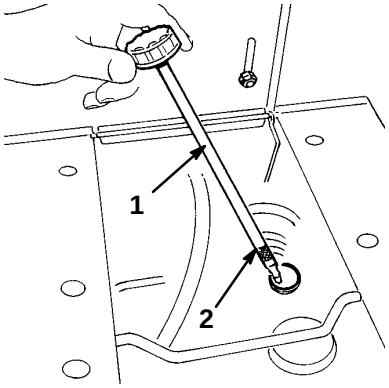

Figure 4

1. Dipstick
2. Full mark

USE THESE SAE VISCOSITY OILS

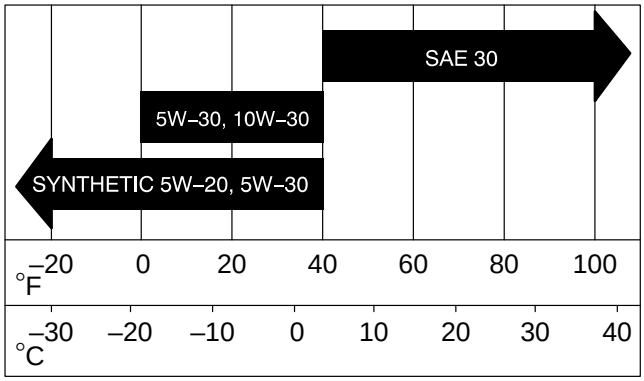

5. Ensure the oil level is to the full mark on the dipstick when it is fully installed. Do not overfill or engine damage may result.
6. Insert the dipstick and turn it clockwise to secure it in the fill tube.

Note: Check the oil level every 5 operating hours or each time rider is used. Initially, drain the oil and replace it after the first 5 hours of operation to remove the contaminants produced by normal engine break-in; thereafter, under normal conditions, change oil after every 25 hours of operation. Change the oil more frequently when the engine is operated in dusty or dirty conditions.

Check Tire Pressure

7. Check front and rear tires for proper inflation. Refer to Operator’s Manual, maintenance section under Tire Pressure.

Operation

Think Safety First

Please carefully read all the safety instructions on pages 3–9. Knowing this information could help you, your family, pets or bystanders avoid injury.

Controls

Become familiar with all the controls (Fig. 6) before you start the engine and operate the machine.

Gear Shift

(Fig. 6)—Transaxle has five forward speeds, neutral and reverse. The gear shift lever is located at right side of operator. An interlock switch prevents engine from being started when transaxle is in any gear except neutral.

Deck Engagement Lever (Power take off [PTO])

(Fig. 6)—Engages and disengages the cutter blade. An interlock switch prevents engine from starting when control is in the ENGAGE position. Engine will start when control is in DISENGAGE position only.

Throttle Control

(Fig. 6)—Connects to and operates carburetor mounted throttle and choke. Control has four positions: IDLE, HOT RESTART, OPERATE and CHOKE. Push control slightly to the left and upward to obtain CHOKE position.

Key Choice

(Fig. 6)—A turn and release switch used for deactivating the “Operating–In–Reverse” interlock feature. Located on the right hand side panel, below and to the rear of the seat.

Ignition Switch

(Fig. 6)—Switch is part of engine ignition system, and it has three positions: OFF, ON and START. Key automatically returns to ON position from START position when released after engine starts.

Height–of–Cut Control

(Fig. 6)—Control varies the cutting height from approx. 1 1/2 to 3 1/2 inches (38 to 89 mm) in five increments.

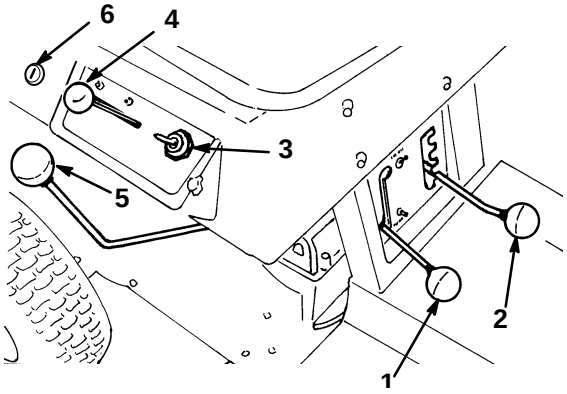

Figure 6

1. Deck engagement lever (PTO)
2. Height–of–cut control
3. Ignition switch
4. Throttle control
5. Gear shift
6. “Key choice” switch

Clutch Pedal

(Fig. 7)—Used in conjunction with gear shift. Depress clutch pedal fully when shifting gears and whenever brake is used.

Brake Pedal

(Fig. 7)—Must be depressed to slow down or stop the rider. When pedal is depressed, a caliper engages the brake disc at side of transaxle. Remember to depress clutch pedal when using brake.

Note: Avoid depressing brake pedal while clutch is engaged because premature brake wear will occur. Do not rest foot on pedal while mowing.

Parking Brake

Always set the parking brake when you stop the machine or leave it unattended.

(Fig. 7)—Parking brake must be used in conjunction with brake pedal. When pedal is depressed, end of parking brake lever holds brake pedal in depressed position and a caliper engages the brake disc at side of transaxle.

Setting the Parking Brake

1. Depress brake pedal fully and shift transaxle to neutral.
2. Move parking brake control sideward and release brake pedal.

Releasing the Parking Brake

1. To release the parking brake, depress brake pedal, and parking brake lever will return it to its disengaged position. Release brake pedal slowly.

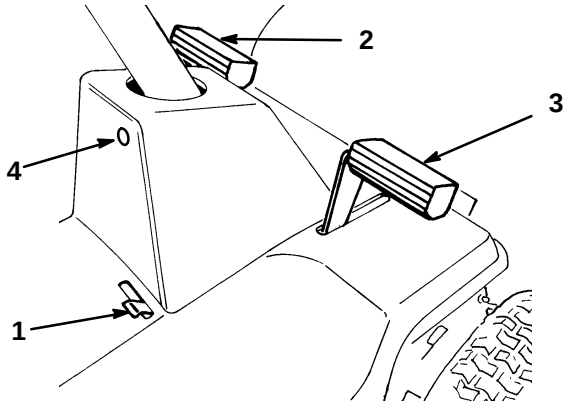

Figure 7

1. Parking brake
2. Clutch pedal
3. Brake pedal
4. Operating–in–Reverse light

Starting and Stopping the Engine

Starting

1. Shift into neutral (N), move deck engagement lever to DISENGAGE. Lock the parking brake.

   Note: An interlock switch on the transmission and deck engagement (PTO) prevents the engine from starting unless the operator is sitting on the seat, the gear shift is in neutral and the deck engagement lever is in the DISENGAGE detent.

2. Move the throttle control to CHOKE position (Fig. 6) when starting a cold engine. However, a hot engine requires no choking. Move throttle to FAST position for starting.

3. Rotate ignition key (Fig. 6) to START position. When engine starts, release the key and move throttle between FAST and SLOW if choke was used for starting. Operate the rider with throttle control in FAST (full throttle) position for best performance.

4. Select desired height-of-cut and move deck engagement lever to ENGAGE. Release parking brake (if necessary), depress clutch pedal and shift into gear.

5. Release clutch pedal slowly and smoothly.

Stopping

1. Depress clutch and brake pedals, move throttle control lever to SLOW position, move deck engagement lever to DISENGAGE.

2. Shift transaxle to neutral and engage parking brake. Rotate the ignition key to OFF.

3. Remove the ignition and “key choice” keys. Wait for all moving parts to stop before getting off seat.

Break–In

The engine requires no special break-in other than changing oil after the first five hours of operation. Operate the transaxle in all gears to ensure that drive system is functioning correctly. After the first five hours of operation, check the condition of the belts.

Adjusting Height–of–Cut

The height-of-cut may be set in one of five positions from approximately 1-1/2 to 3 1/2 inches (38 to 89 mm).

1. Ensure the deck engagement (PTO) lever is in DISENGAGE position.

2. Move height-of-cut control into desired setting.

3. To engage blade for cutting, move deck engagement lever to ENGAGE.

Operating Procedure

1. Move the deck engagement (PTO) lever to DISENGAGE.

2. Start the engine: refer to Starting/Stopping Instructions, page 17.

   IMPORTANT: When rider is used for the first time, operate the transaxle in all gears to ensure that drive system is functioning correctly, and become familiar with the controls and operating characteristics. Never shift while the machine is moving or without first depressing the clutch pedal; transaxle damage could result.

3. Depress clutch pedal and shift transaxle into selected gear. Then release pedal slowly until traction drive engages.

   IMPORTANT: To avoid a jerky start and putting a heavy load on the transaxle, release clutch pedal slowly. If shifting into reverse gear is difficult, jog clutch pedal in and out to get gears to mesh. Do not force the gear shift because damage may result. Should you encounter a jerking or grabbing condition during operation, contact your local Authorized TORO Service Dealer for assistance.

4. To engage blade for cutting, move height-of-cut control to the desired setting. Place throttle in OPERATE position. Then move deck engagement (PTO) lever to ENGAGE position.

5. To stop engine, in sequence, depress clutch and brake pedals, move throttle control to IDLE, deck engagement lever into DISENGAGE, gear shift into neutral, engage parking brake, and rotate the ignition key to OFF position after allowing the engine to idle a short period.

The Safety Interlock System

Understanding the Safety Interlock System

The safety interlock system is designed to prevent the engine from starting unless:

- The power take off (PTO) is “OFF”
- The gear shift lever is in “N” neutral.

The safety system is designed to stop the engine if:

- You rise from the seat when the clutch/brake pedal is released.
- You rise from the seat when the blade (PTO) is “ENGAGED.”
- You shift into reverse with the power take off (PTO) engaged and the operating–in–reverse interlock not deactivated.

Operating–In–Reverse

An interlock feature is provided that prevents the Power Take Off (PTO) from operating while the tractor is traveling in reverse. If the unit is shifted into reverse while the mower blade or other PTO driven attachment is engaged, the engine will stop.

Do not mow while backing up unless it is absolutely necessary. If you need to mow while in reverse gear or use other PTO driven attachments (such as a snowthrower or tiller), this operating–in–reverse interlock feature may be temporarily deactivated.

Before deactivating this feature, be sure there are no children present on or near the property where you are using the tractor, and that none are likely to appear while you are mowing or operating an attachment. Be extra observant after you have chosen to deactivate the interlock feature because the sound of the tractor’s engine might prevent you from being aware that a child or a bystander has entered the area where you are operating the tractor.

If you are certain that you can safely mow in reverse or operate an attachment, deactivate the operating–in–reverse interlock feature by turning the “Key Choice” key (Fig. 6), located on the right hand side panel just below and to the rear of the seat, after engaging the blade (PTO). A red light on the front console (Fig.7) will turn on as a reminder that the operating–in–reverse interlock has been deactivated. Once the interlock is deactivated it stays in this mode—with your mower blade or PTO–driven attachment operating whenever you back up— and the console light stays on until either the blade (PTO) is disengaged, or the engine is turned off.

Note: Do not insert the “Key Choice” key unless it is absolutely necessary to mow in reverse or operate an attachment. The “Key Choice” key should also be removed from the unit if it will be operated by someone other than a responsible, experienced operator. This will prevent the unit from operating in reverse with the mower blade or other PTO attachment engaged. Always remove both the ignition and the “Key Choice” keys and put them in a safe place out of the reach of children when leaving the unit unattended.

⚠ DANGER

POTENTIAL HAZARD

- **A child or bystander could be backed over by a riding mower with its blade(s) engaged.**

WHAT CAN HAPPEN

- **Blade contact will cause serious personal injury or death.**

HOW TO AVOID THE HAZARD

- **Do not mow in reverse unless absolutely necessary.**
- **Always look backward and down before backing up.**
- **Use "Key Choice" switch only if you are certain no children or other bystanders will appear in the mowing area.**
- **Always remove both the ignition and "Key Choice" keys and put them in a safe place out of the reach of children or unauthorized users when leaving the unit unattended.**

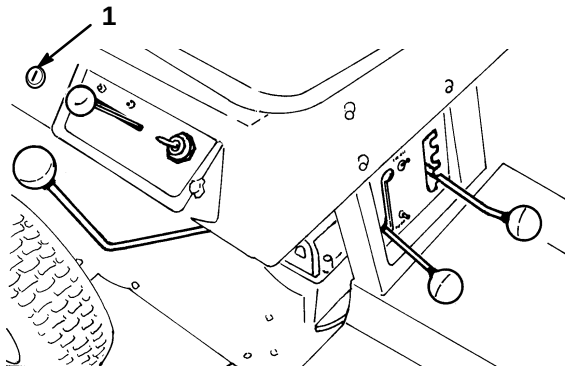

Figure 6

1. "Key choice" switch

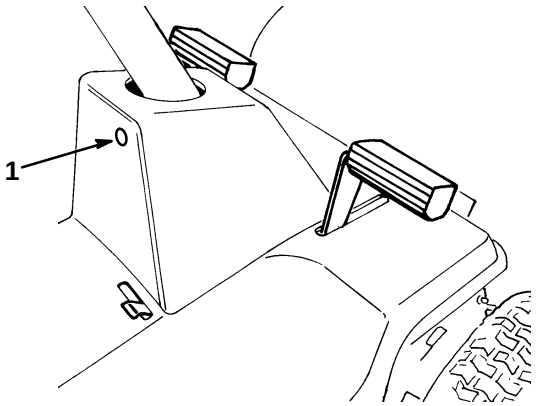

Figure 7

1. Operating–in–Reverse light

Testing the Safety Interlock System

Test the safety interlock system before you use the machine each time. If the safety system does not operate as described below, have an Authorized Service Dealer repair the safety system immediately.

1. Move gear shift into neutral.

2. Move the deck engagement lever into ENGAGE. Sit on the seat and rotate ignition key to START. Engine should not crank; but if it does, the interlock system is malfunctioning and it must be repaired by an Authorized TORO Service Dealer. If the engine does not crank, proceed to step 3.

3. Move deck engagement lever into DISENGAGE. Sit on the seat, depress the brake and clutch pedals, engage the parking brake and shift into gear. Rotate ignition key to START. Engine should not crank; but if it does, the interlock system is malfunctioning and must be repaired by an Authorized TORO Service Dealer. If engine does not crank, proceed to step 4.

4. Sit on the seat, move gear shift into neutral, deck engagement lever into DISENGAGE and ensure parking brake is engaged. Rotate ignition key to START. Engine should start and continue to run. Then engage deck engagement lever and carefully raise off the seat: the engine should stop. If engine does not stop running, shut engine off and have interlock system repaired by an Authorized TORO Service Dealer. If engine shuts off when you raised off the seat, the interlock system is functioning correctly and the rider can be operated safely.

5. Put the PTO lever in the “disengage” position and the gear shifter in neutral. Now start the engine. While the engine is running, move the PTO lever to the “engage” position, push in the clutch and put the gear shifter in reverse. The engine should stop.

6. Put the PTO lever in the “disengage” position and the gear shifter in neutral. Now start the engine. Move the PTO lever to the “engage” position and turn the “Key Choice” key and release. The Operating–in–Reverse warning light should illuminate. Move the PTO lever to the “disengage” position and the Operating–in–Reverse warning light should turn off.

Side Discharging or Bagging

To side discharge or use bagging attachment, stop engine and wait for all moving parts to stop.

1. Remove the wing nut securing the discharge cover (Fig. 8) to the mower housing. **NEVER REMOVE THE GRASS DEFLECTOR FROM THE MOWER HOUSING (Fig. 8).**

2. Lift the grass deflector and metal tab together to enable the removal of the metal tab. Continue to lift the grass deflector enough to remove the plastic discharge cover off the long bolt. Save the discharge cover and metal tab for possible future reinstallation.

3. Reinstall the wing nut and tighten. Lower the grass deflector fully down. Unit is ready for side discharge or bagging.

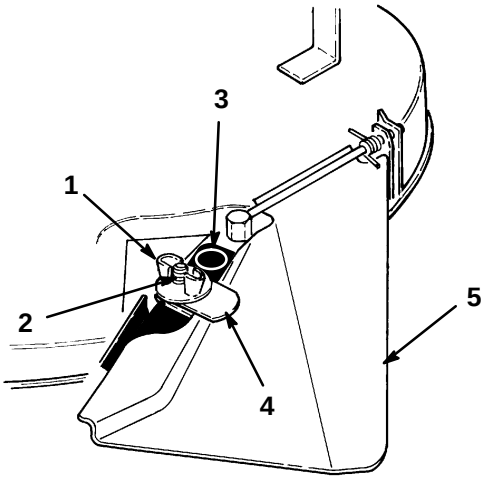

Figure 8

1. Wing nut
2. Long bolt
3. Plastic discharge cover
4. Metal tab
5. Grass deflector

For improved bagger performance change to high sail blade and remove Recycler® kickers. If you no longer wish to side discharge or bag clippings, the discharge cover can be reinstalled by securing it the mower housing with the wing nut and metal tab.

IMPORTANT: When the discharge cover is in place, it **must** be secured to the grass deflector with the metal tab and wingnut.

⚠ DANGER

POTENTIAL HAZARD
- **Without the grass deflector, discharge cover, or complete grass catcher assembly mounted in place, you and others are exposed to blade contact and thrown debris.**

WHAT CAN HAPPEN
- **Contact with rotating mower blades(s) and thrown debris will cause injury or death.**

HOW TO AVOID THE HAZARD
- **NEVER remove the grass deflector from the mower because the grass deflector routes material down toward the turf. If the grass deflector is ever damaged, replace it immediately.**
- **Never put your hands or feet under the mower.**
- **Never try to clear discharge area or mower blades unless you move the power take off (PTO) to "OFF" and rotate the ignition key to "OFF". Also remove the key and pull the wire off the spark plug(s).**

Driving Forward or Backward

The throttle control regulates the engine speed as measured in rpm (revolutions per minute). Place the throttle control in the "FAST" position for best performance while mowing.

To go forward push the clutch in and place the gear shifter in a forward gear, release the parking brake: refer to Releasing the Parking Brake, page 17 and slowly release the clutch. To go in reverse push the clutch in to stop and after stopping completely, place the gear shifter in reverse. Slowly release the clutch.

Note: For reverse motion, with the PTO engaged, the operating–in–reverse feature must be deactivated by the “key choice” switch located on the right hand side panel just below and to the rear of the seat.

Stopping the Machine

To stop the machine, push the clutch in and shift to neutral (”N”). Disengage the power take off (PTO), and turn the ignition key to “OFF” to stop the engine. Also set the parking brake if you leave the machine unattended; refer to Setting the Parking Brake, page 17. Remember to remove the keys from the ignition and “key choice” switches.

⚠ CAUTION

POTENTIAL HAZARD

- **Someone could move or attempt to operate the tractor while it is unattended.**

WHAT CAN HAPPEN

- **Children or bystanders may be injured if they use the tractor.**

HOW TO AVOID THE HAZARD

- **Always remove the ignition and “key choice” keys and set the parking brake when leaving the machine unattended, even if just for a few minutes.**

IMPORTANT: To prevent brake wear, do not “Ride the Brakes”. Shift to a lower speed for slower ground speed. Choose a slow speed so that you will not have to stop or shift while on the slope.

Positioning the Seat

The seat can move forward and backward. Position the seat where you have the best control of the machine and are most comfortable.

1. Raise the seat and loosen the lock nuts (Fig. 9).
2. Slide the seat to the desired position and tighten the lock nuts.

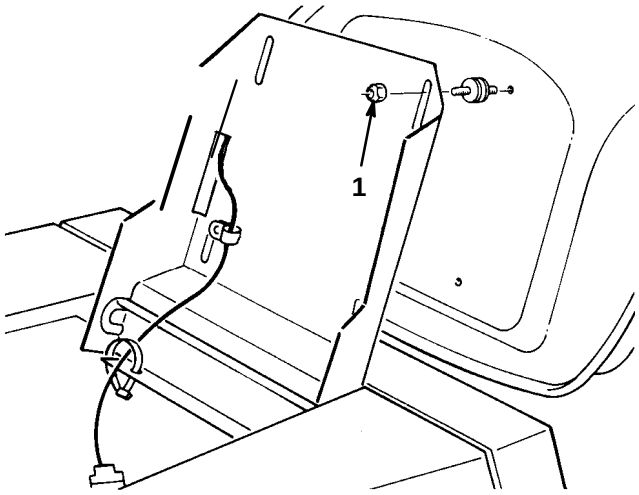

Figure 9

1. Lock nuts

Recycler® Rider Tips

Recycler® Rider Features

Your Toro Recycler® rider has a new and completely different cutting concept. It leaves your lawn with a bagged look without bagging clippings. The rider is equipped with special parts (Fig. 10) which increase your rider's ability to cut and recut grass clippings, leaves, and other yard debris into tiny particles which are injected down into the grass. These parts are:

- Deck ring
- Special blade and blade stiffener
- Discharge cover
- Four special "kickers" positioned on the underside of the mower deck in strategic positions (A fifth kicker is molded into the discharge cover).

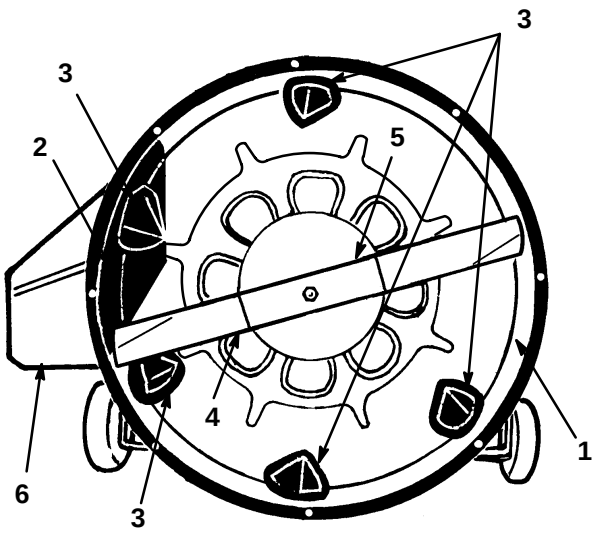

Figure 10

1. Deck ring
2. Discharge cover
3. Kickers
4. Blade
5. Blade stiffener
6. Grass deflector

Tips for Cutting Grass

Even with the Recycler® rider, you may encounter conditions where it is not possible to incorporate all of the grass clippings or leaves all of the time into the grass. Follow these instructions for the best cutting results and lawn appearance:

- Always use FAST (full) throttle when mowing.
- Maintain a **sharp blade** throughout the cutting season. A sharp blade cuts cleanly and without tearing or shredding the grass blades like a dull blade. Tearing and shredding causes the grass to turn brown at the edges which impairs growth and increases susceptibility to diseases. About every 30 days, remove the wire from the spark plug and check the cutter blade for sharpness. File down any nicks on blade to restore its sharp edge.
- Use the washout port to clean clippings and dirt from the underside of the mower after each use. If grass and dirt build up inside the mower, cutting quality will eventually become unsatisfactory.
- Very long or extremely wet grass can be cut, but specific operating techniques must be used. Start by setting height-of-cut in the highest position. Using 1st gear and maximum throttle speed, move into the grass and cut a swath that is only half as wide as the mower housing. If side discharging, direct grass clippings toward area that was cut previously. Stop forward movement occasionally to allow discharge area to clear itself. Cutting too much grass may clog the mower housing and discharge area. If mower housing does clog, shut engine off, disengage blade and remove the obstruction with a stick.

⚠ DANGER

POTENTIAL HAZARD
- **Unexpected blade contact can occur**

WHAT CAN HAPPEN
- **Personal injury can occur from contact with blade**

HOW TO AVOID THE HAZARD
- **Depress clutch and brake pedals, shift into neutral and turn ignition key to "OFF" position. Remove wire from spark plug to prevent someone from accidentally starting the machine.**
- **Never attempt to clear a clog with the engine running and the blade engaged.**

- When the rider is used to cut a lawn for the first time, cut grass slightly longer than normal to ensure that cutting height of mower housing will not cause scalping, which could result from severe undulations of the ground. In general, however, the cutting height used in the past is probably the best one to use. When cutting grass over six inches tall, you may want to cut the lawn twice to hide clippings down in the grass.

- If the grass is ever allowed to grow slightly longer than normal, or if it contains a high degree of moisture, raise cutting height higher than usual and cut the grass at this setting. Next, cut the grass again using the lower, normal setting. This method of cutting long grass results in an even distribution of clippings and an acceptable quality-of-cut.

- In the heat of the summer, it is best to cut only about 1/3 of the grass blade. Cutting below the 3rd setting is not recommended unless grass is sparse or it is late fall when grass growth begins to slow down.

- If the cutting width of the rider is wider than the mower previously used, raise height-of-cut setting one notch to ensure undulations in turf are not cut too short.

- MOWING IN EXTREME CONDITIONS—Air is required to cut and recut grass clippings in rider housing, so do not set height-of-cut too low or totally surround housing by uncut grass. Always try to have one side of the rider housing free from uncut grass, allowing air to be drawn into housing. When making an initial cut thru center of uncut area, operate rider at a slower ground speed and back up if rider starts to clog.

- STOPPING RIDER—If forward motion of rider has to be stopped while cutting, a clump of grass clippings may be deposited on lawn. Follow this procedure for stopping while cutting:

  A. With blade engaged, move onto a previously cut area.

  B. Raise deck one or two height-of-cut settings while driving rider forward and deck is in operation.

  C. Depress clutch and brake pedals, move throttle control lever to IDLE position, disengage mower and rotate ignition key to OFF.

- MOW AT PROPER INTERVALS—Under most normal conditions you'll need to mow approximately every 4–5 days. But remember, grass grows at different rates at different times. This means that in order to maintain the same height-of-cut, which is a good practice, you'll need to cut more frequently in early spring; as the grass growth rate slows in mid summer, cut only every 8–10 days. If you are unable to mow for an extended period due to weather conditions or other reasons, mow first with the height-of-cut at a high level; then mow again 2–3 days later with a lower height setting.

- Alternate mowing direction. This helps disperse clippings over lawn for even fertilization.

⚠ DANGER

POTENTIAL HAZARD

- **Without the grass deflector, discharge cover, or complete grass catcher assembly mounted in place, you and others are exposed to blade contact and thrown debris.**

WHAT CAN HAPPEN

- **Contact with rotating mower blades(s) and thrown debris will cause injury or death.**

HOW TO AVOID THE HAZARD

- **NEVER remove the grass deflector from the mower because the grass deflector routes material down toward the turf. If the grass deflector is ever damaged, replace it immediately.**
- **Never put your hands or feet under the mower.**
- **Never try to clear discharge area or mower blades unless you move the power take off (PTO) to "OFF" and rotate the ignition key to "OFF". Also remove the ignition and "key choice" keys and pull the wire off the spark plug(s).**

The Recycler® rider's special features reduce clipping size, thus decreasing amount of grass to be disposed of and number of times bagger will have to be emptied.

Note: When bagger is full, mower will begin to inject clippings down into the grass.

If the lawn appearance is not satisfactory after mowing, try one of the following:

- Sharpen the blade.
- Raise the height-of-cut setting on your mower.
- Cut your grass more frequently.
- Reduce ground speed.
- Overlap cutting swaths instead of cutting a full swath with each pass.
- Mow across the marginal areas a second time.

Tips For Cutting Leaves

In the fall, you can cut your leaves up into finely cut particles and inject the particles down into the grass. When spring arrives, the leaf particles will have decomposed and restored valuable nutrients to the soil.

- When cutting is complete, always be sure that 50% of the lawn shows through the finely cut leaf cover. This may require one or more passes over the leaves.
- If there are more than five inches of leaves on lawn, raise the deck one or two notches higher. This makes it easier to feed leaves under mower deck.
- If leaves are not cut up finely enough to be hidden down in the grass, make a second pass 90 degrees to the first pass.
- If you cut up a lot of oak leaves, you might want to add lime to your grass in the spring. Lime reduces the acidity of oak leaves.

Maintenance

Service Interval Chart

Service Operation	5 Hours	25 Hours	Storage Service	Spring Service	2 Years	Notes
Change Oil (Initial)	X					
Change Oil (Periodic)		X	X			
Check Safety Interlock	X	X		X	X	Before each use
Check Cutter Blade	X	X	X			
Check Brake	X		X	X		
Grease Front Axle Spindles		X	X			More often in dusty, dirty, conditions
Lubricate Pivot Points		X	X			
Service Air Cleaner		X	X			
Check Spark Plug		X	X	X		
Check Blade Drive Belt			X			
Check Traction Drive Belt			X			
Check Drive Chain	X	X	X			More often in dusty, dirty, conditions
Drain Gasoline			X			
Clean Outside of Engine		X	X			
Clean Mower Housing	X		X			
Clean Blower Screen On Engine		X	X	X		
Paint Chipped Surfaces			X			
Replace Interlock Switches					X	

⚠ CAUTION

POTENTIAL HAZARD

- **If you leave the key in the ignition switch, someone could start the engine.**

WHAT CAN HAPPEN

- **Accidental starting of the engine could seriously injure you or other bystanders.**

HOW TO AVOID THE HAZARD

- **Remove the key from the ignition switch and pull the wire(s) off the spark plug(s) before you do any maintenance. Also push the wire(s) aside so it does not accidentally contact the spark plug(s).**

Air Cleaner

Service Interval/Specification

Foam Element: Clean and re-oil after every 25 operating hours, or yearly, whichever occurs first.Paper Element: Replace after every 100 operating hours or yearly, whichever occurs first.Service the air cleaner more frequently (every few hours) if operating conditions are extremely dusty or sandy.

1. Remove the wire from the spark plug (Fig. 9).

2. Remove the knob and air cleaner cover (Fig. 6).

3. Every 25 hours the foam pre–cleaner should be cleaned (Fig. 6). Remove foam pre–cleaner by sliding it off the paper cartridge (Fig. 6).

A. Wash the foam pre–cleaner in liquid soap and warm water. Rinse thoroughly in clear water.

B. Wrap the foam pre–cleaner in cloth and squeeze it dry

C. .Saturate the foam in engine oil. Squeeze it to remove excess oil.

4. The paper air cleaner cartridge should be replaced every 100 hours. Remove the nut from the top of the paper cartridge (Fig. 6).

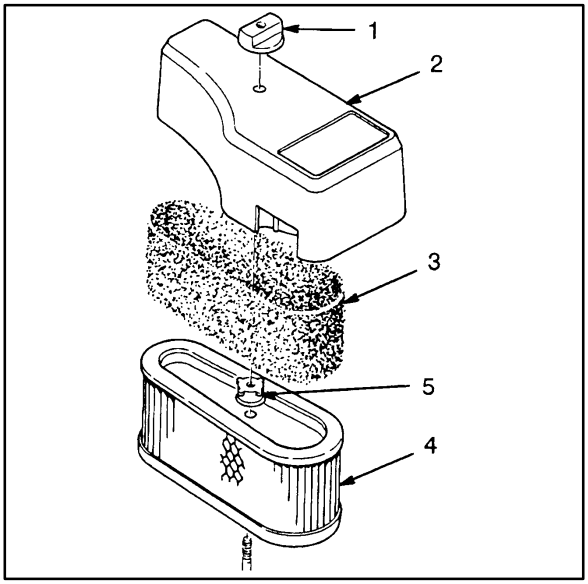

Figure 6

1. Knob
2. Air cleaner cover
3. Foam pre–cleaner
4. Paper cartridge
5. Nut

5. Clean the air cleaner body carefully to prevent dirt from entering carburetor. Remove and discard the paper cartridge.

6. Insert a new paper cartridge into the air cleaner body. Reassemble the air cleaner.

IMPORTANT: Petroleum solvents, such as kerosene, are not to be used to clean the paper cartridge. They may cause deterioration of the cartridge. DO NOT OIL THE CARTRIDGE. DO NOT USE PRESSURIZED AIR TO CLEAN THE CARTRIDGE.

IMPORTANT: Always operate the engine with the air cleaner element in place or engine damage will result.

Engine Oil

Service Interval/Specification

Change oil:

- After the first 5 operating hours.
- After every 25 operating hours.

Note: Change oil more frequently when operating conditions are extremely dusty or sandy.

Oil Type: Detergent oil (API service SF, SG, SH)

Crankcase Capacity: 36 oz. (1.06 l)

Viscosity: See table below

USE THESE SAE VISCOSITY OILS

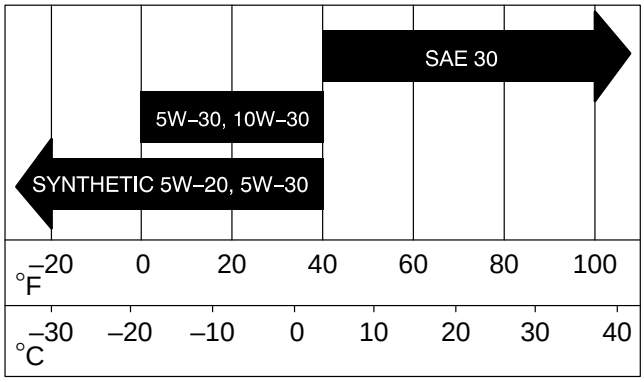

Checking Oil Level

1. Park the machine on a level surface, disengage the power take off (PTO), set the parking brake, and turn the ignition key to “OFF” to stop the engine. Remove the key.
2. Clean around the oil dipstick (Fig. 7) so dirt cannot fall into the filler hole and damage the engine.
3. Unscrew the oil dipstick and wipe the metal end clean (Fig. 7).
4. Screw dipstick fully into filler neck; then remove it and check oil level on dipstick. If level is low, add only enough oil to raise level to FULL mark. Do not overfill or engine damage may result.

IMPORTANT: Do not overfill the crankcase with oil because the engine may be damaged.

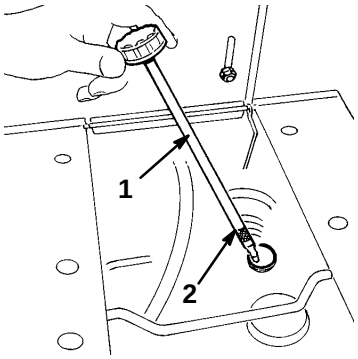

Figure 7

1. Oil dipstick
2. Full mark

Changing/Draining Oil

1. Start the engine and let it run five minutes. This warms the oil so it drains better.
2. Park the machine so that the drain side is slightly lower than the opposite side to assure the oil drains completely. Then disengage the power take off (PTO), set the parking brake, and turn the ignition key to “OFF” to stop the engine. Remove the ignition and “key choice” keys.
3. Move the PTO into DISENGAGE detent and set height–of–cut in lowest position.
4. Place a drain pan below drain plug (Fig. 8). Remove drain cap. Allow all oil to flow into drain pan.
5. Reinstall drain cap after oil stops flowing.

Note: Dispose of the used oil at a certified recycling center.

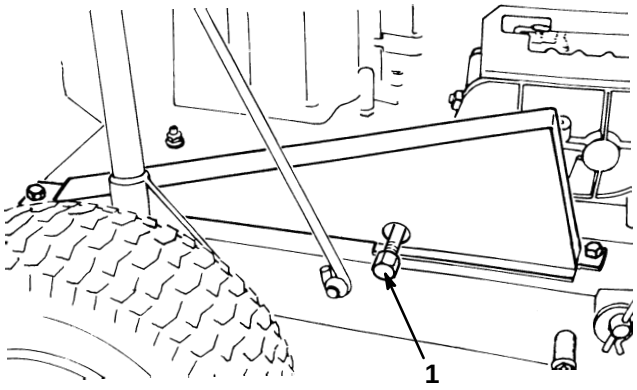

Figure 8

1. Drain cap

6. Unscrew dipstick and add oil to crankcase. Refer to Fill Crankcase With Oil, page 15. Crankcase capacity is 36 oz. (1.06 l). **DO NOT OVERFILL** or engine damage may result.

Spark Plug

Service Interval/Specification

Since air gap between center and side electrodes of the spark plug increases gradually during normal operation of the engine, check condition of electrodes after every 25 operating hours. Recommended air gap is 0.030 of an inch (0.762 mm). Correct spark plug to use is: Champion RJ -19LM.

Note: The spark plug usually lasts a long time; however, the plug should be removed and checked whenever the engine malfunctions.

Removing the Spark Plug(s)

1. Disengage the power take off (PTO), set the parking brake, and turn the ignition key to “OFF” to stop the engine. Remove the key.

2. Pull the wire off the spark plug (Fig. 9).

3. Clean area around spark plug so foreign matter cannot fall into cylinder when spark plug is removed.

4. Remove the spark plug(s).

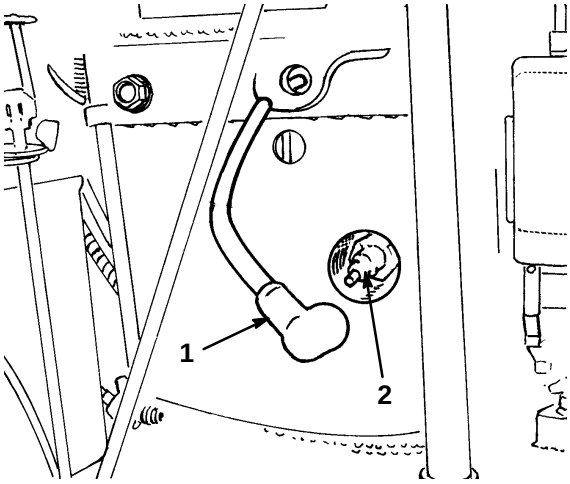

Figure 9

1. Spark plug wire
2. Spark plug

Checking the Spark Plug

1. Look at the center of the spark plug(s) (Fig. 10). If you see light brown or gray on the insulator, the engine is operating properly. A black coating on the insulator usually means the air cleaner is dirty.

   IMPORTANT: Never clean the spark plug(s). Always replace the spark plug(s) when it has: a black coating, worn electrodes, an oily film, or cracks.

2. Check the gap between the center and side electrodes (Fig. 10). Bend the side electrode (Fig. 10) if the gap is not correct.

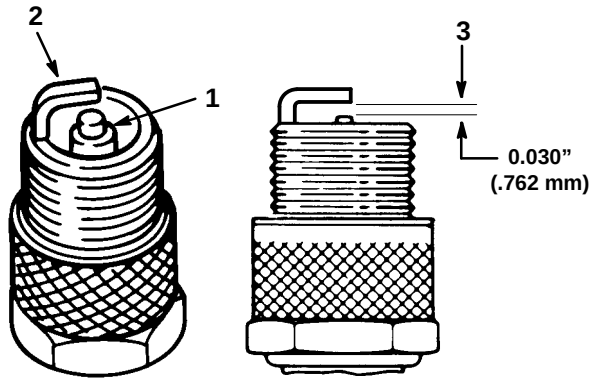

Figure 10

1. Center electrode insulator
2. Side electrode
3. Air gap (not to scale)

Installing the Spark Plug(s)

1. Install the spark plug(s). Make sure the air gap is set correctly.
2. Tighten the spark plug(s) to 15 ft–lb (20.4 Nm).
3. Push the wire(s) onto the spark plug(s) (Fig. 9).

Greasing and Lubrication

Service Interval/Specification

Grease the machine after every 25 operating hours or yearly, whichever occurs first. Grease more frequently when operating conditions are extremely dusty or sandy.

Grease Type: General-purpose grease.

How to Grease

1. Disengage the power take off (PTO), set the parking brake, and turn the ignition key to "OFF" to stop the engine. Remove the ignition and "key choice" keys.
2. Clean the grease fittings with a rag. Make sure to scrape any paint off the front of the fitting(s).
3. Connect a grease gun to the fitting. Pump grease into the fittings until grease begins to ooze out of the bearings.
4. Wipe up any excess grease.

Where to Add Grease

1. Lubricate the front wheels and spindles until grease begins to ooze out of the bearings (Fig. 11).

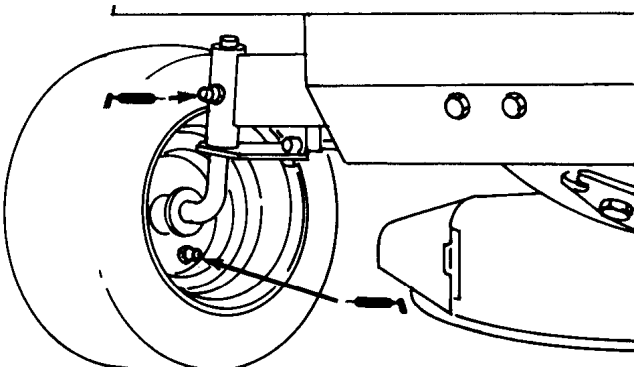

Figure 11

2. The rear wheels should be removed and axles greased once a year to prevent the formation of rust and to simplify future wheel removal.

Lubricate Pivot Points

The mechanical pivot points on the rider must be oiled after every 25 hours of operation; lubricate more frequently when conditions are dusty or sandy.

IMPORTANT: To lubricate all the mechanical pivot points, the rider must be tipped on its rear end. However, before the rider is tipped, drain all gasoline from fuel tank and oil from crankcase. Also remove battery so acid does not spill on the rider.

1. Drain gasoline from fuel tank: refer to Draining Gasoline From Fuel Tank, page 34.
2. Drain oil from crankcase: refer to Changing Crankcase Oil, steps 1-6, page 29.
3. Remove battery from chassis: refer to Activating and Charging Battery, page 14.
4. Shift transmission into 1st gear and engage parking brake.
5. Tip rider up and onto its rear end.
6. Remove mower housing from rider chassis: refer to Removing/Installing Mower Housing, steps 1-10, page 37.
7. Lubricate all mechanical pivot points on rider and mower housing with light oil.
8. Install mower housing onto rider chassis: refer to Removing/Installing Mower Housing, page 37.
9. Tip rider back to its normal operating position.
10. Fill crankcase with oil: refer to Fill Crankcase With Oil, page 15.
11. Fill fuel tank with gasoline: refer to Fill Fuel Tank With Gasoline, page 11.
12. Install the battery: refer to Installing the Battery, page 35

Cleaning Cooling System

Clean cooling system frequently. Remove build–up of grass, dirt or other debris from the cylinder and cylinder head cooling fins, air intake screen on flywheel end, and carburetor–governor levers and linkage. This will help ensure adequate cooling and correct engine speed and reduce the possibility of overheating and mechanical damage.

Tire Pressure

Service Interval/Specification

Maintain the air pressure in the front and rear tires as specified. Check the pressure at the valve stem after every 25 operating hours or monthly, whichever occurs first (Fig. 12). Check the tires when they are cold to get the most accurate pressure reading.

Set pressure to 12 psi (83 kPa) front and rear for tractors with serial numbers 9902000 and prior.

Set pressure to 20 psi (138 kPa) (tires with markings of “Kenda”, “Super Turf”) for tractors with serial numbers 9902001 and up.

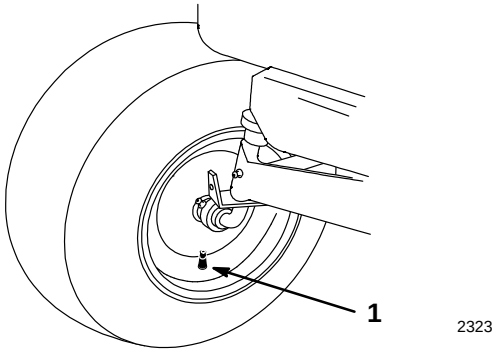

Figure 12

1. Valve stem

Brake

Always set the parking brake when you stop the machine or leave it unattended. If the parking brake does not hold securely, an adjustment is required.

Checking the Brake

1. Park the machine on a level surface, disengage the power take off (PTO), set the parking brake, and turn the ignition key to “OFF” to stop the engine. Remove the key.
2. Rear wheels must lock and skid when you try to push the tractor forward. Adjustment is required if the wheels turn and do not lock; refer to Adjusting the Brake, page 33.
3. Release the brake and push the tractor forward. The wheels should rotate freely.
4. If both conditions are met no adjustment is required.

Adjusting the Brake

Adjust brake pucks if the parking brake does not hold or braking power is not sufficient when brake pedal is depressed. The brake is located on the left side of the transaxle (Fig. 13).

1. Shut engine off and remove wire from spark plug.
2. Remove battery from chassis: refer to Removing the Battery, page 34.
3. Tighten locknut approximately 1/4 turn clockwise (Fig. 13).
4. Check operation of the brake by pushing rider: no brake drag should be evident. If drag is evident, rotate locknut an additional 1/8 turn counter-clockwise or until there is no drag.

   IMPORTANT: With the parking brake released, the rear wheels must rotate freely when you push the mower. If brake action and free wheel rotation cannot be achieved contact your service dealer immediately.

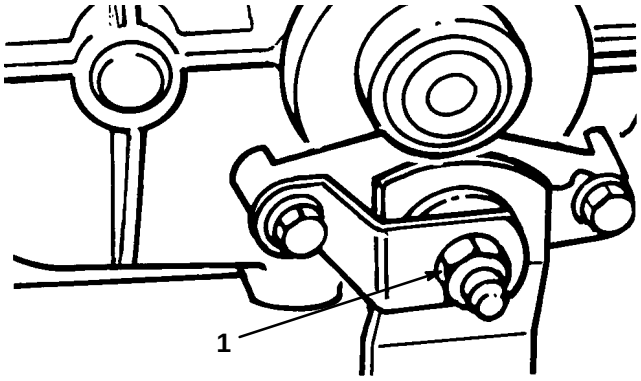

Figure 13

1. Locknut

Fuel Tank

Draining The Fuel Tank

⚠ DANGER

POTENTIAL HAZARD
- **In certain conditions gasoline is extremely flammable and highly explosive.**

WHAT CAN HAPPEN
- **A fire or explosion from gasoline can burn you, others, and cause property damage.**

HOW TO AVOID THE HAZARD
- **Drain gasoline from the fuel tank when the engine is cold. Do this outdoors in an open area. Wipe up any gasoline that spills.**
- **Never drain gasoline near an open flame or where gasoline fumes may be ignited by a spark.**
- **Never smoke a cigarette, cigar or pipe.**

1. Clean area around fuel tank cap so foreign matter cannot enter filler hole when cap is removed. Next, remove cap from fuel tank.

2. Using a pump-type syphon, drain gasoline into a clean gas can.

Note: There is no other recommended way to drain gasoline from the fuel tank, other than by using a pump-type syphon. An inexpensive syphon can be purchased at a hardware store.

Battery

Service Interval/Specification

Check the electrolyte level in the battery every 5 hours. Always keep the battery clean and fully charged. Use a paper towel to clean the battery case. If the battery terminals are corroded, clean them with a solution of four parts water and one part baking soda. Apply a light coating of grease to the battery terminals to prevent corrosion.

Voltage: 12 v, 160 Cold Cranking Amps

Removing the Battery

1. Disengage the power take off (PTO), set the parking brake, and turn the ignition key to “OFF” to stop the engine. Remove the key.

2. Remove wing nut securing battery hold downs to rider chassis (Fig.14).

3. Disconnect the negative (black) ground cable from the battery post (Fig. 14).

4. Lift the rubber cover up on the positive (red) cable. Disconnect the positive (red) cable from the battery post (Fig. 14).

5. Remove wing nut securing battery hold downs to rider chassis (Fig.14).

6. Lift up on top battery hold down and pivot rearward

7. Remove battery from chassis.

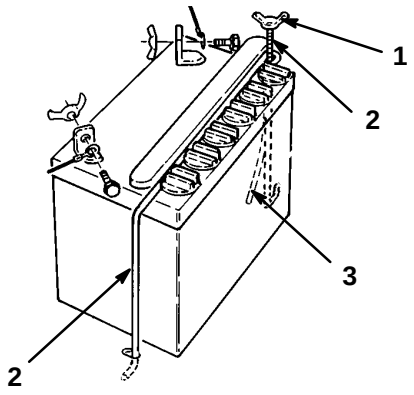

Figure 14

1. Wing nut
2. Battery hold down
3. Vent tube

Installing the Battery

1. Install the battery with the terminal posts toward the inside of the machine and vent tube thru hole in the frame.
2. Secure battery in chassis with hold down rods.
3. Install the red positive cable to the positive (+) terminal and the negative cable (black) to the negative (–) terminal of the battery and secure with capscrews and wing nuts.

Checking Electrolyte Level

1. With the engine off, lift the seat to see the battery.
2. Open covers to see into the cells. The electrolyte must be up to the lower part of the tube (Fig. 15). Do not allow the electrolyte to get below the plates. (Fig. 15).
3. If the electrolyte is low, add the required amount of distilled water; refer to Adding Water to the Battery, page 35.

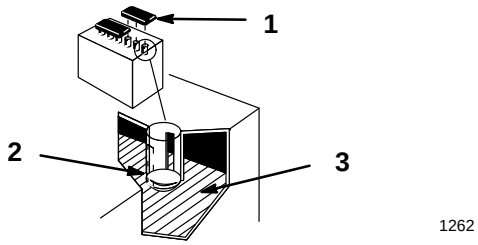

Figure 15

1. Filler caps
2. Lower part of tube
3. Plates

Adding Water to the Battery

The best time to add distilled water to the battery is just before you operate the machine. This lets the water mix thoroughly with the electrolyte solution.

1. Clean the top of the battery with a paper towel.
2. Lift off the filler caps (Fig. 15).
3. Slowly pour distilled water into each battery cell until the level is up to the lower part of the tube (Fig. 15).

   IMPORTANT: Do not overfill the battery because electrolyte (sulfuric acid) can cause severe corrosion and damage to the chassis.
4. Press the filler caps onto the battery.

Charging the Battery

IMPORTANT: Always keep the battery fully charged (1.260 specific gravity). This is especially important to prevent battery damage when the temperature is below 32°F (0°C).

1. Remove the battery from the chassis; refer to Removing the Battery, page 34.
2. Check the electrolyte level; refer to Checking Electrolyte Level, page 35, steps 2–3.
3. Remove the filler caps from the battery and connect a 3 to 4 amp battery charger to the battery posts. Charge the battery at a rate of 4 amperes or less for 4 hours (12 volts). Do not overcharge the battery. Install the filler caps after the battery is fully charged.

⚠ WARNING

POTENTIAL HAZARD
- **Charging the battery produces gasses.**

WHAT CAN HAPPEN
- **Battery gasses can explode.**

HOW TO AVOID THE HAZARD
- **Keep cigarettes, sparks and flames away from battery.**

4. Install the battery in the chassis; refer to Installing the Battery, page 35.

Servicing Cutter Blade

1. Shut off engine and remove wire from spark plug. Remove ignition key.

IMPORTANT: To remove blade from spindle shaft, the rider must be tipped on its rear end. Before the rider is tipped, drain all gasoline from fuel tank and oil from crankcase. Also remove battery so acid does not spill onto the rider. (ALL BAGGING ATTACHMENTS MUST BE REMOVED BEFORE TIPPING RIDER.)

2. Drain gasoline from fuel tank: refer to Draining Gasoline From Fuel Tank, page 34.

3. Drain oil from crankcase: refer to Changing Crankcase Oil, steps 1-6, page 29.

4. Remove battery from chassis: refer to Removing the Battery, page 34

5. Shift transmission into 1st gear and engage parking brake. Tip rider onto its rear end.

6. Grasp end of blade using a rag or thickly padded glove; then remove blade bolt, washer and blade (Fig. 16).

Note: Since blade bolt is tightened to 45-60 ft-lb (61-81 Nm) at the factory, it may be difficult to remove. If the bolt cannot be removed, contact an Authorized TORO Service Dealer or a "service station" for assistance.

7. Using a file, sharpen cutting edge at both ends of the blade (Fig. 17).

IMPORTANT: Sharpen top side of the blade and maintain original cutting angle to ensure a sharp cutting edge. The blade will remain balanced if same amount of material is removed from both cutting edges.

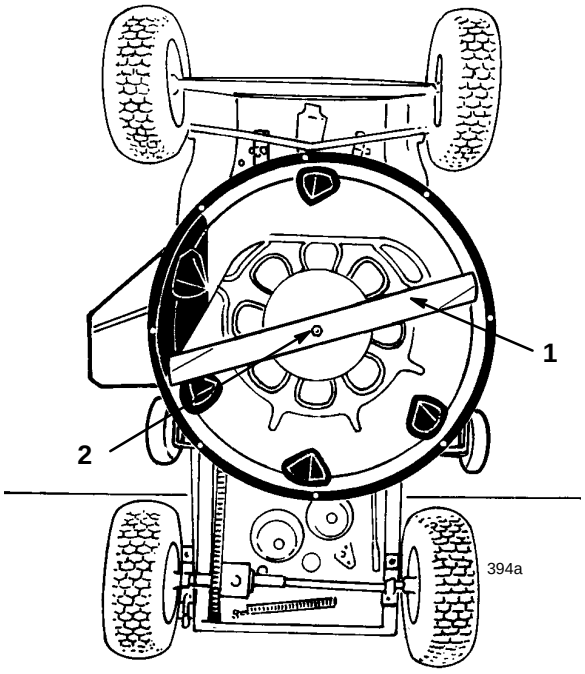

Figure 16

1. Blade
2. Bolt and washer

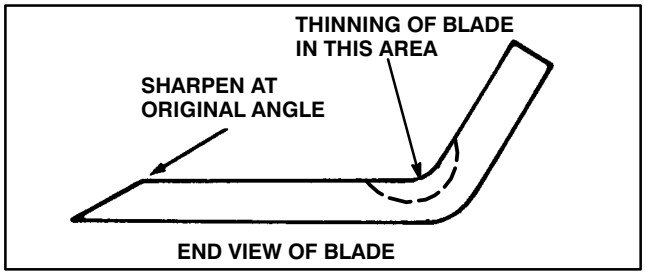

Figure 17

8. Check balance of blade by putting it on a blade balancer. (An inexpensive balancer can be purchased at a hardware store.) A balanced blade will stay in a horizontal position on the balancer. By contrast, a blade that is not balanced will settle to the heavy side. If blade is not balanced, file more material off cutting edge of the blade. Continue to file and check the blade until it is balanced.

9. In sequence, reinstall blade, washer and blade bolt (Fig. 16). Tighten blade bolt to 45-60 ft-lb (61-81 Nm).

IMPORTANT: Make sure cutting edge of blade is away from mower housing

10. Tip rider back to its normal operating position.

11. Fill crankcase with oil: refer to Fill Crankcase with Oil, page 15

12. Fill fuel tank with gasoline: refer to Fill Fuel Tank With Gasoline, page 11.

13. Install the battery: refer to Installing the Battery, page 35

⚠ WARNING

POTENTIAL HAZARD
- **Worn, eroded or cracked blade can be dangerous.**

WHAT CAN HAPPEN
- **Blade can fail and cause personal injury to bystanders.**

HOW TO AVOID THE HAZARD
- **Check blade often**
- **Replace if bent or out of balance**
- **Use genuine Toro replacement blade to ensure safety and best performance. NEVER USE A WILL–FIT REPLACEMENT BLADE.**

Removing/Installing Cutting Unit

1. Stop engine and pull wire off spark plug.

2. Shift transmission into 1st gear and engage the parking brake.

3. Move height–of–cut control to lowest position.

IMPORTANT: To remove mower housing from chassis, rider may be tipped on its rear end. Before rider is tipped, gasoline must be drained from fuel tank and oil from the crankcase. Also, remove the battery so acid does not spill onto the rider

4. Drain gasoline from fuel tank: refer to Draining Gasoline From Fuel Tank, page 34

5. Drain oil from crankcase: refer to Changing/Draining Oil, steps 1–6, page 29.

6. Remove battery from chassis: refer to Removing the Battery, page 34.

7. Tip rider onto its rear end.

8. Remove blade drive belt: refer to Replacing Blade Drive Belt, page 38.

9. Remove cotter pin and clevis pin securing deck brake rod to idler bracket (Fig. 18).

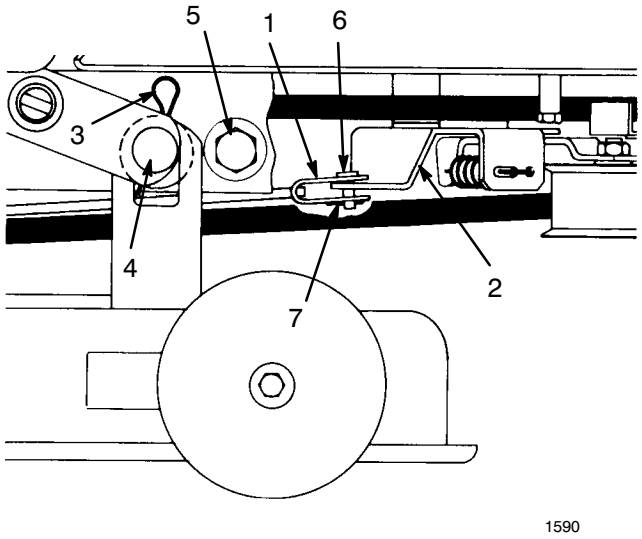

Figure 18

1. Brake rod
2. Idler bracket
3. Cotter pin
4. Mounting pin
5. Deck stops
6. Clevis pin
7. Cotter pin

10. Remove (2) hairpin cotters and washers retaining mower housing to mounting pins (Fig. 18). Grasp mower housing and move it to the side until housing slides off pins, then forward to allow front mounts to drop.

11. To reinstall mower housing, reverse removal procedure.

12. Reinstall blade drive belt: refer to Replacing Blade Drive Belt, page 38.

13. Tip rider back to its normal operating position.

14. Fill crankcase with oil: refer to Fill Crankcase With Oil, page 15.

15. Fill fuel tank with gasoline: refer to Fill Fuel Tank With Gasoline, page 11

16. Install the battery: refer to Installing the Battery, page 35.

Replacing Blade Drive Belt

IMPORTANT: To replace the blade drive belt, the rider may be tipped on its rear end. However, before the rider is tipped, drain all gasoline from fuel tank and oil from crankcase. Also remove battery so acid does not spill onto the rider.

1. Drain gasoline from fuel tank: refer to Draining Gasoline From Fuel Tank, page 34.

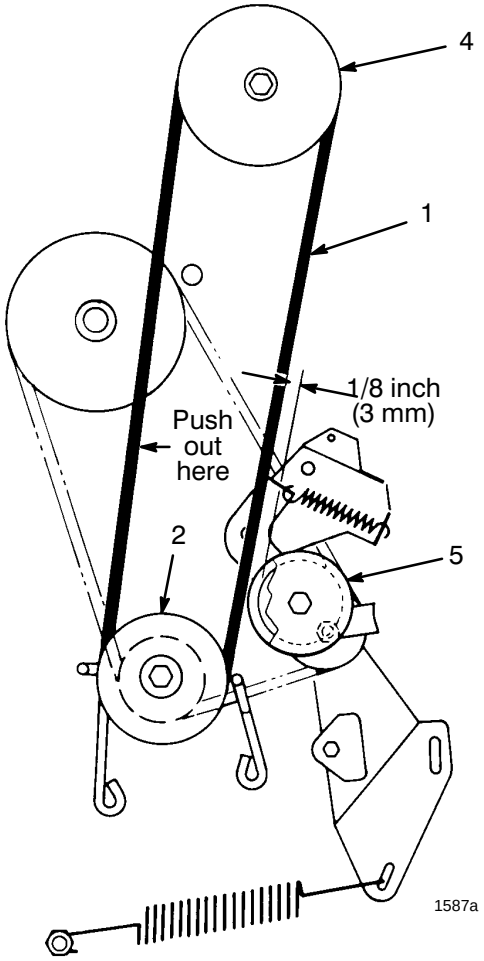

Figure 19

1. Blade drive belt
2. Engine pulley
3. Engine pulley belt guides
4. Mower housing pulley
5. Idler pulley

2. Drain oil from crankcase: refer to Changing Crankcase Oil, steps 1–6, page 29.

3. Remove battery from chassis: refer to Removing the Battery, page 34.

4. Shift transmission into 1st gear and engage the parking brake. Tip rider onto its rear end.

5. Remove capscrews, retainers and locknuts securing deck stops to each side of mower frame (Fig. 18). Slide mower housing rearward to release belt tension.

6. Move height–of–cut control to lowest position.

7. Loosen the capscrews securing (2) engine pulley belt guides and move guides away from pulley. Remove the deck drive belt from engine pulley (Fig. 19).

8. Move the deck engagement lever into ENGAGE detent so brake is away from mower housing pulley.

9. Remove (2) screws securing belt guide to mower housing and remove belt guide. Remove belt from pulley.

10. Make sure deck engagement lever is in ENGAGE detent so brake is away from mower housing pulley and install new belt around pulley. Reinstall belt guide to mower housing.

11. Route belt around engine pulley and reinstall belt guides. Make sure belt guides are within 1/8" of pulley or belt but not making contact.

12. Pushing out on belt (removing slack), as shown in fig. 19, check clearance between outside of belt and inside of idler pulley (Fig. 19). Clearance should be approximately 1/8 inch (3 mm).

13. If clearance between belt and pulley is correct, proceed to step 16, otherwise proceed to next step for adjustment procedure.

14. Locate deck engagement rod end on left side of transmission (Fig. 20). Remove clevis pin retainer and rotate clevis to lengthen or shorten rod until desired clearance between belt and pulley is attained.

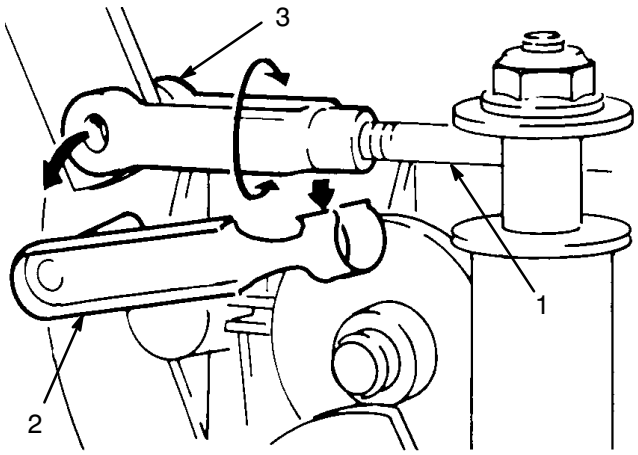

Figure 20

1. Deck engagement rod
2. Clevis pin retainer
3. Clevis

15. Reconnect clevis and recheck adjustment.

16. Tip rider back to its normal position.

17. Fill crankcase with oil: refer to Fill Crankcase with Oil, page 15.

18. Fill fuel tank with gasoline: refer to Fill Fuel Tank With Gasoline, page 11.

19. Install the battery: refer to Installing the Battery, page 35.

Replacing Traction Drive Belt

IMPORTANT: To replace the traction drive belt, the rider may be tipped on its rear end. Before the rider is tipped, drain all gasoline from fuel tank and oil from crankcase. Also remove battery so acid does not spill onto the rider.

1. Drain gasoline from fuel tank: refer to Draining Gasoline From Fuel Tank, page 34.

2. Drain oil from crankcase: refer to Changing Crankcase Oil, steps 1–6, page 29.

3. Remove battery from chassis: refer to Removing the Battery, page 34.

4. Shift transmission into 1st gear and engage the parking brake. Tip rider onto its rear end.

5. Remove blade drive belt: refer to Replacing Blade Drive Belt, page 38.

6. Remove the mower housing: refer to Installing/Removing Housing, page 37.

7. Unhook large traction spring from mounting screw (Fig. 21). Use caution when removing spring as it is heavily tensioned.

8. Unhook idler spring from idler bracket (Fig. 21).

9. Remove locknut and washer securing idler bracket to frame and remove bracket (Fig. 21).

10. Loosen the locknut on pulley until belt guide can be removed (Fig. 21). Remove belt from all pulleys.

11. Reverse procedure to reinstall belt.

Note: When reinstalling belt guide to idler pulley, make sure edge of belt guide is parallel to the frame as shown in Figure 21.

12. Install mower housing: refer to Removing/Installing Mower Housing, steps 11–14, page 37.

13. Tip rider back to its normal operating position.

14. Fill crankcase with oil: refer to Fill Crankcase with Oil, page 15.

15. Fill fuel tank with gasoline: refer to Fill Fuel Tank With Gasoline, page 11.

16. Install the battery: refer to Installing the Battery, page 35.

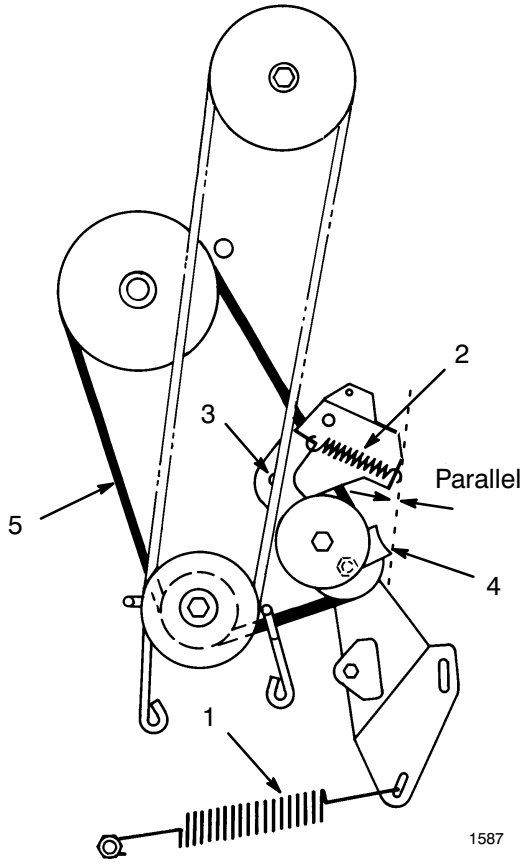

Figure 21

1. Traction spring
2. Idler spring
3. Locknut and washer securing idler bracket
4. Pulley belt guide
5. Traction drive belt

Checking/Adjusting Drive Chain

The drive chain must be adjusted to maintain 1/8 of an inch deflection at mid span between transmission and differential sprockets. Check chain deflection after the first 5 hours of operation and after every 25 hours of operation.

1. Remove two screws securing chain cover to rider chassis and lift off chain cover (Fig. 22).

IMPORTANT: If chain is worn, loose or adjusted incorrectly, chain will make a "popping" sound as it moves over the sprockets, which indicates chain needs adjusting to prevent sprocket damage. If assistance is needed, contact your local authorized Toro Dealer.

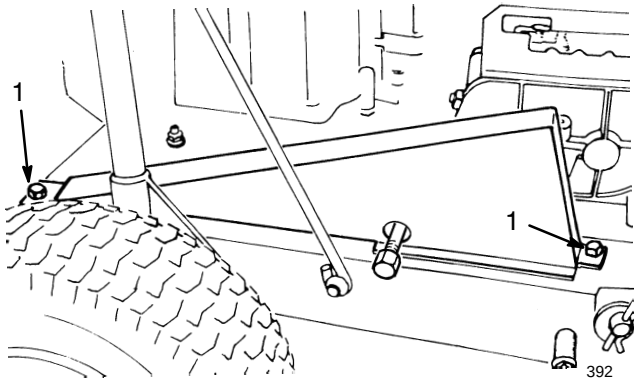

Figure 22

1. Screws

2. Check deflection of drive chain by lifting up and pressing down on chain with moderate pressure at mid span (Fig. 23). There should be 1/8 of an inch (3 mm) total deflection (Fig. 24). If deflection is not as specified, an adjustment is required—steps 3-13.

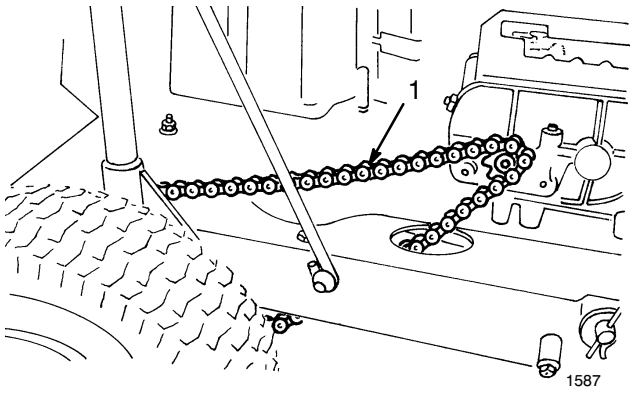

Figure 23

1. Drive chain

IMPORTANT: To adjust drive chain, the rider must be tipped on its rear end. Before the rider is tipped, drain all gasoline from fuel tank and oil from crankcase. Also remove the battery so acid does not spill onto the rider. (ALL BAGGING ATTACHMENTS MUST BE REMOVED BEFORE TIPPING RIDER.)

3. Drain gasoline from fuel tank: refer to Draining Gasoline From Fuel Tank, page 34.

4. Drain oil from crankcase: refer to Changing Crankcase Oil, page 29.

5. Remove battery from chassis: refer to Removing the Battery, page 34.

6. Shift transmission into 1st gear and engage the parking brake. Tip rider onto its rear end so chassis is on top of 2" x 4" wood blocks. Wheels must be off the floor so axle can be moved.

7. Loosen four flange nuts securing pillow blocks w/differential axle to the rider frame (Fig. 24).

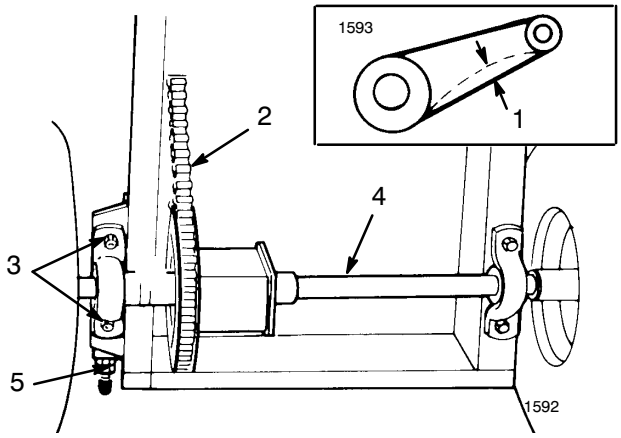

Figure 24

1. 1/8 inch (3 mm)
2. Drive chain
3. Locknuts
4. Axle
5. Chain tensioner

8. Loosen rear jam nut on chain tensioner (Fig. 24).

9. Rotate inside nut on chain tensioner until desired chain deflection is attained.

10. Tighten flange nuts securing right pillow block (chain side) to rider frame.

11. Since axle must be parallel to rear of chassis, measure distance from center of pillow blocks to rear of chassis (Fig. 24). Difference between the two measurements must not exceed 1/8 inch. If difference exceeds 1/8 inch, axle is not parallel with chassis; therefore it must be readjusted.

12. Check the deflection of the drive chain from bottom of rider (refer to step 2).

13. Tip rider back to its normal operating position and install chain cover..

14. Fill crankcase with oil: refer to Fill Crankcase With Oil, page 15

15. Fill fuel tank with gasoline: refer to Fill Fuel Tank With Gasoline, page 11

16. Install the battery: refer to Installing the Battery, page 35.

Wiring Diagram

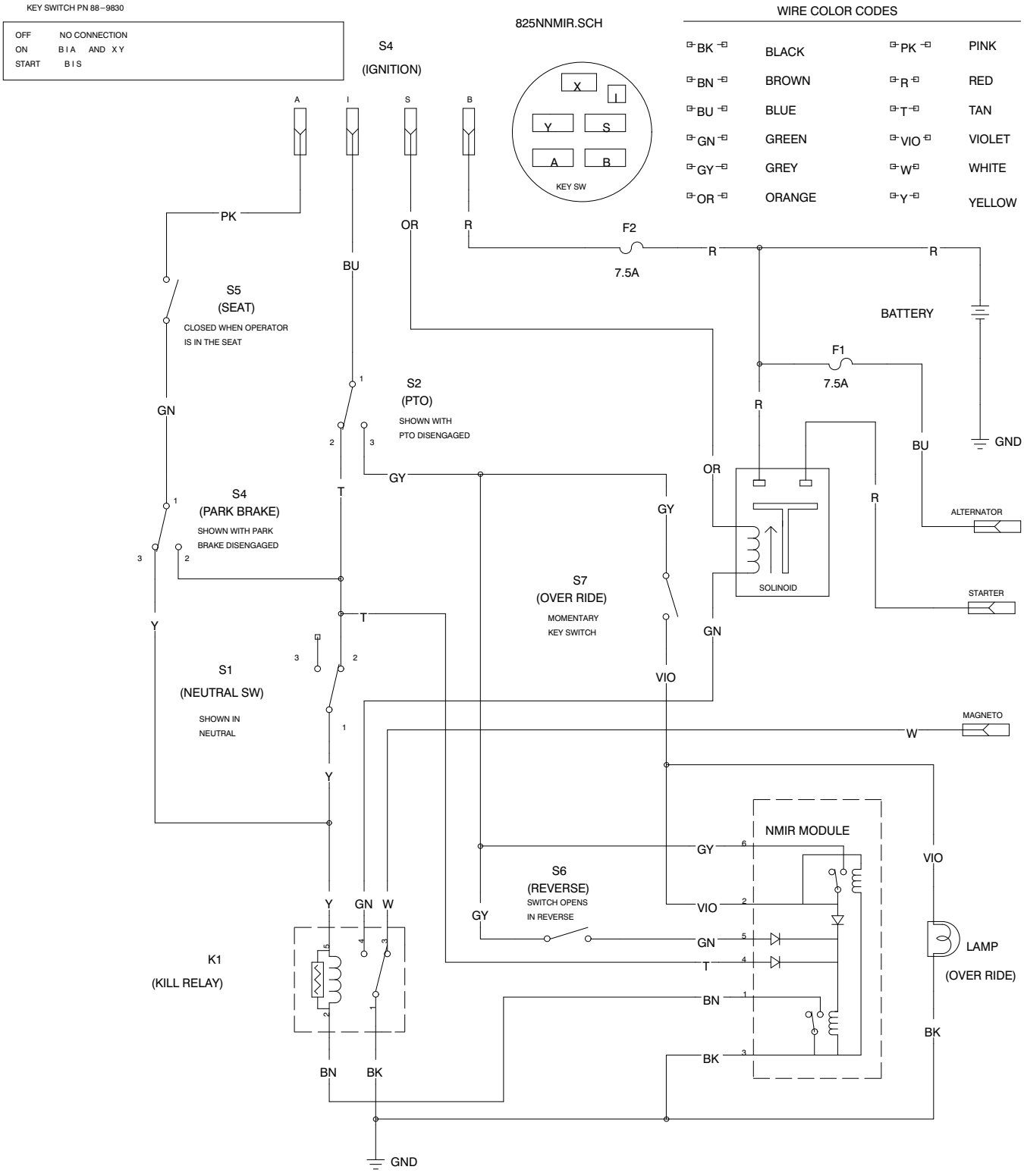

Cleaning and Storage

1. Disengage the power take off (PTO), set the parking brake, and turn the ignition key to "OFF" to stop the engine. Remove the ignition and "Key Choice" keys.

2. Remove grass clippings, dirt, and grime from the external parts of the entire machine, especially the engine. Clean dirt and chaff from the outside of the engine's cylinder head fins and blower housing.

   IMPORTANT: You can wash the machine with mild detergent and water. DO NOT PRESSURE WASH THE MACHINE. Pressure washing may damage the electrical system or wash away necessary grease at friction points. Avoid excessive use of water, especially near the control panel, lights, engine, and the battery.

3. Check the brake; refer to Brake, page 33.

4. Service the air cleaner; refer to Air Cleaner, page 28.

5. Grease the chassis; refer to Greasing and Lubrication, page 31.

6. Change the crankcase oil; refer to Engine Oil, page 29.

7. Remove the spark plug(s) and check its condition; refer to Spark Plug, page 30. With the spark plug(s) removed from the engine, pour two tablespoons of engine oil into the spark plug hole. Now use the electric starter to crank the engine and distribute the oil inside the cylinder. Install the spark plug(s) and tighten to recommended torque; refer to Installing the Spark Plug(s), page 31. Do not install the wire on the spark plug(s).

8. Remove the battery from the chassis, check the electrolyte level, and charge it fully; refer to Battery, page 34. Do not connect the battery cables to the battery posts during storage.

   IMPORTANT: The battery must be fully charged to prevent it from freezing and being damaged at temperatures below 32°F (0°C). A fully charged battery maintains its charge for about 50 days at temperatures lower than 40°F (4°C). If the temperatures will be above 40°F (4°C), check the water level in the battery and charge it every 30 days.

9. Check the tire pressure; refer to Tire Pressure, page 32.

10. For long-term storage (more than 90 days) add stabilizer/conditioner additive to fuel in the tank (1 oz. per gallon) (8 ml per liter) and proceed as follows:

    A. Run engine to distribute conditioned fuel through the fuel system (5 minutes).

    B. Stop engine, allow to cool and drain the fuel tank; refer to Fuel Tank, page 34, or operate engine until it stops.

    C. Restart engine and run until it stops. Repeat, on "CHOKE" until engine will not restart.

    D. Dispose of fuel properly. Recycle as per local codes.

    Note: Do not store stabilizer/conditioned gasoline over 90 days.

11. Check and tighten all bolts, nuts, and screws. Repair or replace any part that is damaged or defective.

12. Paint all scratched or bare metal surfaces. Paint is available from your Authorized Service Dealer.

13. Store the machine in a clean, dry garage or storage area. Remove the ignition and "Key Choice" keys from the ignition switch and keep them in a memorable place. Cover the machine to protect it and keep it clean.

Washing Underside of Mower

After each use wash the underside of the mower to prevent grass build-up for improved mulch action and clipping dispersal

1. Park the machine on a hard level surface, disengage the power take off (PTO) and turn the ignition key to “OFF” to stop the engine.

2. Attach hose coupling to the end of the mower washout fitting, turn water on high (Fig. 25).

3. Lower the mower to the lowest height-of-cut.

4. Sit on the seat and start the engine. Engage power take off (PTO) and let mower run for one to three minutes.

5. Disengage the blade, power take off (PTO) and turn the ignition key to “OFF” to stop the engine. Wait for all moving parts to stop.

6. Turn the water off, remove hose coupling from the washout fitting.

Note: If the mower is not clean after one washing, soak and let stand for 30 minutes. Then repeat process again.

7. Run mower again for one to three minutes to remove excess water.

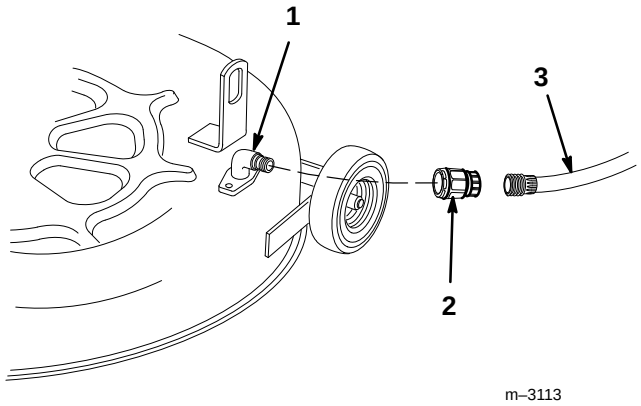

Figure 25

1. Washout port
2. Coupling
3. Hose

⚠ WARNING

POTENTIAL HAZARD

- **A broken or missing washout fitting could expose you and others to thrown objects or blade contact.**

WHAT CAN HAPPEN

- **Contact with thrown debris or blade contact will cause injury or death.**

HOW TO AVOID THE HAZARD

- **Replace broken or missing washout fitting immediately, before using nower again.**
- **Plug any hole(s) in mower with bolts and locknuts.**
- **Never put your hands or feet under the mower or through openings in the mower.**

Troubleshooting

PROBLEM	POSSIBLE CAUSES	CORRECTIVE ACTION
Starter does not crank	1. Deck engagement lever is in ENGAGE.	1. MOVE DECK ENGAGEMENT LEVER INTO DISENGAGE.
	2. Battery is dead.	2. Charge the battery.
	3. Electrical connections are corroded or loose.	3. Chcek electrical connections for good contact.
	4. Transaxle is in gear.	4. Position shift lever in neutral.
	5. Relay or switch is defective.	5. Contact Authorized Service Dealer.
Engine will not start, starts hard, or fails to keep running.	1. Fuel tank is empty.	1. Fill fuel tank with gasoline.
	2. Choke is not ON.	2. Move choke lever to ON.
	3. Air cleaner is dirty.	3. Clean or replace air cleaner element.
	4. Spark plug wire is loose or disconnected.	4. Install wire on spark plug.
	5. Spark plug is loose.	5. Install new, correctly gapped spark plug.
	6. Spark plug is pitted, fouled, or defective.	6. Set gap to 0.030” (.76 mm).
	7. Spark plug gap is incorrect.	7. Contact Authorized Service Dealer.
	8. Dirt, water, or stale fuel is in fuel system.	8. Charge the battery.
	9. Battery is dead.	9. Clean or replace the fuel cap.
	10. Vent hole in fuel tank cap is plugged.	10. Adjust the carburetor.
	11. Carburetor is adjusted incorrectly.	11. Contact Authorized Service Dealer.
	12. Module or switch is defective.	12. Tighten plug to 15 ft–lb (20.4 N–m).
	13. Electrical connections are loose.	13. Check electrical system to ensure good contact.
Engine does not idle or idles poorly	1. Air cleaner is dirty.	1. Clean air cleaner element.
	2. Idle speed is too low.	2. Adjust the carburetor.
	3. Dirt, water, or stale fuel is in the fuel system.	3. Contact Authorized Service Dealer
	4. Spark plug is pitted, fouled or defective in some other way.	4. Install new, correctly gapped spark plug.

PROBLEM	POSSIBLE CAUSES	CORRECTIVE ACTION
Blade does not rotate	1. Blade drive belt is worn, loose or broken. 2. Blade drive belt is off pulley.	1. Install new blade drive belt. 2. Install blade drive belt and check idler pulley and belt guides for correct position.
Engine loses power.	1. Engine load is excessive. 2. Air cleaner is dirty. 3. Oil level in crankcase is low. 4. Cooling fins and air passages under engine blower housing are plugged. 5. Spark plug is pitted, fouled, or gap is incorrect. 6. Vent hole in fuel cap is plugged. 7. Carburetor is adjusted incorrectly. 8. Dirt, water, or stale fuel is in fuel system.	1. Reduce ground speed. 2. Clean air cleaner element. 3. Add oil to crankcase. 4. Remove obstruction from cooling fins and air passages. 5. Install new, correctly gapped spark plug. 6. Clean or replace the fuel cap. 7. Adjust the carburetor. 8. Contact Authorized Service Dealer.
Engine overheats.	1. Engine load is excessive. 2. Oil level in crankcase is low. 3. Cooling fins and air passages under engine blower housing are plugged. 4. Carburetor is adjusted incorrectly.	1. Reduce ground speed. 2. Add oil to crankcase. 3. Remove obstruction from cooling fins and air passages. 4. Adjust the carburetor.
Abnormal vibration.	1. Engine mounting bolts are loose. 2. Loose engine pulley, idler pulley, or blade pulley. 3. Engine pulley is damaged. 4. Cutter blade is unbalanced, bent or loose. 5. Blade bolt is loose. 6. Drive belt is damaged.	1. Tighten engine mounting bolts. 2. Tighten the appropriate pulley. 3. Contact Authorized Service Dealer. 4. Install new cutter blade. 5. Tighten bolt to 45–60 ft–lb (61–81 N–m). 6. Install blade drive belt and check idler pulley and belt guides for correct position.

PROBLEM	POSSIBLE CAUSES	CORRECTIVE ACTION
Machine does not drive.	1. Traction idler is adjusted incorrectly.	1. Adjust traction drive belt.
	2. Traction belt is worn, loose or broken.	2. Contact Authorized Service Dealer.
	3. Traction belt is off pulley.	3. Contact Authorized Service Dealer.
	4. Transaxle not shifting gears.	4. Contact Authorized Service Dealer.
	5. Drive chain is off sprockets	5. Install and adjust drive chain.

Consumer Riding Products

THE TORO TOTAL COVERAGE GUARANTEE

A Full Two-Year Warranty

(Limited Warranty For Commercial Use)

What Is Covered By This Express Warranty?

The Toro Company promises to repair any TORO Product used for normal residential purposes* if defective in materials or workmanship for a period of two years from the date of purchase with the following exceptions:

- Batteries are warranted for one year

This warranty covers the cost of parts and labor as well as transportation within a 15 mile radius of the servicing dealer.

What Products Are Covered By This Warranty?

This warranty applies to all consumer riding products and their attachments.

How About Commercial Use?

TORO Consumer Products and attachments used for commercial, institutional or rental use are covered by a limited warranty for the following time periods from the date of purchase:

Products	Warranty Period
• 300 and 5xi Series Tractors	
Chassis	1 year limited warranty
Liquid Cooled Gas Engines	1 year limited warranty
Air Cooled Gas and Diesel Engines	2 year limited warranty
• All Others	90 day limited warranty

How Do You Get Warranty Service?

Should you feel your TORO Product contains a defect in material or workmanship, contact the dealer who sold you the product or any Authorized TORO Service Dealer or TORO Master Service Dealer. The Yellow Pages of your telephone directory is a good reference source. The dealer will either arrange service at his/her dealership or recommend another Authorized Service Dealer who may be more convenient. You may need proof of purchase (copy of registration card, sales receipt, etc.) for warranty validation.

If for any reason you are dissatisfied with the Service Dealer's analysis of the defect in materials or workmanship or if you need a referral to a TORO Service Dealer, please feel free to contact us at the following address:

Toro Customer Service Department
8111 Lyndale Avenue South
Bloomington, MN 55420-1196
612-888-8801
800-348-2424

What Must You Do To Keep The Warranty In Effect?

You must maintain your TORO Product by following the maintenance procedures described in the operator's manual. Such routine maintenance, whether performed by a dealer or by you, is at your expense.

What Does This Warranty Not Cover? and How Does Your State Law Relate To This Warranty?

There is no other express warranty except for special emission system coverage on some products. This express warranty does not cover:

- Cost of regular maintenance service or parts, such as filters, fuel, lubricants, tune-up parts, blade sharpening, brake and clutch adjustments.

- Any product or part which has been altered or misused or required replacement or repair due to normal wear, accidents, or lack of proper maintenance.

- Repairs necessary due to improper fuel, contaminants in the fuel system, or failure to properly prepare the fuel system prior to any period of non-use over three months.

- Pickup and delivery charges for distances beyond a 15 mile radius from an Authorized TORO Service Dealer.

All repairs covered by this warranty must be performed by an Authorized TORO Service Dealer using Toro approved replacement parts.

Repair by an Authorized TORO Service Dealer is your sole remedy under this warranty.

The Toro Company is not liable for indirect, incidental or consequential damages in connection with the use of the TORO Products covered by this warranty, including any cost or expense of providing substitute equipment or service during reasonable periods of malfunction or non-use pending completion of repairs under this warranty. Some states do not allow exclusions of incidental or consequential damages, so the above exclusion may not apply to you.

This warranty gives you specific legal rights, and you may also have other rights which vary from state to state.

* Normal residential purposes means mowing the lawn on the same lot as your home. Use at more than one location is considered commercial use and the commercial use warranty would apply.

COUNTRIES OTHER THAN THE UNITED STATES OR CANADA

Customers who have purchased TORO Products exported from the United States or Canada should contact their TORO Distributor (Dealer) to obtain guarantee policies for your country, province, or state. If for any reason you are dissatisfied with your Distributor's service or have difficulty obtaining guarantee information, contact the TORO importer. If all other remedies fail, you may contact us at The Toro Company.

Rev. 7/21/97