Form No. 3394-243 Rev C

TORO®

Count on it.

Operator's Manual

TITAN® ZX4800, ZX5400, or ZX6000 Zero-Turn-Radius Riding Mower

Model No. 74861—Serial No. 315000001 and Up
Model No. 74862—Serial No. 315000001 and Up
Model No. 74863—Serial No. 315000001 and Up

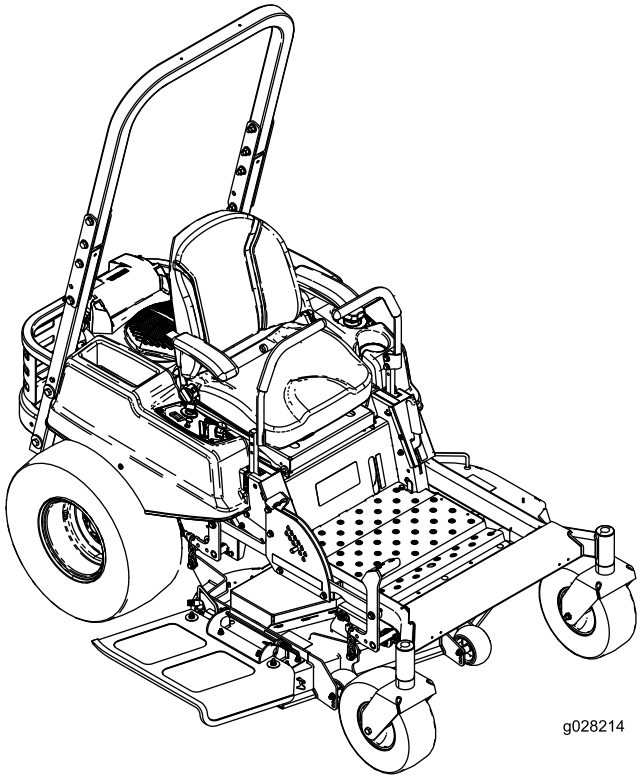

g028214

Register at www.Toro.com.
Original Instructions (EN)

3394-243 C

Important: **This engine is not equipped with a spark arrester muffler. It is a violation of California Public Resource Code Section 4442 to use or operate the engine on any forest-covered, brush-coverd, or grasss-covered land. Other states or federal areas may have similar laws.**

This spark ignition system complies with Canadian ICES-002

⚠ WARNING

Removing standard original equipment parts and accessories may alter the warranty, traction, and safety of the machine. Failure to use original Toro parts could cause serious injury or death. Making unauthorized changes to the engine, fuel or venting system, may violate EPA and CARB regulations.

Replace all parts including, but not limited to, tires, belts, blades, and fuel system components with original Toro parts.

The enclosed *Engine Owner's Manual* is supplied for information regarding the US Environmental Protection Agency (EPA) and the California Emission Control Regulation of emission systems, maintenance, and warranty. Replacements may be ordered through the engine manufacturer.

For models with stated engine horsepower, the gross horsepower of the engine was laboratory tested by the engine manufacturer in accordance with SAE J1995 and rated to J2723.

⚠ WARNING

CALIFORNIA
Proposition 65 Warning

The engine exhaust from this product contains chemicals known to the State of California to cause cancer, birth defects, or other reproductive harm.

Introduction

This machine is a ride-on, rotary-blade lawnmower intended to be used by homeowners in residential applications. It is primarily designed for cutting grass on well-maintained lawns. It is not designed for cutting brush, mowing grass and other growth alongside highways, or for agricultural uses.

Read this information carefully to learn how to operate and maintain your product properly and to avoid injury and product damage. You are responsible for operating the product properly and safely.

You may contact Toro directly at www.Toro.com for product safety and operation training materials, accessory information, help finding a dealer, or to register your product.

Whenever you need service, genuine Toro parts, or additional information, contact an Authorized Service Dealer or Toro Customer Service and have the model and serial numbers of your product ready. Figure 1 identifies the location of the model and serial numbers on the product. Write the numbers in the space provided.

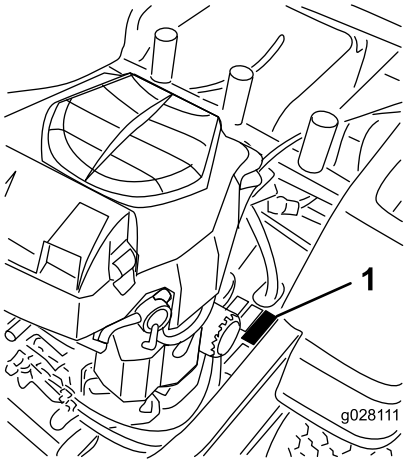

g028111

Figure 1

1. Model and serial number location

Model No. _____

Serial No. _____

© 2018—The Toro® Company
8111 Lyndale Avenue South
Bloomington, MN 55420

Contact us at www.Toro.com.
Printed in the USA.
All Rights Reserved

This manual identifies potential hazards and has safety messages identified by the safety alert symbol (Figure 2), which signals a hazard that may cause serious injury or death if you do not follow the recommended precautions.



g000502

Figure 2

1. Safety alert symbol

This manual uses 2 other words to highlight information. **Important** calls attention to special mechanical information and **Note** emphasizes general information worthy of special attention.

Contents

Safety 4
- Safe Operating Practices 4
- Toro Riding Mower Safety 6
- Slope Indicator 7
- Safety and Instructional Decals 8

Product Overview 13
- Controls 14

Operation 15
- Adding Fuel 15
- Think Safety First 17
- The Safety Interlock System 17
- Using the Rollover Protection System (ROPS) 18
- Checking the Engine-Oil Level 18
- Breaking in a New Machine 18
- Operating the Parking Brake 19
- Operating the Throttle 19
- Operating the Choke 19
- Operating the Ignition Switch 19
- Starting and Stopping the Engine 20
- Operating the Mower Blade Control Switch (PTO) 21
- Driving Forward or Backward 22
- Stopping the Machine 23
- Adjusting the Height-of-Cut 23
- Adjusting the Anti-Scalp Rollers 24
- Positioning the Seat 25
- Adjusting the Motion Control Levers 25
- Pushing the Machine by Hand 25
- Using the Side Discharge 26
- Transporting the Machine 26
- Loading the Machine 27
- Operating Tips 29

Maintenance 30
- Recommended Maintenance Schedule(s) 30
- Pre-Maintenance Procedures 31
  - Raising the Seat 31
- Lubrication 31
  - Greasing the Bearings 31
- Engine Maintenance 32
  - Servicing the Air Cleaner 32
  - Servicing the Engine Oil 33
  - Servicing the Spark Plug 35
  - Cleaning the Blower Housing 36
- Fuel System Maintenance 37
  - Replacing the Fuel Filter 37
- Electrical System Maintenance 38
  - Servicing the Battery 38
  - Servicing the Fuses 39
- Drive System Maintenance 40
  - Checking the Tire Pressure 40
- Hydraulic System Maintenance 41
  - Checking the Hydraulic Oil Level 41
  - Changing the Hydraulic System Filter and Oil 41
- Mower Deck Maintenance 44

Servicing the Cutting Blades 44
Mower Deck Leveling 46
Inspecting the Belts 48
Replacing the Mower Belt 48
Removing the Mower 49
Installing the Mower Deck 50
Replacing the Grass Deflector 51
Cleaning 52
Washing the Underside of the Mower 52
Waste Disposal 53
Storage 53
Cleaning and Storage 53
Troubleshooting 55
Schematics 57

Safety

Improper use or maintenance by the operator or owner can result in injury. To reduce the potential for injury, comply with these safety instructions and always pay attention to the safety alert symbol, which means **Caution, Warning,** or **Danger**-"personal safety instruction." Failure to comply with the instruction may result in personal injury or death.

This product is capable of amputating hands and feet and throwing objects. Always follow all safety instructions to avoid serious injury or death.

This product is designed for cutting and recycling grass or, when equipped with a grass bagger, for catching cut grass. Any use for purposes other than these could prove dangerous to user and bystanders.

Safe Operating Practices

The following instructions are adapted from ANSI standard B71.4-2012.

Training

- Read the Operator's Manual and other training material. If the operator(s) or mechanic(s) can not read English it is the owner's responsibility to explain this material to them.
- Become familiar with the safe operation of the equipment, operator controls, and safety signs.
- All operators and mechanics should be trained. The owner is responsible for training the users.
- Never let children or untrained people operate or service the equipment. Local regulations may restrict the age of the operator.
- The owner/user can prevent and is responsible for accidents or injuries occurring to people or damage to property.

Preparation

- Evaluate the terrain to determine what accessories and attachments are needed to properly and safely perform the job. Only use accessories and attachments approved by the manufacturer.
- Wear appropriate clothing including hard hat, safety glasses and hearing protection. Long hair, loose clothing or jewelry may get tangled in moving parts.
- Inspect the area where the equipment is to be used and remove all objects such as rocks, toys and wire which can be thrown by the machine.
- Check that operator's presence controls, safety switches and shields are attached and functioning

properly. Do not operate unless they are functioning properly.

Operation

- Lightning can cause severe injury or death. If lightning is seen or thunder is heard in the area, do not operate the machine; seek shelter.
- Never run an engine in an enclosed area.
- Only operate in good light, keeping away from holes and hidden hazards.
- Be sure all drives are in neutral and parking brake is engaged before starting engine. Only start engine from the operator's position.
- Slow down and use extra care on hillsides. Be sure to travel side to side on hillsides. Turf conditions can affect the machine's stability. Use caution while operating near drop-offs.
- Slow down and use caution when making turns and when changing directions on slopes.
- Never raise deck with the blades running.
- Never operate with the PTO shield, or other guards not securely in place. Be sure all interlocks are attached, adjusted properly, and functioning properly.
- Never operate with the discharge deflector raised, removed or altered, unless using a grass catcher.
- Do not change the engine governor setting or overspeed the engine.
- Stop on level ground, disengage drives, engage parking brake (if provided), shut off engine before leaving the operator's position for any reason including emptying the catchers or unclogging the chute.
- Stop equipment and inspect blades after striking objects or if an abnormal vibration occurs. Make necessary repairs before resuming operations.
- Keep hands and feet away from the cutting unit.
- Look behind and down before backing up to be sure of a clear path.
- Keep pets and bystanders away.
- Slow down and use caution when making turns and crossing roads and sidewalks. Stop blades if not mowing.
- Be aware of the mower discharge direction and do not point it at anyone.
- Do not operate the mower under the influence of alcohol or drugs.
- Use care when loading or unloading the machine into or from a trailer or truck.
- Use care when approaching blind corners, shrubs, trees, or other objects that may obscure vision.

Rollover Protection System (ROPS) - Use and Maintenance

- **Do not** remove the ROPS.
- The ROPS is an integral and effective safety device. Keep the ROPS on the machine and use the seat belt when operating the machine.
- Be certain that the seat belt can be released quickly in the event of an emergency.
- Check the area to be mowed where there are slopes, drop offs or water.
- Check carefully for overhead clearances (i.e. branches, doorways, electrical wires) before driving under any objects and do not contact them.
- Keep the ROPS in safe operating condition by periodically thoroughly inspecting for damage and keeping all mounting fasteners tight.
- Replace a damaged ROPS. Do not repair or revise.
- Any alterations to a ROPS must be approved by the manufacturer.

Safe handling of fuels

- To avoid personal injury or property damage, use extreme care in handling gasoline. Gasoline is extremely flammable and the vapors are explosive.
- Extinguish all cigarettes, cigars, pipes, and other sources of ignition.
- Use only an approved fuel container.
- Never remove fuel cap or add fuel with the engine running.
- Allow engine to cool before refueling.
- Never refuel the machine indoors.
- Never store the machine or fuel container where there is an open flame, spark, or pilot light such as on a water heater or on other appliances.
- Never fill containers inside a vehicle or on a truck or trailer bed with a plastic liner. Always place containers on the ground away from your vehicle before filling.
- Remove equipment from the truck or trailer and refuel it on the ground. If this is not possible, then refuel such equipment with a portable container, rather than from a fuel dispenser nozzle.
- Keep the nozzle in contact with the rim of the fuel tank or container opening at all times until fueling is complete. Do not use a nozzle lock open device.
- If fuel is spilled on clothing, change clothing immediately.
- Never overfill fuel tank. Replace fuel cap and tighten securely.

Maintenance and storage

- Disengage drives, set parking brake, stop engine and remove key or disconnect spark-plug wire. Wait for all movement to stop before adjusting, cleaning or repairing.
- Clean grass and debris from cutting unit, drives, mufflers, and engine to help prevent fires. Clean up oil or fuel spillage.
- Let engine cool before storing and do not store near flame.
- Shut off fuel while storing or transporting. Do not store fuel near flames or drain indoors.
- Park the machine on level ground. Set the parking brake. Never allow untrained personnel to service the machine.
- Use jack stands to support components when required.
- Carefully release pressure from components with stored energy.
- Disconnect the battery or remove spark-plug wire before making any repairs. Disconnect the negative terminal first and the positive last. Reconnect the positive first and negative last.
- Use care when checking blades. Wrap the blade(s) or wear thickly-padded gloves, and use caution when servicing them. Only replace blades. Never straighten or weld them.
- Keep hands and feet away from moving parts. If possible, do not make adjustments with the engine running.
- Keep all parts in good working condition and all hardware tightened. Replace all worn or damaged decals.

Hauling

- Use care when loading or unloading the machine into a trailer or truck.
- Use full width ramps for loading machine into trailer or truck.
- Tie the machine down securely using straps, chains, cable, or ropes. Both front and rear straps should be directed down and outward from the machine.

Toro Riding Mower Safety

The following list contains safety information specific to Toro products or other safety information that you must know that may not be included in the ANSI standards.

- Use only Toro approved attachments. Warranty may be voided if used with unapproved attachments.
- If loading the machine onto a trailer or truck, use a single, full-width ramp only. The ramp angle should not exceed 15 degrees.

Towing Safety

- Do not attach towed equipment except at the hitch point.
- Follow the attachment manufacturer's recommendation for weight limits for towed equipment and towing on slopes. Towed weight must not exceed the weight of the machine, operator, and ballast. Use counterweights or wheel weights as described in the attachment, or in the pulling machine *Operator's Manual*.
- Never allow children or others in or on towed equipment.
- On slopes, the weight of the towed equipment may cause loss of traction, increased risk of rollover, and loss of control. Reduce the towed weight and slow down.
- Stopping distance increases with the weight of the towed load. Travel slowly and allow extra distance to stop.
- Make wide turns to keep the attachment clear of the machine.

Slope Indicator

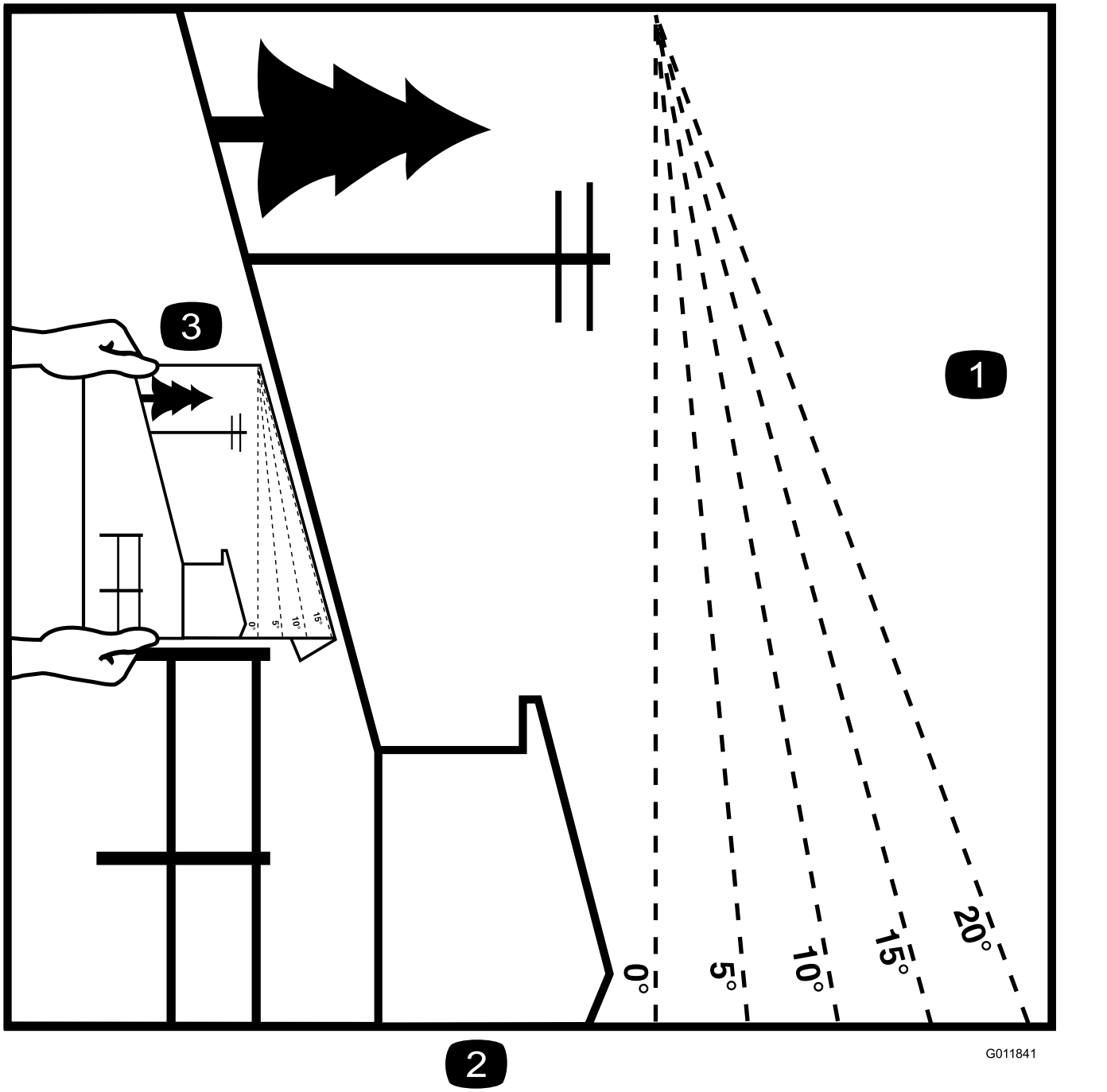

Figure 3

This page may be copied for personal use.

1. The maximum slope you can safely operate the machine on is **15 degrees**. Use the slope chart to determine the degree of slope of hills before operating. **Do not operate this machine on a slope greater than 15 degrees.** Fold along the appropriate line to match the recommended slope.
2. Align this edge with a vertical surface, a tree, building, fence pole, etc.
3. Example of how to compare slope with folded edge.

Safety and Instructional Decals

Safety decals and instructions are easily visible to the operator and are located near any area of potential danger. Replace any decal that is damaged or lost.

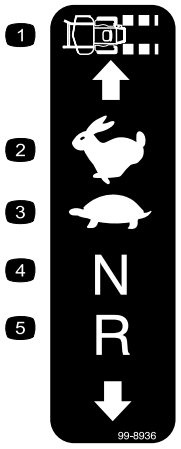

decal99-8936

99-8936

1. Machine speed
2. Fast
3. Slow
4. Neutral
5. Reverse

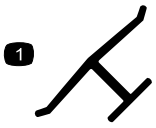

decaloemmarkt

Manufacturer's Mark

1. Indicates the blade is identified as a part from the original machine manufacturer.

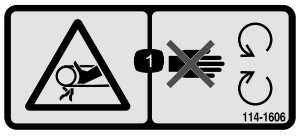

decal114-1606

114-1606

1. Entanglement hazard, belt—keep all guards in place.

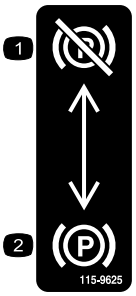

decal115-9625

115-9625

1. Parking brake—disengaged
2. Parking brake—engaged

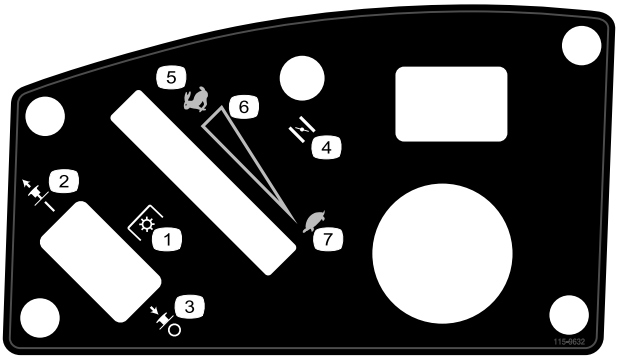

decal115-9632

115-9632

1. Power take-off (PTO), Blade control switch on some models
2. Blade control switch—On
3. Blade control switch—Off
4. Choke
5. Fast
6. Continuous variable setting
7. Slow



decalbatterysymbols

Battery Symbols

Some or all of these symbols are on your battery

1. Explosion hazard
2. No fire, open flame, or smoking.
3. Caustic liquid/chemical burn hazard
4. Wear eye protection
5. Read the *Operator's Manual.*
6. Keep bystanders a safe distance from the battery.
7. Wear eye protection; explosive gases can cause blindness and other injuries
8. Battery acid can cause blindness or severe burns.
9. Flush eyes immediately with water and get medical help fast.
10. Contains lead; do not discard.

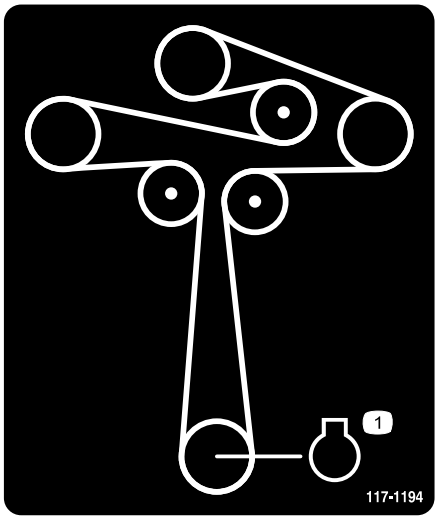

decal117-1194

117-1194

1. Engine

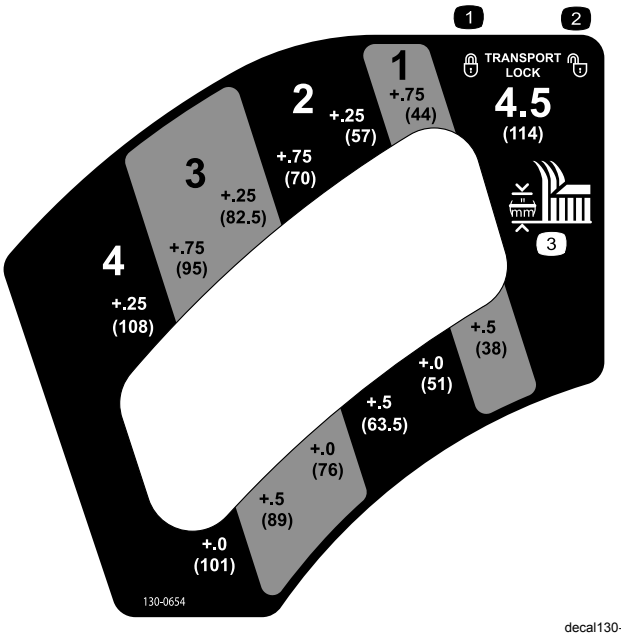

decal130-0654

130-0654

1. Transport—lock
2. Transport—unlock
3. Height-of-cut

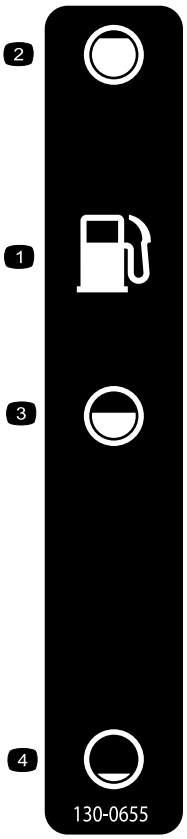

decal130-0655

130-0655

1. Fuel tank
2. Full
3. Half
4. Empty

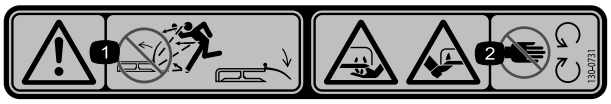

decal130-0731

130-0731

1. Warning—thrown object hazard; keep the deflector shield in place.
2. Cutting hazard of hand or foot, mower blade—keep away from moving parts.

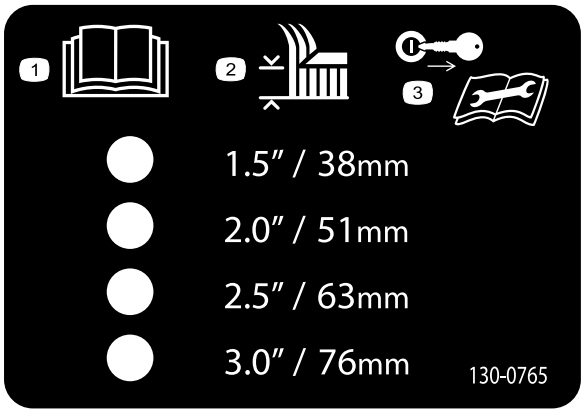

decal130-0765

130-0765

1. Read the *Operator's Manual*.
2. Height-of-cut selection
3. Remove the key from the ignition and read the *Operator's Manual* before permorning maintenance.

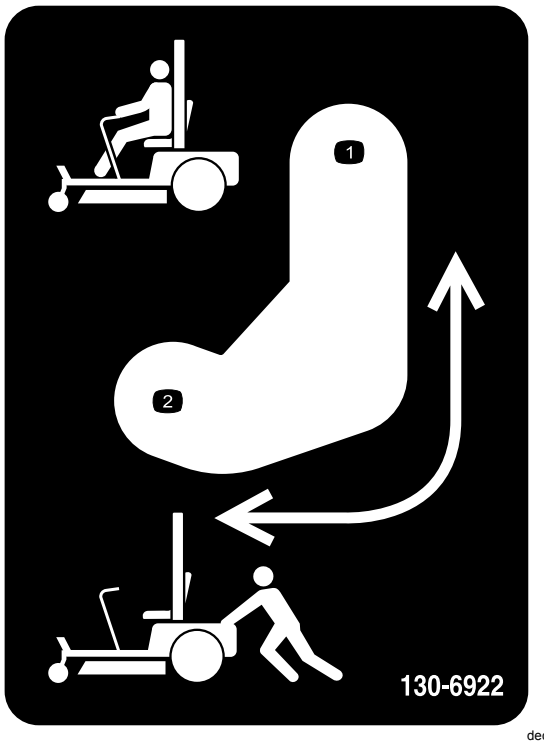

decal130-6922

130-6922

1. Bypass lever position for operating the machine.
2. Bypass lever position for pushing the machine.

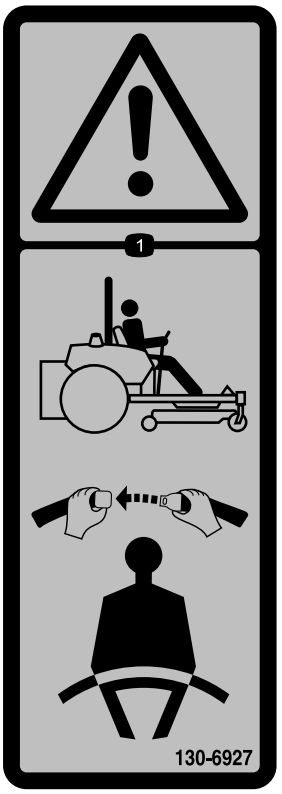

decal130-6927

130-6927

1. Warning—always use the ROPS and wear the seat belt when seated in the operator's position.

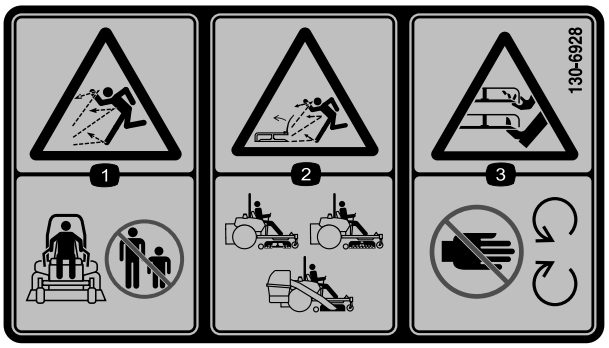

decal130-6928

130-6928

1. Thrown object hazard—keep bystanders away from the machine.
2. Thrown object hazard, mower—do not operate the without deflector, discharge cover, or grass collection system in place.
3. Cutting/dismemberment of hand or foot—stay away from moving parts.

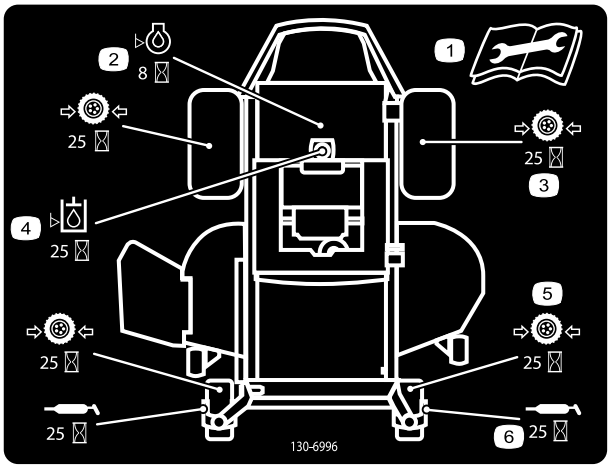

decal130-6996

130-6996

1. Read the *Operator's Manual* for information on maintenance.
2. Check the engine oil every 8 hours
3. Check the drive wheel tire pressure every 25 hours
4. Check the hydraulic oil every 25 hours
5. Check the caster wheel tire pressure every 25 hours
6. Lubricate the caster wheel every 25 hours

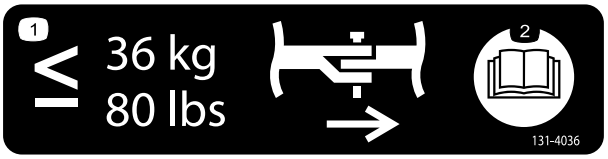

decal131-4036

131-4036

1. The maximum drawbar pull is 36 kg (80 lb).
2. Read the *Operator's Manual*.

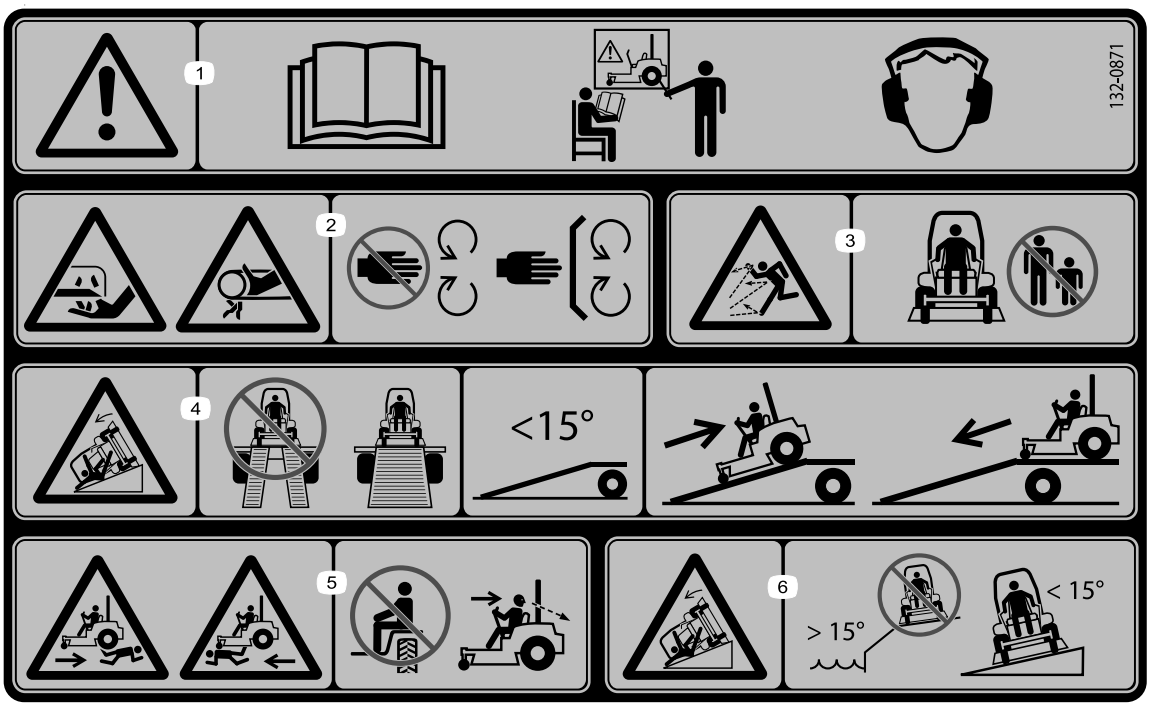

decal132-0871

132-0871

Note: This machine complies with the industry standard stability test in the static lateral and longitudinal tests with the maximum recommended slope indicated on the decal. Review the instructions for operating the machine on slopes in the *Operator's Manual* as well as the conditions in which you would operate the machine to determine whether you can operate the machine in those conditions on that day and at that site. Changes in the terrain can result in a change in slope operation for the machine. If possible, keep the cutting units lowered to the ground while operating the machine on slopes. Raising the cutting units while operating on slopes can cause the machine to become unstable.

1. Warning—read the *Operator's Manual*; do not operate this machine unless you are trained; wear hearing protection.
2. Cutting, dismembering, and entanglement hazard—keep hands away from moving parts; keep all guards and shields in place.
3. Thrown object hazard—keep bystanders away.
4. Ramp hazard—when loading onto a trailer, do not use dual ramps; only use a singular ramp wide enough for the machine and that has an incline less than 15°; back up the ramp (in reverse) and drive forward off the ramp.
5. Bodily harm hazard—do not carry passengers; look behind you when mowing in reverse.
6. Tipping hazard on slopes—do not use on slopes near open water; do not use on slopes greater than 15°.

Product Overview

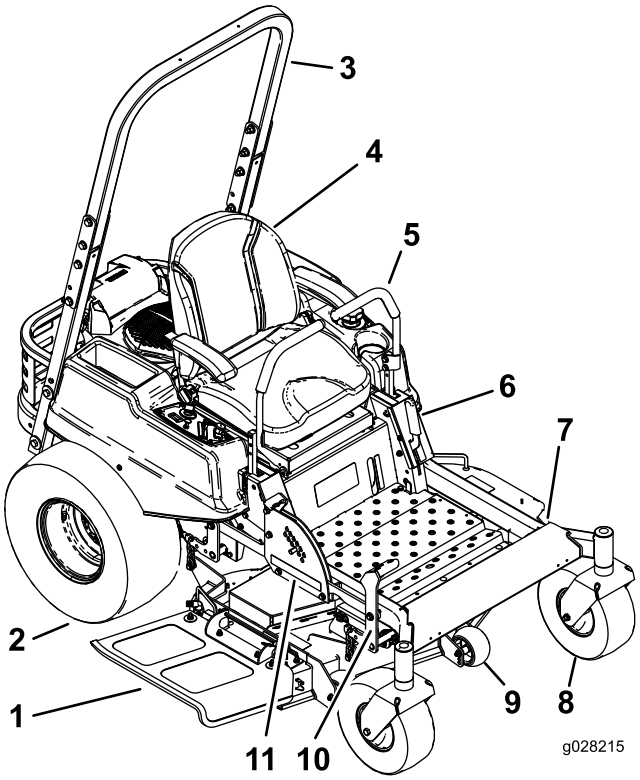

g028215

Figure 4

1. Grass deflector
2. Drive wheel
3. Roll over protection system (ROPS)
4. Operator seat
5. Motion control levers
6. Parking brake
7. Footrest
8. Front caster wheel
9. Anti-scalp roller
10. Mower-deck lift pedal
11. Height-of-cut handle

Controls

Become familiar with all the controls before you start the engine and operate the machine (Figure 5).

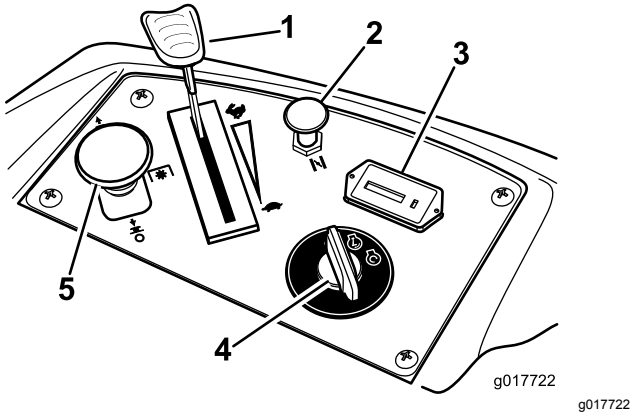

Figure 5

1. Throttle control
2. Choke
3. Hour meter
4. Ignition switch
5. Blade control switch (PTO)

Ignition Switch

The ignition switch has three positions: **Start, Run** and **Off**. The key will turn to Start and move back to Run upon release. Turning the key to the Off position will stop the engine; however, always remove the key when leaving the machine to prevent the engine from accidentally starting (Figure 5).

Throttle Control

The throttle control is variable between **Fast** and **Slow**. Moving throttle lever forward will increase engine speed and moving throttle lever to the rear will decrease engine speed. Moving the throttle forward into the detent is full throttle (Figure 5).

Choke

Use the choke to start a cold engine. Pull the choke knob up to engage it. Push down on the choke knob to disengage it.

Blade-Control Switch (Power Take-Off)

The blade control switch engages and disengages power to the mower blades (Figure 5).

Hour Meter

The hour meter records the number of hours the blades have operated. It operates when the blade control switch (PTO) is engaged. Use these times for scheduling regular maintenance (Figure 5).

Fuel Gauge

The fuel window located below the operator position can be used to verify the level of gasoline in the tank (Figure 6).

Motion Control Levers

The motion control levers are speed sensitive controls of independent wheel motors. Moving a lever forward or backward turns the wheel on the same side forward or in reverse; wheel speed is proportional to the amount the lever is moved. Move the control levers outward from the center to the neutral lock position and exit the machine (Figure 4). Always position the motion control levers into the neutral lock position when you stop the machine or leave it unattended.

Parking Brake Lever

The parking brake lever is located on left side of the console (Figure 4). The brake lever engages a parking brake on the drive wheels. Pull the lever up and rearward to engage the brake. Push the lever forward and down to disengage the brake.

Foot Pedal Deck Lift System

The foot pedal deck lift system allows the operator to lower and raise the deck from the seated position. The operator can use the foot pedal to lift the deck briefly to avoid obstacles or lock the deck in the highest height-of-cut or transport position (Figure 4).

Height-of-Cut Lever

The height-of-cut lever works with the foot pedal to lock the deck in a specific cutting height. Only adjust the height of cut while machine is not moving (Figure 4).

Attachments/Accessories

A selection of Toro approved attachments and accessories is available for use with the machine to enhance and expand its capabilities. Contact your Authorized Service Dealer or Distributor or go to www.Toro.com for a list of all approved attachments and accessories.

Operation

Note: Determine the left and right sides of the machine from the normal operating position.

Adding Fuel

- For best results, use only clean, fresh (less than 30 days old), unleaded gasoline with an octane rating of 87 or higher ((R+M)/2 rating method).
- **Ethanol**: Gasoline with up to 10% ethanol (gasohol) or 15% MTBE (methyl tertiary butyl ether) by volume is acceptable. Ethanol and MTBE are not the same. Gasoline with 15% ethanol (E15) by volume is not approved for use. **Never use gasoline that contains more than 10% ethanol by volume**, such as E15 (contains 15% ethanol), E20 (contains 20% ethanol), or E85 (contains up to 85% ethanol). Using unapproved gasoline may cause performance problems and/or engine damage which may not be covered under warranty.
- **Do not** use gasoline containing methanol.
- **Do not** store fuel either in the fuel tank or fuel containers over the winter unless a fuel stabilizer is used.
- **Do not** add oil to gasoline.

⚠ DANGER

In certain conditions, gasoline is extremely flammable and highly explosive. A fire or explosion from gasoline can burn you and others and can damage property.

- **Fill the fuel tank outdoors, in an open area, when the engine is cold. Wipe up any gasoline that spills.**
- **Never fill the fuel tank inside an enclosed trailer.**
- **Do not fill the fuel tank completely full. Add gasoline to the fuel tank until the level is 6 to 13 mm (1/4 to 1/2 inch) below the bottom of the filler neck. This empty space in the tank allows gasoline to expand.**
- **Never smoke when handling gasoline, and stay away from an open flame or where gasoline fumes may be ignited by a spark.**
- **Store gasoline in an approved container and keep it out of the reach of children. Never buy more than a 30-day supply of gasoline.**
- **Do not operate without entire exhaust system in place and in proper working condition.**

⚠ DANGER

In certain conditions during fueling, static electricity can be released causing a spark which can ignite the gasoline vapors. A fire or explosion from gasoline can burn you and others and can damage property.

- **Always place gasoline containers on the ground away from your vehicle before filling.**
- **Do not fill gasoline containers inside a vehicle or on a truck or trailer bed because interior carpets or plastic truck bed liners may insulate the container and slow the loss of any static charge.**
- **When practical, remove gas-powered equipment from the truck or trailer and refuel the equipment with its wheels on the ground.**
- **If this is not possible, then refuel such equipment on a truck or trailer from a portable container, rather than from a gasoline dispenser nozzle.**
- **If a gasoline dispenser nozzle must be used, keep the nozzle in contact with the rim of the fuel tank or container opening at all times until fueling is complete.**

⚠ WARNING

Gasoline is harmful or fatal if swallowed. Long-term exposure to vapors can cause serious injury and illness.

- **Avoid prolonged breathing of vapors.**
- **Keep face away from nozzle and gas tank or conditioner opening.**
- **Keep gas away from eyes and skin.**

Using Stabilizer/Conditioner

Use a fuel stabilizer/conditioner in the machine to provide the following benefits:

- Fuel stabilizer/conditioner keeps gasoline fresh during storage of 90 days or less. When storing the machine for longer periods, drain the fuel system.
- It cleans the engine while it runs
- It eliminates gum-like varnish buildup in the fuel system, which causes hard starting

Important: **Do not use fuel additives containing methanol or ethanol.**

Add the correct amount of gas stabilizer/conditioner to the gas.

Note: A fuel stabilizer/conditioner is most effective when mixed with fresh gasoline. To minimize the chance of varnish deposits in the fuel system, use fuel stabilizer at all times.

Fuel Gauge

Use the fuel window below the operator to verify the level of gasoline before filling the tank (Figure 6).

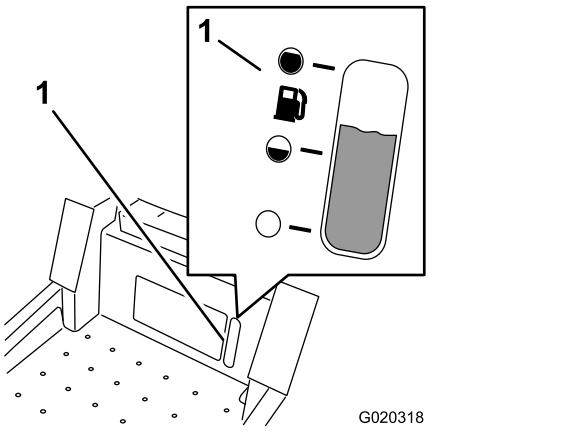

Figure 6

1. Fuel gauge window

Filling the Fuel Tank

Make sure the engine is shut off and the motion controls are in the park position.

Important: **Do not overfill fuel tank. Fill the fuel tank to the bottom of the filler neck. The empty space in the tank allows the fuel to expand. Overfilling may result in fuel leakage or damage to the engine or emission system.**

1. Clean around the fuel tank cap and remove the cap.

   Note: You can use the fuel window below the operating position verify the presence of gasoline before filling the tank (Figure 6).

2. **Slowly** add regular, unleaded gasoline until the fuel reaches the base of the filler neck Figure 7.

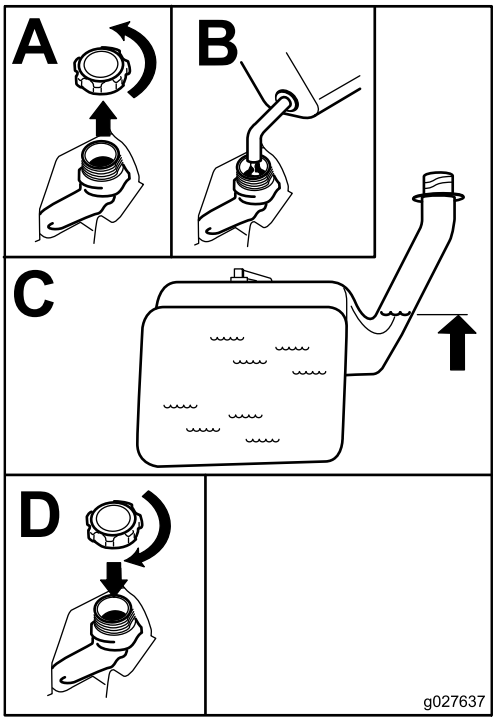

Figure 7

3. Install the fuel tank cap securely and tighten until it “clicks.” Wipe up any gasoline that may have spilled.

Think Safety First

Please carefully read all of the safety instructions and decals in the safety section. Knowing this information could help you, your family, pets or bystanders avoid injury.

⚠ DANGER

Mowing on wet grass or steep slopes can cause sliding and loss of control.

Wheels dropping over edges can cause rollovers, which may result in serious injury, death or drowning.

A loss of traction is a loss of steering control.

To avoid loss of control and possibility of rollover:

- **Do not mow near drop-offs or near water.**
- **Do not mow slopes greater than 15 degrees.**
- **Reduce speed and use extreme caution on slopes.**
- **When mowing slopes, gradually work from lower to higher areas on the incline.**
- **Avoid sudden turns or rapid speed changes.**
- **Turn up, into an incline when changing directions on slopes. Turning down the slope reduces traction.**
- **Attachments change the handling characteristics of the machine. Use extra caution when using attachments with the machine.**

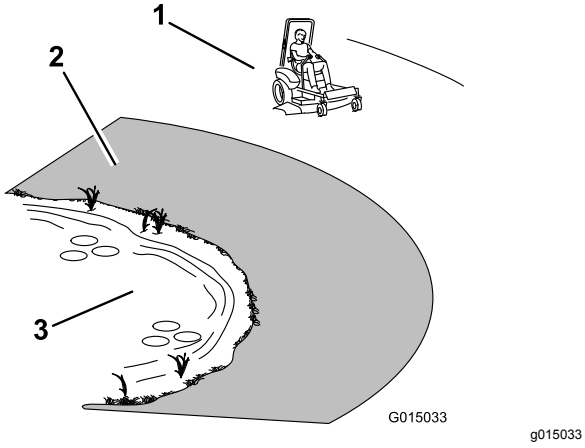

Figure 8

1. Safe Zone-use the machine here
2. Use walk behind mower and/or hand trimmer near drop-offs and water.
3. Water

⚠ CAUTION

This machine produces sound levels in excess of 85 dBA at the operators ear and can cause hearing loss through extended periods of exposure.

Wear hearing protection when operating this machine.

The use of protective equipment for eyes, ears, hands, feet, and head is recommended.

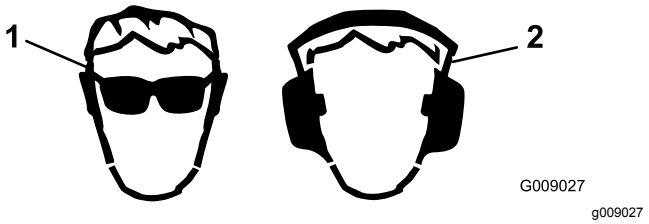

Figure 9

1. Wear safety glasses
2. Wear hearing protection

The Safety Interlock System

⚠ WARNING

If safety interlock switches are disconnected or damaged the machine could operate unexpectedly causing personal injury.

- **Do not tamper with the interlock switches.**
- **Check the operation of the interlock switches daily and replace any damaged switches before operating the machine.**

Understanding the Safety Interlock System

The safety interlock system is designed to prevent the engine from starting unless:

- The parking brake is engaged.
- The blades are disengaged.
- The motion control levers are in the neutral lock position.

The safety interlock system also is designed to stop the engine when the control levers are out of the neutral lock position with the parking brake on or if you rise from the seat when the blades are engaged.

Testing the Safety Interlock System

Test the safety interlock system before you use the machine each time. If the safety system does not

operate as described below, have an Authorized Service Dealer repair the safety system immediately.

1. While sitting on the seat, engage the parking brake and move the blade control switch to On. Try starting the engine; the engine should not crank.
2. While sitting on the seat, engage the parking brake and move the blade control switch to Off. Move either motion control lever (forward or reverse). Try starting the engine; the engine should not crank. Repeat with the other motion control lever.
3. While sitting on the seat, engage the parking brake, move the blade control switch to Off, and lock the motion control levers in neutral. Start the engine. While the engine is running, release the parking brake, engage the blade control switch, and rise slightly from the seat; the engine should stop.
4. While sitting on the seat, engage the parking brake, move the blade control switch to Off, and lock the motion control levers in neutral. Start the engine. While the engine is running, center the motion controls; the engine should stop.

Using the Rollover Protection System (ROPS)

⚠ WARNING

To avoid injury or death from rollover: keep the roll bar installed and use the seat belt.

⚠ WARNING

There is no rollover protection when the roll bar is removed.

- **Drive slowly and carefully.**
- **Check carefully for overhead clearances (i.e. branches, doorways, electrical wires) before driving under any objects and do not contact them.**

Checking the Engine-Oil Level

Before you start the engine and use the machine, check the oil level in the engine crankcase; refer to Checking the Engine-Oil Level (page 33).

Breaking in a New Machine

New engines take time to develop full power. Mower decks and drive systems have higher friction when new, placing additional load on the engine. Allow 40 to 50 hours of break-in time for new machines to develop full power and best performance.

Operating the Parking Brake

Always set the parking brake when you stop the machine or leave it unattended.

Setting the Parking Brake

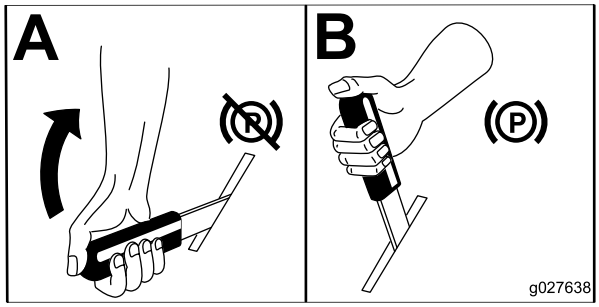

g027638

Figure 10

Releasing the Parking Brake

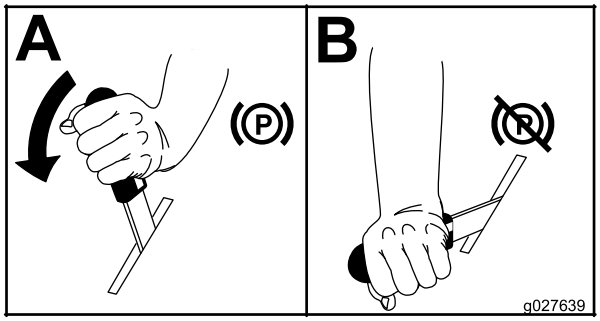

g027639

Figure 11

Operating the Throttle

The throttle control can be moved between **Fast** and **Slow** positions (Figure 12).

Always use the fast position when turning on the mower deck with the blade control switch (PTO).

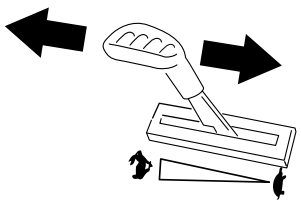

g028222

g028222

Figure 12

Operating the Choke

Use the choke to start a cold engine as follows:

1. Pull up on the choke knob to engage the choke before using the ignition switch (Figure 13).
2. Push down on the choke to disengage the choke after the engine has started (Figure 13).

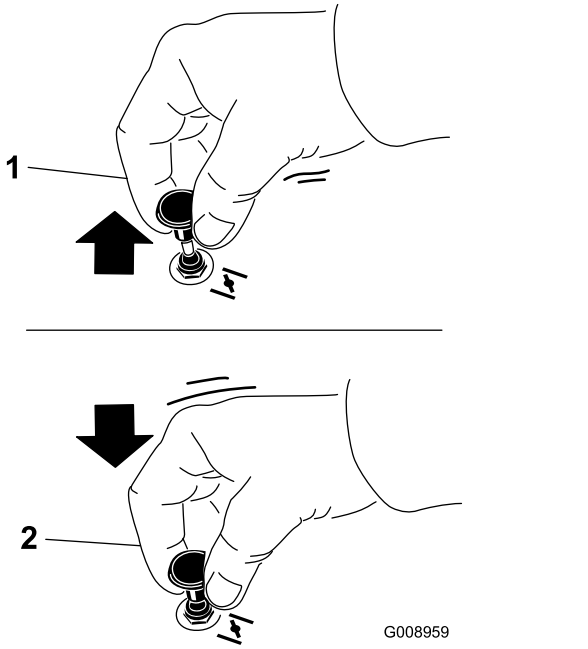

g008959

Figure 13

1. On
2. Off

Operating the Ignition Switch

1. Turn the ignition key to the Start position (Figure 14). When the engines starts, release the key.

   Important: **Do not engage starter for more than 5 seconds at a time. If the engine fails to start allow a 15 second cool-down period between attempts. Failure to follow these instructions can burn out the starter motor.**

   Note: Additional starting cycles may be required when starting the engine for the first time after the fuel system has been without fuel completely.

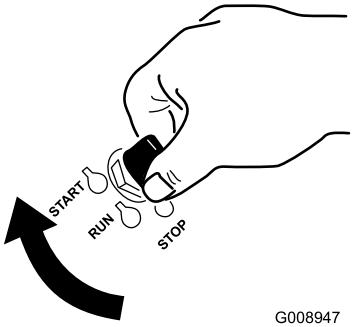

g008947

Figure 14

2. To stop the engine, turn the ignition key to the stop position.

Starting and Stopping the Engine

Starting the Engine

Note: A warm or hot engine may not require choking (Figure 15).

Important: **Do not engage starter for more than 5 seconds at a time. If the engine fails to start allow a 15 second cool-down period between attempts. Failure to follow these instructions can burn out the starter motor.**

Note: If the fuel system was depleted of fuel—add fuel to the machine and use additional starting cycles when starting the engine.

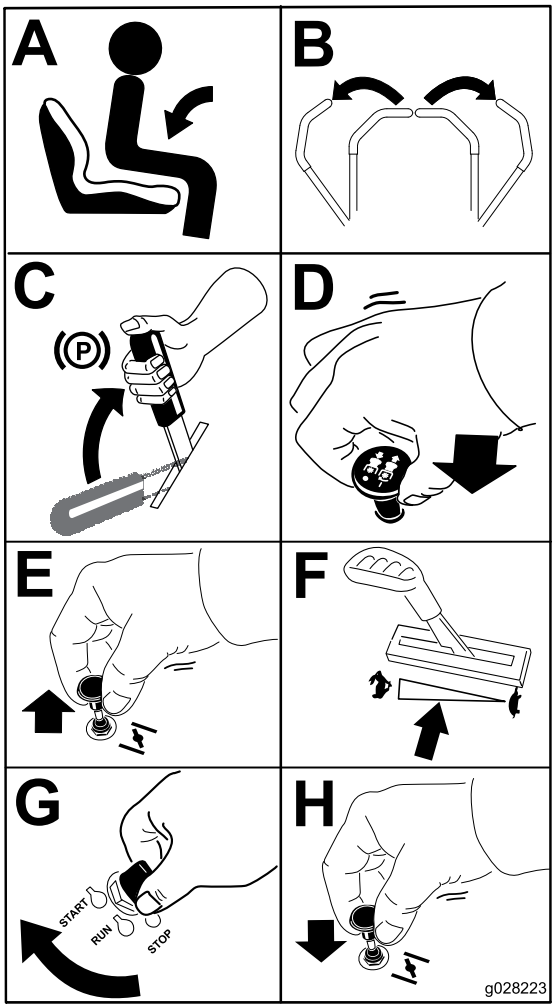

g028223

Figure 15

Stopping the Engine

⚠ CAUTION

Injury can occur if children or bystanders move or attempt to operate the machine while it is unattended.

Always remove the ignition key and set the parking brake when leaving the machine unattended, even if just for a few minutes.

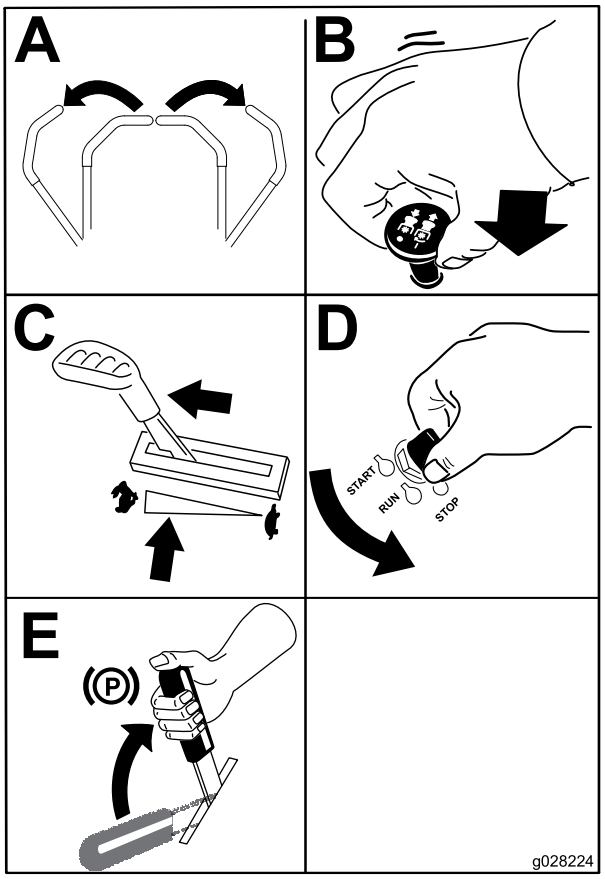

Figure 16

Operating the Mower Blade Control Switch (PTO)

The blade control switch (PTO) starts and stops the mower blades and any powered attachments.

Engaging the Blade Control Switch (PTO)

Engage the blade control switch (PTO) with the throttle position at Fast.

Note: Engaging the blade control switch (PTO) with the throttle position at half or less will cause excessive wear to the drive belts.

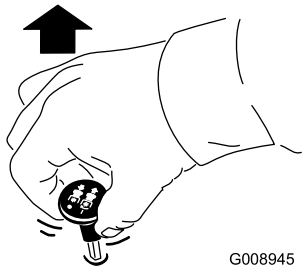

Figure 17

Disengaging the Blade Control Switch (PTO)

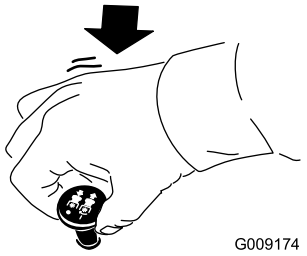

Figure 18

Driving Forward or Backward

The throttle control regulates the engine speed as measured in rpm (revolutions per minute). Place the throttle control in the fast position for best performance. Always operate in the full throttle position when mowing.

⚠ CAUTION

Machine can spin very rapidly. Operator may lose control of machine and cause personal injury or damage to machine.

- **Use caution when making turns.**
- **Slow the machine down before making sharp turns.**

Using the Motion Control Levers

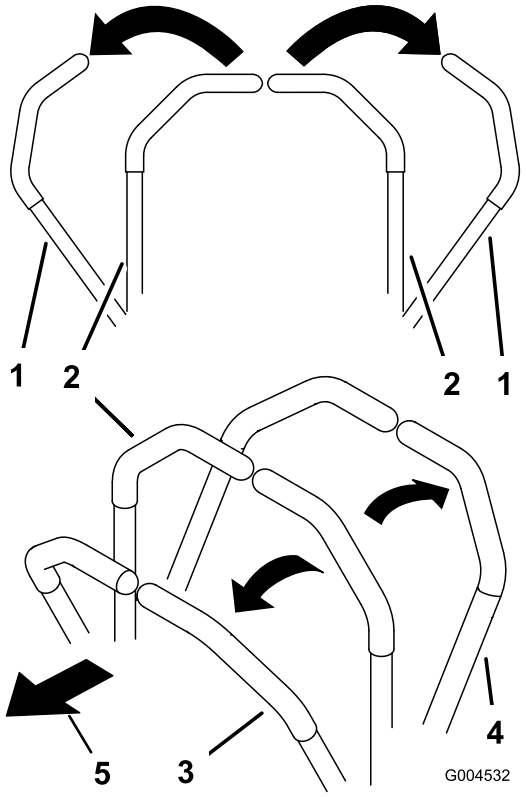

g004532

Figure 19

1. Motion control lever-neutral lock position
2. Center, unlocked position
3. Forward
4. Backward
5. Front of machine

Driving Forward

Note: The engine will kill if the traction control levers are moved with the parking brake engaged.

1. Release the parking brake; refer to Releasing the Parking Brake (page 19).
2. Move the levers to the center, unlocked position.
3. To go forward, slowly push the motion control levers forward (Figure 20).

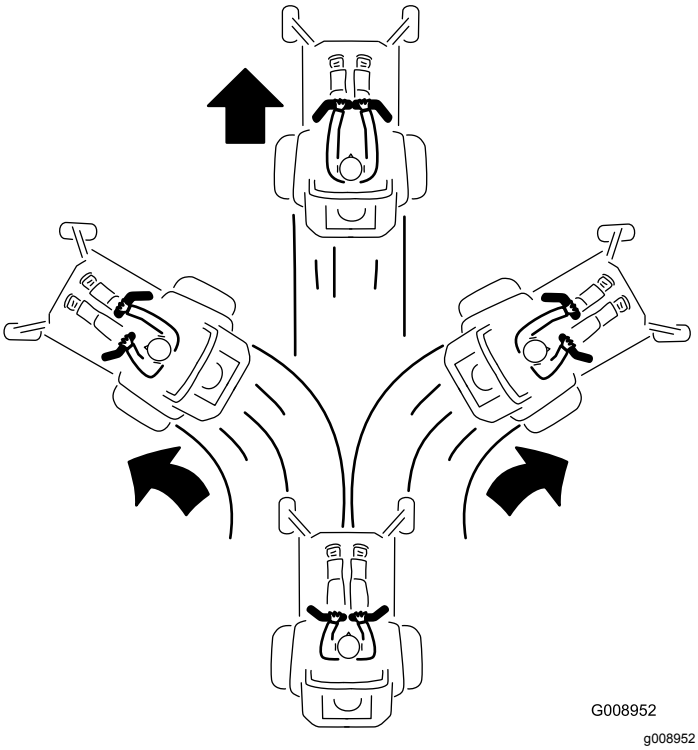

g008952

Figure 20

Driving Backward

1. Move the levers to the center, unlocked position.
2. To go backward, slowly pull the motion control levers rearward (Figure 21).

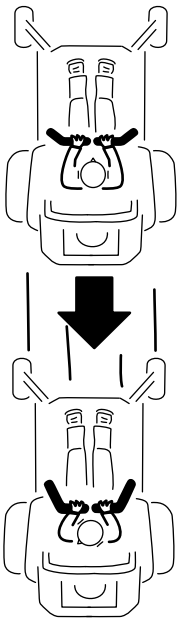

Figure 21

Stopping the Machine

⚠ CAUTION

Children or bystanders may be injured if they move or attempt to operate the machine while it is unattended.

Always remove the ignition key and set the parking brake when leaving the machine unattended, even if just for a few minutes.

To stop the machine, move the traction control levers to neutral and move to locked position, disengage the blade control switch (PTO), move the throttle between the half and full position, and turn the ignition key to off.

Set the parking brake when you leave the machine; refer to Setting the Parking Brake (page 19). Remember to remove the key from the ignition switch.

Adjusting the Height-of-Cut

The machine is equipped with a foot pedal deck lift system. The operator can use the foot pedal to lift the deck briefly to avoid obstacles or lock the deck in the highest height-of-cut or transport position. The operator can use the height of cut lever with the foot pedal to lock the deck in a specific cutting height.

Using the Foot Pedal Deck Lift System

- Press the pedal down to raise the deck; continue to press the pedal until the deck is locked in the transport position (Figure 22).
- Push on the deck lift pedal with your foot and pull the transport lock handle rearward to disengage the transport lock (Figure 22).

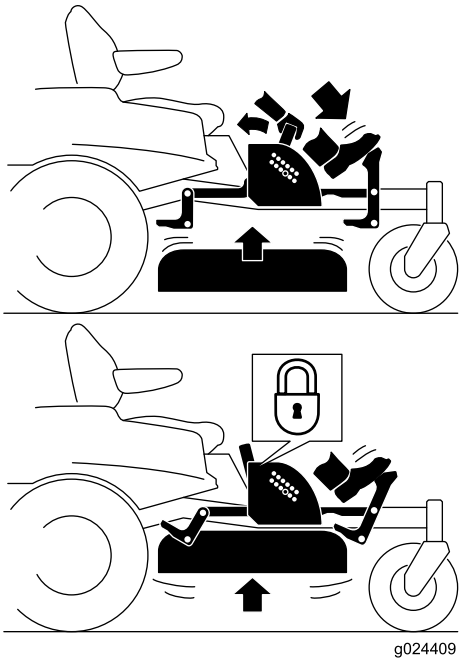

Figure 22

Transport Lock Position

Adjusting the Height-of-Cut

The height-of-cut can be adjusted from 38 to 114 mm (1-1/2 to 4-1/2 inch) in 6 mm (1/4 inch) increments by relocating the height-of-cut pin into different hole locations.

1. Push on the deck lift pedal with your foot and raise the mower deck to the transport lock position (also the 114 mm (4-1/2 inch) cutting height position) (Figure 23).
2. To adjust, remove the pin from the height-of-cut bracket (Figure 23).
3. Select a hole in the height-of-cut system corresponding to the height-of-cut desired and insert the pin (Figure 23).
4. Push on the deck lift pedal with your foot and pull the handle rearward to disengage the transport lock (Figure 22).
5. Lower the deck slowly until the lever makes contact with the pin.

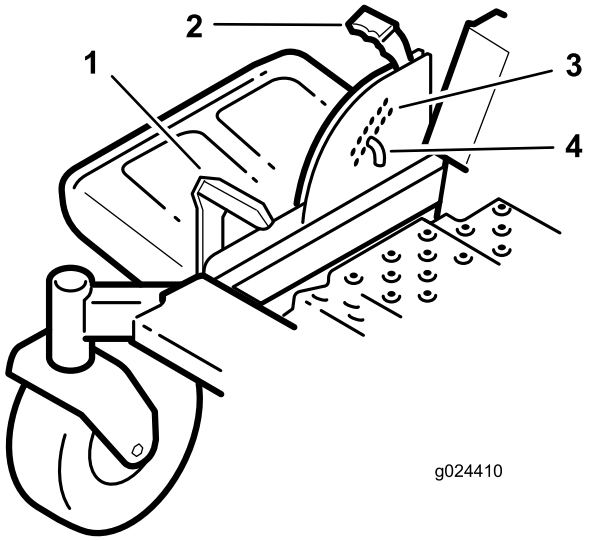

g024410

Figure 23

1. Deck lift pedal
2. Handle
3. Height-of-cut positions
4. Pin

Adjusting the Anti-Scalp Rollers

Whenever you change the height-of-cut, it is recommended to adjust the height of the anti-scalp rollers.

1. Disengage the blade control switch (PTO), move the motion control levers to the neutral lock position and set the parking brake.
2. Stop the engine, remove the key, and wait for all moving parts to stop before leaving the operating position.
3. Remove the flange nut, anti-scalp roller and bolt from the bracket (Figure 24).

   Note: Keep the bolt and anti-scalp roller together when removing.

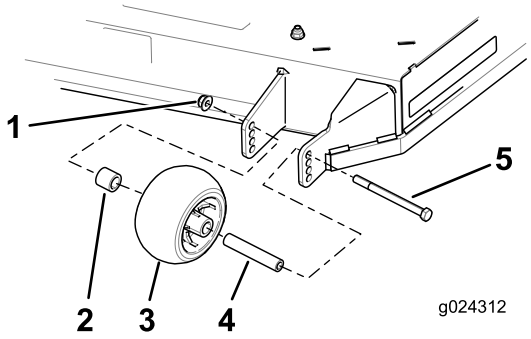

g024312

Figure 24

1. Flange Nut
2. Spacer
3. Anti-scalp roller
4. Bushing
5. Bolt

4. Align the bolt and anti-scalp roller in the hole of the bracket that matched the closest height of cut position (Figure 24).
5. Insert the bolt into the bracket hole and secure the bolt and anti-scalp roller with the flange nut (Figure 24).

Positioning the Seat

The seat can move forward and backward. Position the seat where you have the best control of the machine and are most comfortable.

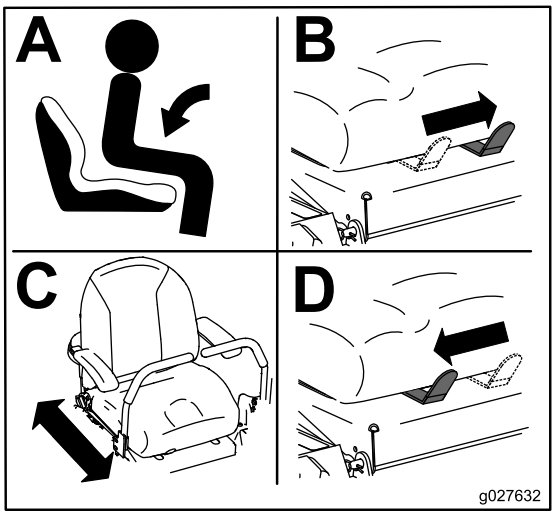

g027632

Figure 25

Adjusting the Motion Control Levers

Adjusting the Height

Note: Repeat the adjustment for the opposite control lever.

The motion control levers can be adjusted higher or lower for maximum operator comfort (Figure 26).

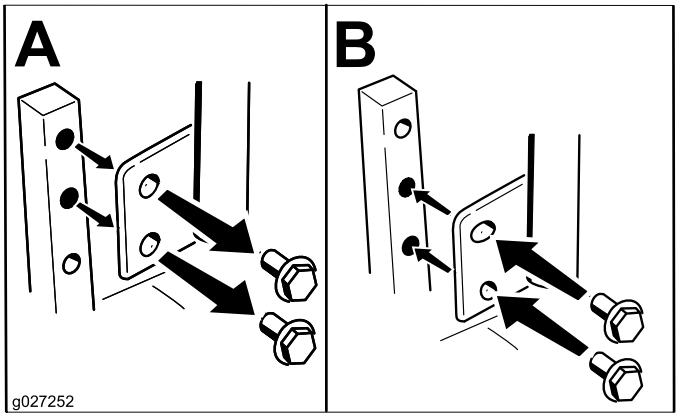

g027252

Figure 26

Adjusting the Tilt

The motion control levers can be tilted fore or aft for maximum operator comfort.

1. Loosen the upper bolt holding the control lever to the control arm shaft.
2. Loosen the lower bolt just enough to pivot the control lever fore or aft. Tighten both bolts to secure the control in the new position.
3. Repeat the adjustment for the opposite control lever.

Pushing the Machine by Hand

Important: **Always push the machine by hand. Never tow the machine because damage may occur.**

To Push the Machine

1. Park the machine on a level surface and disengage the blade control switch.
2. Move the motion control levers outward to neutral lock position, stop the engine, remove the key, and wait for all moving parts to stop before leaving the operating position. Make sure the parking brake is **disengaged**.
3. Do this procedure on each side of the machineFigure 27.

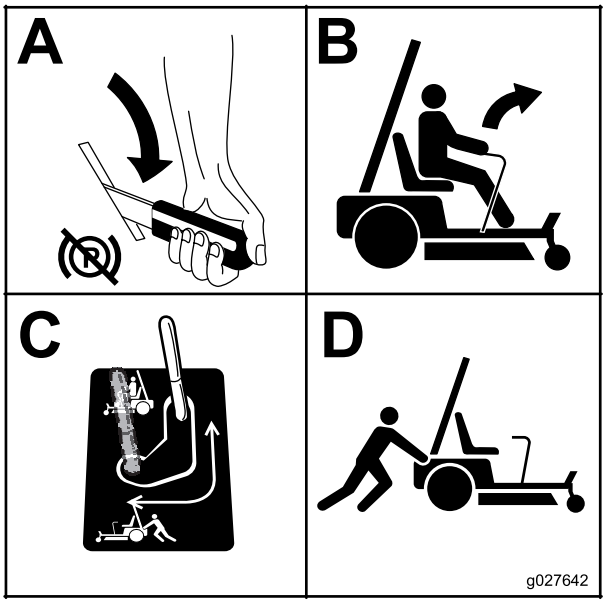

g027642

Figure 27

To Operate the Machine

Move the bypass to the position for operating the machine (Figure 27) to engage the wheel motors.

Using the Side Discharge

The mower has a hinged grass deflector that disperses clippings to the side and down toward the turf.

⚠ DANGER

Without a grass deflector, discharge cover, or complete grass catcher assembly mounted in place, you and others are exposed to blade contact and thrown debris. Contact with rotating mower blade(s) and thrown debris will cause injury or death.

- **Never remove the grass deflector from the mower because the grass deflector routes material down toward the turf. If the grass deflector is ever damaged, replace it immediately.**
- **Never put your hands or feet under the mower.**
- **Never try to clear the discharge area or mower blades unless you move the blade control switch (PTO) to the off position, rotate the ignition key to off and remove the key.**
- **Make sure the grass deflector is in the down position.**

Transporting the Machine

Use a heavy-duty trailer or truck to transport the machine. Ensure that the trailer or truck has all necessary brakes, lighting, and marking as required by law. Please carefully read all the safety instructions. Knowing this information could help you, your family, pets, or bystanders avoid injury.

⚠ WARNING

Driving on the street or roadway without turn signals, lights, reflective markings, or a slow moving vehicle emblem is dangerous and can lead to accidents causing personal injury.

Do not drive machine on a public street or roadway.

To transport the machine:

1. If using a trailer, connect it to the towing vehicle and connect the safety chains.
2. If applicable, connect the trailer brakes.
3. Load the machine onto the trailer or truck.
4. Stop the engine, remove the key, set the brake, and close the fuel valve.
5. Tie down the machine near the front caster wheels and the rear bumper (Figure 28).

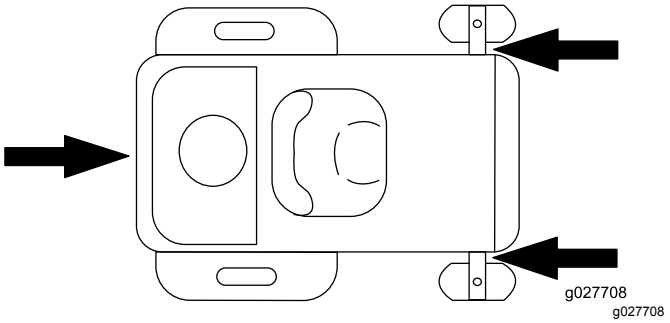

Figure 28

Loading the Machine

Use extreme caution when loading or unloading machines onto a trailer or a truck. Use a full-width ramp that is wider than the machine for this procedure. Back up ramps and drive forward down ramps (Figure 29).

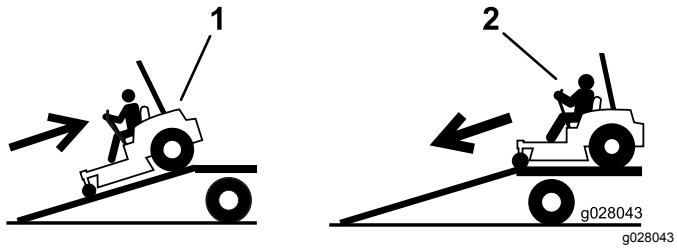

Figure 29

1. Back up ramps
2. Drive forward down ramps

Important: **Do not use narrow individual ramps for each side of the machine.**

Ensure the ramp is long enough so that the angle with the ground does not exceed 15 degrees (Figure 30). On flat ground, this requires a ramp to be at least four times (4X) as long as the height of the trailer or truck bed to the ground. A steeper angle may cause mower components to get caught as the unit moves from the ramp to the trailer or truck. Steeper angles may also cause the machine to tip or lose control. If loading on or near a slope, position the trailer or truck so that it is on the down side of the slope and the ramp extends up the slope. This will minimize the ramp angle.

⚠ WARNING

Loading a machine onto a trailer or truck increases the possibility of tip-over and could cause serious injury or death.

- **Use extreme caution when operating a machine on a ramp.**
- **Ensure that the ROPS is in the up position and use the seat belt when loading or unloading the machine. Ensure that the ROPS will clear the top of an enclosed trailer.**
- **Use only a full-width ramp; do not use individual ramps for each side of the machine.**
- **Do not exceed a 15-degree angle between the ramp and the ground or between the ramp and the trailer or truck.**
- **Ensure the length of ramp is at least four times (4X) as long as the height of the trailer or truck bed to the ground. This will ensure that ramp angle does not exceed 15 degrees on flat ground.**
- **Back up ramps and drive forward down ramps.**
- **Avoid sudden acceleration or deceleration while driving the machine on a ramp as this could cause a loss of control or a tip-over situation.**

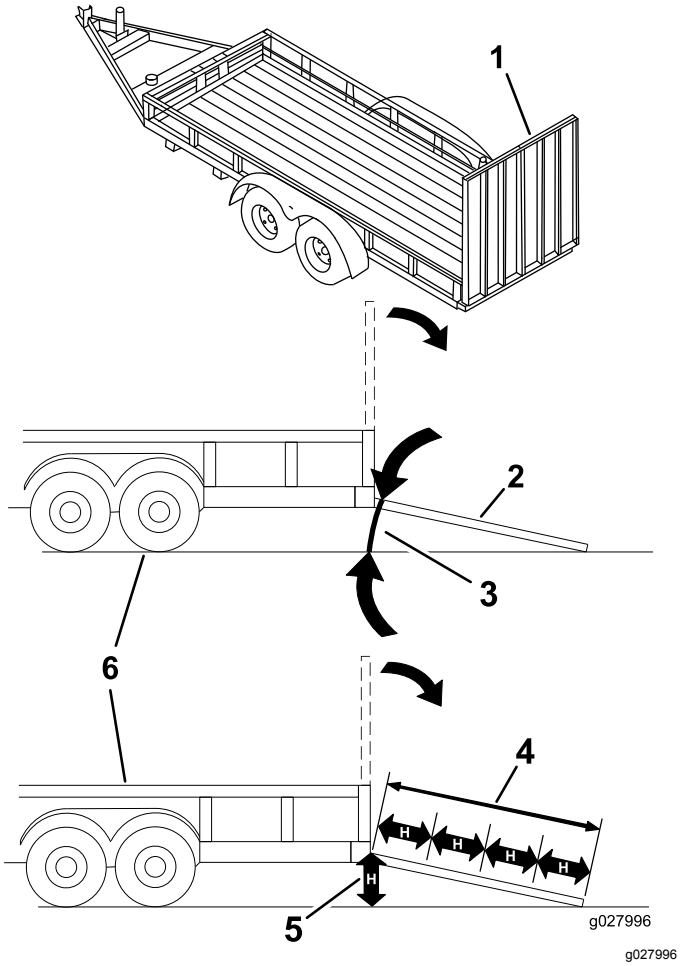

Figure 30

1. Full-width ramp in stowed position
2. Side view of full-width ramp in loading position
3. Not greater than 15 degrees
4. Ramp is at least four times (4X) as long as the height of the trailer or truck bed to the ground
5. H= height of the trailer or truck bed to the ground
6. Trailer

Operating Tips

Fast Throttle Setting

For best mowing and maximum air circulation, operate the engine at the fast throttle position. Air is required to thoroughly cut grass clippings, so do not set the height-of-cut so low as to totally surround the mower by uncut grass. Always try to have one side of the mower free from uncut grass, which allows air to be drawn into the mower.

Cutting a Lawn for the First Time

Cut grass slightly longer than normal to ensure the cutting height of the mower does not scalp any uneven ground. However, the cutting height used in the past is generally the best one to use. When cutting grass longer than six inches tall, you may want to cut the lawn twice to ensure an acceptable quality of cut.

Cut 1/3 of the Grass Blade

It is best to cut only about 1/3 of the grass blade. Cutting more than that is not recommended unless grass is sparse, or it is late fall when grass grows more slowly.

Mowing Direction

Alternate mowing direction to keep the grass standing straight. This also helps disperse clippings which enhances decomposition and fertilization.

Mow at Correct Intervals

Normally, mow every four days. But remember, grass grows at different rates at different times. So to maintain the same cutting height, which is a good practice, mow more often in early spring. As the grass growth rate slows in mid summer, mow less frequently. If you cannot mow for an extended period, first mow at a high cutting height; then mow again two days later at a lower height setting.

Cutting Speed

To improve cut quality, use a slower ground speed in certain conditions.

Avoid Cutting Too Low

If the cutting width of the mower is wider than the mower you previously used, raise the cutting height to ensure that uneven turf is not cut too short.

Long Grass

If the grass is ever allowed to grow slightly longer than normal, or if it contains a high degree of moisture, raise the cutting height higher than usual and cut the grass at this setting. Then cut the grass again using the lower, normal setting.

When Stopping

If the machine's forward motion must be stopped while mowing, a clump of grass clippings may drop onto your lawn. To avoid this, move onto a previously cut area with the blades engaged.

Keep the Underside of the Mower Clean

Clean clippings and dirt from the underside of the mower after each use. If grass and dirt build up inside the mower, cutting quality will eventually become unsatisfactory.

Blade Maintenance

Maintain a sharp blade throughout the cutting season because a sharp blade cuts cleanly without tearing or shredding the grass blades. Tearing and shredding turns grass brown at the edges, which slows growth and increases the chance of disease. Check the cutter blades daily for sharpness, and for any wear or damage. File down any nicks and sharpen the blades as necessary. If a blade is damaged or worn, replace it immediately with a genuine Toro replacement blade.

Maintenance

Recommended Maintenance Schedule(s)

Maintenance Service Interval	Maintenance Procedure
After the first 50 hours	• Change the hydraulic system filter and oil.
Before each use or daily	• Check the safety interlock system. • Check the air cleaner for dirty, loose or damaged parts. • Check the engine-oil level. • Clean the blower housing (more often under extremely dusty, dirty conditions). • Check the mower blades. • Inspect the grass deflector for damage
After each use	• Clean the mower housing.
Every 25 hours	• Grease all lubrication points. • Service or replace the air-cleaner foam element (more often under extremely dusty, dirty conditions). • Check tire pressure. • Check the hydraulic oil level in the expansion tank.
Every 50 hours	• Inspect the belts for cracks and wear.
Every 100 hours	• Replace the air-cleaner paper element (more often under extremely dusty, dirty conditions). • Change the engine oil and the engine-oil filter. • Clean the cooling fins (more often under extremely dusty, dirty conditions). • Replace the fuel filter (more often under dusty, dirty conditions).
Every 400 hours	• Change the hydraulic system filter and oil.
Every 500 hours	• Replace the spark plug(s).
Monthly	• Check the battery charge.
Yearly or before storage	• Paint chipped surfaces. • Check all maintenance procedures listed above before storage.

Important: **Refer to your engine operator's manual for additional maintenance procedures.**

⚠ CAUTION

If you leave the key in the ignition switch, someone could accidently start the engine and seriously injure you or other bystanders.

Remove the key from the ignition and disconnect the wire from the spark plug before you do any maintenance. Set the wire aside so that it does not accidentally contact the spark plug.

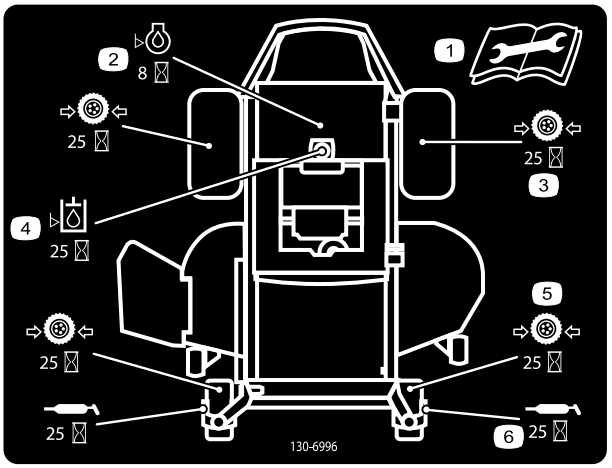

decal130-6996

Figure 31
Located on the seat pan underside

1. Read the *Operator's Manual* for information on maintenance.
2. Check the engine oil every 8 hours
3. Check the drive wheel tire pressure every 25 hours
4. Check the hydraulic oil every 25 hours
5. Check the caster wheel tire pressure every 25 hours
6. Lubricate the caster wheel every 25 hours

Pre-Maintenance Procedures

Raising the Seat

Make sure the motion control levers are locked in the neutral lock position. Lift the seat forward.

The following components can be accessed by raising the seat:

- Service decal
- Fuses
- Battery and cables

Lubrication

Greasing the Bearings

Service Interval: Every 25 hours—Grease all lubrication points.

Grease Type: No. 2 General Purpose Lithium Base Grease

1. Park the machine on a level surface and disengage the blade control switch.
2. Move the motion control levers outward to the neutral lock position, stop the engine, remove the key, and wait for all moving parts to stop before leaving the operating position.
3. Clean the grease fittings with a rag (Figure 31 and Figure 32). Make sure to scrape any paint off of the front of the fitting(s).

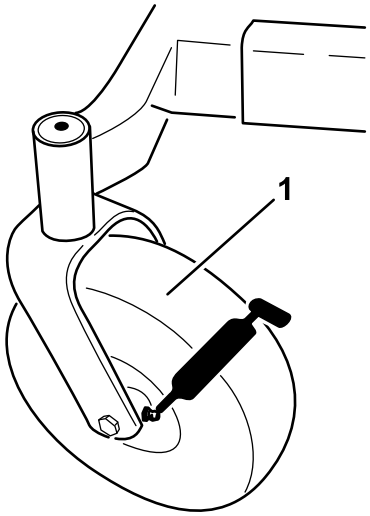

G009949

g009949

Figure 32

1. Front caster tire

4. Connect a grease gun to each fitting (Figure 32 and Figure 31). Pump grease into the fittings until grease begins to ooze out of the bearings.
5. Wipe up any excess grease.

Engine Maintenance

⚠ WARNING

Contact with hot surfaces may cause personal injury.

Keep hands, feet, face, clothing and other body parts away the muffler and other hot surfaces.

Servicing the Air Cleaner

Service Interval: Before each use or daily—Check the air cleaner for dirty, loose or damaged parts.

Every 25 hours—Service or replace the air-cleaner foam element (more often under extremely dusty, dirty conditions).

Every 100 hours—Replace the air-cleaner paper element (more often under extremely dusty, dirty conditions).

This engine is equipped with a replaceable, high density paper and foam air-cleaner element. Check the air cleaner daily or before starting the engine. Check for a buildup of dirt and debris around the air-cleaner system. Keep this area clean. Also, check for loose or damaged components. Replace all bent or damaged air-cleaner components.

Note: Operating the engine with loose or damaged air-cleaner components could allow unfiltered air into the engine, causing premature wear and failure.

Note: Service the air cleaner more often under extremely dusty, dirty conditions.

Removing the Elements

1. Rotate the latches outward.
2. Remove the cover to access the air-cleaner elements (Figure 33).

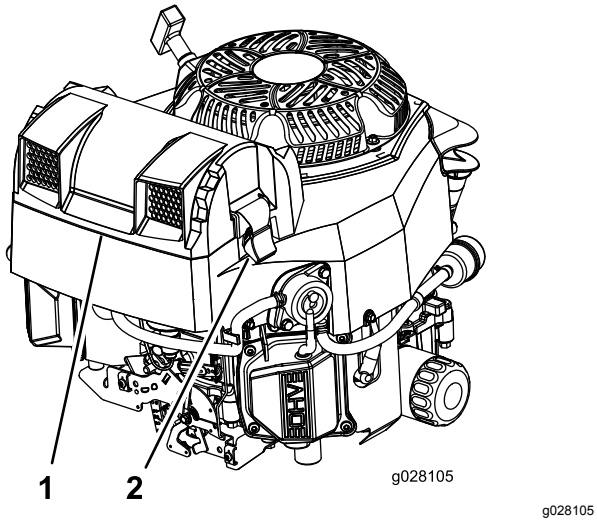

g028105

Figure 33

1. Air-cleaner cover
2. Air-cleaner latch

3. Remove the foam and paper elements (Figure 34).
4. Remove the foam element from the paper element (Figure 34).

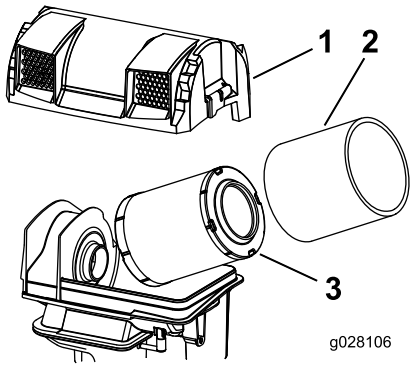

g028106

Figure 34

1. Air-cleaner cover
2. Foam element
3. Paper element

Servicing the Foam Element

1. Wash the foam element in warm water and detergent.
2. Rinse and allow it to air dry.
3. Lightly oil the foam element with new oil and squeeze out excess oil.

Servicing the Paper Element

1. Gently tap the paper element to dislodge dirt.

   Note: Do not wash the paper element or use pressurized air, as this will damage the element.

   Note: Replace a dirty, bent, or damaged element. Handle the new element carefully; do not use if the sealing surfaces are bent or damaged.
2. Clean the air-cleaner base as required, and check the condition.

Installing the Elements

1. Install the foam element onto the paper element.
2. Install the elements onto the air-cleaner base (Figure 34).
3. Install the cover, and secure it with the latches (Figure 33).

Servicing the Engine Oil

Oil Type: Detergent oil (API service SJ or higher)

Crankcase Capacity: 1.9 L (64 oz) when the filter is changed

Viscosity: See the table below.

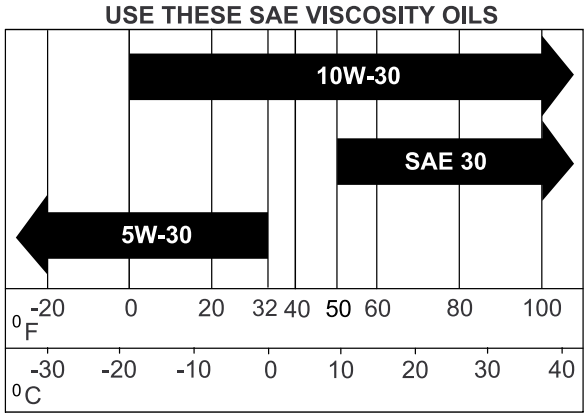

g017552

Figure 35

Checking the Engine-Oil Level

Service Interval: Before each use or daily—Check the engine-oil level.

1. Park the machine on a level surface, disengage the blade-control switch, stop the engine, and remove the key.
2. Make sure the engine is stopped, level, and is cool, so the oil has time to drain into the sump.
3. Check the engine-oil level (Figure 36).

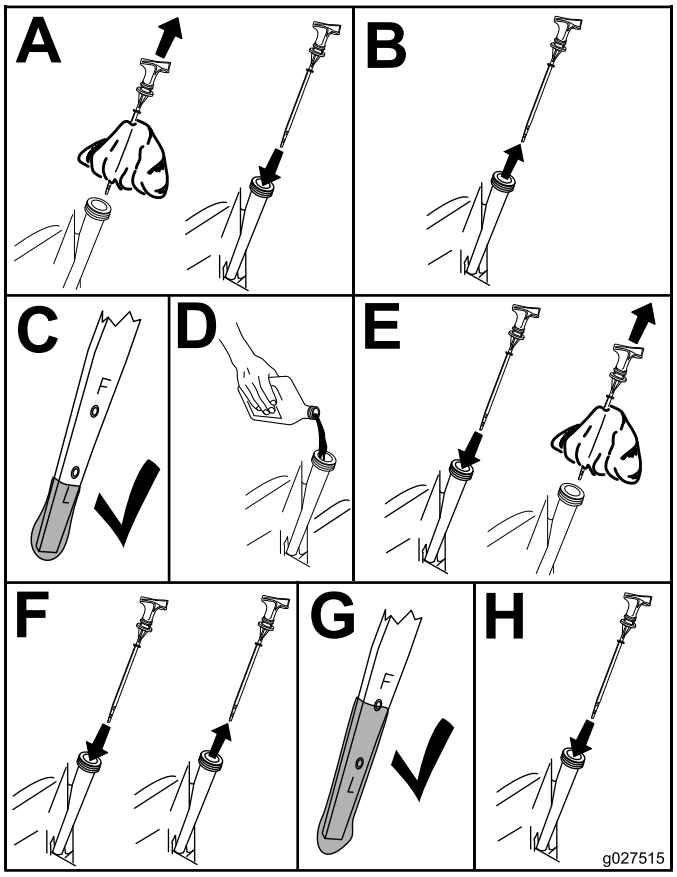

Figure 36

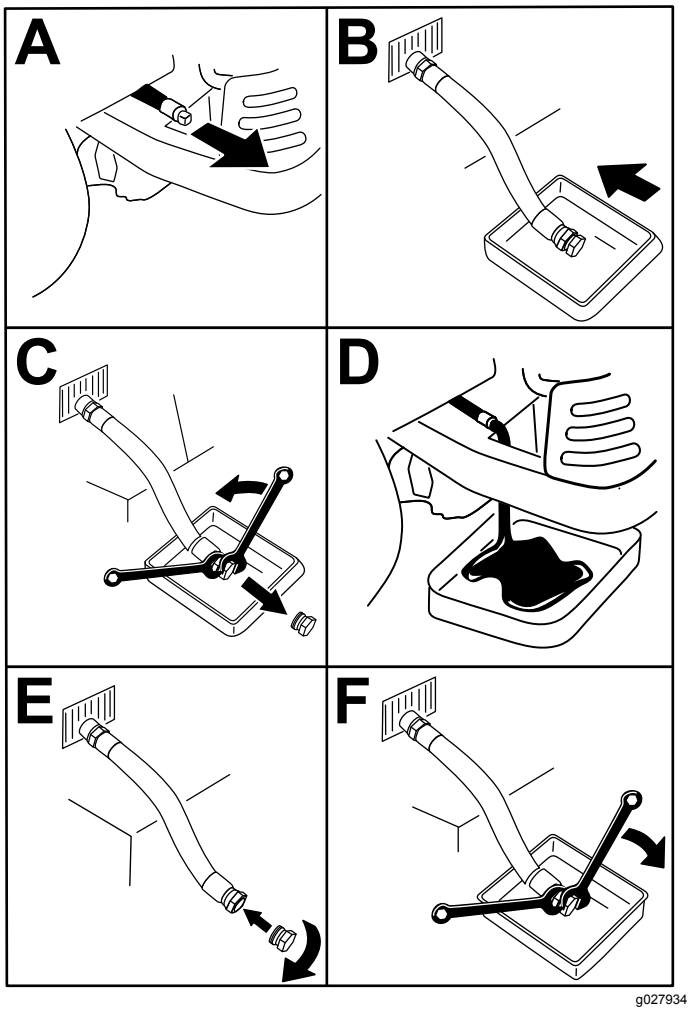

Figure 37

Changing the Engine Oil and the Engine-Oil Filter

Service Interval: Every 100 hours—Change the engine oil and the engine-oil filter.

Note: The drain plug is attached to the drain hose.

Note: Dispose of the used oil at a recycling center.

Fill with oil as specified in the “Viscosity Grades” table (Figure 35).

1. Park the machine, so that the drain side is slightly lower than the opposite side, to ensure that the oil drains completely.
2. Disengage the blade-control switch and move the motion controls outward to the park position.
3. Stop the engine, remove the key, and wait for all moving parts to stop before leaving the operating position.
4. Torque the plug to 14 N-m (10 ft-lb).

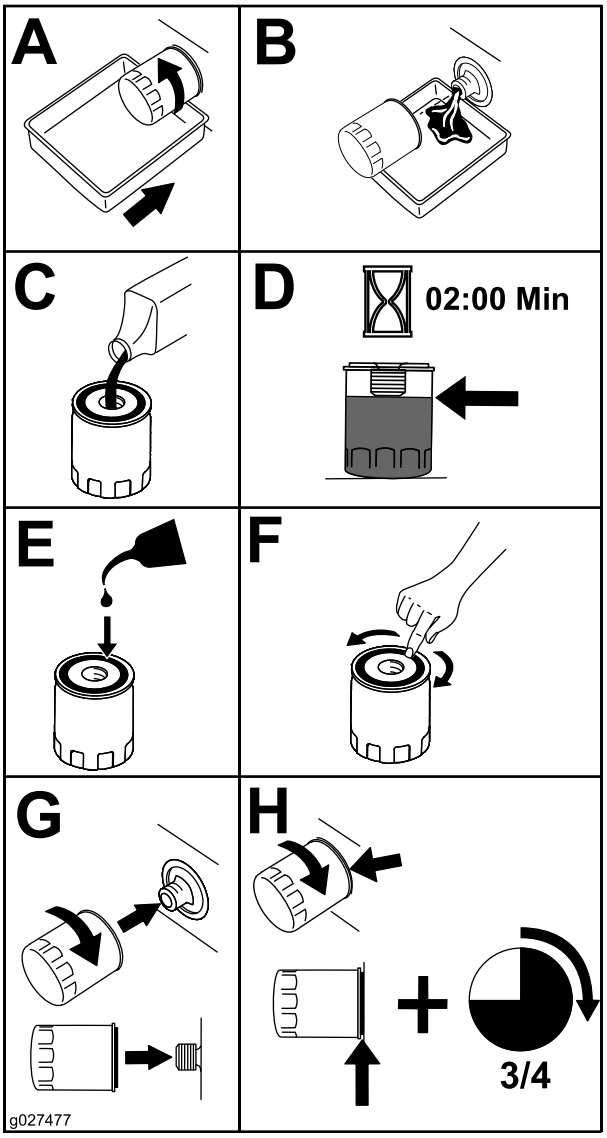

Figure 38

5. Slowly pour approximately 80% of the specified oil into the filler tube (Figure 39).

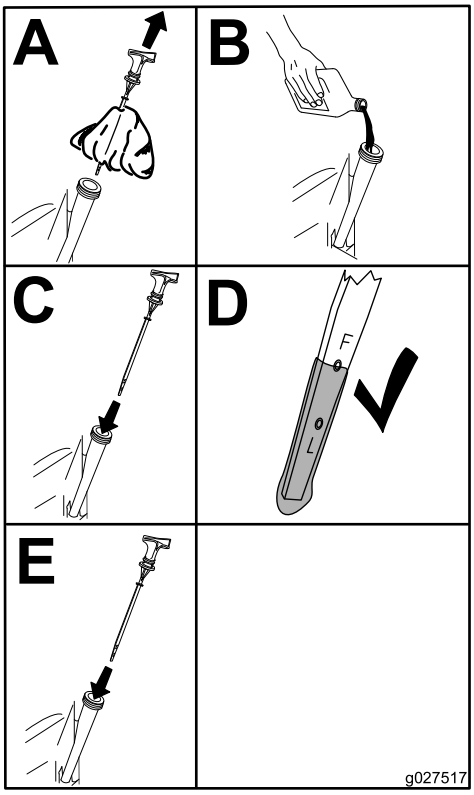

g027517

Figure 39

Servicing the Spark Plug

Service Interval: Every 500 hours—Replace the spark plug(s).

The spark plug is RFI compliant. Equivalent alternate brand plugs can also be used.

Type: Champion XC12YC (or equivalent)

Air Gap: 0.76 mm (0.03 inch)

Removing the Spark Plug

1. Disengage the blade-control switch, move the motion controls outward to the park position, stop the engine, and remove the key.
2. Before removing the spark plug(s), clean the area around the base of the plug to keep dirt and debris out of the engine.
3. Remove the spark plug (Figure 40).

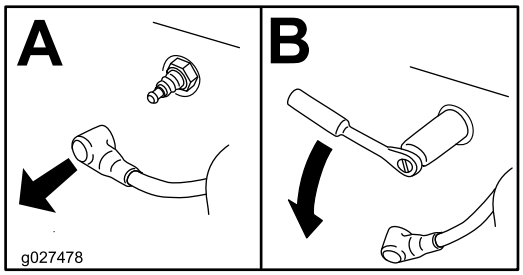

g027478

Figure 40

Checking the Spark Plug

Important: **Do not clean the spark plug(s). Always replace the spark plug(s) when it has: a black coating, worn electrodes, an oily film, or cracks.**

Note: If you see light brown or gray on the insulator, the engine is operating properly. A black coating on the insulator usually means the air cleaner is dirty.

Set the gap to 0.76 mm (0.030 inch).

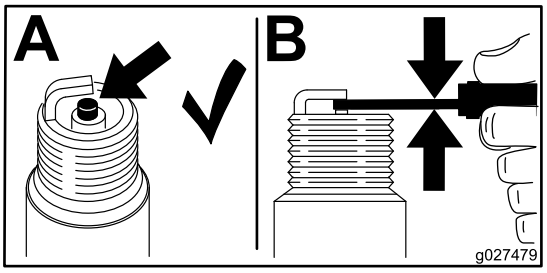

g027479

Figure 41

Installing the Spark Plug

Tighten the spark plug to 27 N-m (20 ft-lb).

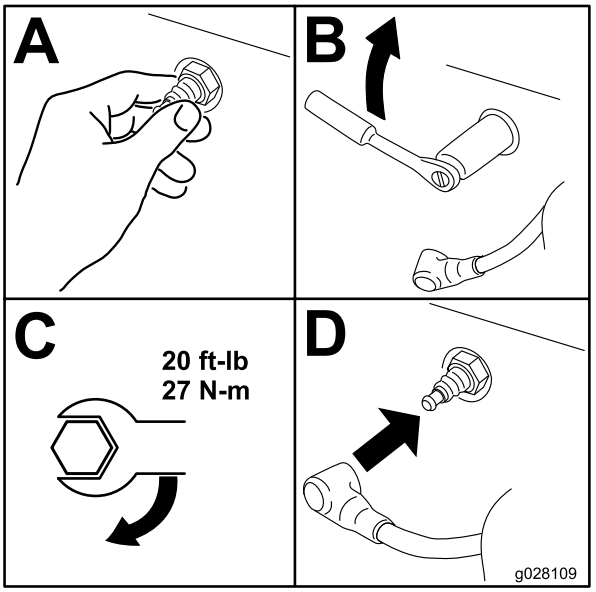

g028109

Figure 42

Cleaning the Blower Housing

Every 100 hours/Yearly (whichever comes first)

To ensure proper cooling, make sure the grass screen, cooling fins, and other external surfaces of the engine are kept clean at all times.

Annually, or every 100 hours of operation (more often under extremely dusty, dirty conditions), remove the blower housing, and any other cooling shrouds. Clean the cooling fins and external surfaces as necessary. Make sure the cooling shrouds are installed.

Important: **Operating the engine with a blocked grass screen, dirty or plugged cooling fins, and/or cooling shrouds removed, will cause engine damage due to overheating.**

Fuel System Maintenance

⚠ DANGER

In certain conditions, gasoline is extremely flammable and highly explosive. A fire or explosion from gasoline can burn you and others and can damage property.

- **Perform any fuel related maintenance when the engine is cold. Do this outdoors in an open area. Wipe up any gasoline that spills.**
- **Never smoke when draining gasoline, and stay away from an open flame or where a spark may ignite the gasoline fumes.**

Replacing the Fuel Filter

Service Interval: Every 100 hours/Yearly (whichever comes first) (more often under dusty, dirty conditions).

1. Disengage the blade control switch (PTO), move the motion control levers to the neutral lock position, and set the parking brake.
2. Stop the engine, remove the key, and wait for all moving parts to stop before leaving the operating position.

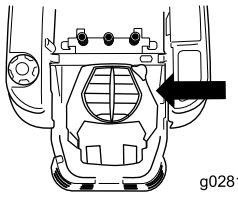

g028110

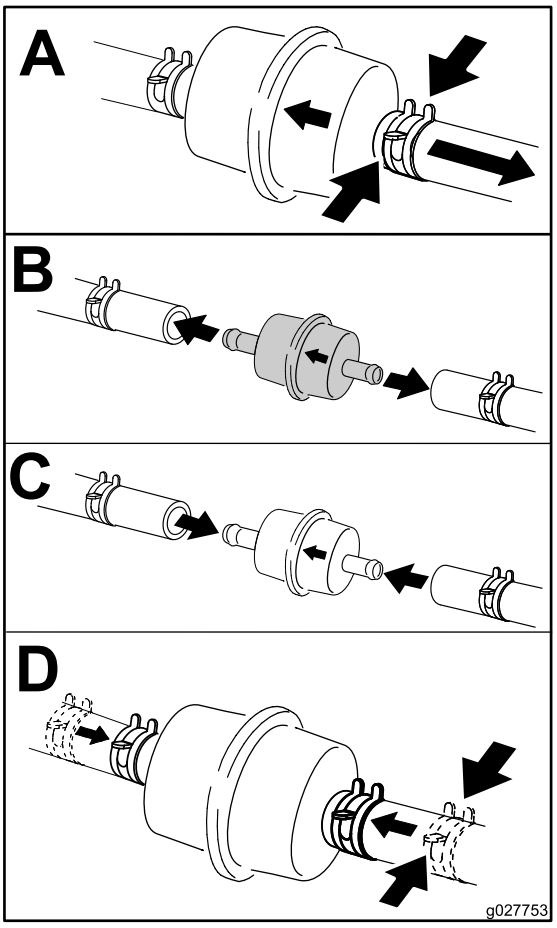

g027753

Figure 43

Electrical System Maintenance

Servicing the Battery

Service Interval: Monthly

WARNING

CALIFORNIA
Proposition 65 Warning

Battery posts, terminals, and related accessories contain lead and lead compounds, chemicals known to the State of California to cause cancer and reproductive harm. Wash hands after handling.

⚠ DANGER

Battery electrolyte contains sulfuric acid which is a deadly poison and causes severe burns.

Do not drink electrolyte, and avoid contact with skin, eyes, or clothing. Wear safety glasses to shield your eyes and rubber gloves to protect your hands.

Removing the Battery

⚠ WARNING

Battery terminals or metal tools could short against metal machine components causing sparks. Sparks can cause the battery gasses to explode, resulting in personal injury.

- **When removing or installing the battery, do not allow the battery terminals to touch any metal parts of the machine.**
- **Do not allow metal tools to short between the battery terminals and metal parts of the machine.**

⚠ WARNING

Incorrect battery cable routing could damage the machine and cables causing sparks. Sparks can cause the battery gasses to explode, resulting in personal injury.

- **Always disconnect the negative (black) battery cable before disconnecting the positive (red) cable.**
- **Always reconnect the positive (red) battery cable before reconnecting the negative (black) cable.**

1. Disengage the blade control switch (PTO), move the motion control levers to the neutral lock position, and set the parking brake.
2. Stop the engine, remove the key, and wait for all moving parts to stop before leaving the operating position.
3. Remove the wing nut securing the battery clamp (Figure 44).

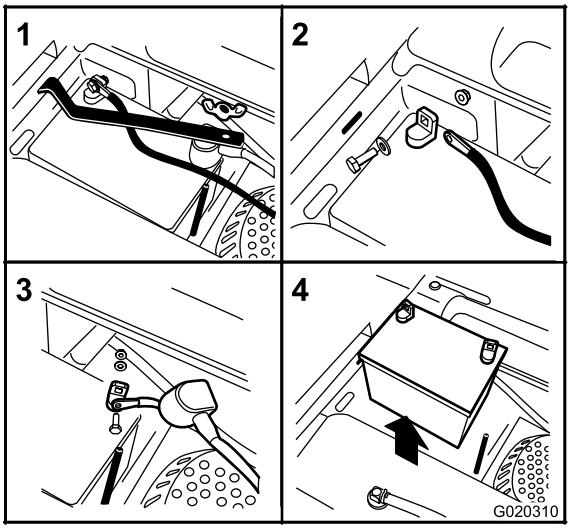

g020310

Figure 44

1. Remove the wing nut and clamp
2. Remove the negative battery cable before the positive
3. Remove the positive battery cable
4. Remove the battery

4. Remove the clamp (Figure 44).
5. First disconnect the negative battery cable (black) from the negative (-)(black) battery terminal (Figure 44).
6. Slide the red terminal boot off the positive (red) battery terminal and remove the positive (+)(red) battery cable (Figure 44).
7. Remove the battery.

Installing the Battery

1. Position the battery in the tray with the terminal posts opposite from the fuel tank (Figure 44).
2. Install the positive (red) battery cable to the positive (+) battery terminal.
3. Install the negative battery (black) cable to the negative (-) battery terminal.
4. Secure the cables with 2 bolts, 2 washers, and 2 locknuts (Figure 44).
5. Slide the red terminal boot onto the positive (red) battery post.
6. Install the clamp and secure it with the wing nut (Figure 44).

Charging the Battery

⚠ WARNING

Charging the battery produces gasses that can explode.

Never smoke near the battery, and keep sparks and flames away from battery.

Important: **Always keep the battery fully charged. This is especially important to prevent battery damage when the temperature is below 32°F (0°C).**

1. Charge the battery for 10 to 15 minutes at 25 to 30 amps or 30 minutes at 10 amps.
2. When the battery is fully charged, unplug the charger from the electrical outlet, then disconnect the charger leads from the battery posts (Figure 45).
3. Install the battery in the machine and connect the battery cables, refer to Installing the Battery.

   Note: Do not run the machine with the battery disconnected; electrical damage may occur.

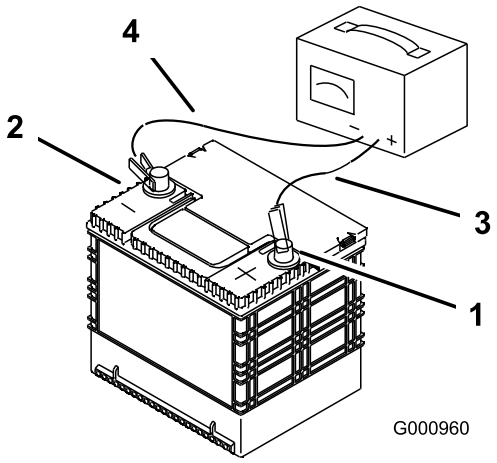

g000960

Figure 45

1. Positive battery post
2. Negative battery post
3. Red (+) charger lead
4. Black (-) charger lead

Servicing the Fuses

The electrical system is protected by fuses. It requires no maintenance; however if a fuse blows, check the component/circuit for a malfunction or short.

Note: The fuses are located on right hand console next to the seat (Figure 46).

Fuses:

- Main, 30 amp, blade-type
- Engine, 20 amp, blade-type

1. To replace the main fuse, grasp the fuse and pull it straight and away from the fuse block.

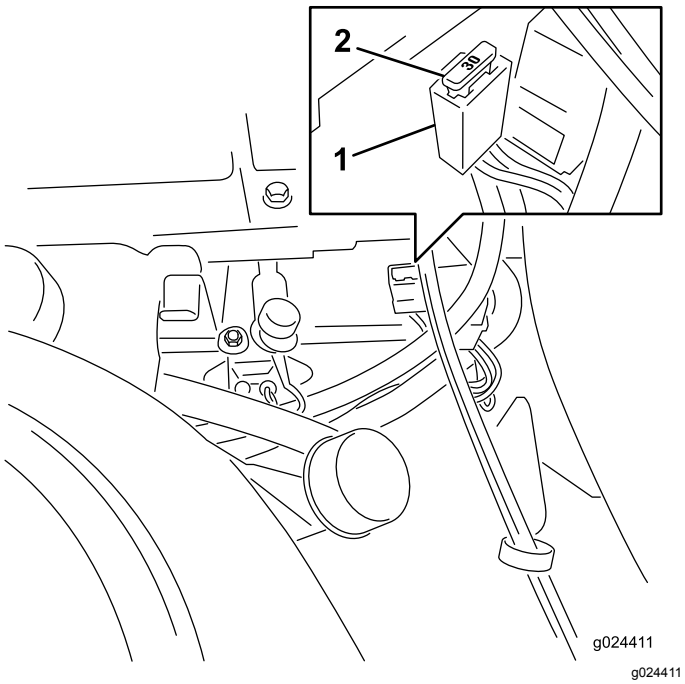

Figure 46

1. Fuse block
2. 30 amp main fuse

Important: **Ensure that the new fuses are the same type and amperage as the fuses removed.**

2. To replace the engine fuse, remove the console from the plastic fender.

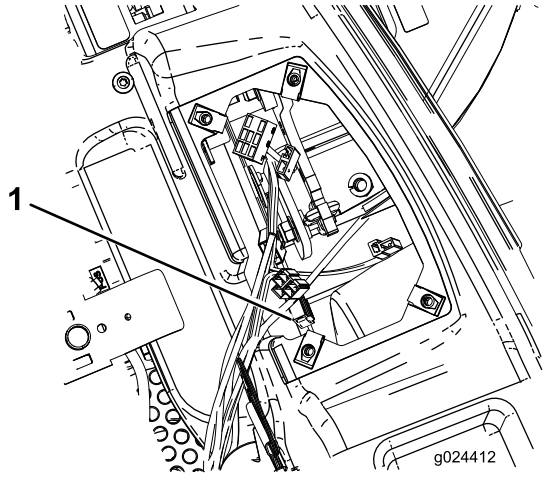

Figure 47

1. Engine fuse

3. Grasp the engine fuse and pull it straight and away from the fuse block (Figure 47).
4. Align a new fuse with the slot in the fuse block (Figure 46).
5. Push the fuse into the fuse block until the fuse is seated (Figure 46).

Drive System Maintenance

Checking the Tire Pressure

Service Interval: Every 25 hours—Check tire pressure.

Maintain the air pressure in the front and rear tires as specified. Uneven tire pressure can cause uneven cut. Check the pressure at the valve stem (Figure 48). Check the tires when they are cold to get the most accurate pressure reading.

Refer to the maximum pressure suggested by the tire manufacturer on the sidewall of the caster wheel tires.

Inflate the rear drive wheel tires to 89.6 kPa (13 psi).

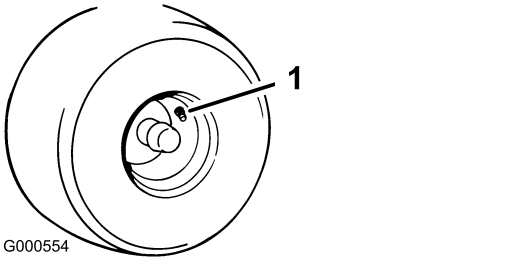

Figure 48

1. Valve stem

Hydraulic System Maintenance

Hydraulic System Oil Specification

Oil Type: 20w-50 engine oil.

System Capacity: approximately 4.495 liter (152 oz) with a filter change.

Important: **Use oil specified or equivalent. Other fluids could cause system damage.**

Checking the Hydraulic Oil Level

Service Interval: Every 25 hours

Check expansion reservoir and if necessary add 20W-50 engine oil to the FULL COLD line

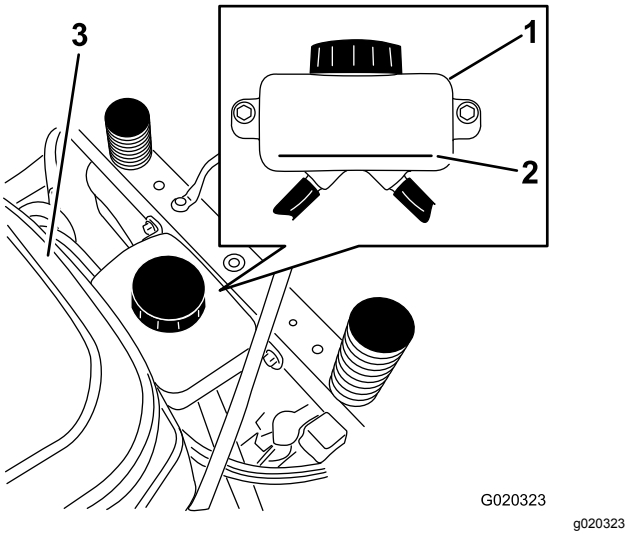

Figure 49

1. Expansion reservoir
2. Full Cold line
3. Engine

Changing the Hydraulic System Filter and Oil

The filter and oil are changed at the same time. **Do not** reuse oil. Once the new filter is installed and oil is added any air in the system must be purged.

The bleeding process is repeated until the oil remains at the Full Cold line in the reservoir after purging. **Failure to properly perform this procedure can result in irreparable damage to the transaxle drive system.**

Removing the Hydraulic System Filters

1. Stop engine, wait for all moving parts to stop, and allow engine to cool.
2. Remove the key and engage the parking brake.
3. Locate the filter and guards on each transaxle drive system (Figure 50).

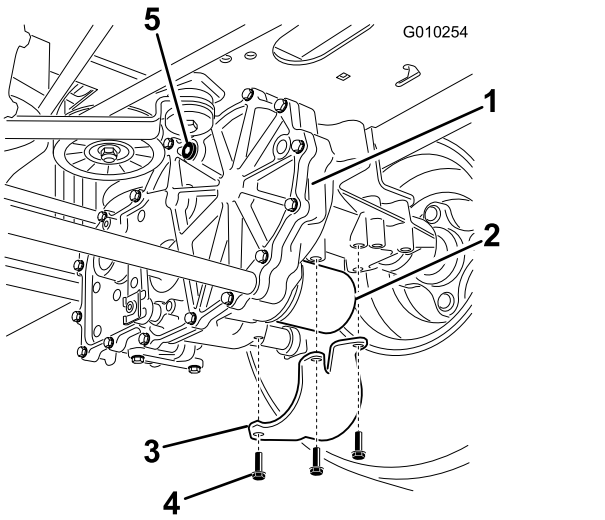

Figure 50

Right side shown

1. Transaxle drive
2. Oil filter
3. Filter guard
4. Screws
5. Vent plug

4. Remove three screws securing the filter guard and remove the guard (Figure 50).

   Note: It is important that no dirt or contamination enter hydraulic system.
5. Carefully clean area around filters.
6. Place a container below the filter to catch the oil that drains when the filter and vent plugs are removed (Figure 51).

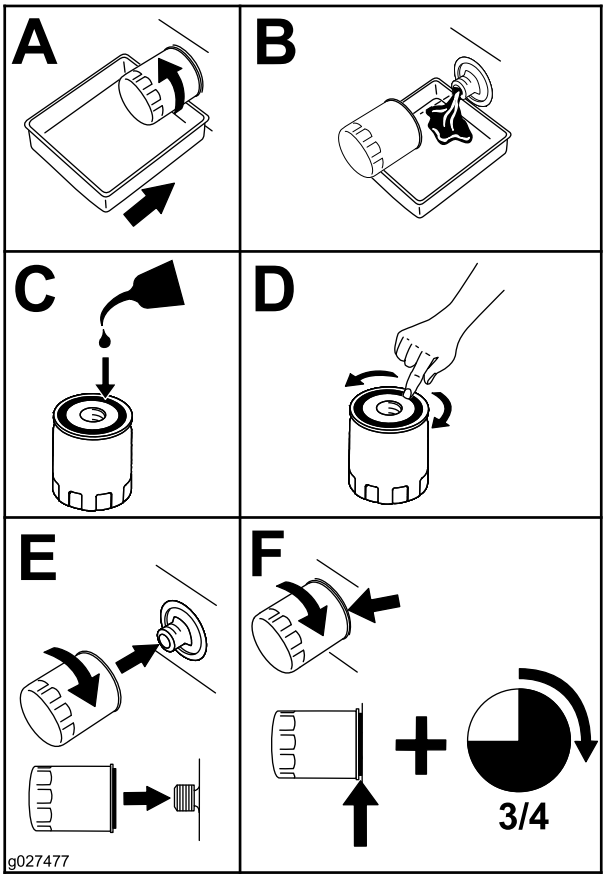

Figure 51

7. Locate and remove the vent plug on each transmission
8. Rotate the filter counterclockwise to remove the filter; allow oil to drain from drive system.

Repeat this procedure for both filters.

Installing the Hydraulic System Filters

Service Interval: After the first 50 hours

Every 400 hours

1. Apply a thin coat of oil on the surface of the rubber seal of each filter (Figure 51).
2. Turn the filter clockwise until rubber seal contacts the filter adapter then tighten the filter an additional 3/4 to 1 full turn (Figure 51).
3. Repeat step 2 for the other filter.
4. Align the filter guards over each filter; refer to step 4 of Removing the Hydraulic System Filters (page 41).
5. Secure the filter guards with the 3 screws removed in step 4 of Removing the Hydraulic System Filters (page 41). Use the 3 screws to secure the filter guards.
6. Add oil to the hydraulic system as follows:
   A. Ensure that the vent plugs and reservoir cap are removed before adding the oil (Figure 49 and Figure 50).
   B. Slowly pour the specified oil through expansion reservoir until oil comes out of **one** of the vent plug holes and stop filling (Figure 50).
   C. Install that vent plug (Figure 50).

      Note: Torque the plug to 20.3 N-m (180 in-lb).
   D. Add oil through the expansion reservoir until oil comes out of the remaining vent plug hole on the second transmission and stop filling (Figure 50).
   E. Install that vent plug (Figure 50).

      Note: Torque the plug to 20.3 N-m (180 in-lb).
7. Add oil through the expansion reservoir until it reaches the Full Cold line on the expansion reservoir and install the cap for the reservoir (Figure 49).
8. Bleed the hydraulic system; refer to Bleeding the Hydraulic System (page 43).

Important: **Failure to perform the *Bleeding the Hydraulic System* procedure after changing hydraulic filters and oil may result in irreparable damage to the transaxle drive system.**

Bleeding the Hydraulic System

1. Raise the rear of machine up and support with jack stands (or equivalent support) just high enough to allow drive wheels to turn freely.

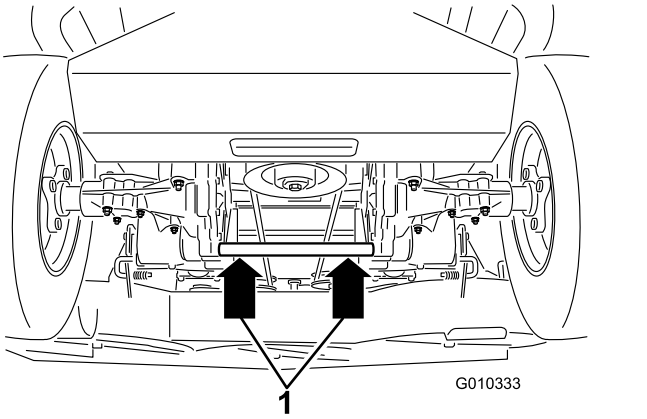

Figure 52

1. Jacking points

2. Go to the operator's position.
3. Start engine and move throttle control ahead to 1/2 throttle position.
4. Disengage parking brake.
5. Cycle the hydraulic system by performing the following:
   A. Move the bypass levers rearward and then down to lock them in place (valve open position); refer to Pushing the Machine by Hand (page 25).
   B. With the bypass valves open and the engine running, slowly move the motion control levers in both forward and reverse (5 or 6 times).
   C. Move the bypass levers up to unlock them and forward (valve closed position); refer to To Operate the Machine (page 25).
   D. With the bypass valve closed and the engine running, slowly move the directional control in both forward and reverse directions (5 to 6 times).
6. Stop the engine and check the oil level in the expansion reservoir. Add the specified oil as until it reaches the FULL COLD line on the expansion reservoir (Figure 49).
7. Repeat step 5 until all the air is completely purged from the system.

   Note: When the transaxle operates at normal noise levels and moves smoothly forward and reverse at normal speeds, then the transaxle is considered purged.

8. Check the oil level in the expansion reservoir one last time. Add the specified oil as until it reaches the FULL COLD line on the expansion reservoir if necessary (Figure 49).

Mower Deck Maintenance

Servicing the Cutting Blades

Maintain sharp blades throughout the cutting season because sharp blades cut cleanly without tearing or shredding the grass blades. Tearing and shredding turns grass brown at the edges, which slows growth and increases the chance of disease.

Check the cutter blades daily for sharpness, and for any wear or damage. File down any nicks and sharpen the blades as necessary. If a blade is damaged or worn, replace it immediately with a genuine Toro replacement blade. For convenient sharpening and replacement, you may want to keep extra blades on hand.

⚠ WARNING

A worn or damaged blade can break, and a piece of the blade could be thrown into the operator's or bystander's area, resulting in serious personal injury or death.

- **Inspect the blade periodically for wear or damage.**
- **Replace a worn or damaged blade.**

Before Inspecting or Servicing the Blades

1. Park the machine on a level surface and the parking brake.
2. Disengage the blade control switch (PTO).
3. Turn the ignition key to Off and remove the key.

Inspecting the Blades

Service Interval: Before each use or daily

1. Inspect the cutting edges (Figure 53).

   Note: If the edges are not sharp or have nicks, remove and sharpen the blades; refer to Sharpening the Blades (page 46).

2. Inspect the blades, especially the curved area (Figure 53).

   Note: If you notice any damage, wear, or a slot forming in this area (Figure 53), immediately install a new blade.

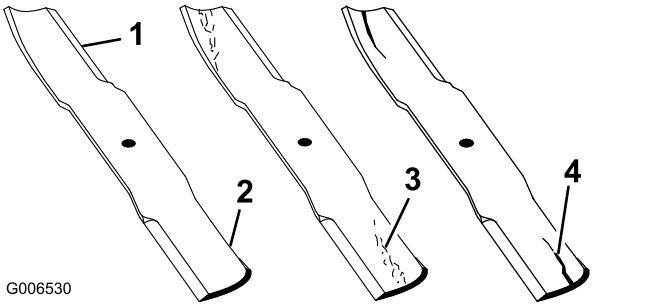

Figure 53

1. Cutting Edge
2. Curved Area
3. Wear/slot Forming
4. Crack

Checking for Bent Blades

Note: The machine must be on a level surface for the following procedure.

1. Raise the mower deck to the highest height-of-cut position; also considered the 'transport' position.
2. While wearing thickly padded gloves or other adequate hand protection, slowly rotate blade to be measured into a position that allows effective measurement of the distance between the cutting edge and a level surface.

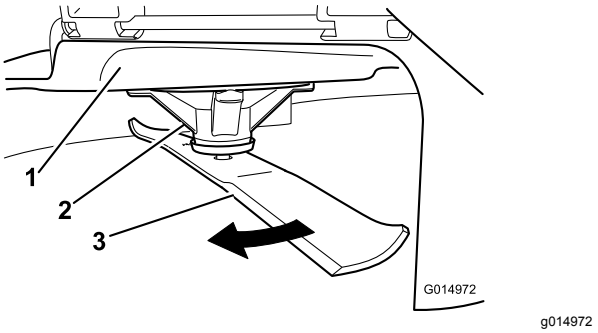

Figure 54

1. Deck
2. Spindle housing
3. Blade

3. Measure from the tip of the blade to the level surface.

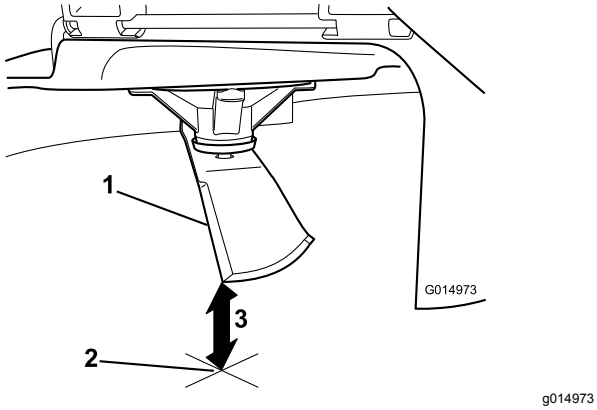

Figure 55

1. Blade, in position for measuring
2. Level surface
3. Measured distance between blade and surface (A)

4. Rotate the same blade 180 degrees so that the opposing cutting edge is now in the same position.

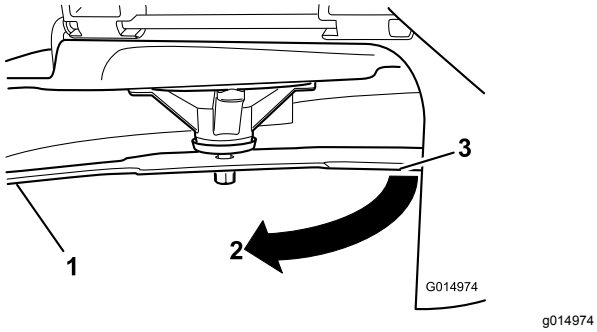

Figure 56

1. Blade, side previously measured
2. Measurement position used previously
3. Opposing side of blade being moved into measurement position

5. Measure from the tip of the blade to the flat surface here.

   Note: The measured variance should be no more than 3 mm (1/8 inch).

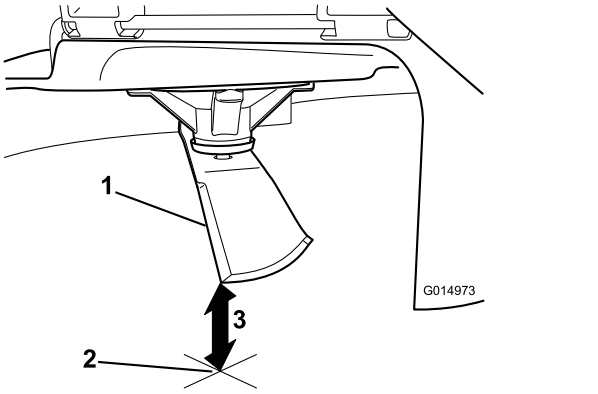

Figure 57

1. Opposing blade edge, in position for measuring
2. Level surface
3. Second measured distance between blade and surface (B)

⚠ WARNING

A blade that is bent or damaged could break apart and could seriously injure or kill you or bystanders.

- **Always replace a bent or damaged blade with a new blade.**
- **Never file or create sharp notches in the edges or surfaces of the blade.**

A. If the difference between A and B is greater than 3 mm (1/8 inch) replace the blade with a new blade; refer to Removing the Blades (page 45) and Installing the Blades (page 46).

   Note: If a bent blade is replaced with a new one and the dimension obtained continues to exceed 3 mm (1/8 inch), the blade spindle could be bent. Contact an Authorized Toro Dealer for service.

B. If the variance is within constraints, move to step 6.

6. Perform steps 2, 3, 4, and 5 on the other blade.

Removing the Blades

Replace a blade whenever it strikes an object, is out of balance, or is bent. To ensure optimum performance and continued safety conformance of the machine, use only genuine Toro replacement blades. Replacement blades made by other manufacturers may result in non-conformance with safety standards.

Hold the blade end using a rag or thickly-padded glove. Remove the blade bolt, curved washer, and blade from the spindle shaft (Figure 58).

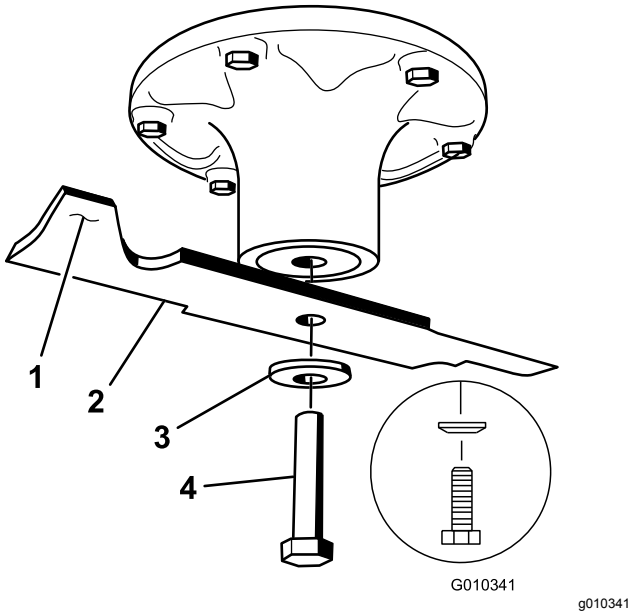

Figure 58

1. Sail Area of Blade
2. Blade
3. Curved washer
4. Blade Bolt

Sharpening the Blades

⚠ WARNING

When sharpening blade, pieces of blade could be thrown and cause serious injury.

Wear proper eye protection when sharpening blade.

1. Use a file to sharpen the cutting edge at both ends of the blade (Figure 59).

   Note: Maintain the original angle.

   Note: The blade retains its balance if the same amount of material is removed from both cutting edges.

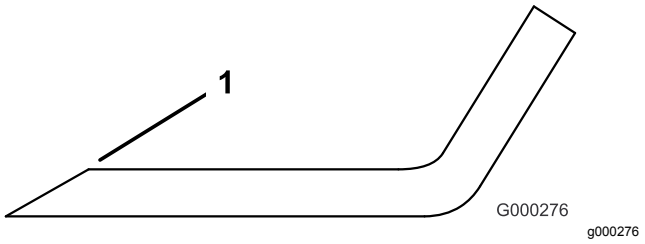

Figure 59

1. Sharpen at original angle

2. Check the balance of the blade by putting it on a blade balancer (Figure 60).
   - If the blade stays in a horizontal position, the blade is balanced and can be used.
   - If the blade is not balanced, perform the following steps:
     A. File some metal off the end of the sail area only (Figure 58).
     B. Repeat this procedure until the blade is balanced.

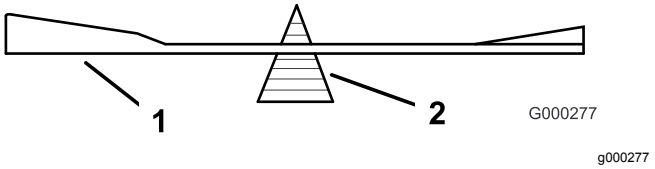

Figure 60

1. Blade
2. Balancer

Installing the Blades

1. Install the blade onto the spindle shaft (Figure 58).

   Important: **The curved part of the blade must point upward toward the inside of the mower to ensure proper cutting.**

2. Install the spring disk and blade bolt (Figure 58).

   Note: The spring disk cone must be installed toward the bolt head

3. Thread the bolt into the shaft clockwise and torque the bolt to 135-150 N-m (100-110 ft-lb).

Mower Deck Leveling

Check to ensure the mower deck is level any time you install the mower or when you see an uneven cut on your lawn.

The mower deck must be checked for bent blades prior to leveling; any bent blades must be removed and replaced; refer to Checking for Bent Blades (page 44) before continuing.

The mower deck must be leveled side-to-side first then the front to rear slope can be adjusted.

Requirements:

- The machine must be on a level surface.
- All four tires must be properly inflated; refer to Checking the Tire Pressure (page 40).

Checking Side-to-Side Level

The mower blades must be level from side to side. Check the side-to-side level any time you install the mower or when you see an uneven cut on your lawn.

1. Park the machine on a level surface and disengage the blade control switch.

2. Move the motion control levers outward to the neutral lock position, stop the engine, remove the key, set the parking brake and wait for all moving parts to stop before leaving the operating position.
3. Carefully rotate the blades side to side.
4. Measure between the outside cutting edges and the flat surface (Figure 61).

   Note: If both measurements are not within 5 mm (3/16 inch), an adjustment is required; continue to the Leveling procedure.

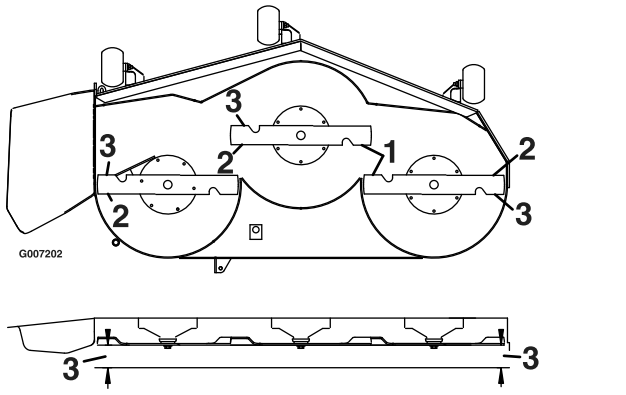

Figure 61

1. Blades side to side
2. Outside cutting edges
3. Measure from the tip of the blade to the flat surface here

Checking the Front-to-Rear Blade Slope

Check the front-to-rear blade level any time you install the mower. If the front of the mower is more than 7.9 mm (5/16 inch) lower than the rear of the mower, adjust the blade level using the following instructions:

1. Park the machine on a level surface and disengage the blade control switch.
2. Move the motion control levers outward to the neutral position, engage the parking brake, stop the engine, remove the key, and wait for all moving parts to stop before leaving the operating position.
3. Carefully rotate the blades so they are facing front to rear (Figure 62).
4. Measure from the tip of the front blade to the flat surface and the tip of the rear blade to the flat surface (Figure 62).

   Note: If the front blade tip is not 1.6-7.9 mm (1/16-5/16 inch) lower than the rear blade tip, continue to the Leveling the Mower Deck procedure.

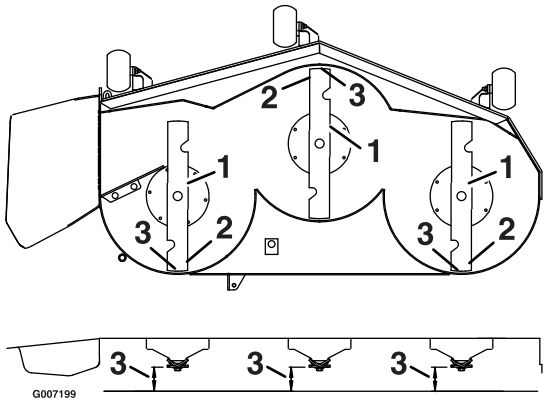

Figure 62

1. Blades front to rear
2. Outside cutting edges
3. Measure from the tip of the blade to the flat surface here

Leveling the Mower Deck

1. Set anti-scalp rollers to top holes or remove completely for this procedure; refer to Adjusting the Anti-Scalp Rollers (page 24).
2. Set the height-of-cut lever to the 76 mm (3 inch) position; refer to Adjusting the Height-of-Cut (page 23).
3. Place two 6.66 cm (2-5/8 inch) blocks under each side of the front edge of the deck, but not under the anti-scalp roller brackets (Figure 63).
4. Place two 7.30 cm (2-7/8 inch) thick blocks under the rear edge of the cutting deck skirt; one on each side of the cutting deck (Figure 63).

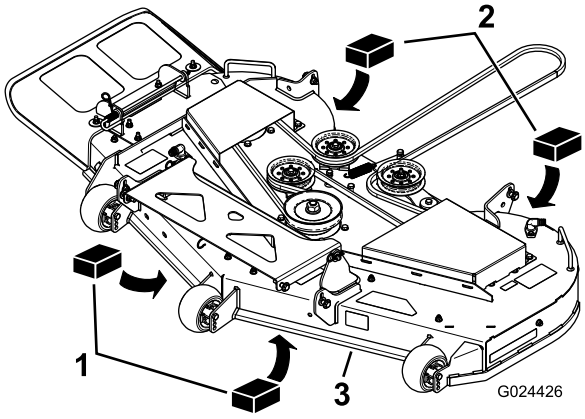

Figure 63

1. Wood block, 6.66 cm (2-5/8 inch) thick
2. Wood block, 7.30 cm (2-7/8 inch) thick
3. Front edge

5. Loosen the adjustment bolts on all four corners so that the deck is sitting securely on all four blocks (Figure 64).

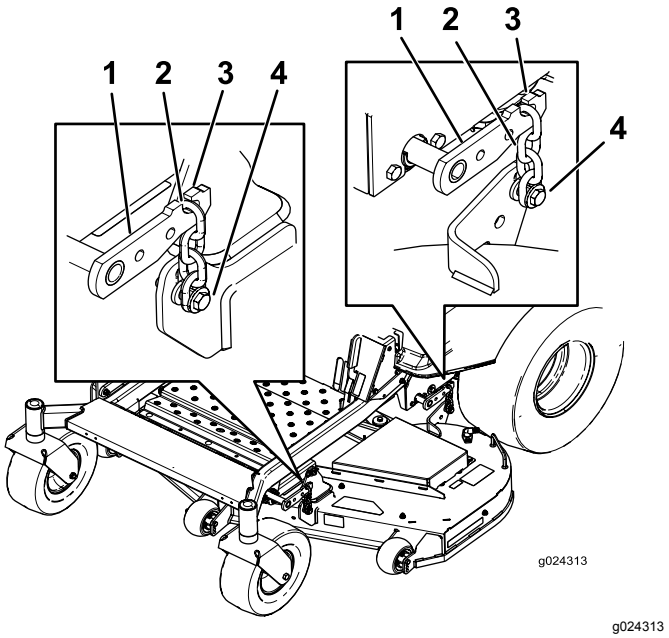

Figure 64

1. Deck lift arm
2. Chain
3. Hook
4. Adjustment bolt

6. Ensure there is tension on all four chains(Figure 64).
7. Tighten the four adjustment bolts(Figure 64).
8. Check that blocks fit just snugly under the deck skirt. Make sure all bolts are tight
9. Verify that the deck is level by checking the side-to-side level and front-to-rear blade slope; repeat the deck leveling procedure if necessary.

Inspecting the Belts

Service Interval: Every 50 hours

Check the belts for squealing when the belt is rotating, blades slipping when cutting grass, frayed belt edges, burn marks and cracks are signs of a worn mower belt. Replace the mower belt if any of these conditions is evident.

Note: Lift the floor pan to gain access to the belt and idler pulley.

Replacing the Mower Belt

⚠ WARNING

The spring is under tension when installed and can cause personal injury.

Be careful when removing the belt.

Removing the Belt

Squealing when the belt is rotating, blades slipping when cutting grass, frayed belt edges, burn marks and cracks are signs of a worn mower belt. Replace the mower belt if any of these conditions is evident.

1. Disengage the blade control switch (PTO), move the motion control levers to the neutral locked position, and set the parking brake.
2. Stop the engine, remove the key, and wait for all moving parts to stop before leaving the operating position.
3. Lower the mower to the 76 mm (3 inch) height-of-cut position.
4. Lift the floor pan to gain access to the belt and idler pulley.
5. Remove the belt covers (Figure 65).

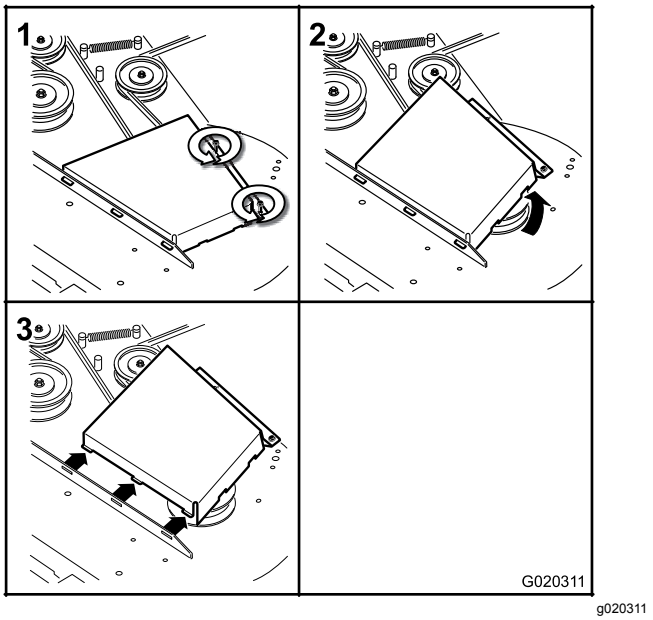

Figure 65

1. Loosen the screws
2. Pivot the belt cover up
3. Remove belt cover

6. Using a spring removal tool (Toro part no. 92-5771), remove the idler spring from the deck post to remove tension on the idler pulley (Figure 66).

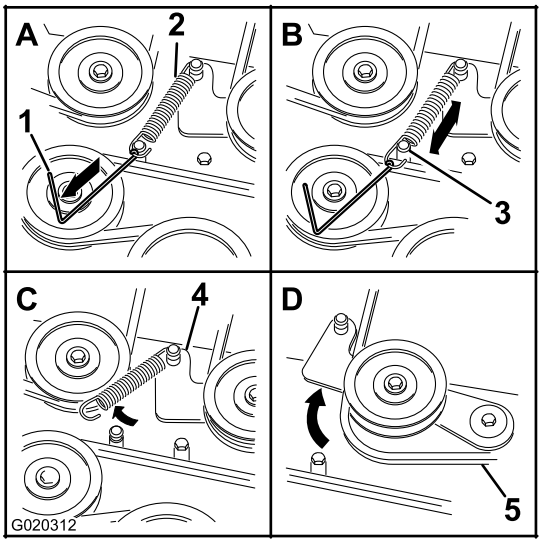

g020312

Figure 66

1. Spring removal tool (Toro part no. 92-5771)
2. Idler spring
3. Deck post
4. Idler arm
5. Mower belt

7. Lower the mower to the lowest height-of-cut.
8. Place the height-of-cut pin in the lock position for lowest height-of-cut.
9. Remove the belt from the mower deck pulleys and remove the existing belt.

Installing the Belt

1. Install the new belt around the mower pulleys and the clutch pulley under the engine (Figure 66).
2. Using a spring removal tool (Toro part no. 92-5771), install the idler spring over the deck post and place tension on the idler pulley and mower belt (Figure 66).
3. Ensure that the belt is properly seated in all pulleys.
4. Install the belt covers (Figure 67).

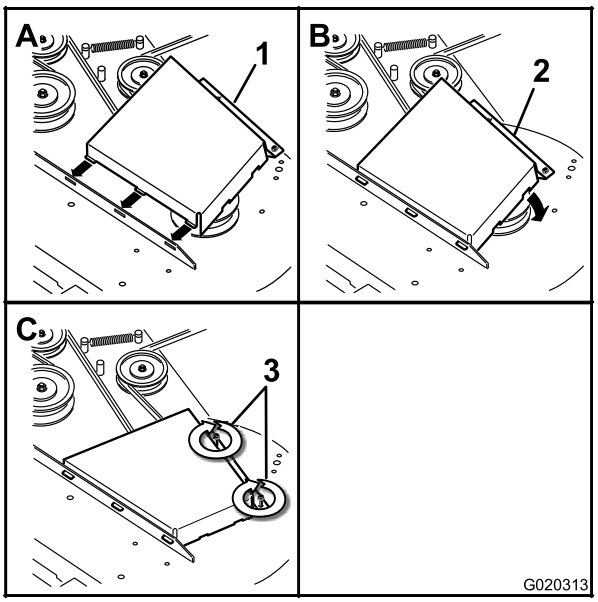

g020313

Figure 67

1. Position the belt cover and ensure that the tabs seat.
2. Pivot the belt cover down
3. Tighten the screws

Removing the Mower

Park the machine on a level surface and disengage the blade control switch. Move the motion control levers outward to the neutral position, engage parking brake, stop the engine, remove the key, and wait for all moving parts to stop before leaving the operating position.

Lower the mower to the lowest height-of-cut. Select one of the following procedures depending on the mower deck size installed to complete the removal.

Preparing to Remove the Mower Deck

1. Lower the mower to the 76 mm (3 inch) height-of-cut position.
2. Remove the mower belt from the engine pulley; refer to Removing the Belt (page 48).

Removing the Mower Deck

1. Remove the hair pin cotter and washer securing the long, link pin to the frame and deck; remove the link bar (Figure 68).

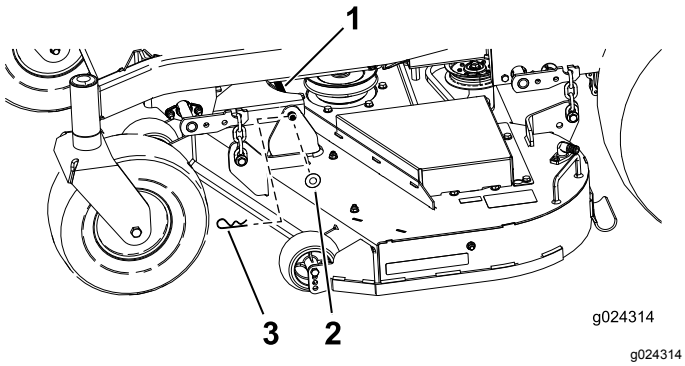

Figure 68

1. Link pin
2. Washer
3. Hair pin cotter

2. Lift up on the mower deck to relieve tension from the mower deck.
3. Remove the chains from the hooks on the deck lift arms (Figure 69).

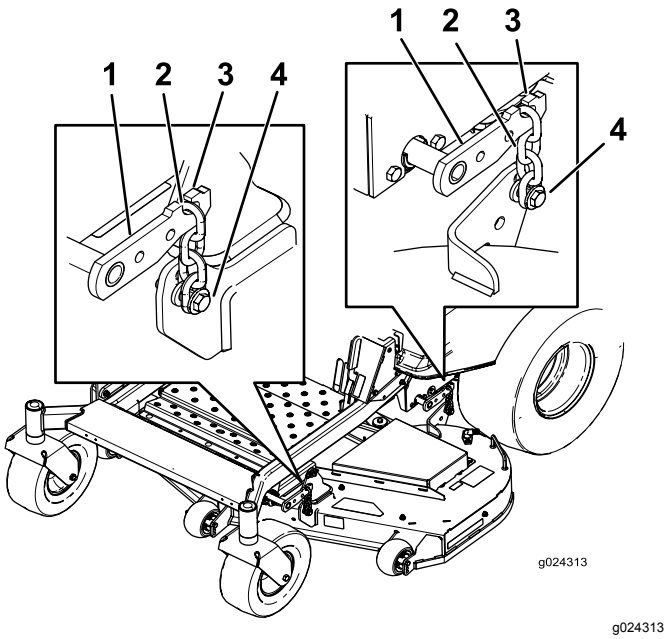

Figure 69

1. Deck lift arm
2. Chain
3. Hook
4. Adjustment bolt

4. Raise the height-of-cut to the transport position.
5. Remove the belt from the clutch pulley on the engine.
6. Slide the mower out from underneath the machine.

Note: Retain all parts for future installation.

Installing the Mower Deck

1. Park the machine on a level surface and disengage the blade control switch.
2. Move the motion control levers outward to the neutral lock position, stop the engine, remove the key, set the parking brake and wait for all moving parts to stop before leaving the operating position.
3. Slide the mower under the machine.
4. Lower the height-of-cut lever to the lowest position.
5. Place the height-of-cut pin in the lock position for lowest height-of-cut.
6. Lift the rear of the mower deck and attach the chains to the rear lift arms (Figure 69).
7. Attach the front chains to the front lift arms (Figure 69).
8. Install the long, link bar through the frame hanger and deck.
9. Secure the link pin with the hair pin cotters and washers removed previously (Figure 68).
10. Install the mower belt onto the engine pulley; refer to Installing the Belt (page 49).

Replacing the Grass Deflector

Service Interval: Before each use or daily—Inspect the grass deflector for damage

⚠ WARNING

An uncovered discharge opening could allow the lawn mower to throw objects in the operator's or bystander's direction and result in serious injury. Also, contact with the blade could occur.

Never operate the lawn mower unless you install a mulch plate, discharge deflector, or grass collection system.

Inspect the grass deflector for damage before each use. Replace any damaged parts before use.

1. Disengage the spring from the notch in the deflector bracket and slide the rod out of the welded deck brackets, spring, and discharge deflector (Figure 70).

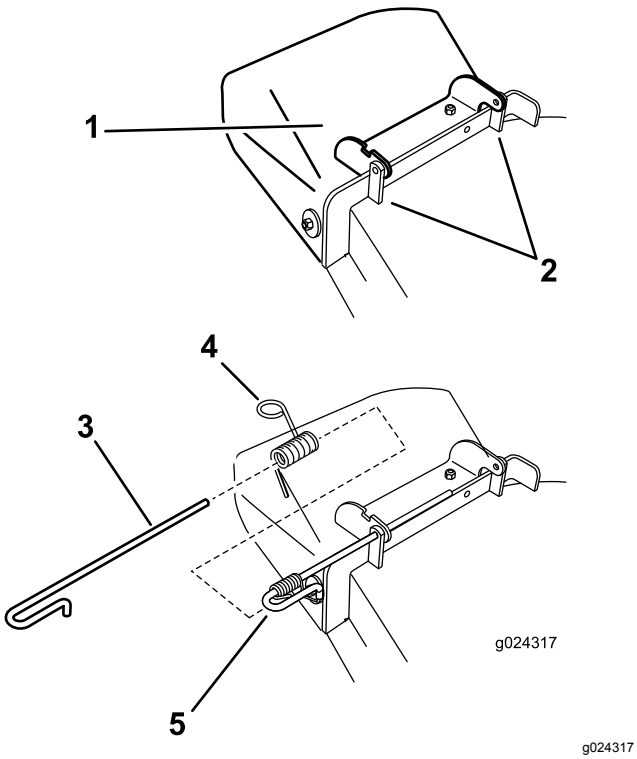

Figure 70

1. Deflector assembly
2. Deck brackets
3. Rod
4. Spring
5. Spring installed over the rod

2. Remove the damaged or worn discharge deflector.
3. Position the new discharge deflector assembly with the bracket ends between the welded brackets on the deck as shown in Figure 70.
4. Install the spring onto the straight end of the rod. Position the spring on the rod as shown in Figure 70 so the shorter spring end is coming from under the rod before the bend and going over the rod as it returns from the bend.
5. Lift the loop end of the spring and place it into the notch on the deflector assembly bracket (Figure 71).

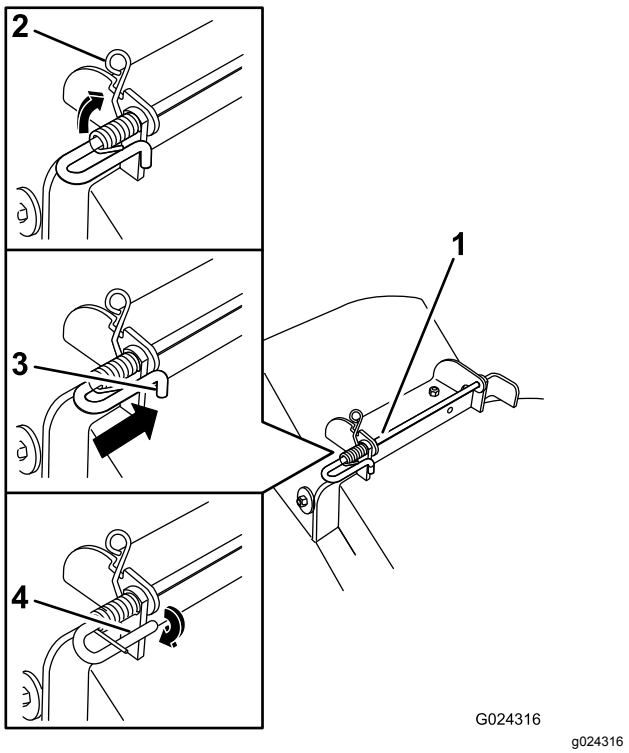

Figure 71

1. Rod and spring assembly partially installed
2. Loop end of the spring installed into the notch in the deflector bracket
3. Rod, short end, moved behind mower bracket
4. Short end, retained by mower bracket.

6. Secure the rod and spring assembly by twisting it so the short end of the rod can be placed behind the front bracket welded to the deck (Figure 71).

Important: **The grass deflector must be spring loaded in the down position. Lift the deflector up to test that it snaps to the full down position.**

Cleaning

Washing the Underside of the Mower

Service Interval: After each use—Clean the mower housing.

Wash the underside of the mower after each use to prevent grass buildup for improved mulch action and clipping dispersal.

1. Park the machine on a level surface and disengage the blade control switch.
2. Move the motion control levers outward to the neutral lock position, stop the engine, remove the key, and wait for all moving parts to stop before leaving the operating position.
3. Attach the hose coupling to the end of the mower washout fitting, and turn the water on high (Figure 72).

   Note: Spread petroleum jelly on the washout fitting O-ring to make the coupling slide on easier and protect the O-ring.

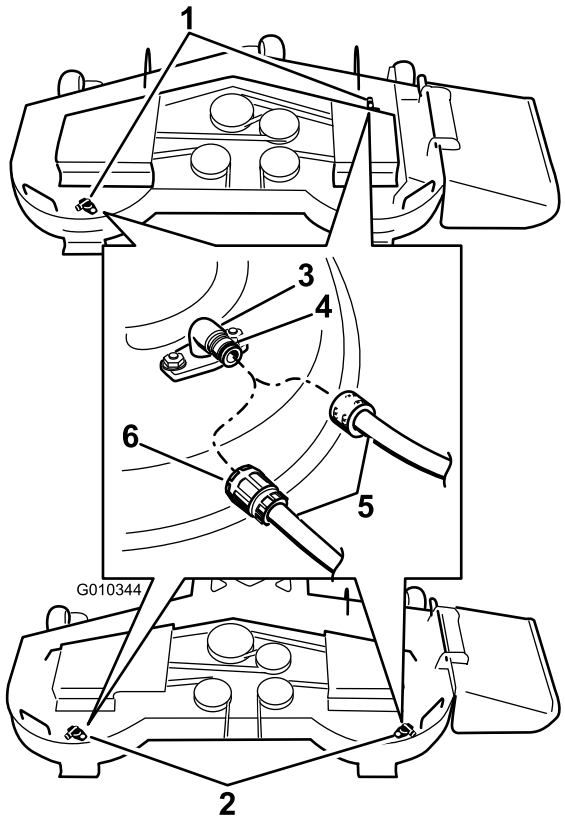

g010344

Figure 72

1. Washout fitting locations on 54 inch decks
2. Washout fitting locations on 48 and 60 inch decks
3. Washout fitting
4. O-ring
5. Hose
6. Coupling

4. Lower the mower to the lowest height-of-cut.
5. Sit on the seat and start the engine. Engage the blade control switch and let the mower run for 1 to 3 minutes.
6. Disengage the blade control switch, stop the engine, and remove the ignition key. Wait for all moving parts to stop.
7. Turn the water off and remove the coupling from the washout fitting.

   Note: If the mower is not clean after one washing, soak it and let it stand for 30 minutes. Then repeat the process.
8. Run the mower again for one to three minutes to remove excess water.

⚠ WARNING

A broken or missing washout fitting could expose you and others to thrown objects or blade contact. Contact with blade or thrown debris can cause injury or death.

- **Replace broken or missing washout fitting immediately, before using mower again.**
- **Never put your hands or feet under the mower or through openings in the mower.**

Waste Disposal

Engine oil, batteries, hydraulic oil, and engine coolant are pollutants to the environment. Dispose of these according to your state and local regulations.

Storage

Cleaning and Storage

1. Disengage the blade control switch (PTO), set the parking brake, and turn the ignition key to Off. Remove the key.
2. Remove grass clippings, dirt, and grime from the external parts of the entire machine, especially the engine and hydraulic system. Clean dirt and chaff from the outside of the engine cylinder head fins and blower housing.

   Important: **You can wash the machine with mild detergent and water. Do not pressure wash the machine. Avoid excessive use of water, especially near the control panel, under the seat, around the engine, hydraulic pumps, and motors.**
3. Check the parking brake operation; refer to Operating the Parking Brake (page 19).
4. Service the air cleaner; refer to Servicing the Air Cleaner (page 32).
5. Grease the machine; refer to Greasing the Bearings (page 31).
6. Change the crankcase oil; refer to Servicing the Engine Oil (page 33).
7. Check the tire pressure; refer to Checking the Tire Pressure (page 40).
8. Change the hydraulic filter; refer to Changing the Hydraulic System Filter and Oil (page 41).
9. Charge the battery; refer to Charging the Battery (page 39).
10. Scrape any heavy buildup of grass and dirt from the underside of the mower, then wash the mower with a garden hose.

    Note: Run the machine with the blade control switch (PTO) engaged and the engine at high idle for 2 to 5 minutes after washing.
11. Check the condition of the blades; refer to Servicing the Cutting Blades (page 44).
12. Prepare the machine for storage when non-use occurs over 30 days. Prepare the machine for storage as follows:

    A. Add a petroleum based stabilizer/conditioner to fuel in the tank. Follow mixing instructions from the stabilizer manufacturer. Do not use an alcohol based stabilizer (ethanol or methanol).

    Note: A fuel stabilizer/conditioner is most effective when mixed with fresh fuel and used at all times.

B. Run the engine to distribute conditioned fuel through the fuel system (5 minutes).

C. Stop the engine, allow it to cool, and drain the fuel tank.

D. Restart the engine and run it until it stops.

E. Dispose of fuel properly. Recycle the fuel according to local codes.

Important: **Do not store stabilizer/conditioned fuel over 90 days.**

13. Check and tighten all bolts, nuts, and screws. Repair or replace any part that is damaged.

14. Paint all scratched or bare metal surfaces. Paint is available from your Authorized Service Dealer.

15. Store the machine in a clean, dry garage or storage area. Remove the key from the ignition switch and keep it out of reach of children or other unauthorized users. Cover the machine to protect it and keep it clean.

Troubleshooting

Problem	Possible Cause	Corrective Action
The starter does not crank.	1. The blade control switch (PTO) is engaged. 2. The parking brake is not on. 3. The drive levers are not in neutral lock position. 4. The operator is not seated. 5. The battery is dead. 6. The electrical connections are corroded or loose. 7. The fuse is blown. 8. The relay or switch is defective.	1. Move the blade control switch (PTO) to disengaged. 2. Set the parking brake. 3. Ensure the drive levers are in the neutral lock position. 4. Sit on the seat. 5. Charge the battery. 6. Check the electrical connections for good contact. 7. Replace the fuse. 8. Contact an Authorized Service Dealer.
The engine will not start, starts hard, or fails to keep running.	1. The fuel tank is empty. 2. The fuel shutoff valve is closed. 3. The oil level in the crankcase is low. 4. The throttle and choke are not in the correct position. 5. There is dirt in fuel filter. 6. Dirt, water, or stale fuel is in the fuel system. 7. The air cleaner is dirty. 8. The seat switch is not functioning properly. 9. The electrical connections are corroded, loose or faulty. 10. The relay or switch is defective. 11. The spark plug wire is not connected. 12. There is a faulty spark plug.	1. Fill the fuel tank. 2. Open the fuel shutoff valve. 3. Add oil to the crankcase. 4. Ensure the throttle control is midway between the “SLOW” and “FAST” positions, and the choke is in the “ON” position for a cold engine or the “OFF” position for a warm engine. 5. Replace the fuel filter. 6. Contact an Authorized Service Dealer. 7. Clean or replace the air cleaner element. 8. Check the seat switch indicator. Replace the seat if needed. 9. Check the electrical connections for good contact. Clean connector terminals thoroughly with electrical contact cleaner, apply dielectric grease and reconnect. 10. Contact an Authorized Service Dealer. 11. Check the spark plug wire connection. 12. Clean, adjust or replace spark plug.
The engine loses power.	1. The engine load is excessive. 2. The air cleaner is dirty. 3. The oil level in the crankcase is low. 4. The cooling fins and air passages above the engine are plugged. 5. The vent hole in the fuel cap is plugged. 6. There is dirt in the fuel filter. 7. There is dirt, water, or stale fuel is in the fuel system.	1. Reduce the ground speed. 2. Clean the air cleaner element. 3. Add oil to the crankcase. 4. Remove the obstruction from the cooling fins and air passages. 5. Clean or replace the fuel cap. 6. Replace the fuel filter. 7. Contact an Authorized Service Dealer.
The engine overheats.	1. The engine load is excessive. 2. The oil level in the crankcase is low. 3. The cooling fins and air passages above the engine are plugged.	1. Reduce the ground speed. 2. Add oil to the crankcase. 3. Remove the obstruction from the cooling fins and air passages.
The mower pulls left or right (with levers fully forward).	1. The tracking needs adjustment. 2. The tire pressure in the drive tires is not correct.	1. Adjust the tracking. 2. Adjust tire pressure in the drive tires.

Problem	Possible Cause	Corrective Action
The machine does not drive.	1. The by pass valves are not closed tight. 2. The pump belt is worn, loose or broken. 3. The pump belt is off a pulley. 4. There is a broken or missing idler spring. 5. The hydraulic oil level is low or too hot.	1. Tighten the by pass valves. 2. Change the belt. 3. Change the belt. 4. Replace the spring. 5. Add hydraulic oil to reservoirs or let it cool down.
The machines vibrates abnormally.	1. The cutting blade(s) is/are bent or unbalanced. 2. The blade mounting bolt is loose. 3. The engine mounting bolts are loose. 4. There is a loose engine pulley, idler pulley, or blade pulley. 5. The engine pulley is damaged. 6. The blade spindle is bent. 7. A motor mount is loose or worn.	1. Install new cutting blade(s). 2. Tighten the blade mounting bolt. 3. Tighten the engine mounting bolts. 4. Tighten the appropriate pulley. 5. Contact an Authorized Service Dealer. 6. Contact an Authorized Service Dealer. 7. Contact an Authorized Service Dealer.
The machine cuts grass at an uneven cutting height.	1. The Blade(s) is/are not sharp. 2. The cutting blade(s) is/are bent. 3. The mower deck is not level. 4. The underside of mower is dirty. 5. The tire pressure is not correct. 6. The blade spindle bent.	1. Sharpen the blade(s). 2. Install new cutting blade(s). 3. Level the mower deck from side-to-side and front-to-rear. 4. Clean the underside of the mower. 5. Adjust the tire pressure. 6. Contact an Authorized Service Dealer.
The blades do not rotate.	1. The mower-deck belt is worn, loose or broken. 2. The mower-deck belt is off a pulley. 3. The pump drive belt is worn, loose or broken. 4. The idler spring is broken or missing.	1. Install a new deck belt. 2. Install mower-deck belt and check the idler pulley, idler arm and spring for correct position and function. 3. Check the belt tension or install a new belt. 4. Replace the spring.

Schematics

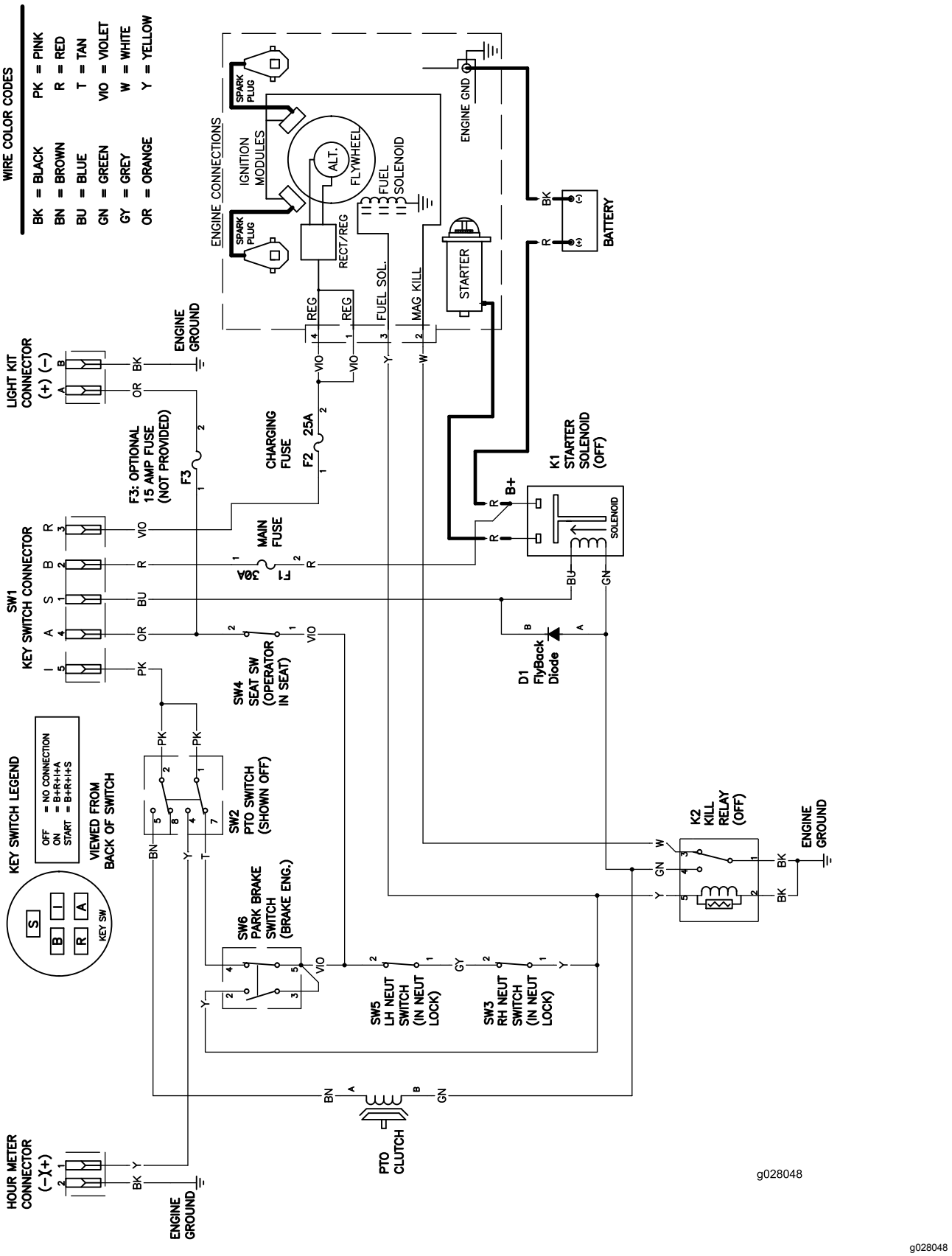

g028048

Wire Diagram (Rev. A)

Notes:

Notes:

TimeCutter
and
TITAN
Mowers

The Toro Total Coverage Warranty

Limited Warranty (see warranty periods below)

Conditions and Products Covered

The Toro Company and its affiliate, Toro Warranty Company, pursuant to an agreement between them, jointly promise to the original purchaser to repair the Toro Products listed below if defective in materials or workmanship.

The following time periods apply from the date of purchase by the original owner:

Products	Warranty Period
TimeCutter and MX Mowers	Residential use[2] – 3 years
• Engines[1] — Residential use	Kawasaki – 3 years Kohler – 3 years Toro – 3 years
TimeCutter and MX Mowers	Commercial use 30 days
• Engines[1] — Commercial use	Kawasaki – 3 years Kohler – 90 days Toro – 90 days
TITAN Mowers – Residential or Commercial use	3 years or 300 hours[3]
• Engines[1] — Residential or Commercial use	Kawasaki – 3 years
• Frame	Lifetime (original owner only)[4]
TITAN MX5400 and MX600 Mowers – Residential or Commercial use	4 years or 400 hours[3]
• Engines[1] — Residential or Commercial use	Kawasaki – 3 years
• Frame	Lifetime (original owner only)[4]
All Mowers	
• Attachments	1 year
• Battery	90 days Parts and Labor 1 year Parts only
• Belts and Tires	90 days

[1]Some engines used on Toro Products are warranted by the engine manufacturer.

[2]Residential use means use of the product on the same lot as your home. Use at more than one location is considered commercial use and the commercial use warranty would apply.

[3]Whichever occurs first.

[4]Lifetime Frame Warranty - If the main frame, consisting of the parts welded together to form the tractor structure that other components such as the engine are secured to, cracks or breaks in normal use, it will be repaired or replaced, at Toro's option, under warranty at no cost for parts and labor. Frame failure due to misuse or abuse and failure or repair required due to rust or corrosion are not covered.

Warranty may be denied if the hour meter is disconnected, altered, or shows signs of being tampered with.

Owner Responsibilities

You must maintain your Toro Product by following the maintenance procedures described in the *Operator's Manual*. Such routine maintenance, whether performed by a dealer or by you, is at your expense.

Instructions for Obtaining Warranty Service

If you think that your Toro Product contains a defect in materials or workmanship, follow this procedure:

1. Contact any Authorized Toro Service Dealer to arrange service at their dealership. To locate a dealer convenient to you, refer to the *Yellow Pages* of your telephone directory (look under “Lawn Mowers”) or access our web site at www.Toro.com. You may also call the numbers listed in item #3 to use the 24-hour Toro Dealer locator system.
2. Bring the product and your proof of purchase (sales receipt) to the Service Dealer. The dealer will diagnose the problem and determine if it is covered under warranty.
3. If for any reason you are dissatisfied with the Service Dealer’s analysis or with the assistance provided, contact us at:

   Customer Care Department, RLC Division
   Toro Warranty Company
   8111 Lyndale Avenue South
   Bloomington, MN 55420-1196
   Toll free at 866-216-6029 (U.S. customers)
   Toll free at 866-216-6030 (Canadian customers)

Items and Conditions Not Covered

There is no other express warranty except for special emission system coverage and engine warranty coverage on some products. This express warranty does not cover the following:

- Cost of regular maintenance service or parts, such as filters, fuel, lubricants, oil changes, spark plugs, air filters blade sharpening or worn blades, cable/linkage adjustments, or brake and clutch adjustments
- Components failing due to normal wear
- Any product or part which has been altered or misused or neglected and requires replacement or repair due to accidents or lack of proper maintenance
- Pickup and delivery charges
- Repairs or attempted repairs by anyone other than an Authorized Toro Service Dealer
- Repairs necessary due to failure to follow recommended fuel procedure (consult *Operator's Manual* for more details)
  - Removing contaminants from the fuel system is not covered
  - Use of old fuel (more than one month old) or fuel which contains more than 10% ethanol or more that 15% MTBE
  - Failure to drain the fuel system prior to any period of non-use over one month

General Conditions

All repairs covered by these warranties must be performed by an Authorized Toro Service Dealer using Toro approved replacement parts.

Neither The Toro Company nor Toro Warranty Company is liable for indirect, incidental or consequential damages in connection with the use of the Toro Products covered by this warranty, including any cost or expense of providing substitute equipment or service during reasonable periods of malfunction or non-use pending completion of repairs under this warranty.

All implied warranties of merchantability (that the product is fit for ordinary use) and fitness for use (that the product is fit for a particular purpose) are limited to the duration of the express warranty.

Some states do not allow exclusions of incidental or consequential damages, or limitations on how long an implied warranty lasts, so the above exclusions and limitations may not apply to you.

This warranty gives you specific legal rights, and you may also have other rights which vary from state to state.

Countries Other than the United States or Canada

Customers who have purchased Toro products outside the United States or Canada should contact their Toro Distributor (Dealer) to obtain guarantee policies for your country, province, or state. If for any reason you are dissatisfied with your Distributor's service or have difficulty obtaining guarantee information, contact the Toro importer. If all other remedies fail, you may contact us at Toro Warranty Company.

Australian Consumer Law: Australian customers will find details relating to the Australian Consumer Law either inside the box or at your local Toro Dealer.