Form No. 3410-740 Rev B

TORO®

Count on it.

Operator's Manual

Z Master® Professional 6000 Series Riding Mower

with 132cm or 152cm TURBO FORCE® Side Discharge Mower

Model No. 74919TE—Serial No. 400000000 and Up

Model No. 74925TE—Serial No. 400000000 and Up

Register at www.Toro.com.
Original Instructions (EN)

CE

3410-740 B

This product complies with all relevant European directives; for details, please see the separate product specific Declaration of Conformity (DOC) sheet.

This spark ignition system complies with Canadian ICES-002

⚠ WARNING

Removing standard original equipment parts and accessories may alter the warranty, traction, and safety of the machine. Failure to use original Toro parts could cause serious injury or death. Making unauthorized changes to the engine, fuel or venting system, may violate regulations.

Replace all parts including, but not limited to, tires, belts, blades, and fuel system components with original Toro parts.

Please refer to the engine manufacturer's information included with the machine.

Introduction

This rotary-blade, riding lawn mower is intended to be used by residential homeowners or professional, hired operators. It is designed primarily for cutting grass on well-maintained lawns on residential or commercial properties. It is not designed for cutting brush or for agricultural uses.

Read this information carefully to learn how to operate and maintain your product properly and to avoid injury and product damage. You are responsible for operating the product properly and safely.

You may contact Toro directly at www.Toro.com for product safety and operation training materials, accessory information, help finding a dealer, or to register your product.

Whenever you need service, genuine Toro parts, or additional information, contact an Authorized Service Dealer or Toro Customer Service and have the model and serial numbers of your product ready. Figure 1 identifies the location of the model and serial numbers on the product. Write the numbers in the space provided.

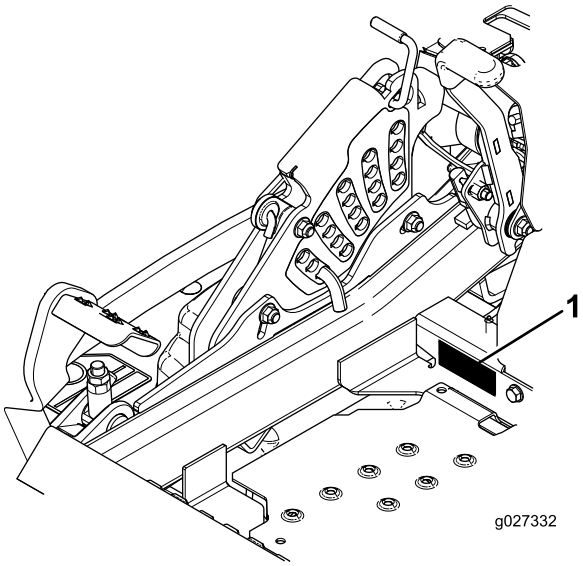

g027332

Figure 1

1. Model and serial number location

Model No. _____

Serial No. _____

This manual identifies potential hazards and has safety messages identified by the safety-alert symbol (Figure 2), which signals a hazard that may cause serious injury or death if you do not follow the recommended precautions.

g000502

Figure 2

1. Safety-alert symbol

This manual uses 2 words to highlight information. **Important** calls attention to special mechanical information and **Note** emphasizes general information worthy of special attention.

© 2018—The Toro® Company
8111 Lyndale Avenue South
Bloomington, MN 55420

Contact us at www.Toro.com.
Printed in the USA
All Rights Reserved

Contents

Safety 4
General Safety 4
Slope Indicator 5
Safety and Instructional Decals 6
Product Overview 13
Controls 13
Specifications 14
Before Operation 15
Before Operation Safety 15
Recommended Fuel 15
Using Stabilizer/Conditioner 16
Filling the Fuel Tank 16
Checking the Engine-Oil Level 17
Breaking in a New Machine 17
Using the Rollover Protection System (ROPS) 17
Think Safety First 18
Using the Safety-Interlock System 18
Positioning the Seat 19
Unlatching the Seat 19
Changing the Seat Suspension 20
During Operation 20
During Operation Safety 20
Operating the Parking Brake 21
Operating the Mower Blade-Control Switch (PTO) 22
Operating the Throttle 22
Operating the Choke 22
Operating the Ignition Switch 23
Starting and Shutting Off the Engine 23
Using the Motion-Control Levers 25
Driving the Machine 25
Stopping the Machine 27
Using the Side Discharge 27
Adjusting the Height of Cut 27
Adjusting the Anti-Scalp Rollers 28
Adjusting the Flow Baffle Cam Locks 29
Positioning the Flow Baffle 29
Operating Tips 31
After Operation 32
After Operation Safety 32
Using the Fuel-Shutoff Valve 32
Using the Drive-Wheel-Release Valves 32
Transporting the Machine 33
Loading the Machine 34
Using the Z Stand™ 35
Maintenance 37
Recommended Maintenance Schedule(s) 37
Pre-Maintenance Procedures 38
Maintenance and Storage Safety 38
Releasing the Mower-Deck Curtain 38
Removing the Sheet-Metal Guard 39
Lubrication 39
Adding Light Oil or Spray Lubrication 39
Greasing the Mower 40
Lubricating the Caster-Wheel Hubs 41
Engine Maintenance 42
Engine Safety 42
Servicing the Air Cleaner 42
Servicing the Engine Oil 43
Servicing the Spark Plug 46
Checking the Spark Arrester 47
Fuel System Maintenance 47
Replacing the Fuel Filter 47
Servicing the Fuel Tank 48
Electrical System Maintenance 48
Electrical System Safety 48
Servicing the Battery 48
Servicing the Fuses 50
Drive System Maintenance 50
Checking the Seat Belt 50
Checking the Rollover Protection System (ROPS) Knobs 50
Adjusting the Tracking 51
Checking the Tire Pressure 51
Checking the Wheel-Lug Nuts 52
Checking the Wheel-Hub Slotted Nut 52
Adjusting the Caster-Pivot Bearing 52
Using the Clutch Shim 53
Cooling System Maintenance 55
Cleaning the Engine Screen and Engine-Oil Cooler 55
Cleaning the Engine-Cooling Fins and Shrouds 55
Checking and Cleaning the Hydraulic Unit Shrouds 56
Brake Maintenance 57
Adjusting the Parking Brake 57
Belt Maintenance 58
Inspecting the Belts 58
Replacing the Mower Belt 58
Replacing the Hydraulic Pump-Drive Belt 59
Controls System Maintenance 60
Adjusting the Control-Handle Position 60
Adjusting the Motion-Control Linkage 60
Adjusting the Motion-Control Damper 61
Adjusting the Motion Control Neutral-Lock Pivot 62
Hydraulic System Maintenance 62
Hydraulic System Safety 62
Servicing the Hydraulic System 62
Mower Deck Maintenance 65
Leveling the Mower Deck 65
Servicing the Cutting Blades 68
Removing the Mower Deck 70
Replacing the Grass Deflector 72
Cleaning 72
Cleaning under the Mower 72
Disposing of Waste 72
Storage 73
Cleaning and Storing the Machine 73
Troubleshooting 74
Schematics 76

Safety

This machine has been designed in accordance with EN ISO 5395:2013.

General Safety

This product is capable of amputating hands and feet and of throwing objects. Always follow all safety instructions to avoid serious personal injury.

Using this product for purposes other than its intended use could prove dangerous to you and bystanders.

- Read and understand the contents of this *Operator's Manual* before you start the engine. Ensure that everyone using this product knows how to use it and understands the warnings.
- Do not put your hands or feet near moving components of the machine.
- Do not operate the machine without all guards and other safety protective devices in place and working on the machine.
- Keep clear of any discharge opening. Keep bystanders a safe distance away from the machine.
- Keep children out of the operating area. Never allow children to operate the machine.
- Stop the machine and shut off the engine before servicing, fueling, or unclogging the machine.

Improperly using or maintaining this machine can result in injury. To reduce the potential for injury, comply with these safety instructions and always pay attention to the safety-alert symbol, which means Caution, Warning, or Danger—personal safety instruction. Failure to comply with these instructions may result in personal injury or death.

You can find additional items of safety information in their respective sections throughout this manual.

Slope Indicator

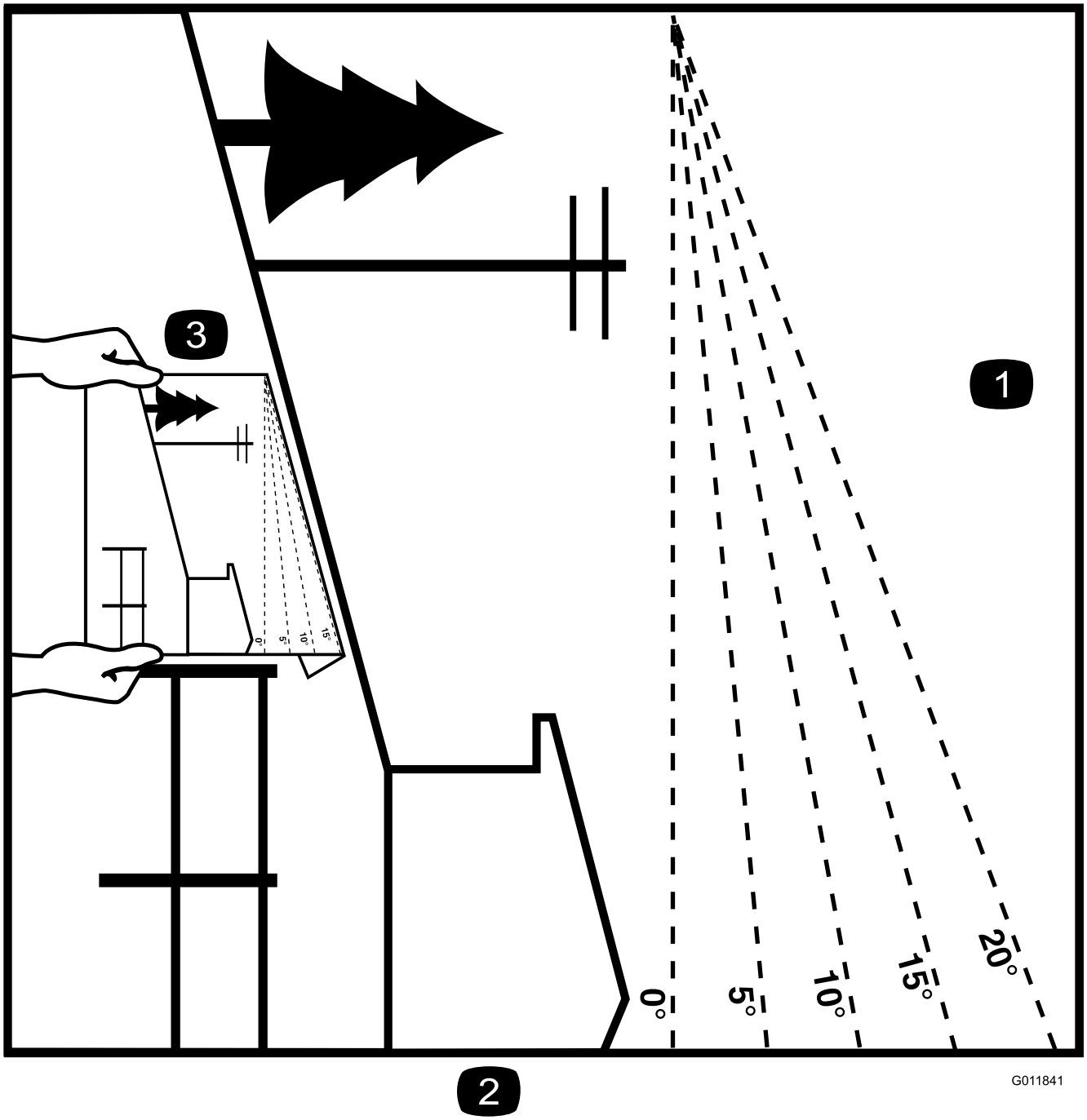

Figure 3

This page may be copied for personal use.

1. The maximum slope you can safely operate the machine on is **15 degrees**. Use the slope chart to determine the degree of slope of hills before operating. **Do not operate this machine on a slope greater than 15 degrees.** Fold along the appropriate line to match the recommended slope.
2. Align this edge with a vertical surface, a tree, building, fence pole, etc.
3. Example of how to compare slope with folded edge

Safety and Instructional Decals

Safety decals and instructions are easily visible to the operator and are located near any area of potential danger. Replace any decal that is damaged or missing.

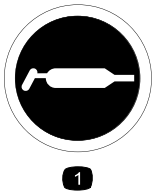

decal58-6520

58-6520

1. Grease

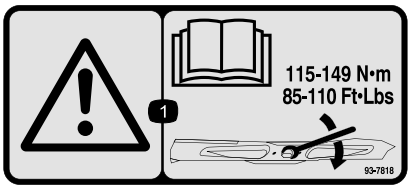

decal93-7818

93-7818

1. Warning—read the *Operator's Manual* for instructions on torquing the blade bolt/nut to 115 to 149 N·m (85 to 110 ft-lb).

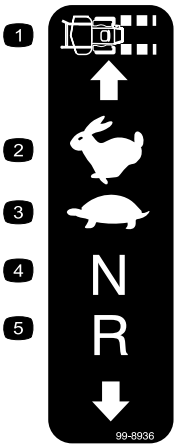

decal99-8936

99-8936

1. Machine speed
2. Fast
3. Slow
4. Neutral
5. Reverse

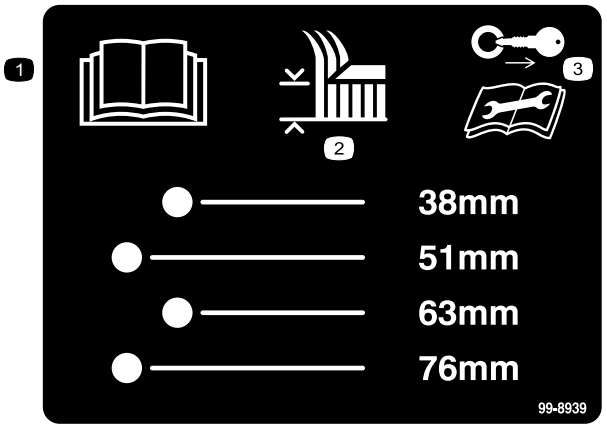

decal99-8939

99-8939

1. Read the *Operator's Manual*.
2. Height of cut
3. Remove the ignition key and read the instructions before servicing or performing maintenance.

decal106-2655

106-2655

1. Warning—do not touch or approach moving belts; remove the ignition key and read the instructions before servicing or performing maintenance.

decal106-5517

106-5517

1. Warning–Do not touch the hot surface.

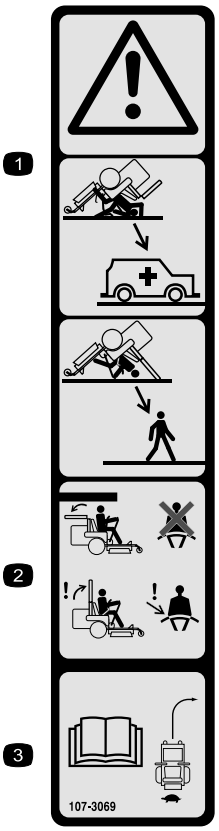

decal107-3069

107-3069

1. Warning–there is no rollover protection when the roll bar is down.
2. To avoid injury or death from a rollover accident, keep the roll bar in the fully raised and locked position and wear the seat belt. Lower the roll bar only when absolutely necessary; do not wear the the seat belt when the roll bar is down.
3. Read the *Operator's Manual*; drive slowly and carefully.

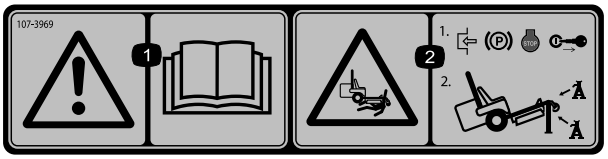

decal107-3969

107-3969

1. Warning—read the *Operator's Manual*.
2. Crushing hazard, mower—engage the parking brake, stop the engine, and remove the ignition key before working under the mower.

---

decalbatterysymbols

Battery Symbols

Some or all of these symbols are on your battery

1. Explosion hazard
2. No fire, open flame, or smoking.
3. Caustic liquid/chemical burn hazard
4. Wear eye protection
5. Read the *Operator's Manual.*
6. Keep bystanders a safe distance from the battery.
7. Wear eye protection; explosive gases can cause blindness and other injuries
8. Battery acid can cause blindness or severe burns.
9. Flush eyes immediately with water and get medical help fast.
10. Contains lead; do not discard.

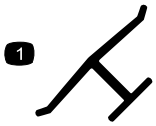

decaloemmarkt

Manufacturer's Mark

1. Indicates the blade is identified as a part from the original machine manufacturer.

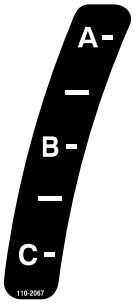

decal110-2067

110-2067

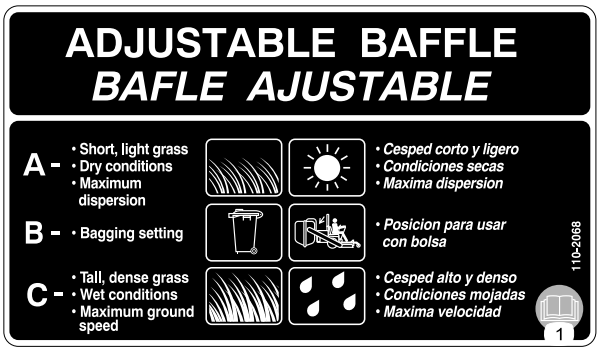

decal110-2068

110-2068

1. Read the *Operator's Manual*.

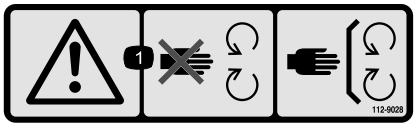

decal112-9028

112-9028

1. Warning—stay away from moving parts; keep all guards in place.

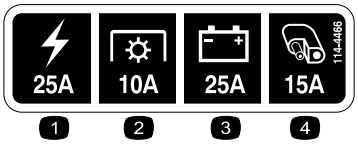

decal114-4466

114-4466

1. Main (25 A)
2. PTO (10 A)
3. Charge (25 A)
4. Auxiliary (15 A)

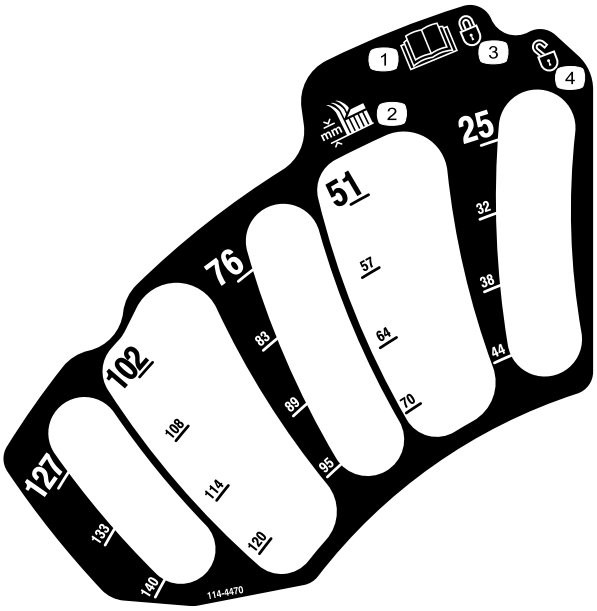

decal114-4470

114-4470

1. Read the *Operator's Manual*.
2. Height of cut
3. Locked
4. Unlocked

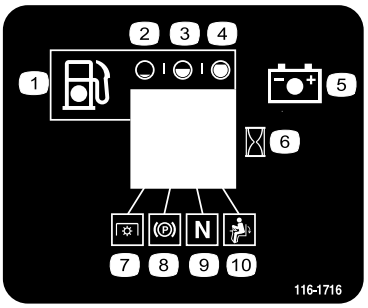

decal116-1716

116-1716

1. Fuel
2. Empty
3. Half
4. Full
5. Battery
6. Hour meter
7. PTO
8. Parking brake
9. Neutral
10. Operator-presence switch

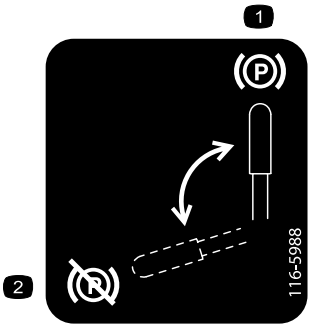

decal116-5988

116-5988

1. Parking brake—engaged
2. Parking brake—disengaged

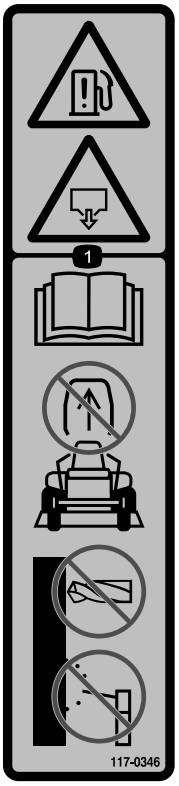

decal117-0346

117-0346

1. Fuel leak hazard—read the *Operator's Manual*; do not attempt to remove the roll bar; do not weld, drill, or modify the roll bar in any way.

decal117-3811

117-3811

1. Read the *Operator's Manual*.
2. Hydraulic oil

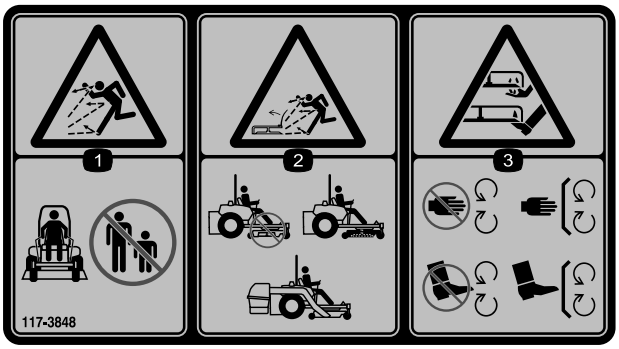

decal117-3848

117-3848

1. Thrown object hazard—keep bystanders a safe distance away from the machine.
2. Thrown object hazard, mower-do not operate the machine without the deflector, discharge cover, or grass collection system in place.
3. Cutting/dismemberment of hand or foot—stay away from moving parts; keep all guards and shields in place.

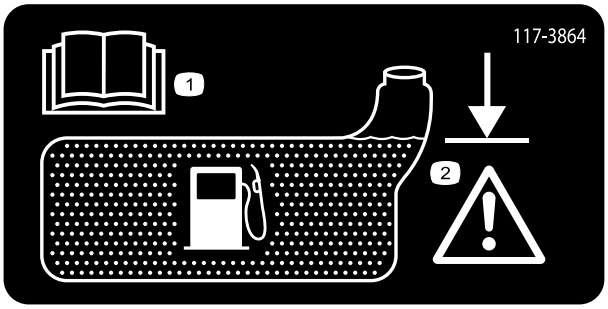

decal117-3864

117-3864

1. Read the *Operator's Manual.*
2. Fill to bottom of filler neck; warning—do not overfill the tank.

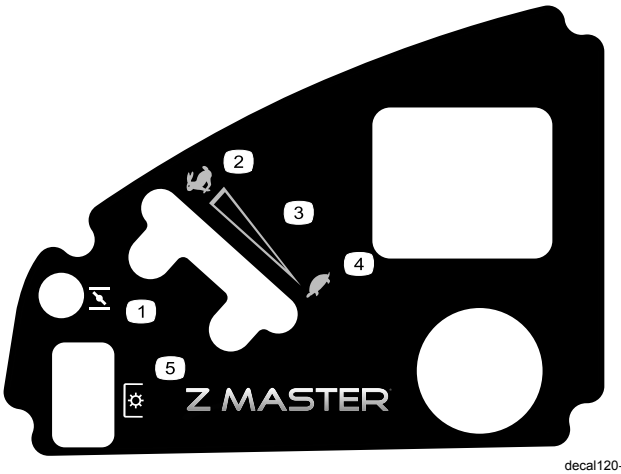

decal120-5897

120-5897

1. Choke
2. Fast
3. Continuous-variable setting
4. Slow
5. Power takeoff (PTO), Blade-control switch

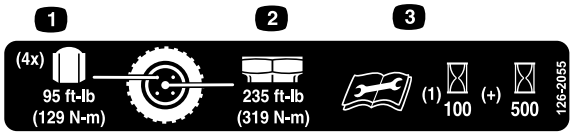

decal126-2055

126-2055

1. Wheel-lug nut torque 129 N·m (95 ft-lb) (4x)
2. Wheel-hub nut torque 319 N·m (235 ft-lb)
3. Read and understand the *Operator's manual* before performing any maintenance, check torque after first 100 hours then every 500 hours thereafter.

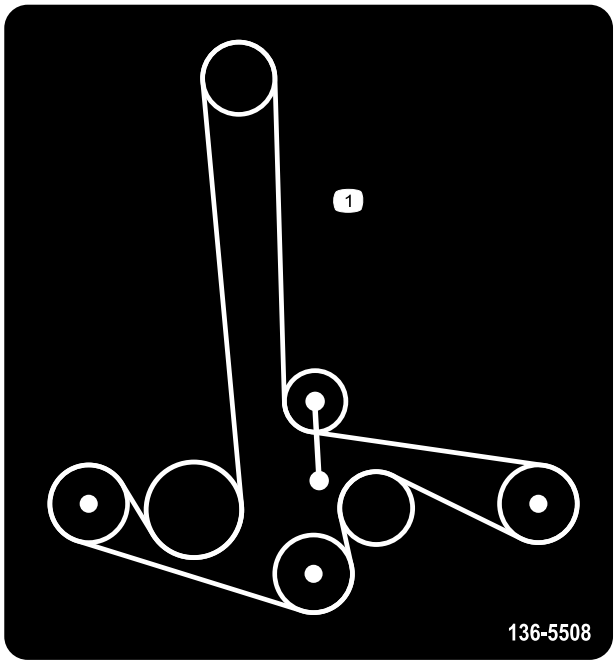

decal136-5508

136-5508

1. Belt routing

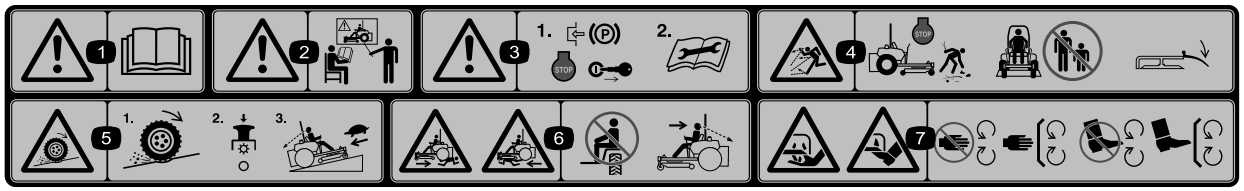

decal114-4468

114–4468

1. Warning—read the *Operator's Manual.*
2. Warning—do not operate this machine unless you are trained.
3. Warning—engage the parking brake, stop the engine and remove the ignition key; read the instructions before servicing or performing maintenance.
4. Thrown object hazard—Stop the engine and pick up debris before operating, keep bystanders a safe distance from the machine, keep deflector in place
5. Loss of traction/control hazard, slopes—loss of traction/control on a slope, disengage the blade control switch (PTO), proceed off the slope slowly.
6. Crushing/dismemberment hazard of bystanders—do not carry passengers, look forward and down when operating the machine, look behind and down when reversing.
7. Cutting/dismemberment hazard; hand or foot—stay away from moving parts and keep all guards and shields in place.

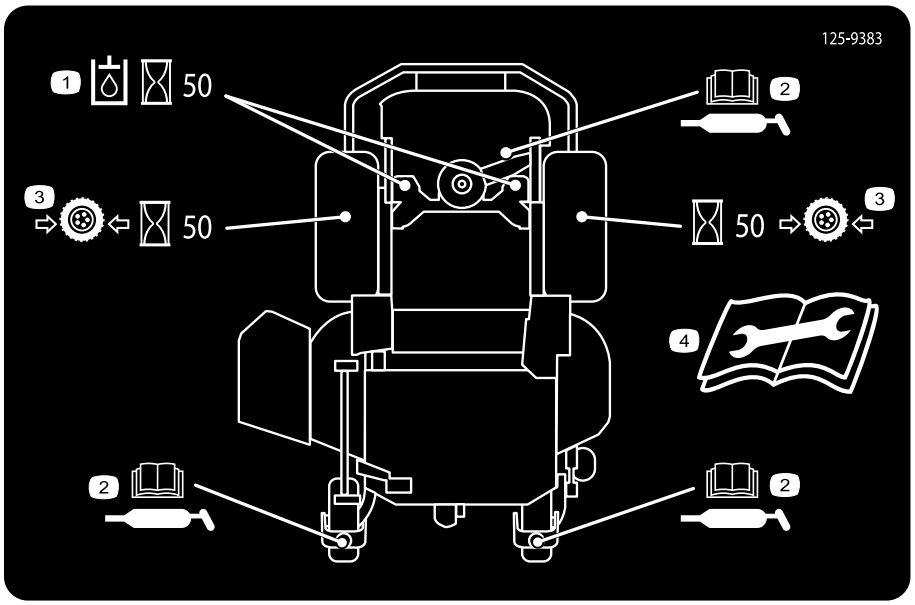

decal125-9383

125-9383

1. Check the hydraulic fluid every 50 operating hours.
2. Read the *Operator's Manual* for information on lubricating the machine.
3. Check the tire pressure every 50 operating hours.
4. Read the *Operator's Manual* before servicing or performing maintenance.

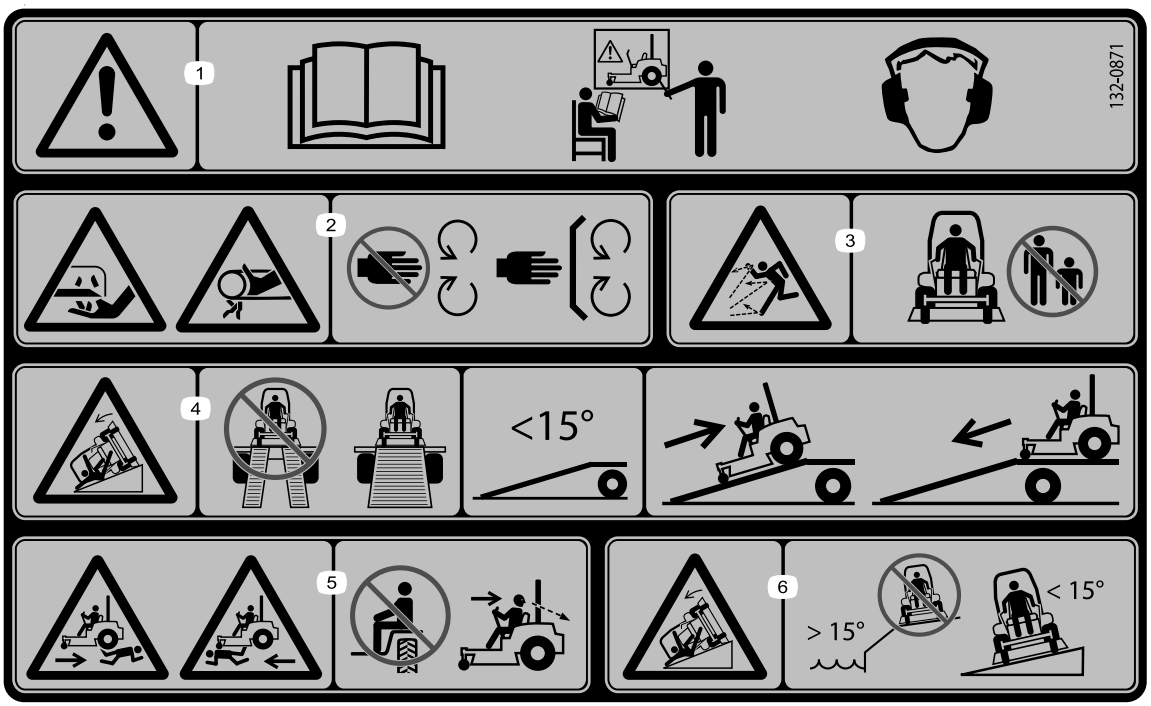

decal132-0871

132-0871

Note: This machine complies with the industry standard stability test in the static lateral and longitudinal tests with the maximum recommended slope indicated on the decal. Review the instructions for operating the machine on slopes in the *Operator's Manual* as well as the conditions in which you would operate the machine to determine whether you can operate the machine in those conditions on that day and at that site. Changes in the terrain can result in a change in slope operation for the machine. If possible, keep the cutting units lowered to the ground while operating the machine on slopes. Raising the cutting units while operating on slopes can cause the machine to become unstable.

1. Warning—read the *Operator's Manual*; do not operate this machine unless you are trained; wear hearing protection.
2. Cutting, dismembering, and entanglement hazard—keep hands away from moving parts; keep all guards and shields in place.
3. Thrown object hazard—keep bystanders away.
4. Ramp hazard—when loading onto a trailer, do not use dual ramps; only use a singular ramp wide enough for the machine and that has an incline less than 15°; back up the ramp (in reverse) and drive forward off the ramp.
5. Bodily harm hazard—do not carry passengers; look behind you when mowing in reverse.
6. Tipping hazard on slopes—do not use on slopes near open water; do not use on slopes greater than 15°.

Product Overview

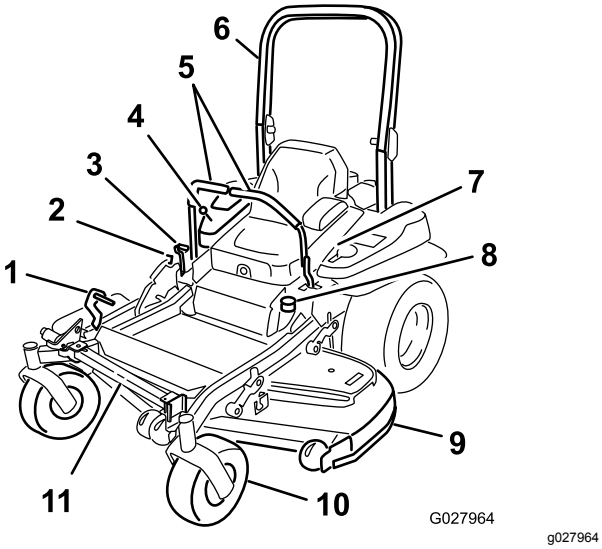

Figure 4

1. Height-of-cut deck-lift pedal
2. Transport lock
3. Parking-brake lever
4. Controls
5. Motion-control levers
6. Roll bar
7. Seat belt
8. Fuel cap
9. Mower deck
10. Caster wheel
11. Z Stand

Controls

Become familiar with all the controls before you start the engine and operate the machine (Figure 4 and Figure 5).

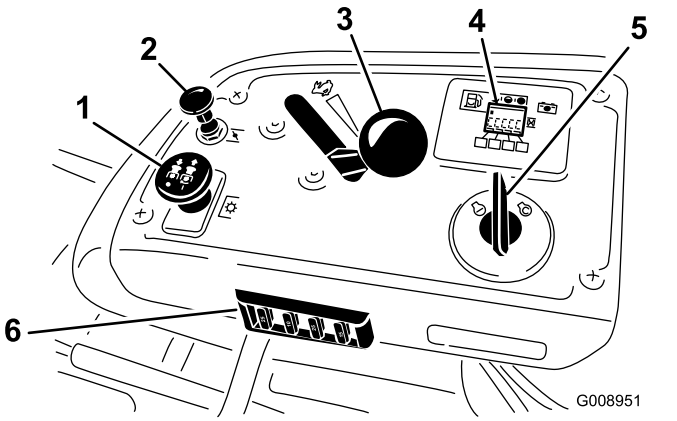

Figure 5

1. PTO switch
2. Choke control
3. Throttle control
4. Hour meter/safety-interlock display
5. Ignition switch
6. Fuses

Hour Meter

The hour meter records the number of hours the engine has operated. It operates when the engine is running. Use these times for scheduling regular maintenance (Figure 6).

Fuel Gauge

The fuel gauge is located with the hour meter, and the bars light up when the ignition switch is in the ON position (Figure 6).

The indicator light appears when the fuel level is low (approximately 1 gallon remaining in the fuel tank).

Safety-Interlock Indicators

There are symbols on the hour meter that indicate with a black triangle that the interlock component is positioned correctly (Figure 6).

Battery-Indicator Light

If you turn the ignition key to the ON position for a few seconds, the battery voltage displays in the area where the hours are normally displayed.

The battery light turns on when the ignition is turned on and when the charge is below the correct operating level (Figure 6).

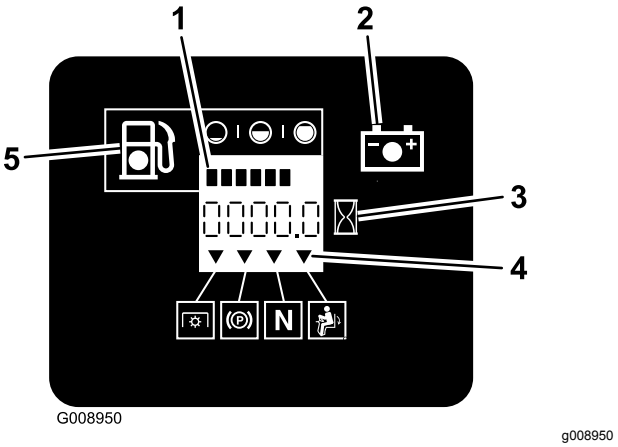

Figure 6

1. Fuel gauge (bars)
2. Battery light
3. Hour meter
4. Safety-interlock symbols
5. Low fuel-indicator light

Throttle Control

The throttle controls the engine speed, and it has a continuous-variable setting from the SLOW to FAST position (Figure 5).

Choke Control

Use the choke to start a cold engine. Pull the choke knob up to engage it. Push the choke knob down to disengage it (Figure 5).

Blade-Control Switch (Power Takeoff)

The blade-control switch (PTO) engages and disengages power to the mower blades (Figure 5).

Ignition Switch

Use this switch to start the mower engine. It has 3 positions: START, RUN, and OFF.

Motion-Control Levers

Use the motion-control levers to drive the machine forward, reverse, and turn either direction.

Neutral-Lock Position

Use the NEUTRAL-LOCK position with the safety-interlock system to engage and to determine the NEUTRAL position.

Fuel-Shutoff Valve

Close the fuel-shutoff valve (under the seat) when transporting or storing the mower.

Attachments/Accessories

A selection of Toro approved attachments and accessories is available for use with the machine to enhance and expand its capabilities. Contact your Authorized Service Dealer or Distributor or go to www.Toro.com for a list of all approved attachments and accessories.

Specifications

Note: Specifications and design are subject to change without notice.

Width:

	132 cm (52 inch) Deck	**152 cm (60 inch) Deck**
Cutting Width	132 cm (52 inches)	152 cm (60 inches)
Without Deck	116 cm (46 inches)	134.6 cm (53.0 inches)
Deflector—Up	146 cm (58 inches)	156.8 cm (61.7 inches)
Deflector—Down	172 cm (68 inches)	192.2 cm (75.7 inches)

Length:

	132 cm (52 inch) Deck	**152 cm (60 inch) Deck**
Roll Bar—Up	201 cm (79 inches)	211.1 cm (83.1 inches)
Roll Bar—Down	206 cm (81 inches)	215.4 cm (84.8 inches)

Height:

Roll Bar—Up	**Roll Bar—Down**
179.1 cm (70.5 inches)	118.9 cm (46.8 inches)

Weight:

Model	**Weight**
74919TE	537 kg (1183 lb)
74925TE	590 kg (1301 lb)

Operation

Note: Determine the left and right sides of the machine from the normal operating position.

Before Operation

Before Operation Safety

General Safety

- Never allow children or untrained people to operate or service the machine. Local regulations may restrict the age of the operator. The owner is responsible for training all operators and mechanics.
- Become familiar with the safe operation of the equipment, operator controls, and safety signs.
- Know how to stop the machine and shut off the engine quickly.
- Check that operator-presence controls, safety switches, and shields are attached and functioning properly. Do not operate the machine unless they are functioning properly.
- Before mowing, always inspect the machine to ensure that the blades, blade bolts, and cutting assemblies are in good working condition. Replace worn or damaged blades and bolts in sets to preserve balance.
- Inspect the area where you will use the machine and remove all objects that the machine could throw.
- Evaluate the terrain to determine the appropriate equipment and any attachments or accessories required to operate the machine properly and safely.

Fuel Safety

- To avoid personal injury or property damage, use extreme care in handling fuel. Fuel vapors are flammable and explosive.
- Extinguish all cigarettes, cigars, pipes, and other sources of ignition.
- Use only an approved fuel container.
- Do not remove the fuel cap or add fuel to the fuel tank while the engine is running or while hot.
- Do not refuel the machine indoors.
- Do not store the machine or fuel container where there is an open flame, spark, or pilot light, such as on a water heater or on other appliances.
- Do not fill containers inside a vehicle or on a truck or trailer bed with a plastic liner. Always place containers on the ground, away from your vehicle before filling.
- Remove the equipment from the truck or trailer and refuel it while it is on the ground. If this is not possible, then refuel from a portable container rather than a fuel-dispenser nozzle.
- Do not operate the machine without the entire exhaust system in place and in proper working condition.
- Keep the fuel-dispenser nozzle in contact with the rim of the fuel tank or container opening at all times until fueling is complete. Do not use a nozzle lock-open device.
- If you spill fuel on your clothing, change your clothing immediately. Wipe up any fuel that spills.
- Never overfill the fuel tank. Replace the fuel cap and tighten it securely.
- Store fuel in an approved container and keep it out of the reach of children. Never buy more than a 30-day supply of fuel.
- Do not fill the fuel tank completely full. Add fuel to the fuel tank until the level is 6 to 13 mm (1/4 to 1/2 inch) below the bottom of the filler neck. This empty space in the tank allows fuel to expand.
  - Avoid prolonged breathing of vapors.
  - Keep your face away from the nozzle and fuel tank opening.
  - Avoid contact with skin; wash off spills with soap and water.

Recommended Fuel

- For best results, use only clean, fresh (less than 30 days old), unleaded gasoline with an octane rating of 87 or higher ((R+M)/2 rating method).
- **Ethanol**: Gasoline with up to 10% ethanol (gasohol) or 15% MTBE (methyl tertiary butyl ether) by volume is acceptable. Ethanol and MTBE are not the same. Gasoline with 15% ethanol (E15) by volume is not approved for use. **Never use gasoline that contains more than 10% ethanol by volume**, such as E15 (contains 15% ethanol), E20 (contains 20% ethanol), or E85 (contains up to 85% ethanol). Using unapproved gasoline may cause performance problems and/or engine damage which may not be covered under warranty.
- **Do not** use gasoline containing methanol.
- **Do not** store fuel either in the fuel tank or fuel containers over the winter unless you use a fuel stabilizer.
- **Do not** add oil to gasoline.

Using Stabilizer/Conditioner

Use a fuel stabilizer/conditioner in the machine to provide the following benefits:

- Keeps fuel fresh during storage of 90 days or less (drain the fuel tank when storing the machine for more than 90 days)
- Cleans the engine while it runs
- Eliminates gum-like varnish buildup in the fuel system, which causes hard starting

  Important: **Do not use fuel additives containing methanol or ethanol.**

  Add the correct amount of fuel stabilizer/conditioner to the fuel.

  Note: A fuel stabilizer/conditioner is most effective when mixed with fresh fuel. To minimize the chance of varnish deposits in the fuel system, use fuel stabilizer at all times.

Filling the Fuel Tank

1. Park the machine on level ground.
2. Shut off the engine and engage the parking brake.
3. Clean around the fuel-tank cap.
4. Fill the fuel tank to the bottom of the filler neck (Figure 7).

   Note: Do not fill the fuel tank completely full. The empty space in the tank allows the gasoline to expand.

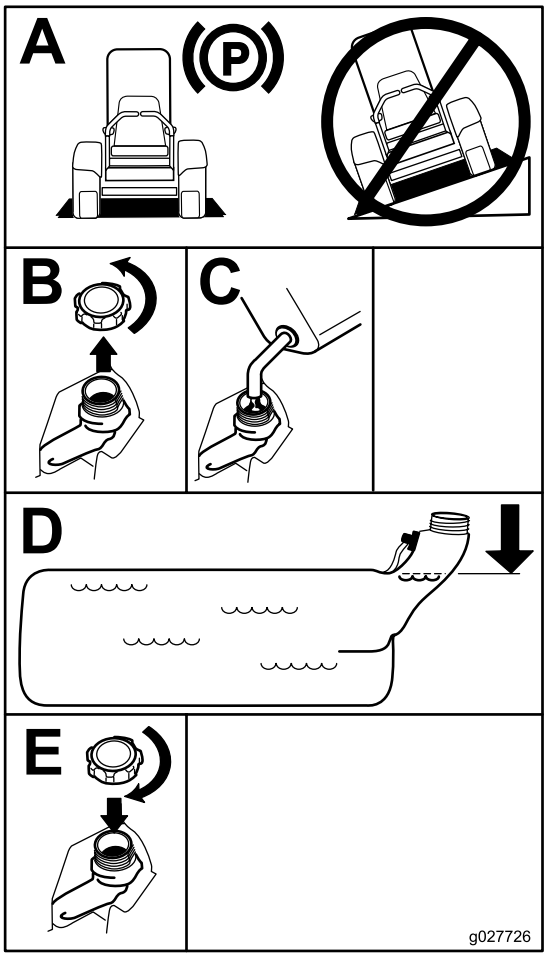

g027726

Figure 7

Checking the Engine-Oil Level

Before you start the engine and use the machine, check the oil level in the engine crankcase; refer to Checking the Engine-Oil Level (page 17).

Breaking in a New Machine

New engines take time to develop full power. Mower decks and drive systems have higher friction when new, placing additional load on the engine. Allow 40 to 50 hours of break-in time for new machines to develop full power and best performance.

Using the Rollover Protection System (ROPS)

⚠ WARNING

To avoid injury or death from rollover: keep the roll bar in the fully raised locked position and use the seat belt.

Ensure that the seat is secured to the machine.

⚠ WARNING

There is no rollover protection when the roll bar is in the down position.

- **Lower the roll bar only when absolutely necessary.**
- **Do not wear the seat belt when the roll bar is in the down position.**
- **Drive slowly and carefully.**
- **Raise the roll bar as soon as clearance permits.**
- **Check carefully for overhead clearances (i.e., branches, doorways, electrical wires) before driving under any objects and do not contact them.**

Important: **Lower the roll bar only when absolutely necessary.**

Important: **Ensure that the seat is secured to the machine.**

1. To lower the roll bar, apply forward pressure to the upper part of the roll bar.
2. Pull both knobs out and rotate them 90° so they are not engaged (Figure 8).
3. Lower the roll bar to the down position (Figure 8).

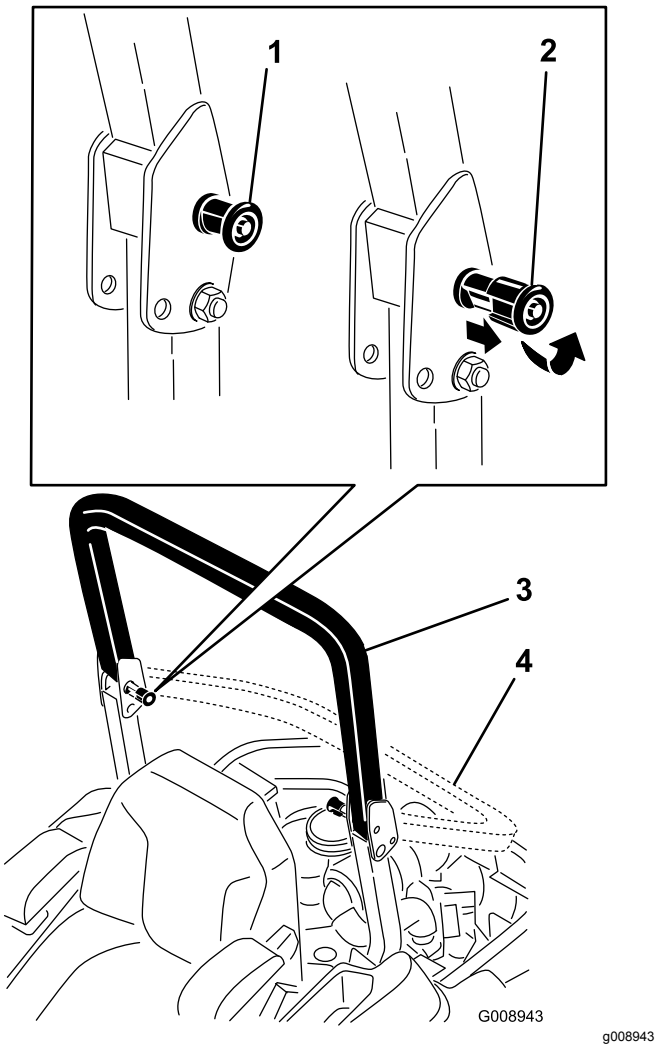

Figure 8

1. ROPS knob
2. Pull the ROPS knob out and rotate 90 degrees
3. Roll bar in the upright position
4. Roll bar in the folded position

4. To raise the roll bar, raise the roll bar to the operate position, rotate the knobs so that they move partially into the grooves (Figure 8).
5. Raise the roll bar to the full upright position while pushing on the upper roll bar and the pins snap into position when the holes align with the pins (Figure 8).

   Important: **Always use the seat belt with the roll bar in the raised position.**
6. Push on the roll bar and ensure that both pins are engaged.

Think Safety First

Please read all safety instructions and symbols in the safety section. Knowing this information could help you or bystanders avoid injury.

⚠ DANGER

Operating the machine on wet grass or steep slopes can cause sliding and loss of control.

- **Do not operate on slopes greater than 15 degrees.**
- **Reduce speed and use extreme caution on slopes.**
- **Do not operate the machine near water.**

⚠ DANGER

Wheels dropping over edges can cause rollovers, which may result in serious injury, death, or drowning.

Do not operate the machine near drop-offs.

⚠ DANGER

Operating the machine while the roll bar is down may lead to serious injury or death in the event of a rollover.

Always keep the roll bar in the fully raised and locked position and use the seat belt.

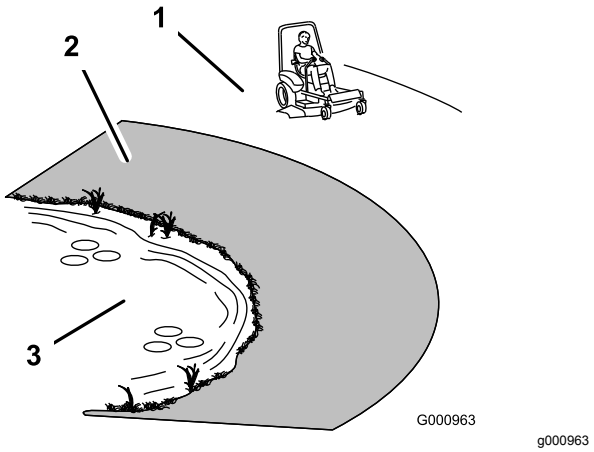

Figure 9

1. Safe Zone—use the machine here on slopes less than 15 degrees or flat areas.
2. Danger Zone—use a walk-behind mower and/or a hand trimmer on slopes greater than 15 degrees and near drop-offs or water.
3. Water

⚠ CAUTION

This machine produces sound levels in excess of 85 dBA at the operator's ear and can cause hearing loss through extended periods of exposure.

Wear hearing protection when operating this machine.

Use protective equipment for your eyes, ears, hands, feet, and head.

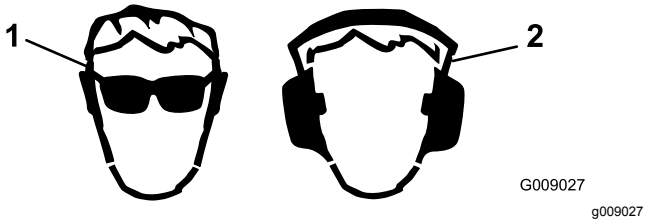

Figure 10

1. Wear eye protection.
2. Wear hearing protection.

Using the Safety-Interlock System

⚠ WARNING

If safety-interlock switches are disconnected or damaged, the machine could operate unexpectedly causing personal injury.

- **Do not tamper with the interlock switches.**
- **Check the operation of the interlock switches daily, and replace any damaged switches before operating the machine.**

Understanding the Safety-Interlock System

The safety-interlock system is designed to prevent the engine from starting unless:

- The parking brake is engaged.
- The blade-control switch (PTO) is disengaged.
- The motion-control levers are in the NEUTRAL-LOCK position.

The safety-interlock system also is designed to shut off the engine when the traction controls are moved from the locked position with the parking brake engaged or if you rise from the seat when the PTO is engaged.

The hour meter has symbols to notify the user when the interlock component is in the correct position. When the component is in the correct position, a triangle lights up in the corresponding square.

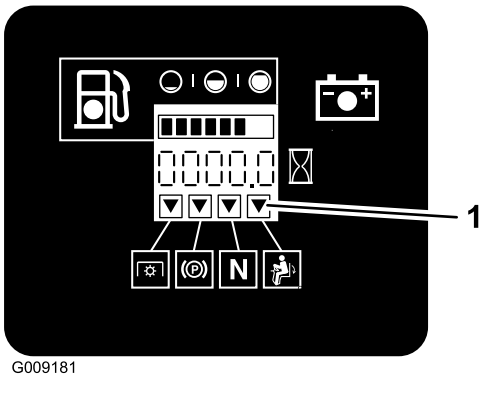

Figure 11

1. Triangles light up when the interlock components are in the correct position

Testing the Safety-Interlock System

Service Interval: Before each use or daily

Test the safety-interlock system before you use the machine each time. If the safety system does not operate as described below, have an Authorized Service Dealer repair the safety system immediately.

1. Sitting on the seat, engage the parking brake and move the blade-control switch (PTO) to the ON position. Try starting the engine; the engine should not start.
2. Sitting on the seat, engage the parking brake and move the blade-control switch (PTO) to the OFF position. Move either motion-control lever (out of the NEUTRAL-LOCK position). Try starting the engine; the engine should not start. Repeat for the other control lever.
3. Sitting on the seat, engage the parking brake, move the blade-control switch (PTO) to the OFF position, and move the motion-control levers to the NEUTRAL-LOCK position. Now start the engine. While the engine is running, disengage the parking brake, engage the blade-control switch (PTO), and rise slightly from the seat; the engine should shut off.
4. Sitting on the seat, engage the parking brake, move the blade-control switch (PTO) to the OFF position, and move the motion-control levers to the NEUTRAL-LOCK position. Now start the engine. While the engine is running, center either motion control and move (forward or reverse); the engine should shut off. Repeat for other motion control.
5. Sitting on the seat, disengage the parking brake, move the blade-control switch (PTO) to the OFF position, and move the motion-control levers to the NEUTRAL-LOCK position. Try starting the engine; the engine should not start.

Positioning the Seat

The seat moves forward and backward. Position the seat where you have the best control of the machine and are most comfortable.

To adjust, move the lever sideways to unlock the seat (Figure 12).

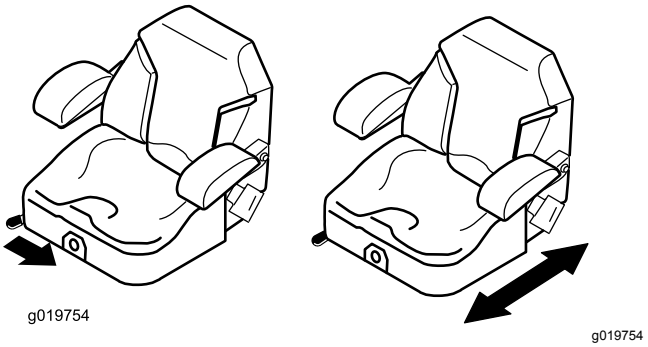

Figure 12

Unlatching the Seat

To unlatch the seat, push the seat latch forward (Figure 13).

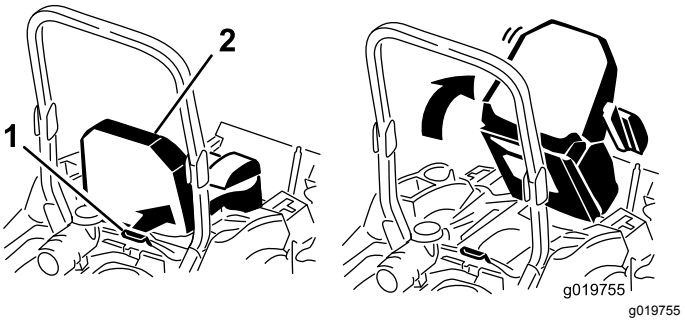

Figure 13

1. Seat latch
2. Seat

Changing the Seat Suspension

The seat adjusts to provide a smooth and comfortable ride. Position the seat where you are most comfortable.

To adjust, turn the knob in front either direction to provide the best comfort (Figure 14).

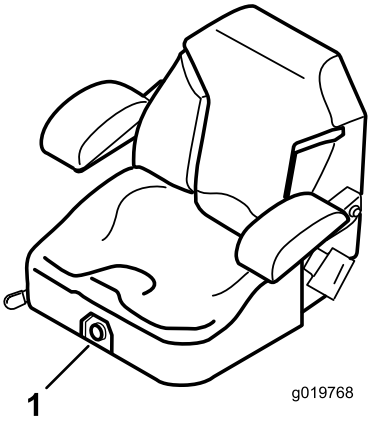

g019768

Figure 14

1. Seat-suspension knob

During Operation

During Operation Safety

General Safety

- The owner/operator can prevent and is responsible for accidents that may cause personal injury or property damage.
- Wear appropriate clothing, including eye protection; slip-resistant, substantial footwear; and hearing protection. Tie back long hair and do not wear jewelry.
- Do not operate the machine while ill, tired, or under the influence of alcohol or drugs.
- Never carry passengers on the machine and keep bystanders and pets away from the machine during operation.
- Operate the machine only in good visibility to avoid holes or hidden hazards.
- Avoid mowing on wet grass. Reduced traction could cause the machine to slide.
- Ensure that all drives are in neutral, the parking brake is engaged, and you are in the operating position before you start the engine.
- Keep your hands and feet away from the cutting units. Keep clear of the discharge opening at all times.
- Look behind and down before backing up to be sure of a clear path.
- Use care when approaching blind corners, shrubs, trees, or other objects that may obscure your vision.
- Do not mow near drop-offs, ditches, or embankments. The machine could suddenly roll over if a wheel goes over the edge or if the edge gives way.
- Stop the blades whenever you are not mowing.
- Stop the machine and inspect the blades after striking an object or if there is an abnormal vibration in the machine. Make all necessary repairs before resuming operation.
- Slow down and use caution when making turns and crossing roads and sidewalks with the machine. Always yield the right-of-way.
- Disengage the drive to the cutting unit and shut off the engine before adjusting the height of cut (unless you can adjust it from the operating position).
- Never run an engine in an area where exhaust gases are enclosed.
- Never leave a running machine unattended.
- Before leaving the operating position (including to empty the catchers or to unclog the chute), do the following:
  - Stop the machine on level ground.
  - Disengage the power take-off and lower the attachments.
  - Engage the parking brake.
  - Shut off the engine and remove the key.
  - Wait for all moving parts to stop.
- Do not operate the machine when there is the risk of lightning.
- Do not use the machine as a towing vehicle.
- Do not change the governor speed or overspeed the engine.
- Use accessories and attachments approved by Toro only.

Rollover Protection System (ROPS) Safety

- **Do not** remove the roll bar from the machine.
- Ensure that the seat belt is attached and that you can release it quickly in an emergency.
- Always wear your seat belt when the roll bar is up.
- Check carefully for overhead obstructions and do not contact them.

- Keep the roll bar in safe operating condition by thoroughly inspecting it periodically for damage and keeping all the mounting fasteners tight.
- Replace a damaged roll bar. Do not repair or alter it.

Slope Safety

- Slow down the machine and use extra care on hillsides. Travel up and down on hillsides. Turf conditions can affect the stability of the machine.
- Avoid turning the machine on slopes. If you must turn the machine, turn it slowly and gradually downhill, if possible.
- Do not turn the machine sharply. Use care when reversing the machine.
- Use extra care while operating the machine with attachments; they can affect the stability of the machine.

Operating the Parking Brake

Always engage the parking brake when you stop the machine or leave it unattended.

Engaging the Parking Brake

⚠ WARNING

The parking brake may not hold the machine parked on a slope and could cause personal injury or property damage.

Do not park on slopes unless the wheels are chocked or blocked.

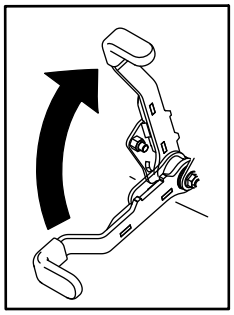

g027334

g027334

Figure 15

Disengaging the Parking Brake

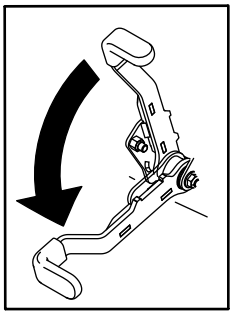

g027335

g027335

Figure 16

Operating the Mower Blade-Control Switch (PTO)

The blade-control switch (PTO) starts and stops the mower blades and any powered attachments.

Engaging the Blade-Control Switch (PTO)

Note: Engaging the blade-control switch (PTO) with the throttle position at half or less causes excessive wear to the drive belts.

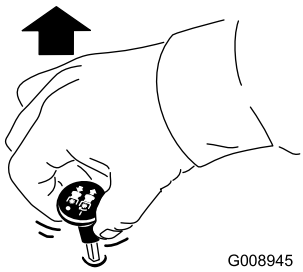

g008945

Figure 17

Disengaging the Blade-Control Switch (PTO)

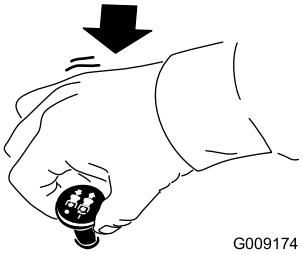

g009174

Figure 18

Operating the Throttle

You can move the throttle control between the FAST and SLOW positions (Figure 19).

Always use the FAST position when turning on the mower deck with the blade-control switch (PTO).

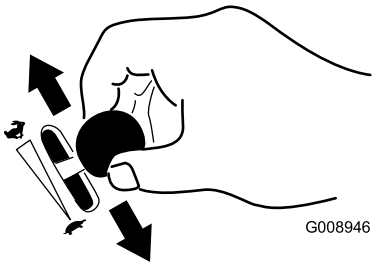

g008946

Figure 19

Operating the Choke

Use the choke to start a cold engine.

1. If the engine is cold, use the choke to start the engine.
2. Pull up on the choke knob to engage the choke before using the ignition switch (Figure 20).
3. Push down on the choke to disengage the choke after the engine has started (Figure 20).

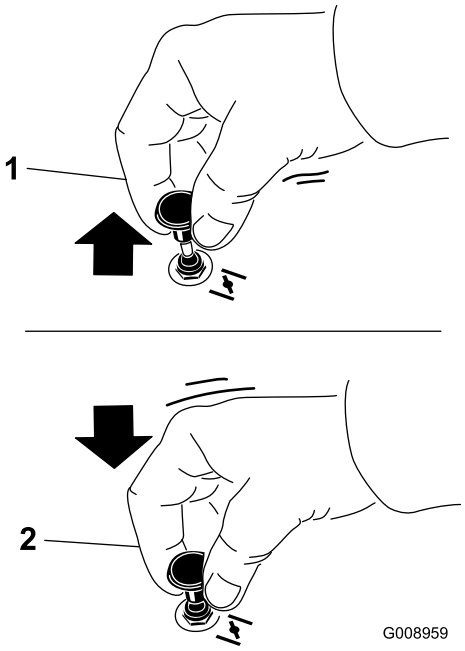

g008959

Figure 20

1. On position
2. Off position

Operating the Ignition Switch

1. Turn the ignition key to the START position (Figure 21).

   Note: When the engines starts, release the key.

   Important: **Do not engage starter for more than 5 seconds at a time. If the engine fails to start allow a 15 second cool-down period between attempts. Failure to follow these instructions can burn out the starter motor.**

   Note: You may need multiple attempts to start the engine when you start it the first time after the fuel system has been without fuel completely.

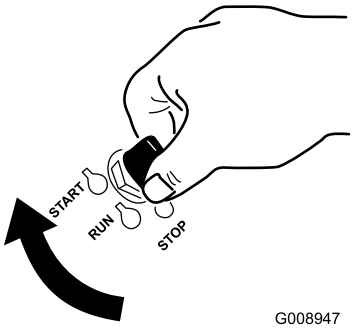

g008947

Figure 21

2. Turn the ignition key to shut off the engine.

Starting and Shutting Off the Engine

Starting the Engine

1. Raise the roll bar up and lock it into place, sit on the seat, and fasten the seat belt.
2. Move the motion controls to the NEUTRAL-LOCK position.
3. Engage the parking brake; refer to Engaging the Parking Brake (page 21).
4. Move the blade-control switch (PTO) to the OFF position (Figure 22).
5. Move the throttle lever midway between the SLOW and FAST positions.

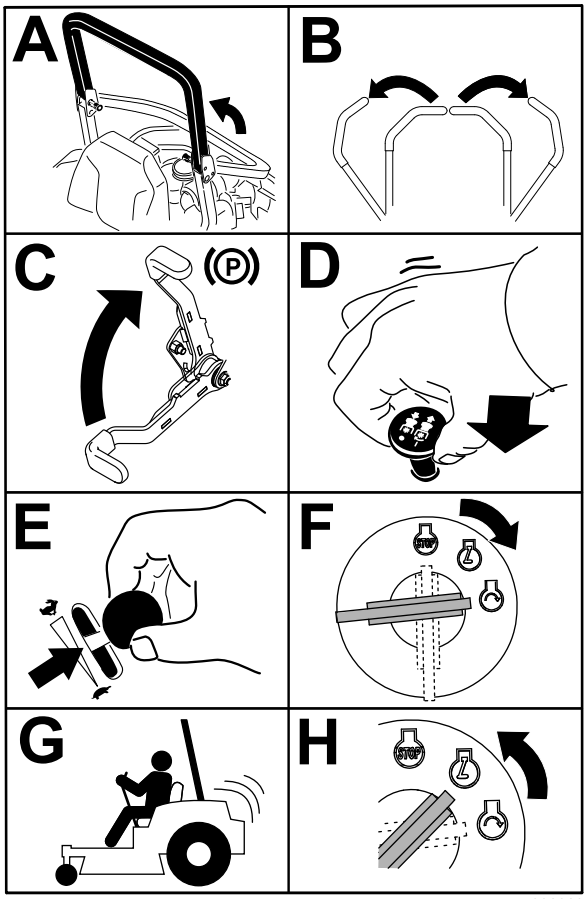

g032328

g032328

Figure 22

6. Turn the ignition key to the START position (Figure 23).

   Note: When the engines starts, release the key.

   Important: **Do not engage starter for more than 5 seconds at a time. If the engine fails to start allow a 15-second cool-down period between attempts. Failure to follow these instructions can burn out the starter motor.**

Note: Additional starting cycles may be required when starting the engine for the first time after the fuel system has been without fuel completely.

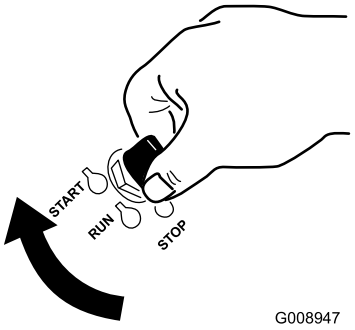

g008947

Figure 23

Shutting Off the Engine

⚠ CAUTION

Children or bystanders may be injured if they move or attempt to operate the machine while it is unattended.

Always remove the ignition key and engage the parking brake when leaving the machine unattended, even if just for a few minutes.

Let the engine idle at slow throttle (turtle) for 60 seconds before turning the ignition switch to the OFF position.

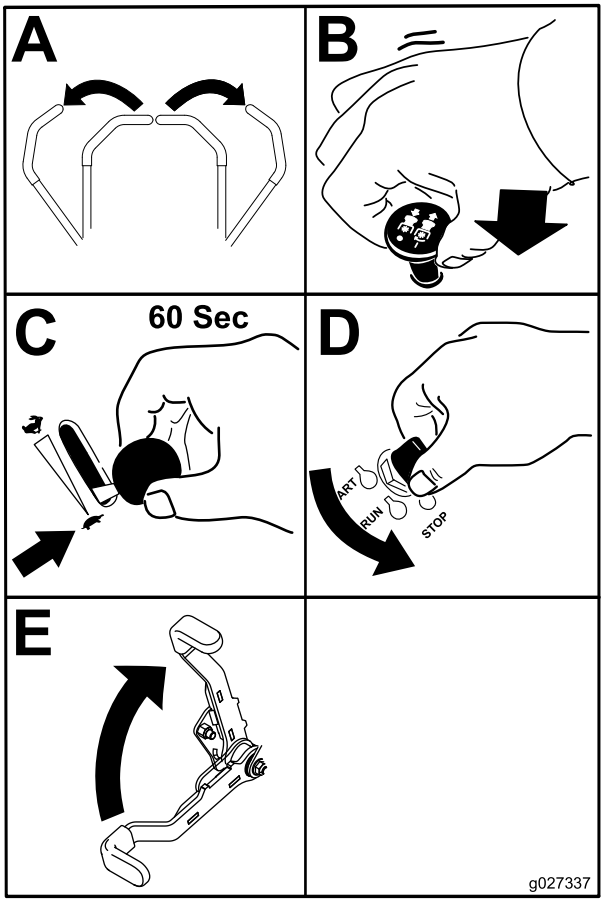

g027337

Figure 24

Important: **Make sure that the fuel-shutoff valve is closed before transporting or storing the machine, as fuel leakage may occur. Engage the parking brake before transporting. Make sure that you remove the key as the fuel pump may run and cause the battery to lose charge.**

Using the Motion-Control Levers

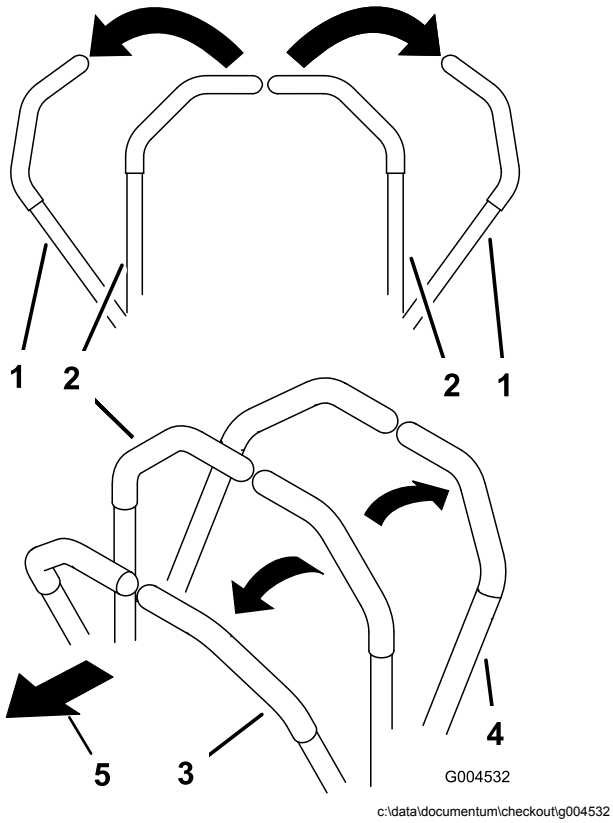

Figure 25

1. Motion-control lever—NEUTRAL-LOCK position
2. Center, unlocked position
3. Forward
4. Backward
5. Front of machine

Driving the Machine

The drive wheels turn independently, powered by hydraulic motors on each axle. You can turn 1 side in reverse while you turn the other forward, causing the machine to spin rather than turn. This greatly improves the machine maneuverability but may require sometime for you to adapt to how it moves.

The throttle control regulates the engine speed as measured in rpm (revolutions per minute). Place the throttle control in the FAST position for best performance. Always operate in the full throttle position when mowing.

⚠ CAUTION

Machine can spin very rapidly. Operator may lose control of machine and cause personal injury or damage to machine.

- **Use caution when making turns.**
- **Slow the machine down before making sharp turns.**

Driving Forward

Note: The engine stops when you move the traction-control with the parking brake engaged.

To stop, pull the motion-control levers to the NEUTRAL position.

1. Disengage the parking brake; refer to Disengaging the Parking Brake (page 21).
2. Move the levers to the center, unlocked position.
3. To go forward, slowly push the motion-control levers forward (Figure 26).

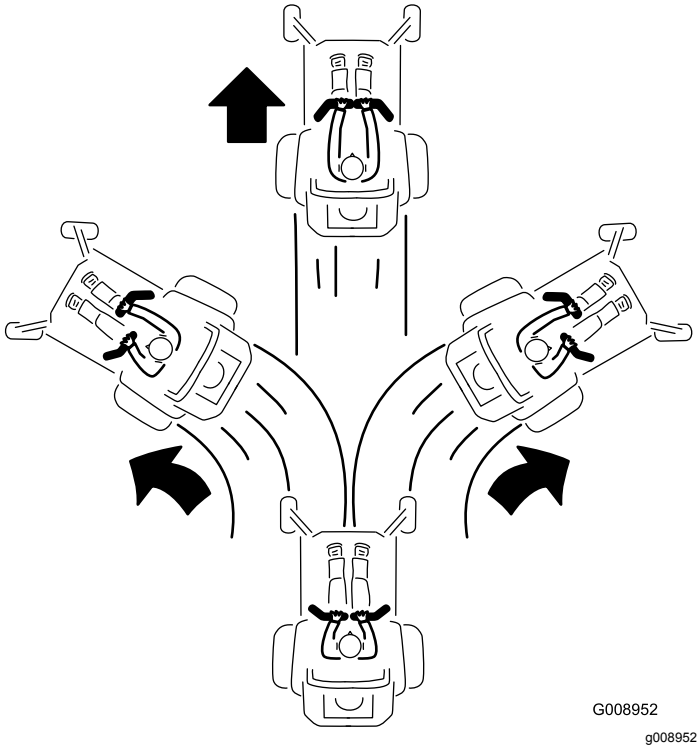

Figure 26

Driving Backward

1. Move the levers to the center, unlocked position.
2. To go backward, slowly pull the motion-control levers rearward (Figure 27).

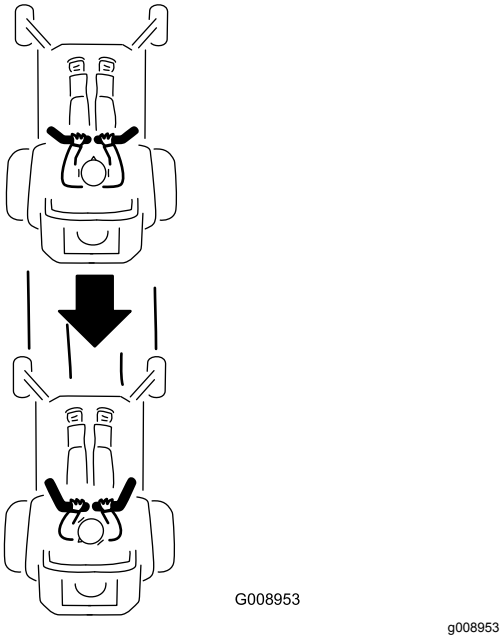

Figure 27

Stopping the Machine

To stop the machine, move the traction-control levers to neutral, and then move them to the locked position, disengage the blade-control switch (PTO), and turn the ignition key to the OFF position.

Engage the parking brake when you leave the machine; refer to Engaging the Parking Brake (page 21). Remember to remove the key from the ignition switch.

⚠ CAUTION

Children or bystanders may be injured if they move or attempt to operate the machine while it is unattended.

Always remove the ignition key and engage the parking brake when leaving the machine unattended, even if just for a few minutes.

Using the Side Discharge

The mower has a hinged grass deflector that disperses clippings to the side and down toward the turf.

⚠ DANGER

Without a grass deflector, discharge cover, or a complete grass-catcher assembly mounted in place, you and others are exposed to blade contact and thrown debris. Contact with rotating mower blade(s) and thrown debris will cause injury or death.

- **Never remove the grass deflector from the mower because the grass deflector routes material down toward the turf. If the grass deflector is ever damaged, replace it immediately.**
- **Never put your hands or feet under the mower.**
- **Never try to clear the discharge area or mower blades unless you move the blade-control switch (PTO) to the OFF position, rotate the ignition key to the OFF position, and remove the key.**
- **Make sure that the grass deflector is in the down position.**

Adjusting the Height of Cut

Using the Transport Lock

The transport lock has 2 positions, and is used with the deck-lift pedal. There is a LOCK position and a UNLOCK position for the transport position (Figure 28).

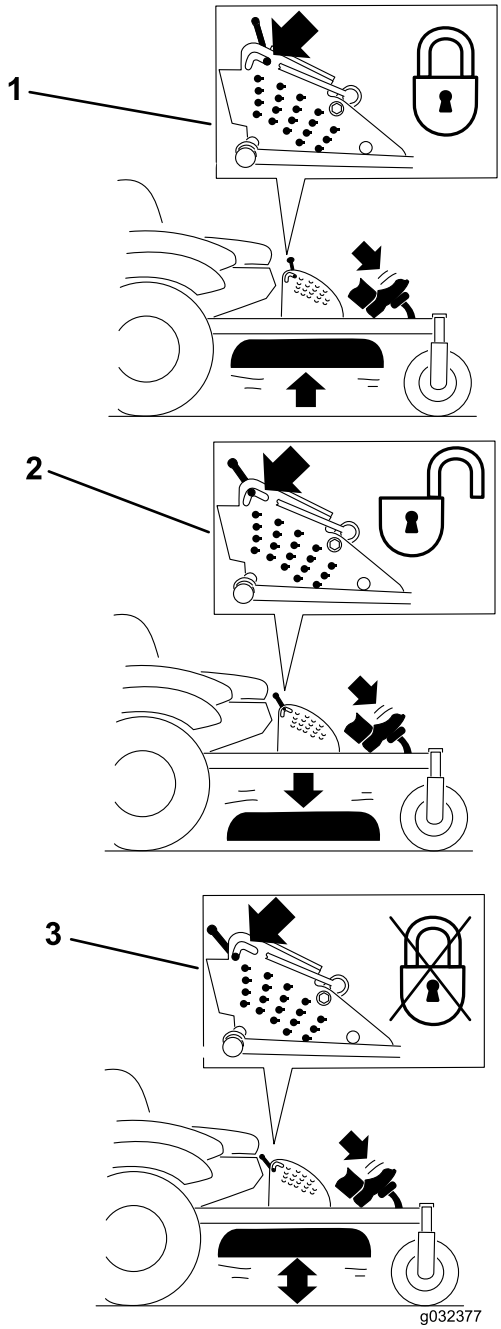

g032377

Figure 28
Transport-Lock Positions

1. Transport lock
2. LOCK position—mower deck locks into transport position
3. UNLOCK position—does not lock the mower deck into transport position

Adjusting the Height-of-Cut Pin

The height-of-cut is adjusted from 25 to 140 mm (1 to 5-1/2 inches) in 6 mm (1/4 inch) increments by relocating the clevis pin into different hole locations.

1. Move the transport lock to the lock position.
2. Push on the deck-lift pedal with your foot, and raise the mower deck to the transport position (also the 140 mm (5-1/2 inches) cutting height position) as shown in Figure 29.
3. To adjust, rotate the pin 90 degrees and remove the pin from the height-of-cut bracket (Figure 29).
4. Select a hole in the height-of-cut bracket corresponding to the height-of-cut desired, and insert the pin (Figure 29).
5. Push on the deck lift, pull back on the transport lock, and slowly lower the mower deck.

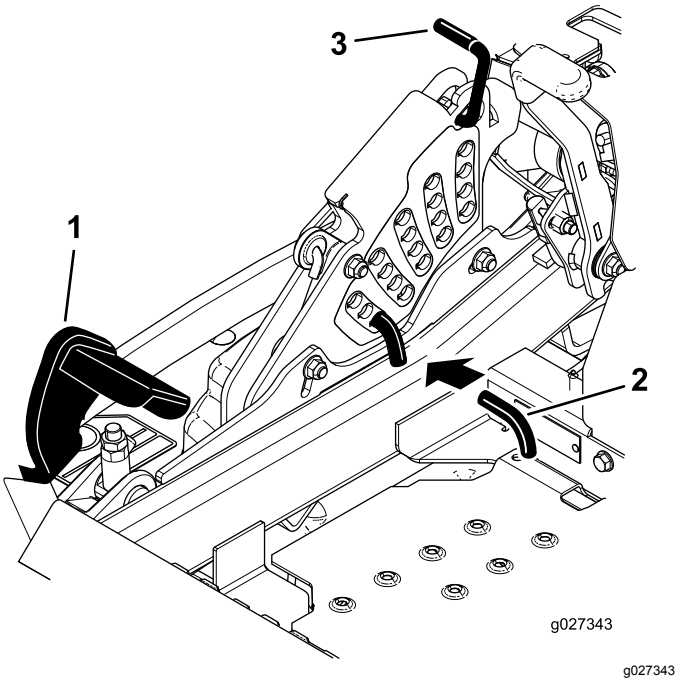

Figure 29

1. Deck-lift pedal
2. Cut-of-height pin
3. Transport lock

Adjusting the Anti-Scalp Rollers

Whenever you change the height-of-cut, it is recommended to adjust the height of the anti-scalp rollers.

1. Disengage the blade-control switch (PTO), move the motion-control levers to the NEUTRAL-LOCK position, and engage the parking brake.
2. Shut off the engine, remove the key, and wait for all moving parts to stop before leaving the operating position.
3. Adjust the anti-scalp rollers as shown in Figure 30, Figure 31, and Figure 32.

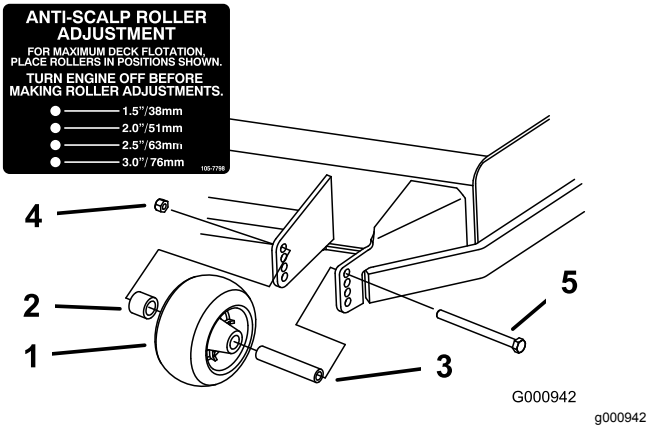

Figure 30

1. Anti-scalp roller
2. Spacer
3. Bushing
4. Flange nut
5. Bolt

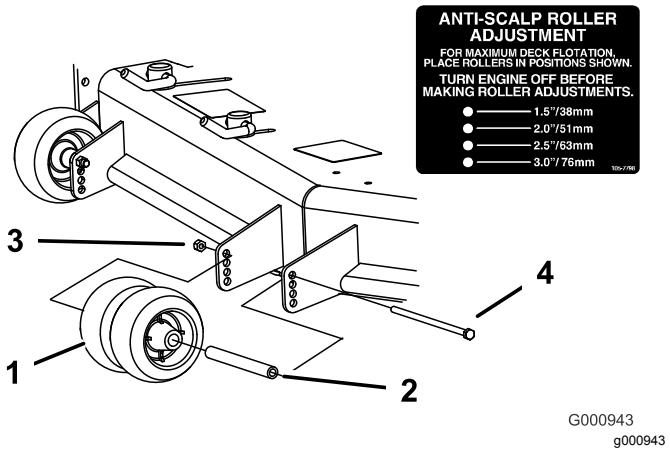

Figure 31

1. Anti-scalp roller
2. Bushing
3. Flange nut
4. Bolt

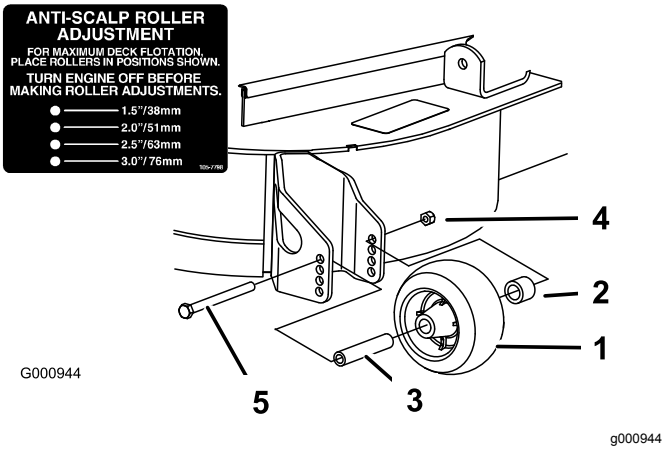

Figure 32

1. Anti-scalp roller
2. Spacer
3. Bushing
4. Flange nut
5. Bolt

Adjusting the Flow Baffle Cam Locks

This procedure is applicable only to machines with the flow-baffle locks. Certain models have nuts and bolts in place of the flow-baffle locks and can be adjusted the same.

You can adjust the mower-discharge flow for different types of mowing conditions. Position the cam locks and baffle to give the best quality of cut.

1. Disengage the blade-control switch (PTO), move the motion-control levers to the NEUTRAL-LOCK position, and engage the parking brake.
2. Shut off the engine, remove the key, and wait for all moving parts to stop before leaving the operating position.
3. To adjust the cam locks, swing the lever up to loosen the cam lock (Figure 33).
4. Adjust the baffle and cam locks in the slots to the desired discharge flow.
5. Swing the lever back over to tighten the baffle and cam locks (Figure 33).
6. If the cam locks do not lock the baffle into place or it is too tight, loosen the lever and then rotate the cam lock.

   Note: Adjust the cam lock until the desired locking pressure is achieved.

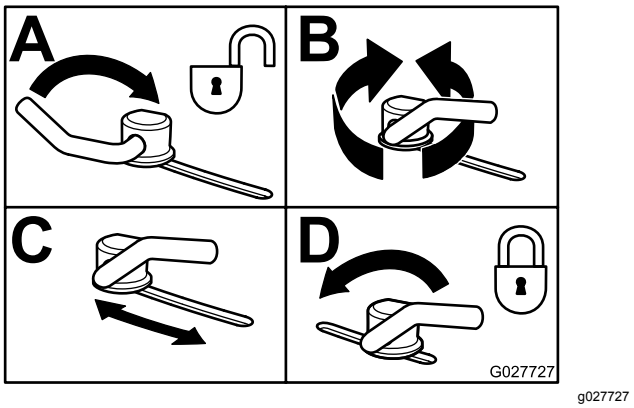

Figure 33

Positioning the Flow Baffle

The following figures are only recommendations for use. Adjustments vary by grass type, moisture content, and the height of the grass.

Note: If the engine power draws down and the mower ground speed is the same, open up the baffle.

Position A

This is the full rear position. The suggested use for this position is as follows:

- Short, light grass mowing conditions
- Dry conditions
- Smaller grass clippings
- Propels grass clippings farther away from the mower

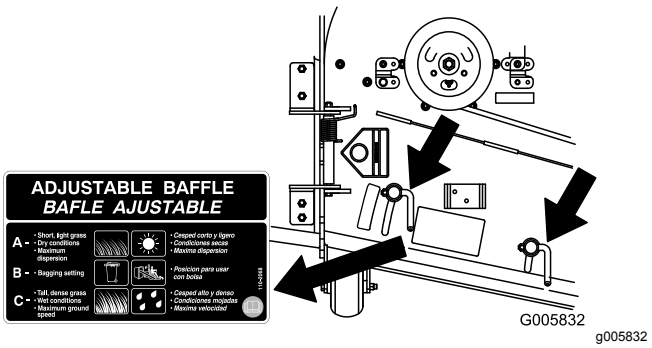

Figure 34

Position B

Use this position when bagging. Always align it with the blower opening.

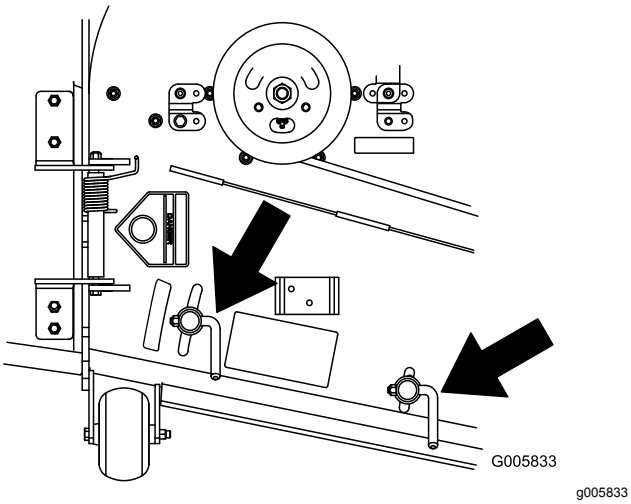

Figure 35

Position C

This is the full open position. The suggested use for this position is as follows:

- Tall, dense grass mowing conditions
- Wet conditions
- Lowers the engine-power consumption
- Allows increased ground speed in heavy conditions

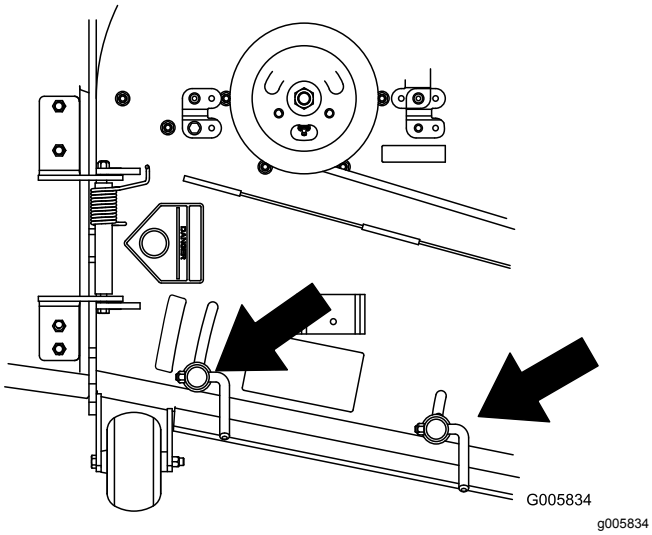

Figure 36

Operating Tips

Using the Fast Throttle Setting

For best mowing and maximum air circulation, operate the engine at the FAST position. Air is required to thoroughly cut grass clippings, so do not set the height-of-cut so low as to totally surround the mower in uncut grass. Always try to have 1 side of the mower free from uncut grass, which allows air to be drawn into the mower.

Cutting a Lawn for the First Time

Cut grass slightly longer than normal to ensure that the cutting height of the mower does not scalp any uneven ground. However, the cutting height used in the past is generally the best one to use. When cutting grass longer than 15 cm (6 inches) tall, you may want to cut the lawn twice to ensure an acceptable quality of cut.

Cutting a Third of the Grass Blade

It is best to cut only about a third of the grass blade. Cutting more than that is not recommended unless grass is sparse, or it is late fall when grass grows more slowly.

Alternating the Mowing Direction

Alternate the mowing direction to keep the grass standing straight. This also helps disperse clippings which enhances decomposition and fertilization.

Mowing at Correct Intervals

Grass grows at different rates at different times of the year. To maintain the same cutting height, mow more often in early spring. As the grass growth rate slows in mid summer, mow less frequently. If you cannot mow for an extended period, first mow at a high cutting height, then mow again 2 days later at a lower height setting.

Using a Slower Cutting Speed

To improve cut quality, use a slower ground speed in certain conditions.

Avoiding Cutting Too Low

When mowing uneven turf, raise the cutting height to avoid scalping the turf.

Stopping the Machine

If you must stop the forward motion of the machine while mowing, a clump of grass clippings may drop onto your lawn. To avoid this, move onto a previously cut area with the blades engaged or you can disengage the mower deck while moving forward.

Keeping the Underside of the Mower Clean

Clean clippings and dirt from the underside of the mower after each use. If grass and dirt build up inside the mower, cutting quality will eventually become unsatisfactory.

Maintaining the Blade(s)

Maintain a sharp blade throughout the cutting season because a sharp blade cuts cleanly without tearing or shredding the grass blades. Tearing and shredding turns grass brown at the edges, which slows growth and increases the chance of disease. Check the mower blades after each use for sharpness, and for any wear or damage. File down any nicks and sharpen the blades as necessary. If a blade is damaged or worn, replace it immediately with a genuine Toro replacement blade.

After Operation

After Operation Safety

General Safety

- Clean grass and debris from the cutting units, mufflers, and engine compartment to help prevent fires. Clean up oil or fuel spills.
- Shut off the fuel before storing or transporting the machine.
- Disengage the drive to the attachment whenever you are transporting or not using the machine.
- Use full-width ramps for loading the machine into a trailer or truck.
- Tie the machine down securely using straps, chains, cable, or ropes. Both front and rear straps should be directed down and outward from the machine.
- Allow the engine to cool before storing the machine in any enclosure.
- Never store the machine or fuel container where there is an open flame, spark, or pilot light, such as on a water heater or on other appliances.

Using the Fuel-Shutoff Valve

The fuel-shutoff valve is located under the seat. Move the seat forward to access it.

Close the fuel-shutoff valve for transport, maintenance, and storage.

Ensure that the fuel-shutoff valve is open when starting the engine.

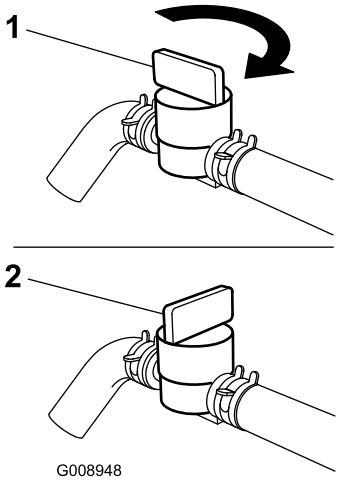

g008948

Figure 37

1. On position
2. Off position

Using the Drive-Wheel-Release Valves

⚠ WARNING

Hands may become entangled in the rotating drive components below the engine deck, which could result in serious injury.

Shut off the engine, remove the key, and allow all moving parts to stop before accessing the drive-wheel-release valves.

⚠ WARNING

The engine and hydraulic-drive units can become very hot. Touching a hot engine or hydraulic-drive units can cause severe burns.

Allow the engine and hydraulic-drive units to cool completely before accessing the drive-wheel-release valves.

The drive-wheel-release valves are located in the back of each hydraulic-drive unit, under the seat.

Note: Make sure that the release valves are in the fully horizontal position when operating the machine or severe damage to the hydraulic system can occur.

1. Disengage the blade-control switch (PTO), turn the ignition key to the OFF position, move the levers to the NEUTRAL-LOCK position, engage the parking brake, and remove the key.
2. Rotate the release-valve levers vertically to push the machine (Figure 38).

   Note: This allows hydraulic fluid to bypass the pump enabling the wheels to turn.
3. Disengage the parking brake before pushing the machine.

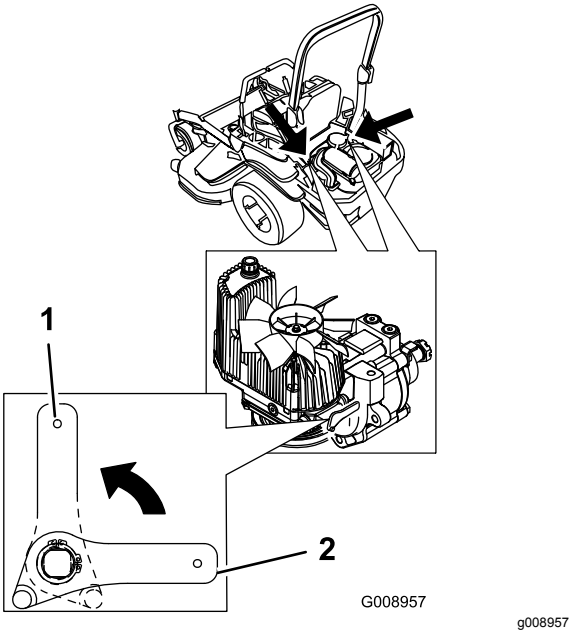

Figure 38

1. Vertical to push the machine
2. Horizontal to run the machine

4. Rotate the release-valve levers horizontally to run the machine (Figure 38).

Transporting the Machine

Use a heavy-duty trailer or truck to transport the machine. Ensure that the trailer or truck has all the necessary brakes, lighting, and marking as required by law. Please carefully read all the safety instructions. Knowing this information could help you, your family, pets, or bystanders avoid injury.

⚠ WARNING

Driving on the street or roadway without turn signals, lights, reflective markings, or a slow-moving-vehicle emblem is dangerous and can lead to accidents causing personal injury.

Do not drive the machine on a public street or roadway.

1. If you are using a trailer, connect it to the towing vehicle, and connect the safety chains.
2. If applicable, connect the trailer brakes.
3. Load the machine onto the trailer or truck.
4. Shut off the engine, remove the key, engage the parking brake, and close the fuel valve.
5. Use the tie-down loops on the machine to securely fasten it to the trailer or truck with straps, chains, cable, or ropes (Figure 39).

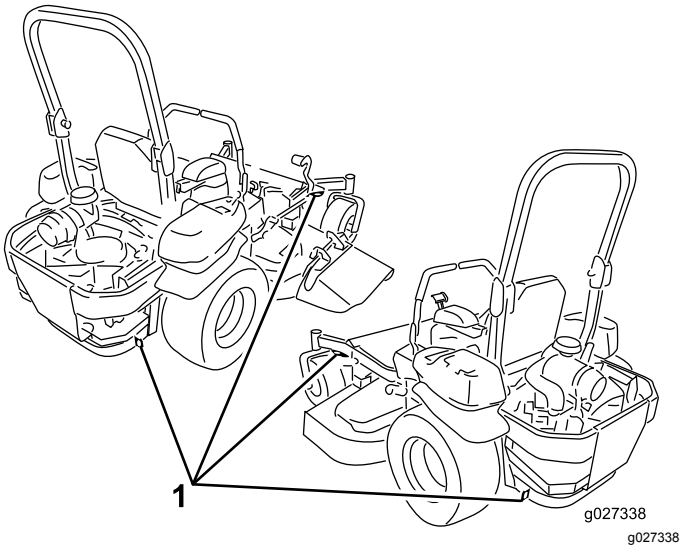

Figure 39

1. Traction unit tie-down loops

Loading the Machine

Use extreme caution when loading or unloading machines onto a trailer or a truck. Use a full-width ramp that is wider than the machine for this procedure. Back up the ramp and drive forward down the ramp (Figure 40).

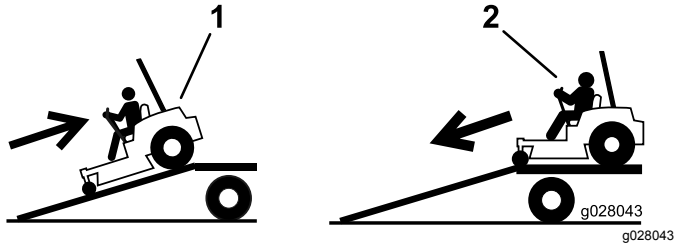

Figure 40

1. Back the machine up the ramp.
2. Drive the machine forward down the ramp.

Important: **Do not use narrow individual ramps for each side of the machine.**

⚠ WARNING

Loading a machine onto a trailer or truck increases the possibility of tip-over and could cause serious injury or death.

- **Use extreme caution when operating a machine on a ramp.**
- **Ensure that the roll bar is in the up position and use the seat belt when loading or unloading the machine. Ensure that the roll bar will clear the top of an enclosed trailer.**
- **Use only a full-width ramp; do not use individual ramps for each side of the machine.**
- **Do not exceed a 15-degree angle between the ramp and the ground or between the ramp and the trailer or truck.**
- **Ensure that the length of ramp is at least 4 times as long as the height of the trailer or truck bed to the ground. This ensures that the ramp angle does not exceed 15 degrees on flat ground.**
- **Back up ramps and drive forward down ramps.**
- **Avoid sudden acceleration or deceleration while driving the machine on a ramp as this could cause a loss of control or a tip-over situation.**

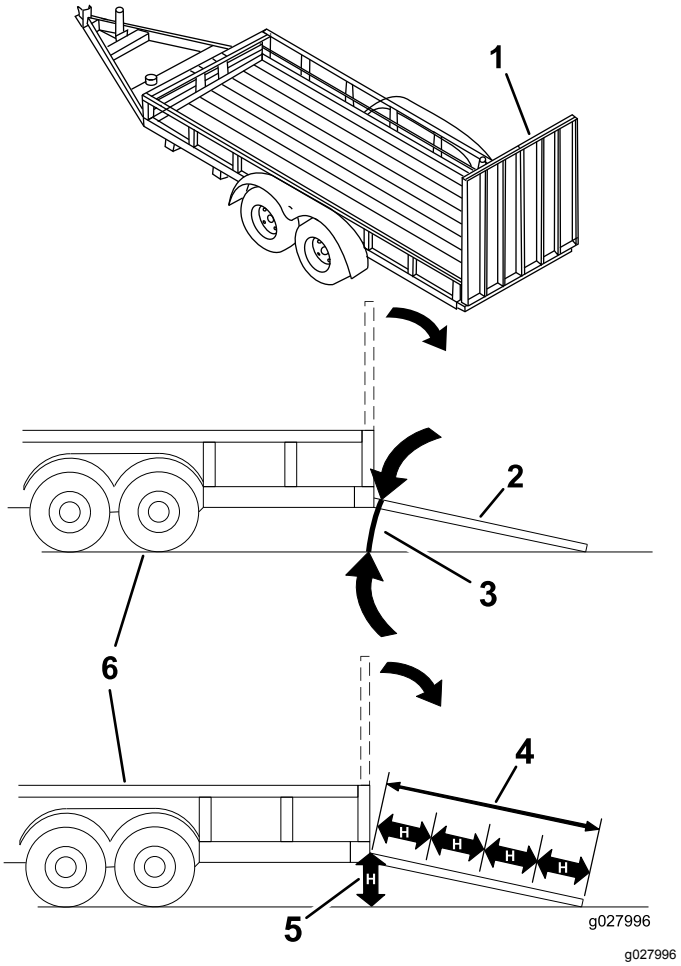

Figure 41

1. Full-width ramp in stowed position
2. Side view of full-width ramp in loading position
3. Not greater than 15 degrees
4. Ramp is at least 4 times as long as the height of the trailer or truck bed to the ground
5. H=height of the trailer or truck bed to the ground
6. Trailer

Using the Z Stand™

The Z Stand raises the front end of the machine to allow you to clean the mower and remove the blades.

⚠ WARNING

The machine could fall onto someone and cause serious injury or death.

- **Use extreme caution when operating the machine on the Z Stand.**
- **Use the Z Stand only for cleaning the mower and removing the blades.**
- **Do not keep the machine on the Z Stand for extended periods of time.**
- **Always shut off the engine, set the parking brake, and remove the key before performing any maintenance to the mower.**

Driving up onto the Z Stand

Important: **Use the Z Stand on a level surface.**

1. Raise the mower deck to the transport position.
2. Remove the bracket pin (Figure 42).

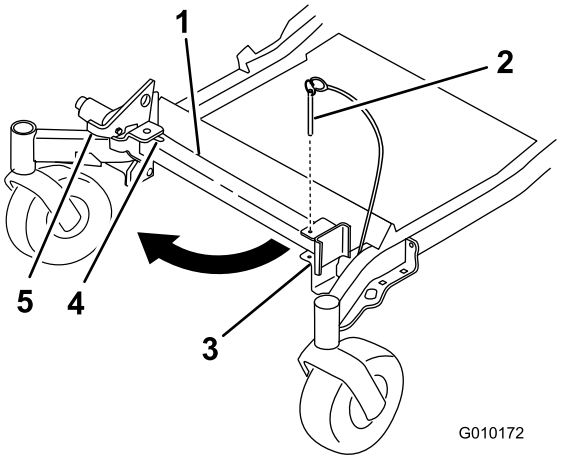

g010172

Figure 42

1. Z Stand
2. Bracket pin
3. Bracket
4. Bottom of slot
5. Latch

3. Raise the latch.
4. Swing the stand foot out front and slide it toward machine, into the bottom of slot (Figure 42 and Figure 43).

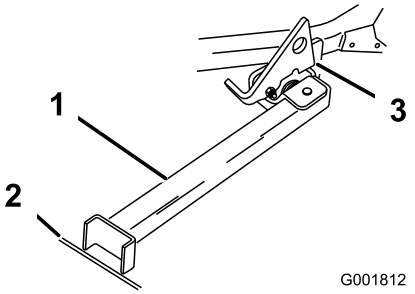

g001812

Figure 43

1. Z Stand (positioned in slot)
2. Crack in side walk or turf
3. Latch resting on pivot tab

5. Set the foot of the stand on the ground and rest the latch on the pivot tab (Figure 43).
6. Start the engine and put it at half throttle.

   Note: For best results, place the foot of the stand into the seams in sidewalks or into the turf (Figure 43).
7. Drive the machine onto the stand. Stop when the latch drops over the tab into the locked position (Figure 43).
8. Engage the parking brake and turn off the engine.
9. Chock or block the drive wheels.

   ⚠ WARNING

   The parking brake may not hold the machine parked on the Z Stand and could cause personal injury or property damage.

   Do not park on the Z Stand unless the wheels are chocked or blocked.
10. Perform the maintenance.

Driving off the Z Stand

1. Remove the chocks or blocks.
2. Raise the latch to the unlocked position (Figure 44).

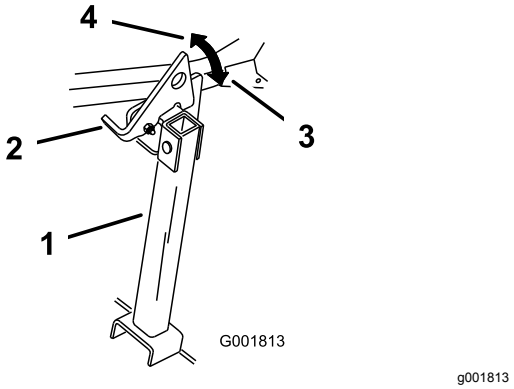

Figure 44

1. Z Stand
2. Latch
3. Locked position
4. Unlocked position

3. Start the engine and place it at half throttle. Disengage the parking brake.
4. Slowly drive backward off the stand.
5. Return the stand to its rest position (Figure 42).

Maintenance

Determine the left and right sides of the machine from the normal operating position.

Recommended Maintenance Schedule(s)

Maintenance Service Interval	Maintenance Procedure
After the first 8 hours	• Change the engine oil.
After the first 100 hours	• Check the wheel lug-nut torque. • Check the wheel-hub slotted-nut torque. • Check the parking brake adjustment.
After the first 250 hours	• Change the hydraulic filters and hydraulic fluid when using any type of fluid.
Before each use or daily	• Check the safety system. • Check the engine-oil level. • Check the seat belt. • Check the rollover protection system (ROPS) knobs. • Clean the engine screen and the oil cooler. • Check and clean the hydraulic unit shrouds. • Inspect the blades. • Clean the mower deck.
Every 50 hours	• Check the spark arrester (if equipped). • Check the tire pressure. • Inspect the belts for cracks and wear. • Check the hydraulic-fluid level.
Every 100 hours	• Lubricate the mower-deck-lift pivots. • Change the engine oil (more often in dirty or dusty conditions). • Check, clean, and regap the spark plug. • Check and clean engine-cooling fins and shrouds.
Every 200 hours	• Change the engine-oil filter.
Every 250 hours	• Replace the primary air filter. • Check the secondary air filter. • Change the hydraulic filters and hydraulic fluid when using Mobil® 1 fluid (more often in dirty or dusty conditions).
Every 500 hours	• Replace the secondary air filter. • Replace the fuel filter (more often in dirty or dusty conditions). • Check the wheel lug-nut torque. • Check the wheel-hub slotted-nut torque. • Adjust the caster-pivot bearing. • Check the parking brake adjustment. • Change the hydraulic filters and hydraulic fluid when using Toro® HYPR-OIL™ 500 hydraulic fluid (more often in dirty or dusty conditions).
Monthly	• Check the battery charge.
Yearly	• Grease the pump-belt idler arm. • Grease the front caster pivots (more often in dirty or dusty conditions). • Repack the front caster-wheel bearings (more often in dirty or dusty conditions). • Lubricate the caster-wheel hubs.
Yearly or before storage	• Paint chipped surfaces. • Check all maintenance procedures listed above before storage.

Important: **Refer to your engine operator's manual for additional maintenance procedures.**

⚠ CAUTION

If you leave the key in the ignition switch, someone could accidently start the engine and seriously injure you or other bystanders.

Remove the key from the ignition before you perform any maintenance.

Pre-Maintenance Procedures

Maintenance and Storage Safety

- Before repairing the machine do the following:
  - Disengage the drives.
  - Engage the parking brake.
  - Shut off the engine and remove the key.
  - Disconnect the spark-plug wire.
- Park the machine on a level surface.
- Clean grass and debris from the cutting unit, drives, mufflers, and engine to help prevent fires.
- Clean up oil or fuel spills.
- Let the engine cool before storing the machine.
- Do not store the machine or fuel near flames or drain the fuel indoors.
- Do not allow untrained personnel to service the machine.
- Use jack stands to support the machine and/or components when required.
- Carefully release pressure from components with stored energy.
- Disconnect the battery or remove the spark-plug wire before making any repairs. Disconnect the negative terminal first and the positive terminal last. Connect the positive terminal first and negative last.
- Use care when checking the blades. Wrap the blade(s) or wear thickly padded gloves, and use caution when servicing them. Only replace blades; do not straighten or weld them.
- Keep your hands and feet away from moving parts. If possible, do not make adjustments with the engine running.
- Keep all parts in good working condition and all hardware tightened, especially the blade-attachment bolts. Replace all worn or damaged decals.
- Never interfere with the intended function of a safety device or reduce the protection provided by a safety device. Check their proper operation regularly.
- To ensure optimum performance and continued safety certification of the machine, use only genuine Toro replacement parts and accessories. Replacement parts and accessories made by other manufacturers could be dangerous, and such use could void the product warranty.
- Check the parking brake operation frequently. Adjust and service as required.

Releasing the Mower-Deck Curtain

Loosen the bottom bolt of the curtain to release the mower-deck curtain and get access to the top of the mower deck (Figure 45). After performing maintenance, install the curtain and tighten the bolt.

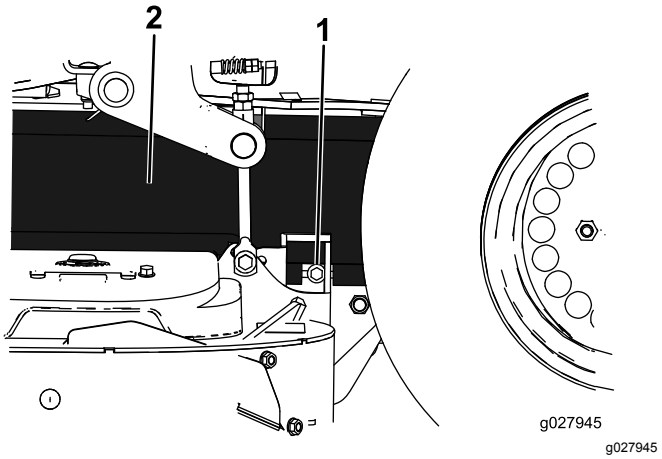

Figure 45

1. Bolt
2. Curtain

Removing the Sheet-Metal Guard

Loosen the 2 front bolts and remove the sheet-metal guard to access the mower belts and spindles (Figure 46). After performing maintenance, install the sheet-metal guard and tighten the bolts.

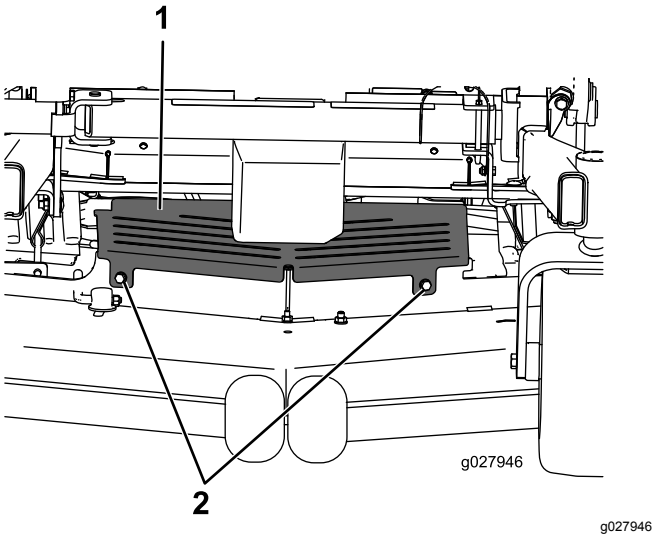

Figure 46

1. Sheet-metal guard
2. Bolt

Lubrication

Grease more frequently when operating conditions are extremely dusty or sandy.

Grease Type: No. 2 general-purpose lithium-based or molybdenum-based grease

1. Disengage the blade-control switch (PTO), move the motion-control levers to the NEUTRAL-LOCK position, and engage the parking brake.
2. Shut off the engine, remove the key, and wait for all moving parts to stop before leaving the operating position.
3. Clean the grease fittings with a rag.

   Note: Make sure that you scrape any paint off the front of the fitting(s).
4. Connect a grease gun to the fitting.
5. Pump grease into the fittings until grease begins to ooze out of the bearings.
6. Wipe up any excess grease.

Adding Light Oil or Spray Lubrication

Service Interval: Every 100 hours

Lubricate the deck-lift pivots.

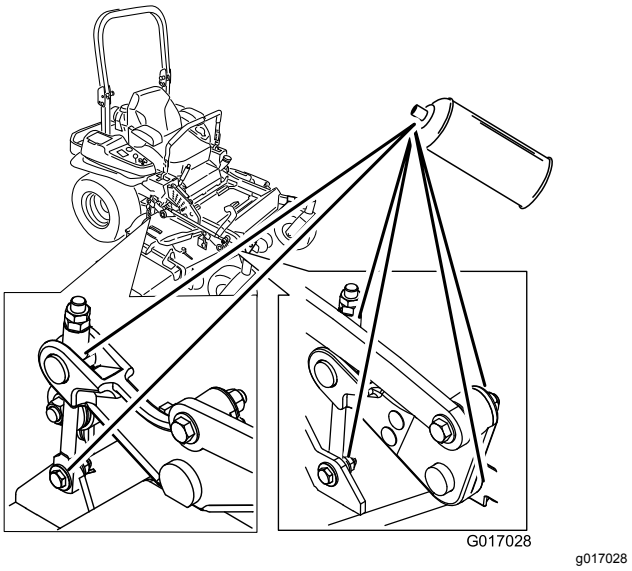

Figure 47

Greasing the Mower

Service Interval: Yearly—Grease the pump-belt idler arm.

Yearly—Grease the front caster pivots (more often in dirty or dusty conditions).

Yearly—Repack the front caster-wheel bearings (more often in dirty or dusty conditions).

1. Disengage the blade-control switch (PTO), move the motion-control levers to the NEUTRAL-LOCK position, and engage the parking brake.
2. Shut off the engine, remove the key, and wait for all moving parts to stop before leaving the operating position.
3. Loosen the bottom bolt holding the mower-deck curtain to the mower deck. Refer to Releasing the Mower-Deck Curtain (page 38).
4. Remove the sheet-metal guard. Refer to Removing the Sheet-Metal Guard (page 39).
5. Grease the mower deck idler-pulley pivot until grease comes out the bottom (Figure 48).

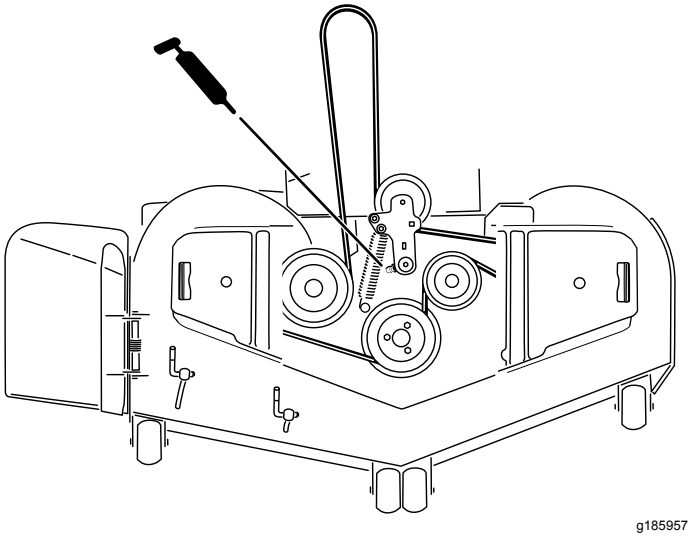

Figure 48

6. Grease the drive-belt idler arm (Figure 48).

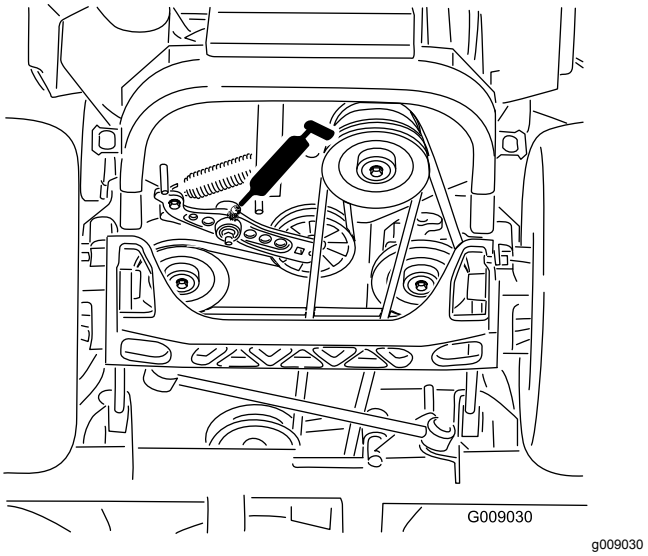

Figure 49

7. Remove the dust cap and adjust the caster pivots.

   Note: Keep the dust cap off until greasing is done.
8. Remove the hex plug.
9. Thread a grease fitting into the hole.
10. Pump grease into the fitting until it oozes out around the top bearing.
11. Remove the grease fitting in the hole.
12. Install the hex plug and dust cap (Figure 50).

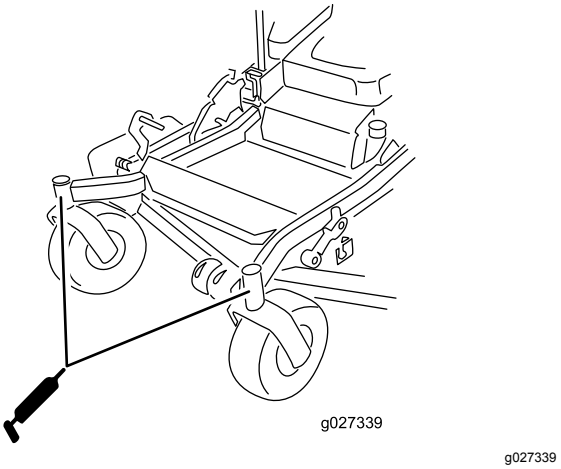

Figure 50

13. Grease the caster-wheel bearings (Figure 50).
14. Install the sheet-metal guard. Refer to Removing the Sheet-Metal Guard (page 39).
15. Tighten the bolt for the mower-deck curtain. Refer to Releasing the Mower-Deck Curtain (page 38).

Lubricating the Caster-Wheel Hubs

Service Interval: Yearly

1. Shut off the engine, wait for all moving parts to stop, remove the key, and engage the parking brake.

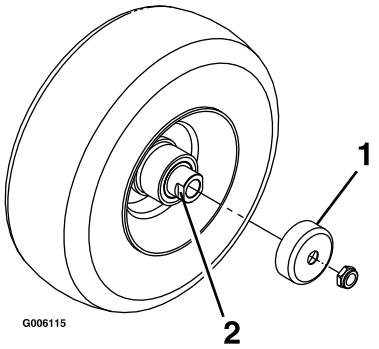

g006115

Figure 51

1. Seal guard
2. Spacer nut with wrench flats

2. Raise the mower for access.
3. Remove the caster wheel from the caster forks.
4. Remove the seal guards from the wheel hub.
5. Remove a spacer nut from the axle assembly in the caster wheel.

   Note: Thread-locking adhesive has been applied to lock the spacer nuts to the axle.

6. Remove the axle (with the other spacer nut still assembled to it) from the wheel assembly.
7. Pry out seals and inspect bearings for wear or damage and replace if necessary.
8. Pack the bearings with a general-purpose grease.
9. Insert 1 bearing and 1 new seal into the wheel.

   Note: Replace the seals.

10. If the axle assembly is missing both spacer nuts, apply a thread-locking adhesive to 1 spacer nut and thread it onto the axle with the wrench flats facing outward.

    Note: Do not thread the spacer nut all of the way onto the end of the axle. Leave approximately 3 mm (1/8 inch) from the outer surface of the spacer nut to the end of the axle inside the nut.

11. Insert the assembled nut and axle into the wheel on the side of the wheel with the new seal and bearing.
12. With the open end of the wheel facing up, fill the area inside the wheel around the axle full of general-purpose grease.
13. Insert the second bearing and new seal into the wheel.
14. Apply a thread-locking adhesive to the second spacer nut, and thread it onto the axle with the wrench flats facing outward.
15. Torque the nut to 8 to 9 N·m (75 to 80 in-lb), loosen, then torque to 2 to 3 N·m (20 to 25 in-lb).

    Note: Make sure that the axle does not extend beyond either nut.

16. Install the seal guards over the wheel hub, and insert the wheel into the caster fork.
17. Install the caster bolt and tighten the nut fully.

Important: **To prevent seal and bearing damage, check the bearing adjustment often. Spin the caster tire. The tire should not spin freely (more than 1 or 2 revolutions) or have any side play. If the wheel spins freely, adjust the torque on the spacer nut until there is a slight amount of drag. Apply another layer of thread-locking adhesive.**

Engine Maintenance

⚠ WARNING

Contact with hot surfaces may cause personal injury.

Keep your hands, feet, face, clothing, and other body parts away the muffler and other hot surfaces.

Engine Safety

Shut off the engine before checking the oil or adding oil to the crankcase.

Servicing the Air Cleaner

Service Interval: Every 250 hours—Replace the primary air filter.

Every 250 hours—Check the secondary air filter.

Every 500 hours—Replace the secondary air filter.

Note: Service the air cleaner more frequently if operating conditions are extremely dusty or sandy.

Removing the Filters

1. Disengage the blade-control switch (PTO), move the motion-control levers to the NEUTRAL-LOCK position, and engage the parking brake.
2. Shut off the engine, remove the key, and wait for all moving parts to stop before leaving the operating position.
3. Push down to release the retaining clamps on the air cleaner, and pull the air-cleaner cover off the air-cleaner body (Figure 52).
4. Clean the inside of the air-cleaner cover with compressed air.
5. Gently slide the primary filter out of the air-cleaner body (Figure 52). Avoid knocking the filter into the side of the body.
6. Remove the secondary filter only if you intend to replace it.

   Important: **Never attempt to clean the secondary filter. If the secondary filter is dirty, then the primary filter is damaged and you should replace both filters.**
7. Inspect the primary filter for damage by looking into the filter while shining a bright light on the outside of the filter.

   Note: Holes in the filter appear as bright spots.

   Note: If the filter is damaged discard it.

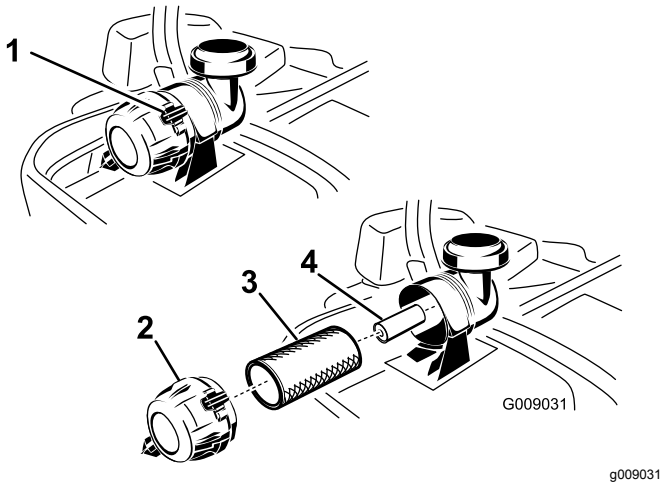

Figure 52

1. Air-cleaner clamps
2. Air-cleaner cover
3. Primary air filter
4. Secondary air filter

Servicing the Primary Filter

1. Do not clean the paper filter, replace it (Figure 52).
2. Inspect the element for tears, an oily film, or damage to the rubber seal.
3. Replace the paper element if it is damaged.

Servicing the Secondary Filter

Do not clean the secondary filter, replace it.

Important: **Do not attempt to clean the secondary filter. If the secondary filter is dirty, then the primary filter is damaged and you should replace both filters.**

Installing the Filters

Important: **To prevent engine damage, always operate the engine with both air filters and the cover installed.**

1. If installing new filters, check each filter for shipping damage.

   Note: Do not use a damaged filter.
2. If the secondary filter is being replaced, carefully slide it into the filter body (Figure 52).
3. Carefully slide the primary filter over the secondary filter (Figure 52).
4. Ensure that it is fully seated by pushing on the outer rim of the filter while installing it.

   Important: **Do not press on the soft inside area of the filter.**

5. Install the air-cleaner cover with the breather cap down, and rotate so that the retaining clamps lock the cover in place (Figure 52).

Servicing the Engine Oil

Oil Type: Detergent oil (API service SG, SH, SJ, or higher)

Oil Capacity:

- **Model 74919TE:** with a filter change, 2.1 L (71 oz); with no filter change, 1.8 L (61 oz)
- **Model 74925TE:** with a filter change, 2.3 L (77 oz); with no filter change, 2.1 L (70 oz)

Viscosity: See the table below.

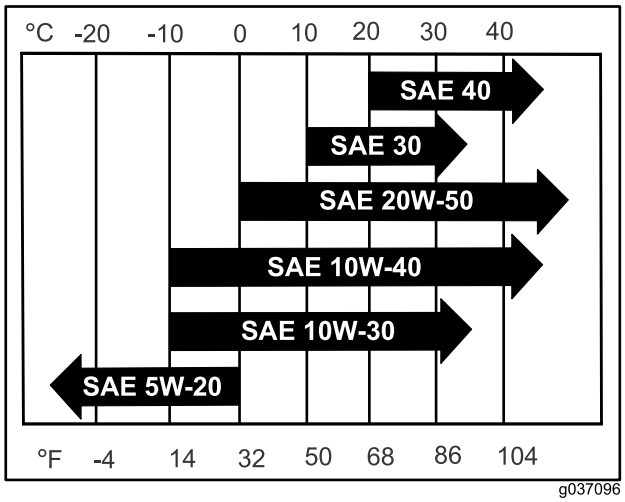

g037096

Figure 53

Note: Use of multi-grade oils (5W-20, 10W-30, or 10W-40) increase oil consumption. Check the oil level more frequently when using them.

Checking the Engine-Oil Level

Service Interval: Before each use or daily

Note: Check the oil when the engine is cold.

⚠ WARNING

Contact with hot surfaces may cause personal injury.

Keep your hands, feet, face, clothing, and other body parts away from the muffler and other hot surfaces.

Important: **Do not overfill the crankcase with oil because damage to the engine may result. Do not run engine with oil below the Low mark because the engine may be damaged.**

1. Disengage the blade-control switch (PTO), move the motion-control levers to the NEUTRAL-LOCK position, and engage the parking brake.

2. Shut off the engine, remove the key, and wait for all moving parts to stop before leaving the operating position (Figure 54).

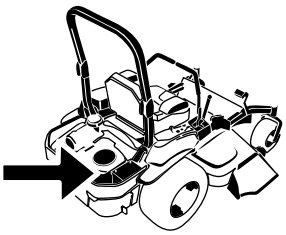

G008804
g008804

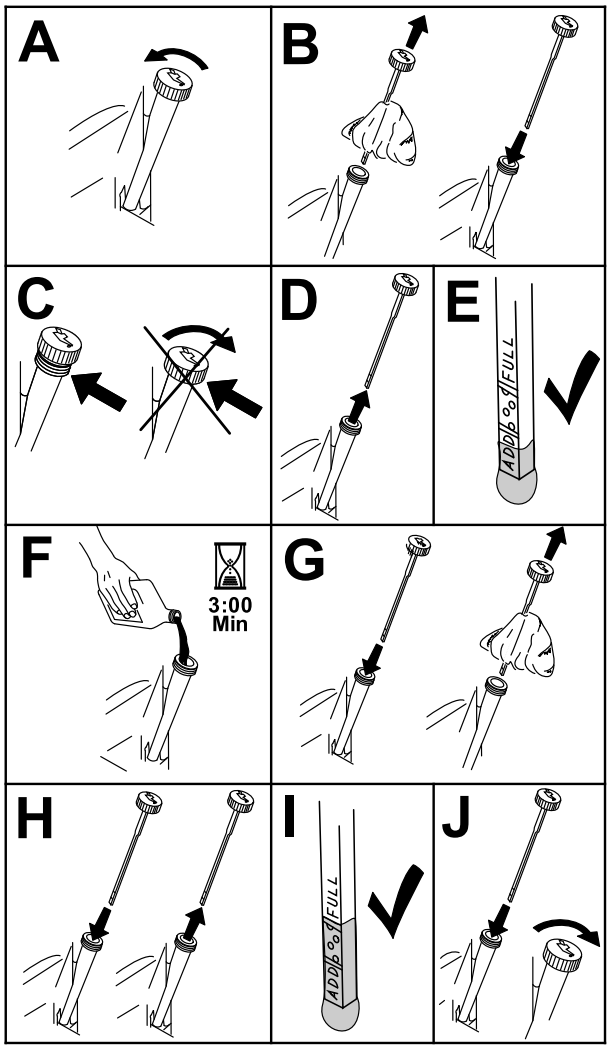

g194611

Figure 54

Changing the Engine Oil

Service Interval: After the first 8 hours

Every 100 hours (more often in dirty or dusty conditions).

Note: Dispose of the used oil at a recycling center.

1. Start the engine and let it run for 5 minutes.

   Note: This warms the oil so it drains better.

2. Park the machine so that the rear is slightly lower than the front to ensure that the oil drains completely.
3. Disengage the blade-control switch (PTO), move the motion-control levers to the NEUTRAL-LOCK position, and engage the parking brake.
4. Shut off the engine, remove the key, and wait for all moving parts to stop before leaving the operating position (Figure 55).

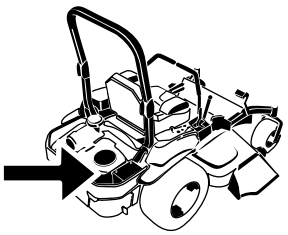

G008804
g008804

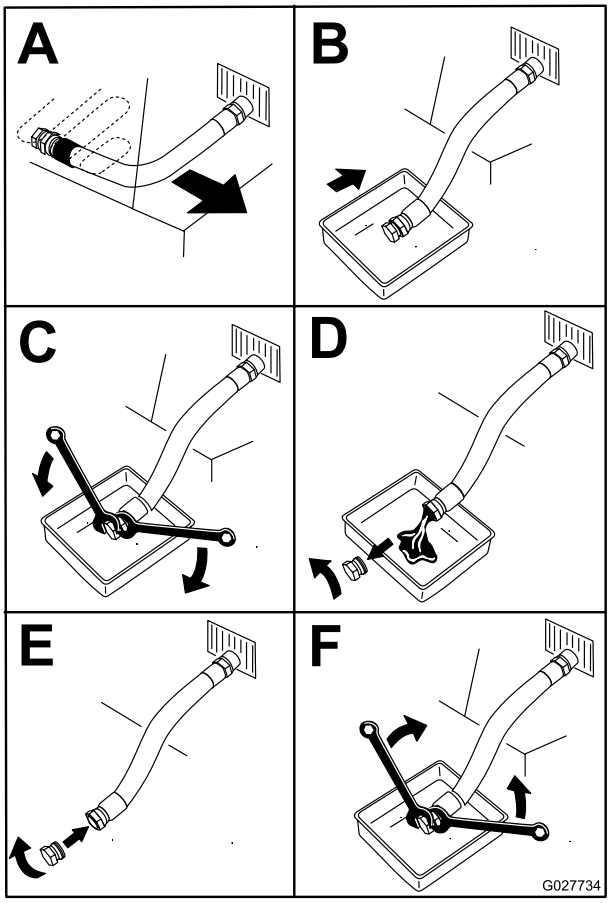

g027734

Figure 55

5. Slowly pour approximately 80% of the specified oil into the filler tube and slowly add the additional oil to bring it to the **Full** mark (Figure 56).

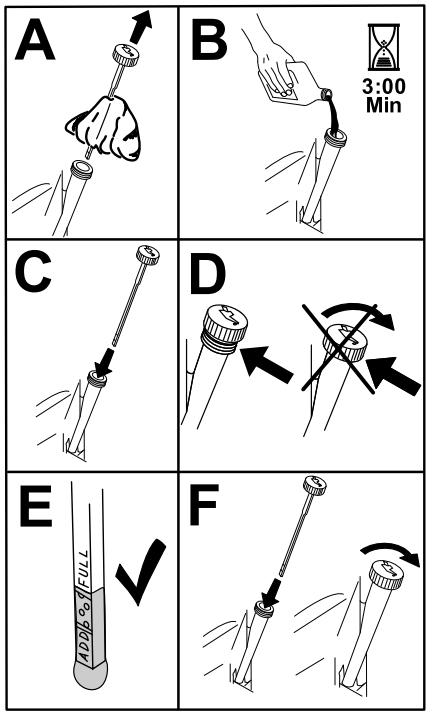

g194610

Figure 56

6. Start the engine and drive to a flat area.
7. Check the oil level again.

Changing the Engine-Oil Filter

Service Interval: Every 200 hours

Note: Change the engine-oil filter more frequently when operating conditions are extremely dusty or sandy.

1. Drain the oil from the engine; refer to Changing the Engine Oil (page 44).
2. Change the engine-oil filter (Figure 57).

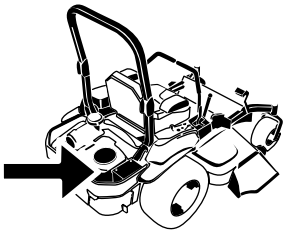

G008804
g008804

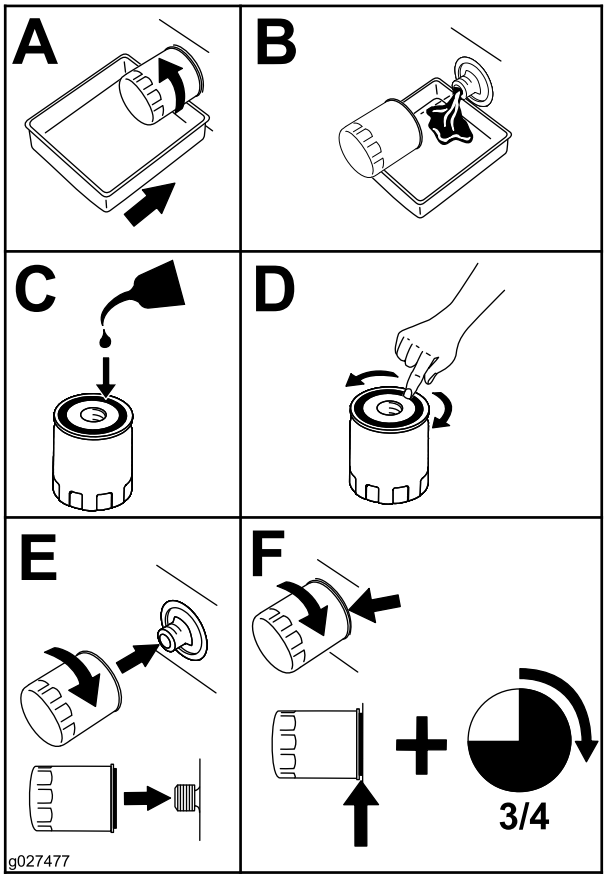

g027477

Figure 57

Note: Ensure that the oil-filter gasket touches the engine, and then an extra 3/4 turn is completed.

3. Fill the crankcase with the proper type of new oil; refer to Changing the Engine Oil (page 44).

Servicing the Spark Plug

Service Interval: Every 100 hours

Make sure that the air gap between the center and side electrodes is correct before installing the spark plug. Use a spark plug wrench for removing and installing the spark plug(s) and a gapping tool/feeler gauge to check and adjust the air gap. Install a new spark plug(s) if necessary.

Type : NGK® BPR4ES or equivalent

Air Gap: 0.76 mm (0.03 inch)

Removing the Spark Plug

1. Shut off the engine, remove the key, and wait for all moving parts to stop before leaving the operating position.
2. Disengage the blade-control switch (PTO), move the motion-control levers to the NEUTRAL-LOCK position, and engage the parking brake.
3. Remove the hydraulic-unit shroud and the 2 bolts attached to it (Figure 58).

   Note: This gives you access to the front spark plug.

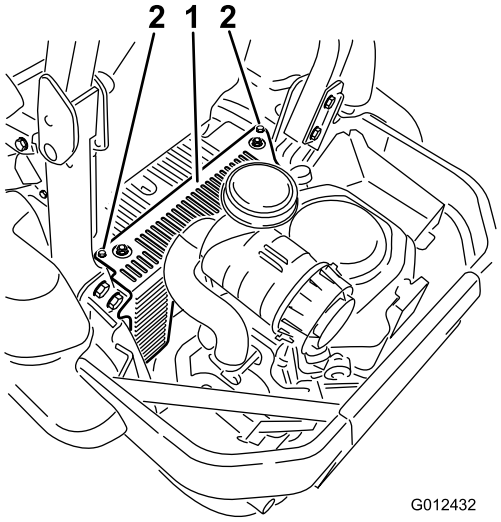

g012432

Figure 58

1. Hydraulic-unit shroud
2. Loosen these 2 bolts.

4. Remove the spark plug.

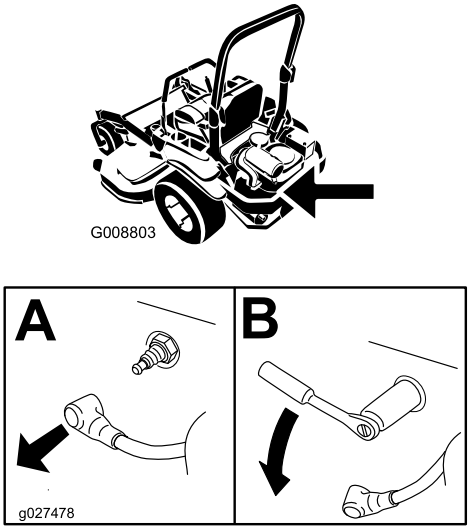

g008803

g027478

Figure 59

5. Install the hydraulic-unit shroud (Figure 58).

Checking the Spark Plug

Important: **Do not clean the spark plug(s). Always replace the spark plug(s) when it has: a black coating, worn electrodes, an oily film, or cracks.**

If you see light brown or gray on the insulator, the engine is operating properly. A black coating on the insulator usually means the air cleaner is dirty.

Set the gap to 0.76 mm (0.03 inch).

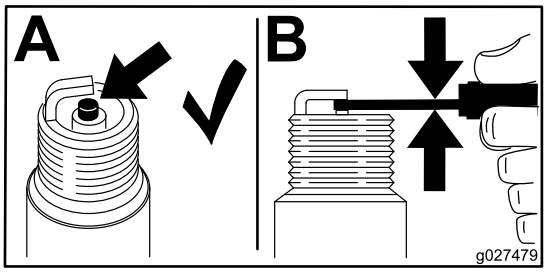

g027479

Figure 60

Installing the Spark Plug

Tighten the spark plug(s) to 24.4 to 29.8 N·m (18 to 22 ft-lb).

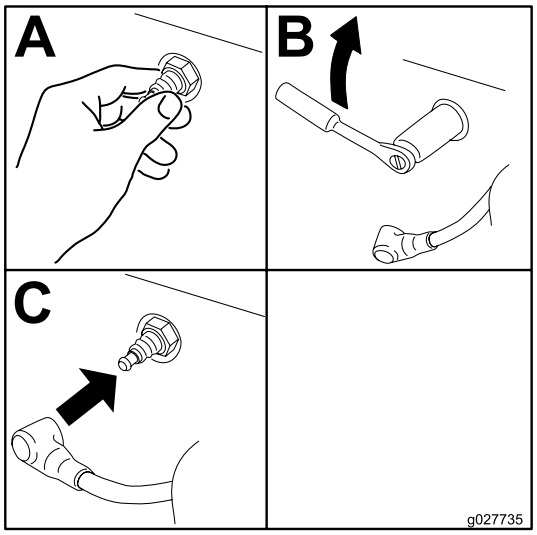

g027735

Figure 61

Checking the Spark Arrester

For Models with a Spark Arrester

Service Interval: Every 50 hours

⚠ WARNING

Hot exhaust system components may ignite fuel vapors even after you shut off the engine. Hot particles exhausted during engine operation may ignite flammable materials. Fire may result in personal injury or property damage.

Do not fuel or run the engine unless a spark arrester is installed.

1. Shut off the engine, wait for all moving parts to stop, remove the key, and engage the parking brake.
2. Wait for the muffler to cool.
3. If there are any breaks in the screen or welds are observed, replace the arrester.
4. If the screen is plugged, remove the arrester and shake loose particles out of the arrester, and clean the screen with a wire brush (soak in solvent if necessary).
5. Install the arrester on the exhaust outlet.

Fuel System Maintenance

Replacing the Fuel Filter

Service Interval: Every 500 hours/Yearly (whichever comes first) (more often in dirty or dusty conditions).

The fuel filter is located near the engine on the front or rear side of the engine.

1. Disengage the blade-control switch (PTO), move the motion-control levers to the NEUTRAL-LOCK position, and engage the parking brake.
2. Shut off the engine, remove the key, and wait for all moving parts to stop before leaving the operating position.
3. Allow the machine to cool down.
4. Close the fuel-shutoff valve under the seat (Figure 62).

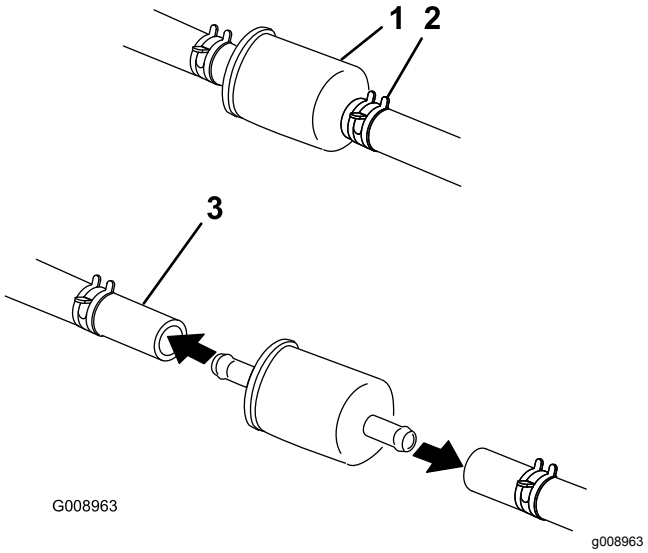

Figure 62

1. Fuel filter
2. Hose clamp
3. Fuel-shutoff valve

5. Squeeze the ends of the hose clamps together and slide them away from the filter (Figure 62).
6. Remove the filter from the fuel lines.
7. Install a new filter and move the hose clamps close to the filter (Figure 62).
8. Open the fuel-shutoff valve.

Important: **Install the fuel line hoses and secure with plastic ties the same as they were originally installed at the factory to keep the fuel line away from components that can cause fuel line damage.**

Servicing the Fuel Tank

Do not attempt to drain the fuel tank. Ensure that an Authorized Service Dealer drains the fuel tank and services any components of the fuel system.

Electrical System Maintenance

Electrical System Safety

- Disconnect the battery before repairing the machine. Disconnect the negative terminal first and the positive last. Connect the positive terminal first and the negative last.
- Charge the battery in an open, well-ventilated area, away from sparks and flames. Unplug the charger before connecting or disconnecting the battery. Wear protective clothing and use insulated tools.

WARNING

CALIFORNIA
Proposition 65 Warning

Battery posts, terminals, and related accessories contain lead and lead compounds, chemicals known to the State of California to cause cancer and reproductive harm. Wash hands after handling.

Servicing the Battery

Service Interval: Monthly

⚠ DANGER

Battery electrolyte contains sulfuric acid which is fatal if consumed and causes severe burns.

Do not drink electrolyte and avoid contact with skin, eyes or clothing. Wear safety glasses to shield your eyes and rubber gloves to protect your hands.

Removing the Battery

⚠ WARNING

Battery terminals or metal tools could short against metal machine components causing sparks. Sparks can cause the battery gasses to explode, resulting in personal injury.

- **When removing or installing the battery, do not allow the battery terminals to touch any metal parts of the machine.**
- **Do not allow metal tools to short between the battery terminals and metal parts of the machine.**

⚠ WARNING

Incorrect battery cable routing could damage the machine and cables causing sparks. Sparks can cause the battery gasses to explode, resulting in personal injury.

- **Always disconnect the negative (black) battery cable before disconnecting the positive (red) cable.**
- **Always connect the positive (red) battery cable before connecting the negative (black) cable.**

1. Disengage the blade-control switch (PTO), move the motion-control levers to the NEUTRAL-LOCK position, and engage the parking brake.
2. Shut off the engine, remove the key, and wait for all moving parts to stop before leaving the operating position.
3. Remove the battery as shown in Figure 63.

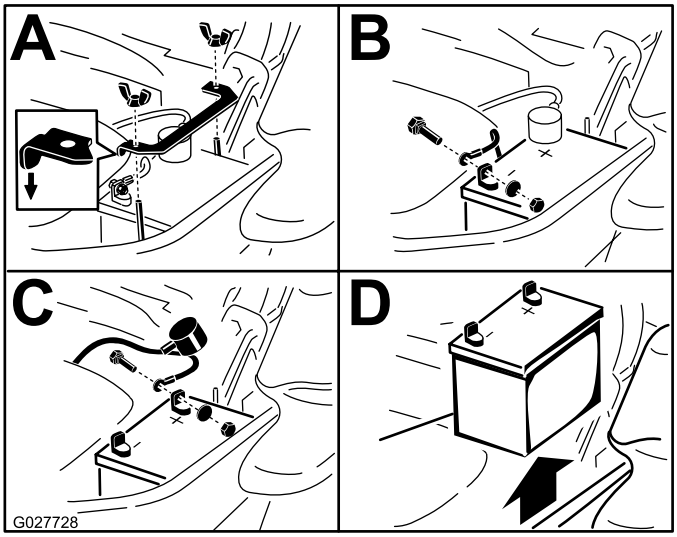

g027728

Figure 63

Installing the Battery

Note: Position the battery in the tray with the terminal posts opposite from the hydraulic tank (Figure 63).

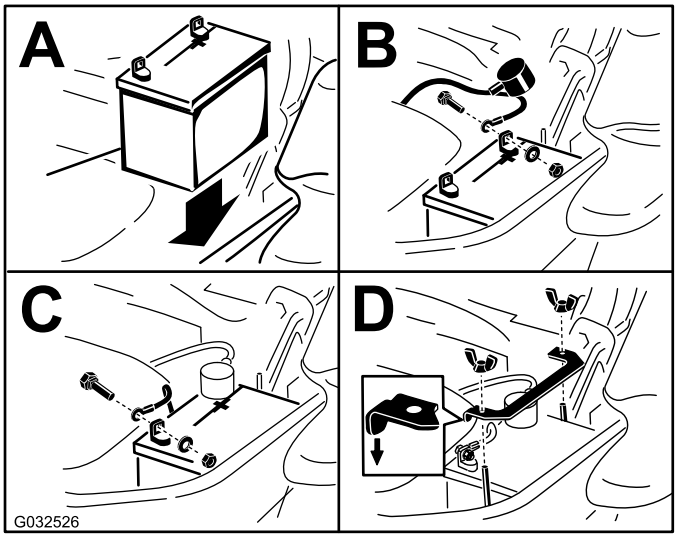

g032526

Figure 64

Charging the Battery

⚠ WARNING

Charging the battery produces gasses that can explode.

Never smoke near the battery and keep sparks and flames away from battery.

Important: **Always keep the battery fully charged (1.265 specific gravity). This is especially important to prevent battery damage when the temperature is below 0°C (32°F).**

1. Charge battery for 10 to 15 minutes at 25 to 30 A or 30 minutes at 10 A.
2. When the battery is fully charged, unplug the charger from the electrical outlet, then disconnect the charger leads from the battery posts (Figure 65).
3. Install the battery in the machine and connect the battery cables; refer to Installing the Battery (page 49).

   Note: Do not run the machine with the battery disconnected, electrical damage may occur.

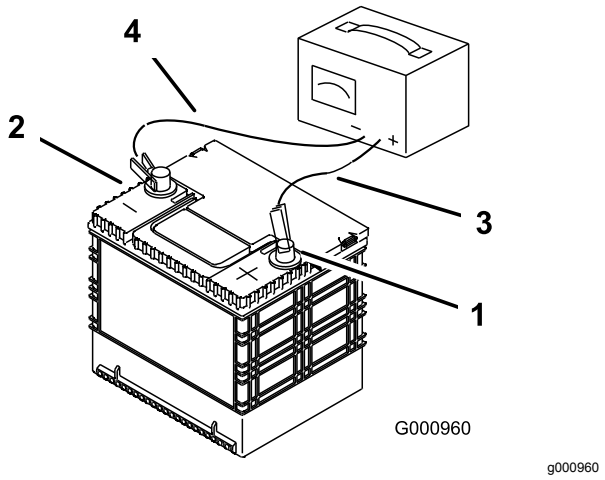

Figure 65

1. Positive battery post
2. Negative battery post
3. Red (+) charger lead
4. Black (-) charger lead

Servicing the Fuses

The electrical system is protected by fuses. It requires no maintenance, however, if a fuse blows check the component/circuit for a malfunction or short.

1. The fuses are located on the console to the right of the seat (Figure 66).
2. To replace the fuses, pull out on the fuse to remove it.
3. Install a new fuse (Figure 66).

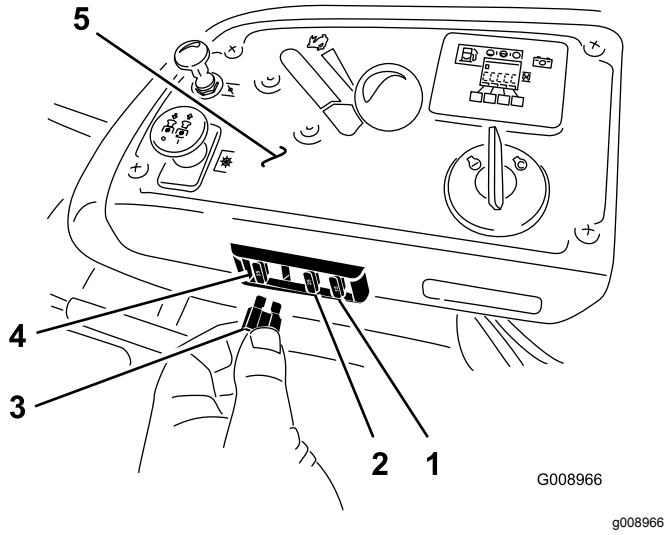

Figure 66

1. Optional accessory (15 A)
2. Charge (25 A)
3. PTO (10 A)
4. Main (25 A)
5. Console

Drive System Maintenance

Checking the Seat Belt

Service Interval: Before each use or daily

Visually inspect seat belt for wear, cuts, and proper operation of retractor and buckle. Replace before operating if damaged.

Checking the Rollover Protection System (ROPS) Knobs

Service Interval: Before each use or daily

⚠ WARNING

To avoid injury or death from rollover: keep the roll bar in the fully raised locked position and use the seat belt.

Ensure that the seat is secured to the machine.

Check that both the mounting hardware and the knobs are in good working condition. Make sure that the knobs are fully engaged with the roll bar in the raised position. The upper hoop of the roll bar may need to be pushed forward or pulled rearward to get both knobs fully engaged (Figure 67).

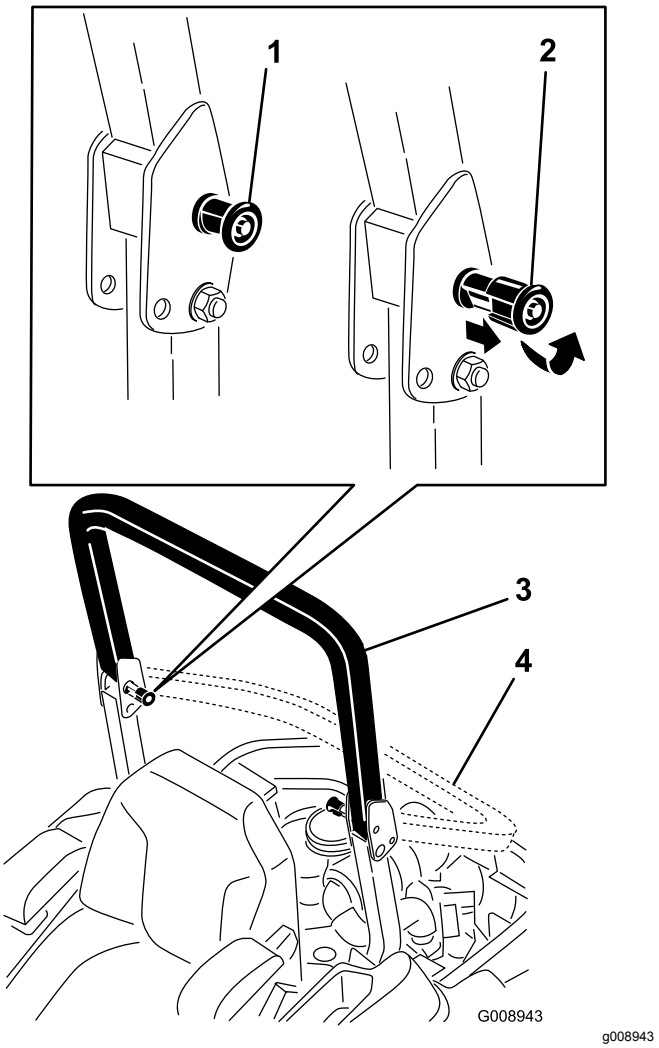

Figure 67

1. ROPS knob (locked position)
2. Pull the ROPS knob out, and rotate it 90 degrees to change the roll bar position
3. Roll bar in the upright position
4. Roll bar in the folded position

Adjusting the Tracking

1. Disengage the blade-control switch (PTO).
2. Drive to an open, flat area, and move the motion-control levers to the NEUTRAL-LOCK position.
3. Move the throttle midway between FAST and SLOW.
4. Move both motion-control levers forward until they both hit the stops in the T-slot.
5. Check which way the machine tracks.
6. If it tracks to the right, loosen the bolts and adjust the left stop plate rearward on the left T-slot until the machine tracks straight (Figure 68).
7. If it tracks to the left, loosen the bolts and adjust the right stop plate rearward on the right T-slot until the machine tracks straight (Figure 68).
8. Tighten the stop plate (Figure 68).

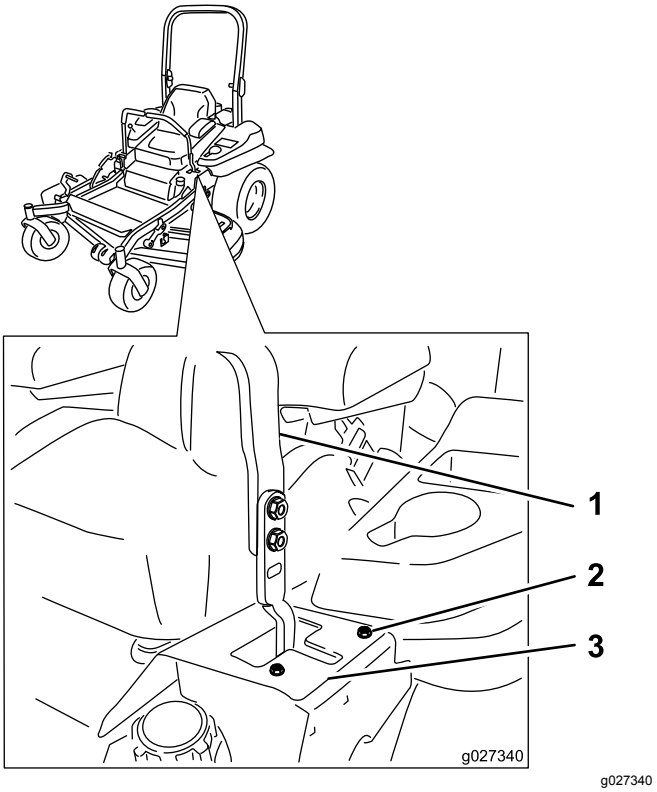

Figure 68

Left control lever shown

1. Control lever
2. Bolt
3. Stop plate

Checking the Tire Pressure

Service Interval: Every 50 hours/Monthly (whichever comes first)

Maintain the air pressure in the rear tires at 90 kPa (13 psi). Uneven tire pressure can cause uneven cut. Check the tires when they are cold to get the most accurate pressure reading.

Note: The front tires are semi-pneumatic tires and do not require air pressure maintenance.

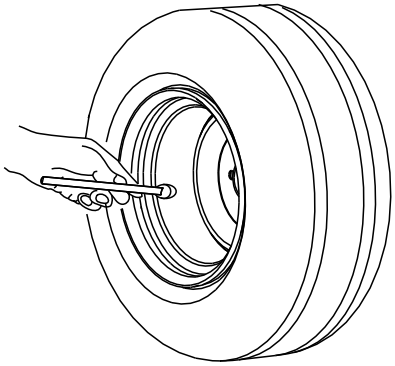

g001055

Figure 69

Checking the Wheel-Lug Nuts

Check and torque the wheel lug nuts to 122 to 129 N·m (90 to 95 ft-lb).

Checking the Wheel-Hub Slotted Nut

Service Interval: After the first 100 hours

Every 500 hours

Check and ensure that the torque of the slotted nut is 286 to 352 N·m (211 to 260 ft-lb).

Note: Do not use anti-seize compound on wheel hub.

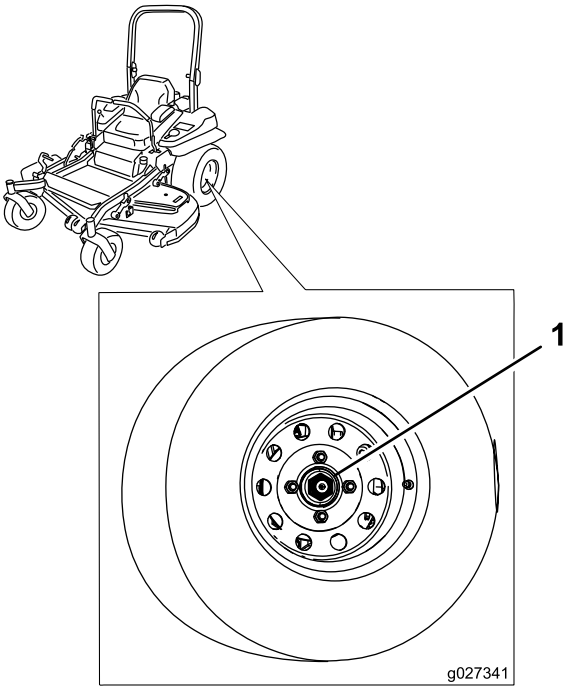

g027341

Figure 70

1. Slotted nut

Adjusting the Caster-Pivot Bearing

Service Interval: Every 500 hours/Yearly (whichever comes first)

1. Disengage the blade-control switch (PTO), move the motion-control levers to the NEUTRAL-LOCK position, and engage the parking brake.
2. Shut off the engine, remove the key, and wait for all moving parts to stop before leaving the operating position.
3. Remove the dust cap from caster and tighten the locknut (Figure 71).
4. Tighten the locknut until the spring washers are flat, and then back off a 1/4 turn to properly set the preload on the bearings (Figure 71).

   Important: **Make sure that the spring washers are installed correctly as shown in Figure 71.**

5. Install the dust cap (Figure 71).

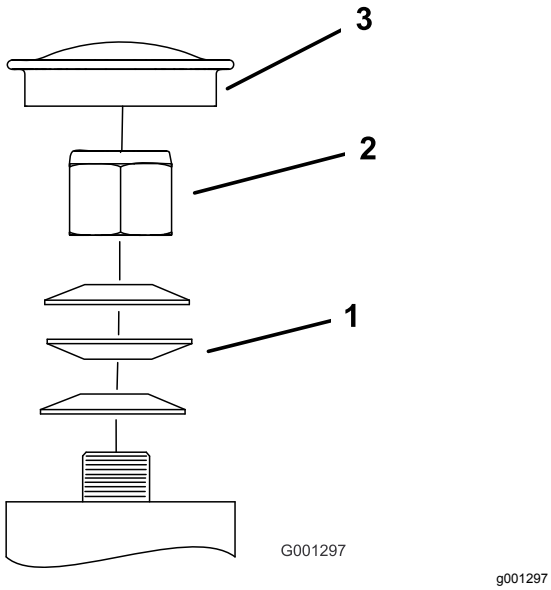

Figure 71

1. Spring washers
2. Lock nut
3. Dust cap

Using the Clutch Shim

Some later model year units have been built with clutches that contain a brake shim. When the clutch brake has worn to the point where the clutch no longer engages consistently, the shim can be removed to extend the clutch life.

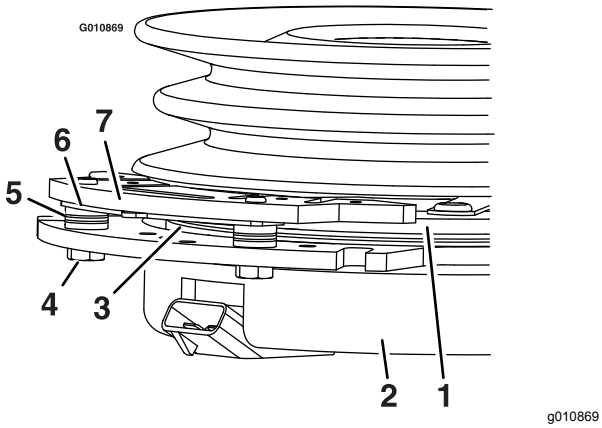

Figure 72

1. Armature
2. Field shell
3. Rotor
4. Brake-mounting bolt
5. Brake spacer
6. Re-gap shim
7. Brake pole

Removing the Clutch Shim

1. Shut off the engine, wait for all moving parts to stop, remove the key, engage the parking brake, and allow the machine to cool completely before starting these instructions.
2. Using an air compressor, blow out any debris from under the brake pole and around the brake spacers (Figure 73).

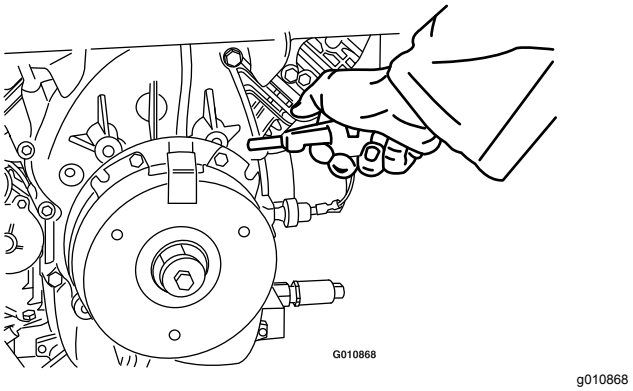

Figure 73

3. Check the condition of the wire-harness leads, connectors, and terminals.

   Note: Clean or repair as necessary.
4. Verify that 12V is present at the clutch connector when the blade-control switch (PTO) switch is engaged.
5. Measure the gap between the rotor and armature. If the gap is greater than 1 mm (0.04 inch), proceed with the following steps:

   A. Loosen both brake-mounting bolts 1/2 to 1 full turn as shown in Figure 74.

   Note: Do not remove the brake pole from the field shell/armature. The brake pole has worn to match the armature and needs to continue to match after the shim is removed to ensure proper brake torque.

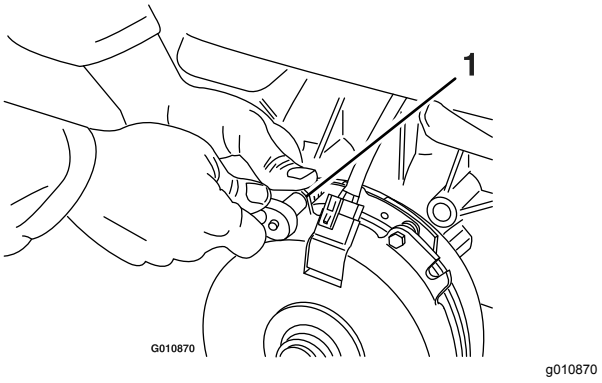

Figure 74

1. Brake-mounting bolt

B. Using needle-nose pliers, or by hand, hold the tab and remove the shim (Figure 75).

Note: Do not discard the shim until proper clutch function has been confirmed.

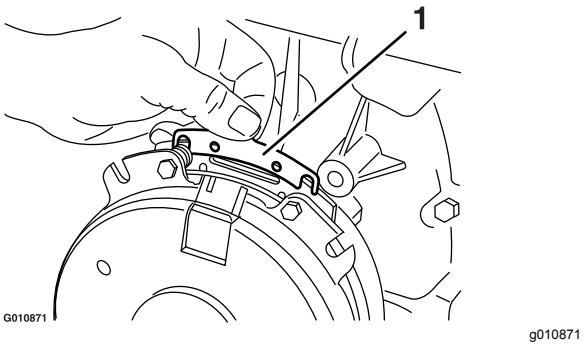

Figure 75

1. Shim

C. Using a pneumatic line, blow out any debris from under the brake pole and around the brake spacers.

D. Torque each bolt (M6 x 1) to 13 N·m (10 ft-lb) +/-0.7 N·m (0.5 ft-lb).

E. Using a 0.25 mm (0.01 inch) thick feeler gauge, verify that a gap is present between the rotor and the armature face on both sides of the brake pole as shown in Figure 76 and Figure 77.

Note: Due to the way the rotor and the armature faces wear (peaks and valleys) it is sometimes difficult to measure the gap accurately.

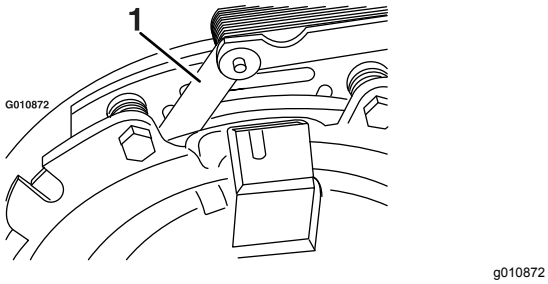

Figure 76

1. Feeler gauge

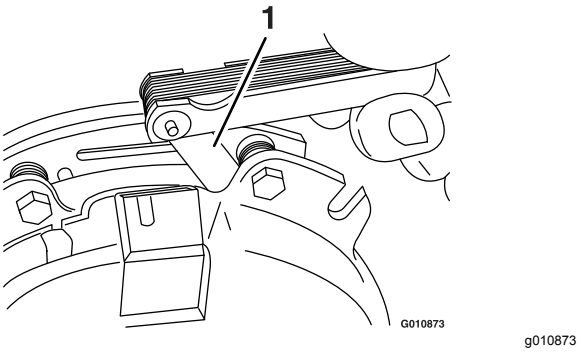

Figure 77

1. Feeler gauge

- If the gap is less than 0.25 mm (0.01 inch), then install the shim; refer to Troubleshooting (page 74).
- If the gap is sufficient, proceed to the safety check in step F.

F. Perform the following safety check:

i. Sit on the seat and start the engine.

ii. Make sure that the blades do not engage with the blade-control switch (PTO) in the OFF position, and that the clutch is disengaged.

If the clutch does not disengage, install the shim again; refer to Troubleshooting (page 74).

iii. Engage and disengage the blade-control switch (PTO) 10 consecutive times to ensure that the clutch is functioning properly.

Cooling System Maintenance

Cleaning the Engine Screen and Engine-Oil Cooler

Service Interval: Before each use or daily

Remove any buildup of grass, dirt, or other debris from the oil cooler (Figure 78).

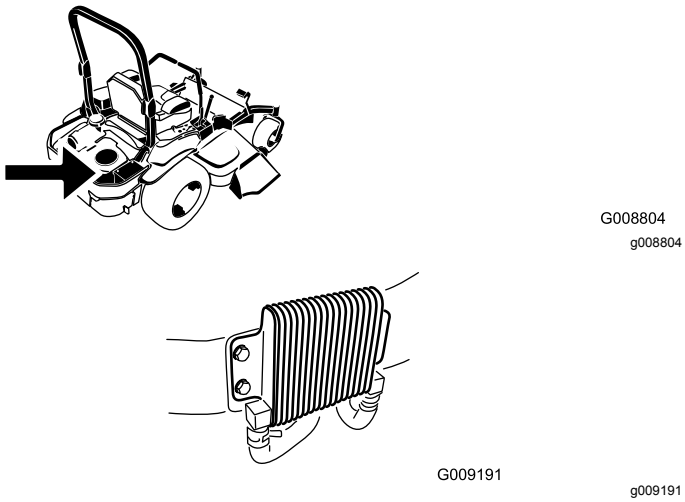

Figure 78

Before each use, remove any buildup of grass, dirt, or other debris from the engine screen. This helps ensure adequate cooling, correct the engine speed, and reduces the possibility of overheating and mechanical damage to the engine (Figure 79).

Cleaning the Engine-Cooling Fins and Shrouds

Service Interval: Every 100 hours/Yearly (whichever comes first)

1. Disengage the blade-control switch (PTO) and engage the parking brake.
2. Shut off the engine, remove the key, and wait for all moving parts to stop before leaving the operating position.
3. Remove the air-intake screen, the recoil starter, and the fan housing (Figure 79).
4. Clean the debris and grass from the engine parts.
5. Install the air-intake screen, the recoil starter, and the fan housing (Figure 79).

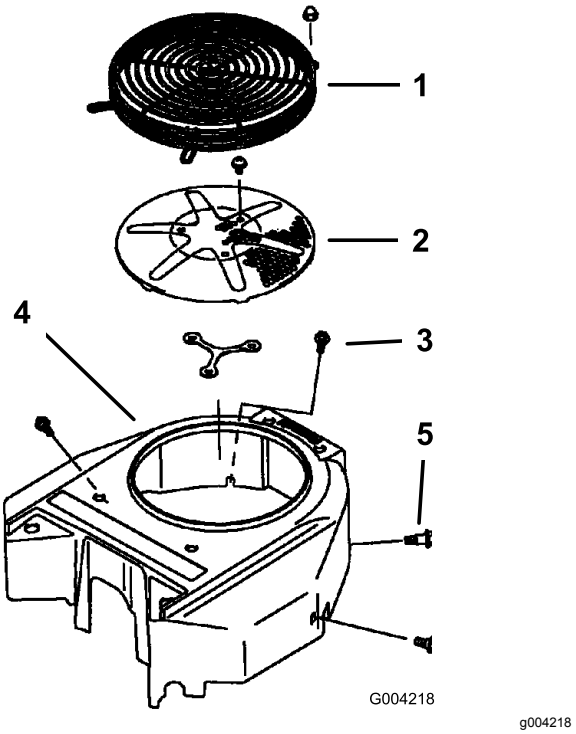

Figure 79

1. Engine guard
2. Engine air-intake screen
3. Bolt
4. Fan housing
5. Screw

Checking and Cleaning the Hydraulic Unit Shrouds

Service Interval: Before each use or daily

Important: **The fasteners on the covers of this machine are designed to remain on the cover after removal. Loosen all of the fasteners on each cover a few turns so that the cover is loose but still attached, then go back and loosen them until the cover comes free. This prevents you from accidentally stripping the bolts free of the retainers.**

1. Disengage the blade-control switch (PTO) and engage the parking brake.
2. Shut off the engine, remove the key, and wait for all moving parts to stop before leaving the operating position.
3. Move the seat forward.
4. Wait for the engine and hydraulic system to cool.
5. Clean the debris and grass from the hydraulic unit shrouds (Figure 80).

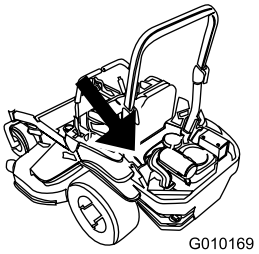

g010169

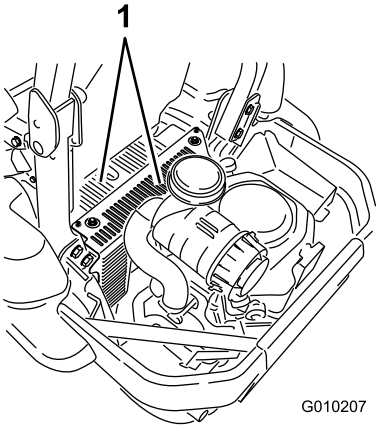

g010207

Figure 80

1. Hydraulic unit shrouds

6. Over each dipstick, remove the cover and the bolt attached to the cover . Clean around each dipstick and hydraulic unit (Figure 81).

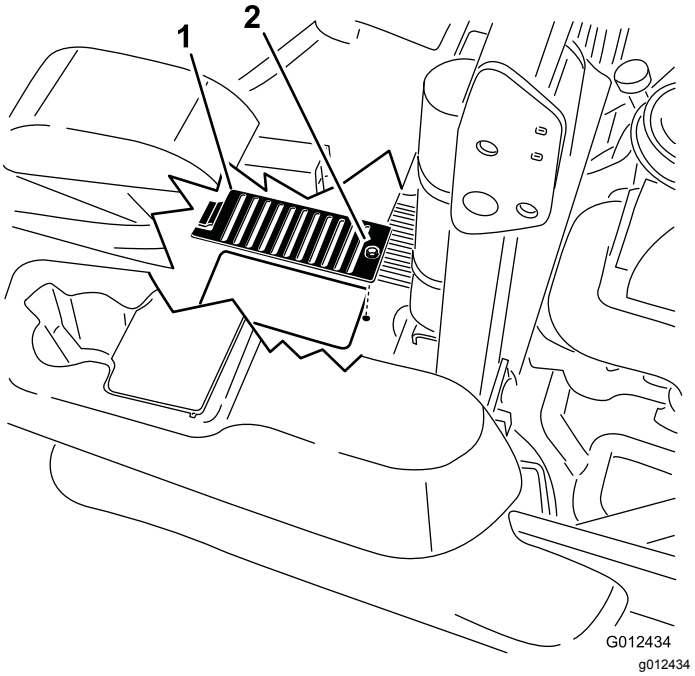

g012434

Figure 81

1. Cover
2. Bolt

7. Position the seat.

Brake Maintenance

Adjusting the Parking Brake

Service Interval: After the first 100 hours

Every 500 hours thereafter

Note: This procedure must be followed after the first 100 hours or when a brake component has been removed or replaced.

1. Drive the machine onto a level surface.
2. Disengage the blade-control switch (PTO), move the motion control levers to the NEUTRAL-LOCK position, and engage the parking brake.
3. Shut off the engine, wait for all moving parts to stop, and remove the key.
4. Raise the back of the machine and support the machine with jack stands.

⚠ DANGER

Mechanical or hydraulic jacks may fail to support machine and cause a serious injury.

- **Use jack stands when supporting machine.**
- **Do not use hydraulic jacks.**

5. Remove the rear tires from the machine.
6. Remove any debris from the brake area.
7. Rotate the drive-wheel release handle to the released position; refer to Using the Drive-Wheel-Release Valves (page 32).
8. Check to see if there is a visible gap between the L-bracket and the linkage stop (Figure 82).

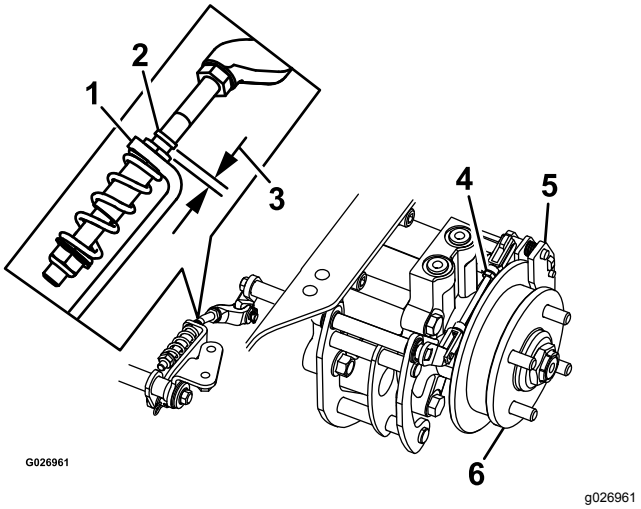

Figure 82

Left Side Shown

1. L-bracket
2. Linkage stop
3. Gap
4. Rear linkage assembly
5. Caliper
6. Wheel hub

9. Disengage the parking brake, the lever should be in the down position.
10. Turn the wheel hub by hand in both directions relative to the caliper; the wheel hub should move freely between the caliper.
11. If a gap is needed or the wheel hub does not move freely:
    A. Disengage the parking brake.
    B. Disconnect and fine-tune the rear linkage assembly:
        - Shorten the link to create a gap.
        - Lengthen the link to allow wheel hub movement.
    C. Connect the rear linkage assembly.
12. Engage the parking brake and check the gap.
13. Repeat steps 9 through 13 until a visible gap is achieved and the wheel hub rotates freely.
14. Repeat this procedure for the brake on the opposite side.
15. Rotate the drive-wheel release handle to the operating position; refer to Using the Drive-Wheel-Release Valves (page 32).
16. Install the rear tires and torque the lug nuts; refer to Checking the Wheel-Lug Nuts (page 52).
17. Remove the jack stands.

Belt Maintenance

Inspecting the Belts

Service Interval: Every 50 hours

Replace the belt if it is worn. The signs of a worn belt include squealing while the belt is rotating; the blades slipping while cutting grass; and frayed edges, burn marks, and cracks on the belt.

Replacing the Mower Belt

1. Disengage the blade-control switch (PTO), move the motion-control levers to the NEUTRAL-LOCK position, and engage the parking brake.
2. Shut off the engine, remove the key, and wait for all moving parts to stop before leaving the operating position.
3. Lower the mower to the 76 mm (3 inch) height-of-cut.
4. Loosen the bottom bolt holding the mower-deck curtain to the mower deck. Refer to Releasing the Mower-Deck Curtain (page 38).
5. Remove the sheet-metal guard. Refer to Removing the Sheet-Metal Guard (page 39)
6. Remove the belt covers (Figure 83).

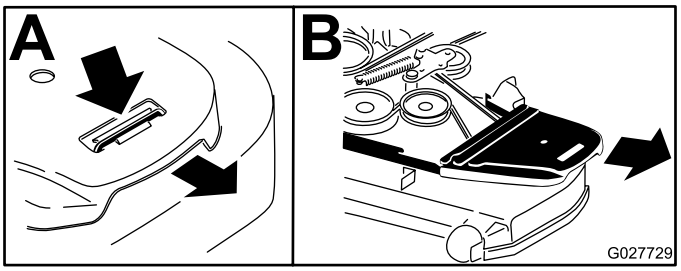

g027729

Figure 83

1. Push the tab down
2. Remove the belt cover

7. Use a ratchet in the square hole in the idler arm to remove tension on the idler spring (Figure 84).
8. Remove the belt from the mower-deck pulleys.
9. Remove the belt guide on the spring-loaded idler arm (Figure 84).
10. Remove the existing belt.
11. Install the new belt around the mower pulleys and the clutch pulley under the engine (Figure 84).

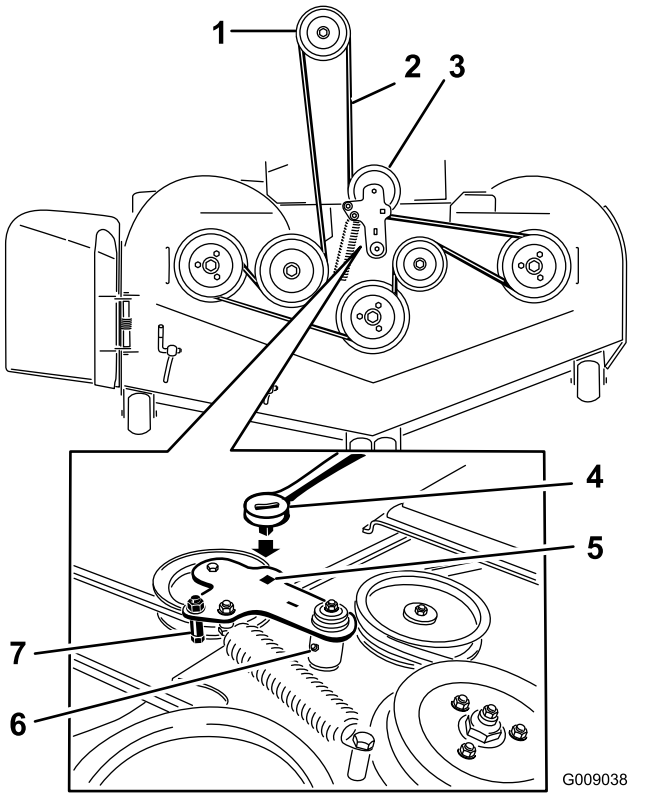

g009038

Figure 84

1. Clutch pulley
2. Mower belt
3. Spring-loaded idler pulley
4. Ratchet
5. Square hole in the idler arm for the ratchet
6. Idler-grease fitting
7. Belt guide

12. Install the belt guide on the idler arm (Figure 84).
13. Using the ratchet in the square hole, install the idler spring (Figure 84).

    Note: Make sure that the spring ends are seated in the anchor grooves.
14. Install the belt covers (Figure 85).

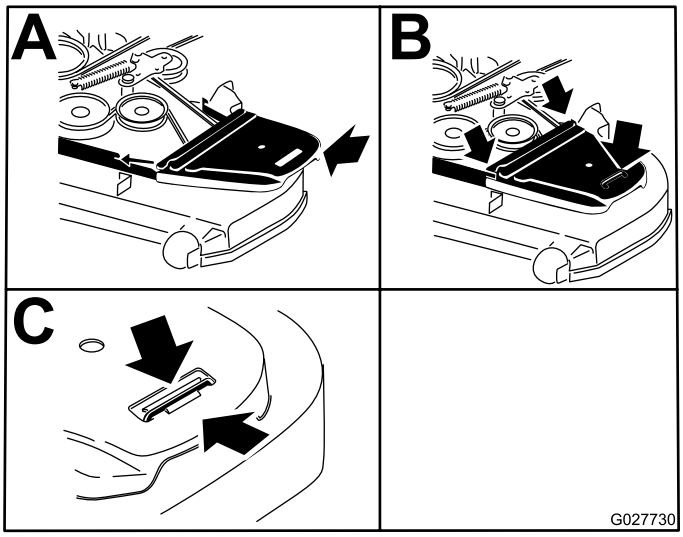

g027730

Figure 85

1. Position the belt cover
2. Slide the belt cover under the side catches
3. Ensure that the tab is under the metal catch

15. Install the sheet-metal guard. Refer to Removing the Sheet-Metal Guard (page 39).
16. Tighten the bolt for the mower-deck curtain. Refer to Releasing the Mower-Deck Curtain (page 38).

Replacing the Hydraulic Pump-Drive Belt

1. Disengage the blade-control switch (PTO) and engage the parking brake.
2. Shut off the engine, remove the key, and wait for all moving parts to stop before leaving the operating position.
3. Remove the mower belt; refer to Replacing the Mower Belt (page 58).
4. Raise the machine and support it with jack stands (Figure 86).

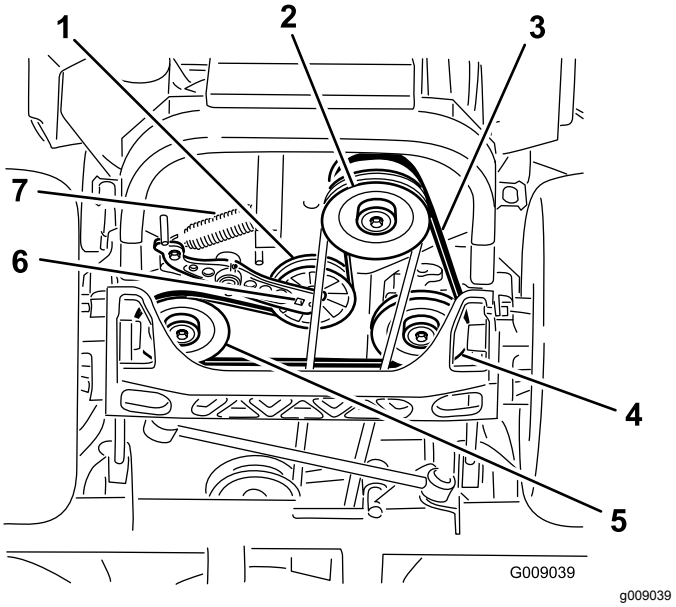

g009039

Figure 86

1. Idler pulley
2. Clutch pulley
3. Pump-drive belt
4. Right hydraulic-pump pulley
5. Left hydraulic-pump pulley
6. Square hole in the idler arm
7. Idler spring

5. Use a ratchet in the square hole in the idler arm to remove the idler spring (Figure 86).
6. Unhook the idler spring from the frame (Figure 86).
7. Remove the belt from the hydraulic-unit-drive pulleys and the engine pulley.
8. Install the new belt around engine pulley and the 2 drive pulleys.
9. Using a ratchet in the square hole in the idler arm, install the idler spring to the frame (Figure 86).
10. Install the mower belt; refer to Replacing the Mower Belt (page 58).

Controls System Maintenance

Adjusting the Control-Handle Position

There are 2 height positions for the control levers—high and low. Remove the bolts to adjust the height for the operator.

1. Disengage the blade-control switch (PTO), move the motion-control levers to the NEUTRAL-LOCK position, and engage the parking brake.
2. Shut off the engine, remove the key, and wait for all moving parts to stop before leaving the operating position.
3. Loosen the bolts and flange nuts installed in the levers (Figure 87).
4. Align the levers in the front-to-rear position by bringing the levers together to the NEUTRAL position, and slide them until they are aligned, then tighten the bolts (Figure 88).

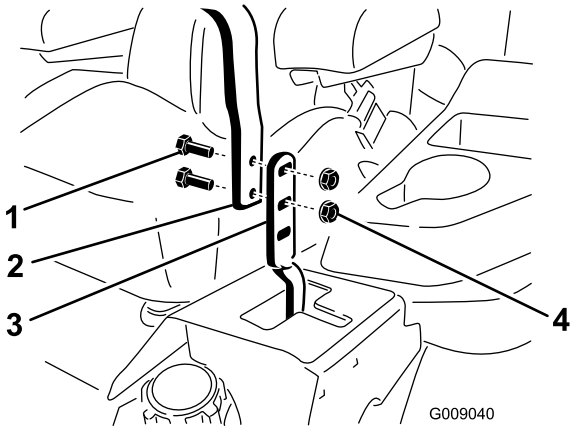

g009040

Figure 87

1. Bolt
2. Handle
3. Control lever
4. Nut

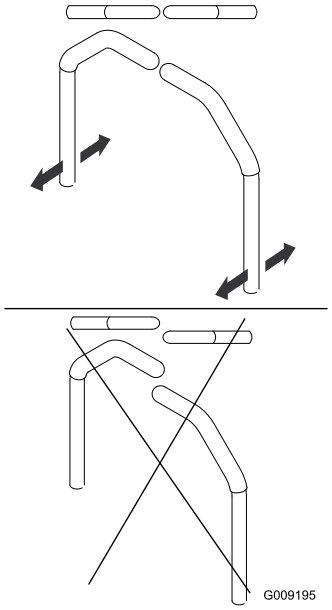

g009195

Figure 88

5. If the ends of the levers hit against each other, refer to Adjusting the Control-Handle Position (page 60).
6. Repeat to adjust the control levers.

Adjusting the Motion-Control Linkage

Located on either side of the fuel tank, below the seat are the pump-control linkages. Rotating the pump linkage with a wrench (1/2 inch) allows fine tuning adjustments so that the machine does not move in neutral. Any adjustments should be made for neutral positioning only.

⚠ WARNING

Engine must be running and drive wheels must be turning so motion control adjustment can be performed. Contact with moving parts or hot surfaces may cause personal injury.

Keep fingers, hands, and clothing clear of rotating components and hot surfaces.

1. Prior to starting the engine, push the deck-lift pedal, and remove the height-of-cut pin.
2. Lower deck to the ground.
3. Raise the rear of machine up and support it with jack stands (or equivalent support).

   Note: Raise the machine just high enough to allow the drive wheels to turn freely.

4. Remove the electrical connection from the seat safety switch, located under the bottom cushion of the seat.

   Note: The switch is a part of the seat assembly.

5. **Temporarily** install a jumper wire across the terminals in the connector of the main wire harness.
6. Start the engine and run it at full throttle and disengage the brake.

   Note: The brake must be engaged and the motion-control levers must be out to start the engine. The operator does not have to be in the seat, because of the jumper wire being used.

7. Run the unit for at least 5 minutes with the drive levers at full forward speed to bring the hydraulic fluid up to the operating temperature.

   Note: The motion-control levers needs to be in neutral while making any necessary adjustments.

8. Bring the motion-control levers into the NEUTRAL position.
9. Adjust the pump control rod lengths by rotating the double nuts on the rod in the appropriate direction until the wheels slightly creep in reverse (Figure 89).

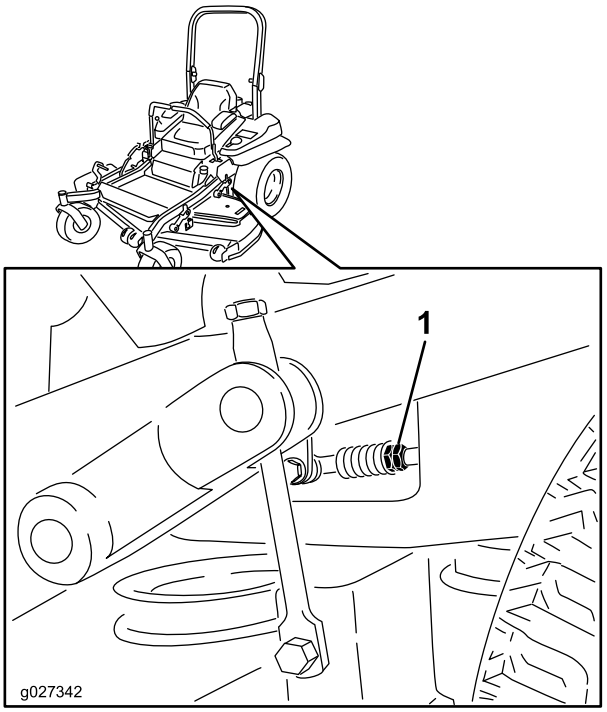

g027342

Figure 89

1. Double nuts

10. Move the motion-control levers to the reverse position and while applying slight pressure to the lever, allow the reverse-indicator springs to bring the levers back to neutral.

    Note: The wheels must stop turning or slightly creep in reverse.

11. Shut off the unit, remove the jumper wire from the wire harness, and plug the connector into the seat switch.
12. Remove the jack stands.
13. Raise the deck and install the height-of-cut pin.
14. Check that the machine does not creep in neutral with the park brakes disengaged.

Adjusting the Motion-Control Damper

The top damper mounting bolt can be adjusted to obtain a more desired motion-control lever resistance. See Figure 90 for mounting options.

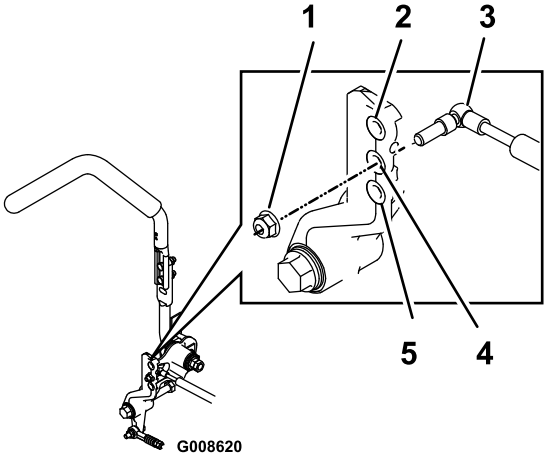

g008620

Figure 90

Right Control Shown

1. Torque the locknut to 23 N·m (17 ft-lb). The bolt must protrude past the end of the locknut after torquing.
2. Most resistance (firmest feel)
3. Damper
4. Medium resistance (medium feel)
5. Least resistance (softest feel)

Adjusting the Motion Control Neutral-Lock Pivot

The flanged nut can be adjusted to obtain a more desired motion-control lever resistance when moving it to the NEUTRAL-LOCK position. See Figure 91 for adjustment options.

1. Loosen the jam nut.
2. Tighten or loosen the flanged nut to the desired feel.

   Note: For more resistance, tighten the flanged nut.

   Note: For less resistance, loosen the flanged nut
3. Tighten the jam nut.

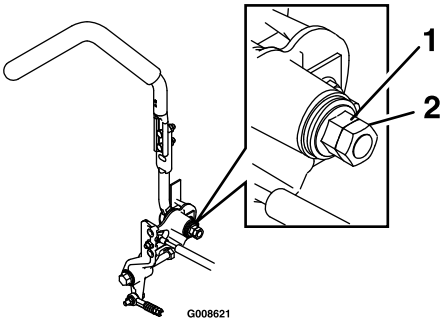

g008621

Figure 91

1. Flanged nut
2. Jam nut

Hydraulic System Maintenance

Hydraulic System Safety

- **Ensure that all hydraulic-fluid hoses and lines are in good condition and all hydraulic connections and fittings are tight before applying pressure to the hydraulic system.**
- **Keep your body and hands away from pinhole leaks or nozzles that eject high-pressure hydraulic fluid.**
- **Use cardboard or paper to find hydraulic leaks.**
- **Safely relieve all pressure in the hydraulic system before performing any work on the hydraulic system.**
- **Seek immediate medical attention if fluid is injected into skin. Injected fluid must be surgically removed within a few hours by a doctor.**

Servicing the Hydraulic System

Hydraulic-Fluid Type: Toro® HYPR-OIL™ 500 hydraulic fluid or Mobil® 1 15W-50.

Important: **Use the specified fluid. Other fluids could damage the hydraulic system.**

Each Hydraulic System Fluid Capacity: 1.5 L (52 oz) per side with filter change

Checking the Hydraulic Fluid

Service Interval: Every 50 hours—Check the hydraulic-fluid level.

1. Position the machine on a level surface.
2. Disengage the blade-control switch (PTO), move the motion-control levers to the NEUTRAL-LOCK position, and engage the parking brake.
3. Shut off the engine, remove the key, and wait for all moving parts to stop before leaving the operating position.
4. Allow the engine and the hydraulic system to cool for 10 minutes.

   Note: The oil level on the dipstick is incorrect when the oil is checked and the unit is hot.
5. Move the seat forward.
6. Clean the area around the dipsticks of hydraulic-system reservoirs (Figure 92).
7. Remove 1 dipstick from the hydraulic reservoir (Figure 92).

8. Wipe the dipstick off and thread the dipstick into the reservoir.
9. Remove the dipstick and look at the end (Figure 92).

   Important: **Do not overfill the hydraulic units with oil as damage may occur. Do not run the machine with the oil below the add mark.**
10. If the oil level is at the add mark , slowly pour only enough oil into the hydraulic reservoir to raise the level to the full or **H** line.
11. Install the dipstick.
12. Repeat the procedure for the opposite dipstick.

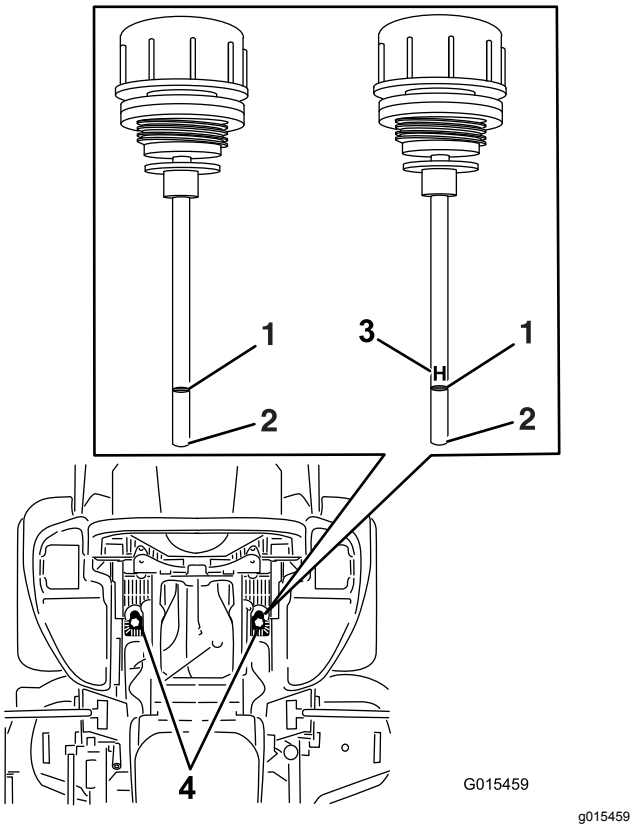

Figure 92

Either dipstick is used in the machine

1. Full
2. Add
3. **H** —means high level
4. Dipstick locations under seat

⚠ WARNING

Hydraulic fluid escaping under pressure can penetrate skin and cause injury.

- **If hydraulic fluid is injected into the skin it must be surgically removed within a few hours by a doctor familiar with this type of injury. Gangrene may result if this is not done.**
- **Keep your body and hands away from pinhole leaks or nozzles that eject high-pressure hydraulic fluid.**
- **Use cardboard or paper to find hydraulic leaks.**
- **Safely relieve all pressure in the hydraulic system before performing any work on the hydraulic system.**
- **Make sure that all hydraulic-oil hoses and lines are in good condition, and all hydraulic connections and fittings are tight before applying pressure to the hydraulic system.**

Replacing the Hydraulic Fluid and Filters

Service Interval: After the first 250 hours—Change the hydraulic filters and hydraulic fluid when using any type of fluid.

Every 250 hours—Change the hydraulic filters and hydraulic fluid when using Mobil® 1 fluid (more often in dirty or dusty conditions).

Every 500 hours—Change the hydraulic filters and hydraulic fluid when using Toro® HYPR-OIL™ 500 hydraulic fluid (more often in dirty or dusty conditions).

To replace the hydraulic fluid, the filters need to be removed. Replace both at the same time; refer to Servicing the Hydraulic System (page 62) for the oil specifications.

1. Disengage the blade-control switch (PTO), move the motion-control levers to the NEUTRAL-LOCK position, and engage the parking brake.
2. Shut off the engine, remove the key, and wait for all moving parts to stop before leaving the operating position.
3. Raise the machine and support it with jack stands (Figure 93).

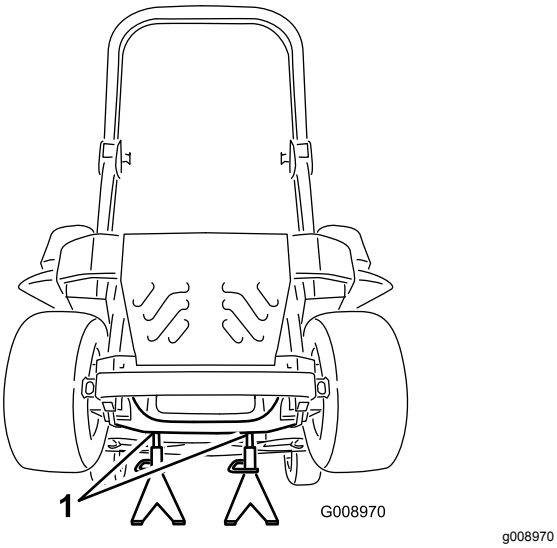

Figure 93

1. Jack stands

4. Remove both the mower belt and the pump-drive belt; refer to Replacing the Mower Belt (page 58) and Replacing the Hydraulic Pump-Drive Belt (page 59).

   Note: This prevents oil from getting on the belts.

5. Place a drain pan under the filter, remove the old filter, and wipe the surface clean (Figure 94).

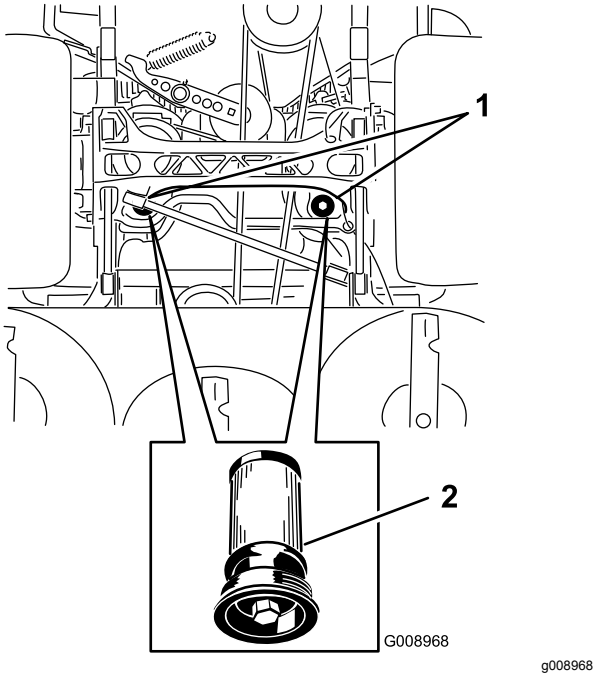

Figure 94
Bottom view of the machine

1. Filter locations
2. Hydraulic filter

6. Apply a thin coat of hydraulic fluid to the rubber gasket on the replacement filter (Figure 94).
7. Install the replacement hydraulic filter.
8. Install the pump-drive belt and the mower belt.
9. Remove the jack stands and lower the machine (Figure 93).
10. Add oil to the hydraulic reservoir and check for any leaks.
11. Clean up any spilled oil.
12. Start the engine and let it run for about 2 minutes to purge air from the system.
13. Shut off the engine and check for leaks.
14. Check the oil level while the oil is cold.
15. If required, add oil to the hydraulic reservoir.

    Note: Do not overfill.

Mower Deck Maintenance

Leveling the Mower Deck

Setting up the Machine

Note: Ensure that the mower deck is level before matching the height of cut (HOC).

1. Position the mower on a flat surface.
2. Disengage the blade-control switch (PTO), move the motion-control levers to the NEUTRAL-LOCK position, and engage the parking brake.
3. Shut off the engine, remove the key, and wait for all moving parts to stop before leaving the operating position.
4. Check tire pressure of the drive tires.
5. If needed, adjust to 90 kPa (13 psi).
6. Position the mower to the 76 mm (3 inches) height-of-cut position.

Leveling the Deck

1. Position the mower on a flat surface.
2. Stop engine, wait for all moving parts to stop, remove the key, and engage the parking brake.
3. Check the tire pressure in the drive tires.

   Note: Proper inflation pressure for the tires is 90 kPa (13 psi).
4. Position the transport lock in the latching position.
5. Push the deck-lift pedal all the way forward and the deck latches at the 14 cm (5-1/2 inches) transport position (Figure 95).

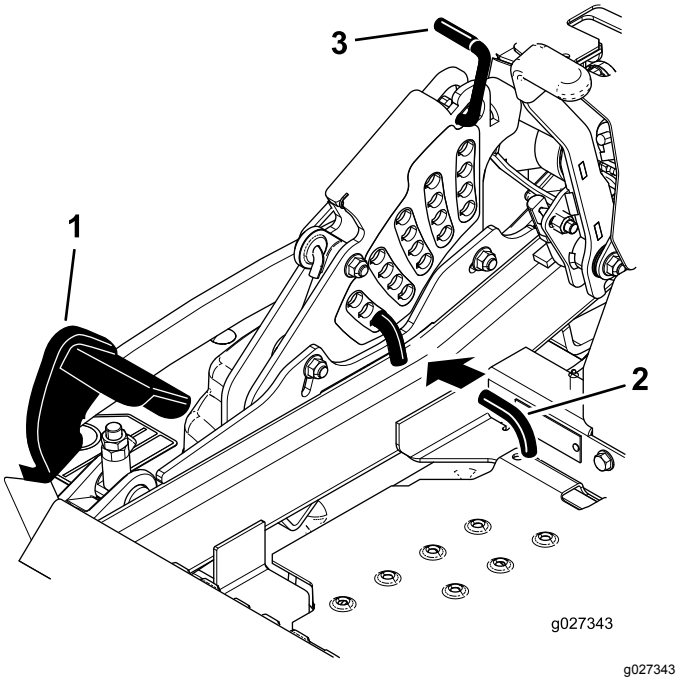

Figure 95

1. Deck-lift pedal
2. Height-of-cut pin
3. Transport lock

6. Insert the height-adjustment pin into the 7.6 cm (3 inches) cutting-height location.
7. Release the transport lock and allow the deck to lower to the cutting height.
8. Raise the discharge chute.
9. On both sides of the deck, measure from the level surface to the front tip of the blade (Postion A) as shown in Figure 96.

   Note: The measurement should read 7.6 mm (3 inches)

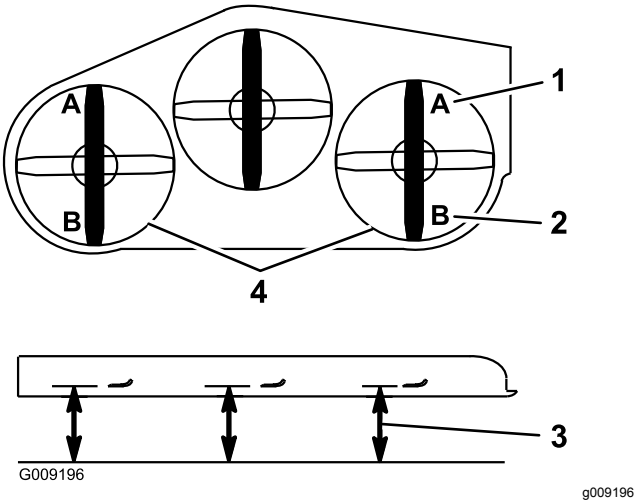

Figure 96

1. 7.6 cm (3 inch) at position A is correct
2. 8.3 cm (3-1/4 inch) at position B is correct
3. Measure here from the blade tip to the hard surface
4. Measure at position A and B on both sides

10. Fine-tune the adjustment nut on the front deck lift assembly by turning it (Figure 97).

    Note: To increase the height, turn the adjustment nut clockwise; to decrease, turn counterclockwise.

    Note: If the front deck links do not have enough adjustment to achieve accurate cut height, the single-point adjustment can be utilized to gain more adjustment.

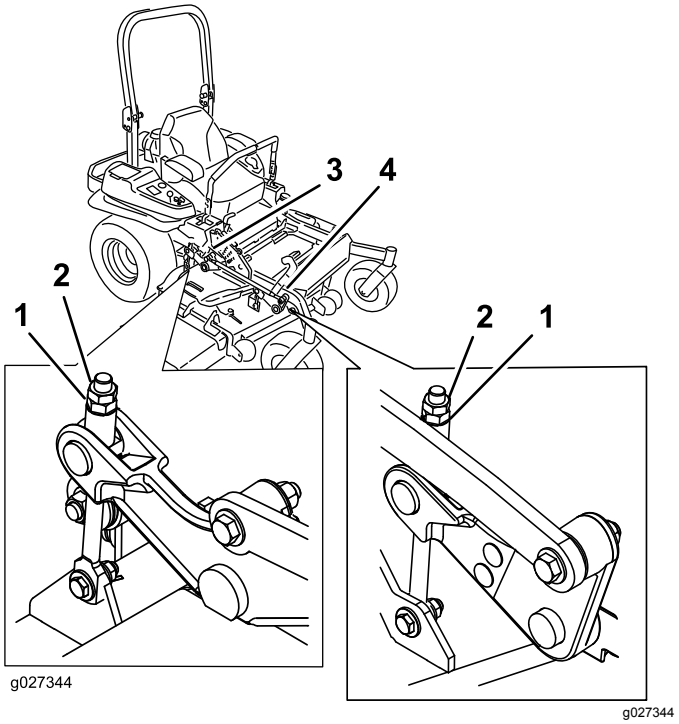

Figure 97

1. Adjustment nut
2. Jam nut
3. Rear deck adjustment
4. Front deck adjustment

11. To adjust the single-point system, loosen the 2 bolts at the bottom of the height-of-cut plate (Figure 98).

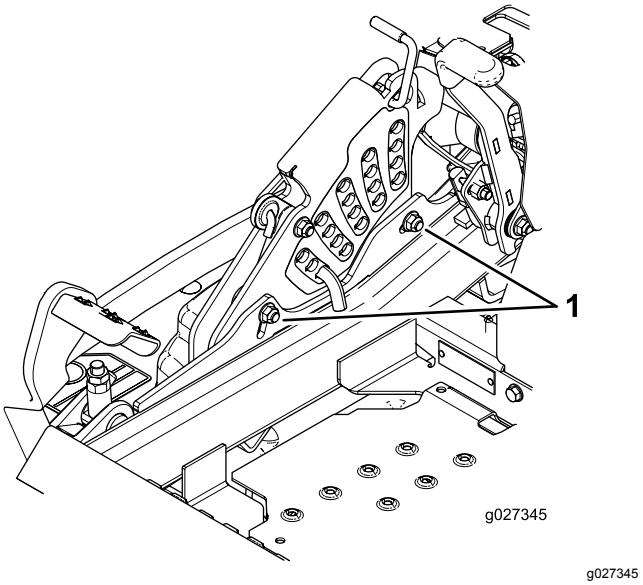

Figure 98

1. Bolts at the bottom of the height-of-cut plate

12. If the deck is too low, tighten the single-point-adjustment bolt by rotating it clockwise. If the deck is too high, loosen the single-point-adjustment bolt by rotating it counterclockwise (Figure 99).

Note: Loosen or tighten the single-point adjustment bolt enough to move the height-of-cut plate mounting bolts at least 1/3 the length of the available travel in their slots. This regains some up and down adjustment on each of the 4 deck links.

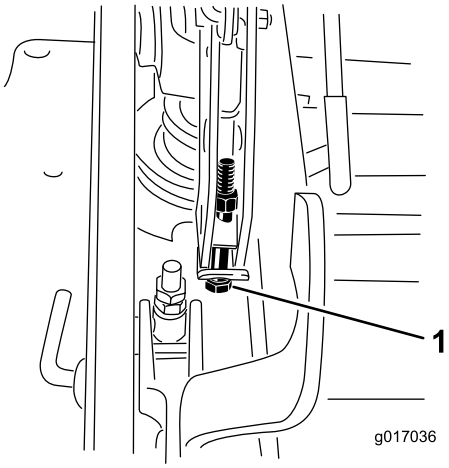

g017036

Figure 99

1. Single-point adjustment bolt

---

13. Tighten the 2 bolts at the bottom of the height-of-cut plate (Figure 98).

    Note: In most conditions, the back blade tip should be adjusted 6.4 mm (1/4 inch) higher than the front.

14. Torque the 2 bolts to 37 to 45 N·m (27 to 33 ft-lb).
15. On both sides of the deck, measure from the level surface to the back tip of the blade (postion B) as shown in Figure 96.

    Note: The measurement should read 8.3 cm (3-1/4 inches)

16. Fine tune the screw adjuster by turning it to get 8.3 mm (3-1/4 inches) height (Figure 97).

    To increase the height, turn the adjustment nut clockwise; to decrease, turn counterclockwise.

17. Measure until all 4 sides are the correct height.
18. Tighten all of the nuts on the deck-lift-arm assemblies.
19. Lower the discharge chute.

Servicing the Cutting Blades

To ensure a superior quality of cut, keep the blades sharp. For convenient sharpening and replacement, you may want to keep extra blades on hand.

Blade Safety

A worn or damaged blade can break, and a piece of the blade could be thrown toward you or bystanders, resulting in serious personal injury or death. Trying to repair a damaged blade may result in discontinued safety certification of the product.

- Inspect the blades periodically for wear or damage.
- Use care when checking the blades. Wrap the blades or wear gloves, and use caution when servicing the blades. Only replace or sharpen the blades; never straighten or weld them.
- On multi-bladed machines, take care as rotating 1 blade can cause other blades to rotate.

Before Inspecting or Servicing the Blades

1. Park the machine on a level surface, disengage the blade-control switch (PTO), and engage the parking brake.
2. Shut off the engine, remove the key, and disconnect the spark-plug wires from the spark plugs.

Inspecting the Blades

Service Interval: Before each use or daily

1. Inspect the cutting edges (Figure 100).
2. If the edges are not sharp or have nicks, remove and sharpen the blade; refer to Sharpening the Blades (page 69).
3. Inspect the blades, especially in the curved area.
4. If you notice any cracks, wear, or a slot forming in this area, immediately install a new blade (Figure 100).

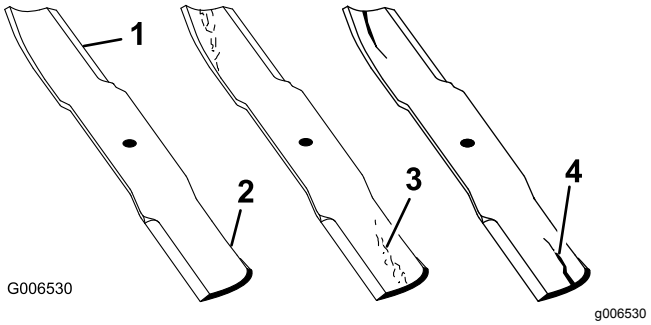

Figure 100

1. Cutting edge
2. Curved area
3. Wear/slot forming
4. Crack

Checking for Bent Blades

1. Disengage the blade-control switch (PTO), move the motion-control levers to the NEUTRAL-LOCK position, and engage the parking brake.
2. Shut off the engine, remove the key, and wait for all moving parts to stop before leaving the operating position.
3. Rotate the blades until the ends face forward and backward.
4. Measure from a level surface to the cutting edge, position **A**, of the blades (Figure 101).

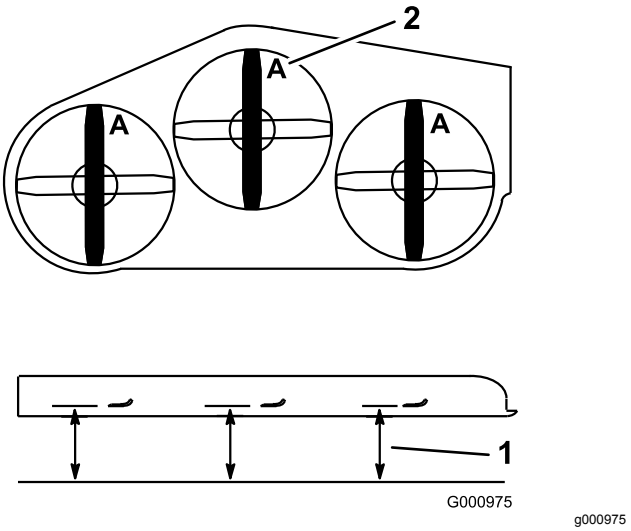

Figure 101

1. Measure here from blade to hard surface
2. Position A

5. Rotate the opposite ends of the blades forward.
6. Measure from a level surface to the cutting edge of the blades at the same position as in step 4 above.

Note: The difference between the dimensions obtained in steps 4 and 6 must not exceed 3 mm (1/8 inch).

Note: If this dimension exceeds 3 mm (1/8 inch), the blade is bent and must be replaced.

⚠ WARNING

A blade that is bent or damaged could break apart and could seriously injure or kill you or bystanders.

- **Always replace a bent or damaged blade with a new blade.**
- **Do not file or create sharp notches in the edges or surfaces of the blade.**

Removing the Blades

Blades must be replaced if a solid object is hit, if the blade is out of balance, or if the blade is bent. To ensure optimum performance and continued safety conformance of the machine, use genuine Toro replacement blades. Replacement blades made by other manufacturers may result in nonconformance with safety standards.

1. Hold the blade end using a rag or a thickly-padded glove.
2. Remove the blade bolt, the curved washer, and the blade from the spindle shaft (Figure 102).

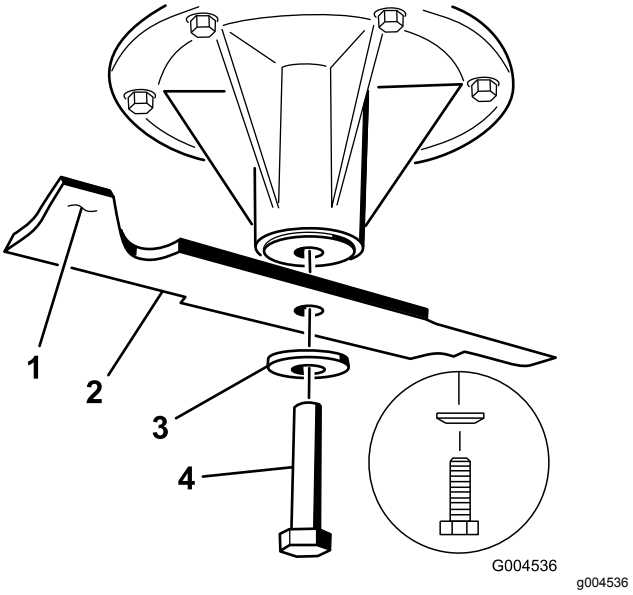

Figure 102

1. Sail area of the blade
2. Blade
3. Curved washer
4. Blade bolt

Sharpening the Blades

1. Use a file to sharpen the cutting edge at both ends of the blade (Figure 103).

Note: Maintain the original angle.

Note: The blade retains its balance if the same amount of material is removed from both cutting edges.

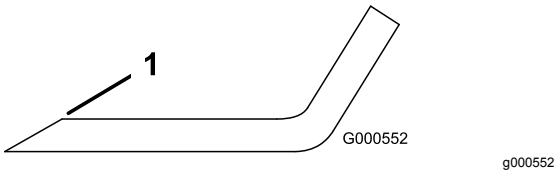

Figure 103

1. Sharpen at original angle.

2. Check the balance of the blade by putting it on a blade balancer (Figure 104).

Note: If the blade stays in a horizontal position, the blade is balanced and can be used.

Note: If the blade is not balanced, file some metal off the end of the sail area only (Figure 103).

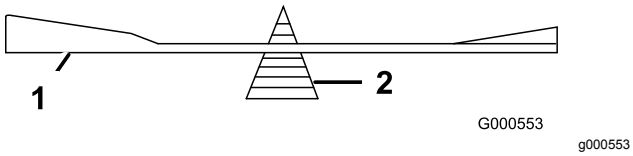

Figure 104

1. Blade
2. Balancer

3. Repeat this procedure until the blade is balanced.

Installing the Blades

1. Install the blade onto the spindle shaft (Figure 105).

   Important: **The curved part of the blade must be pointing upward toward the inside of the mower to ensure proper cutting.**

2. Install the spring disk and blade bolt (Figure 105).

   Note: The spring-disk cone must be installed toward the bolt head (Figure 105).

3. Torque the blade bolt to 115 to 150 N·m (85 to 110 ft-lb).

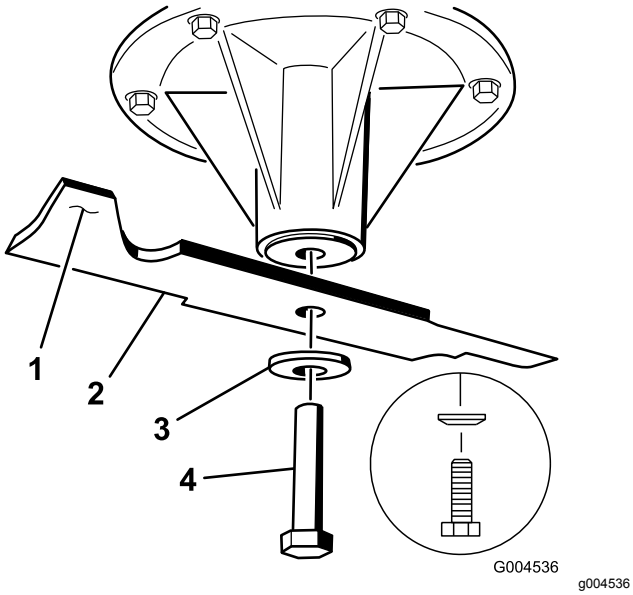

Figure 105

1. Sail area of the blade
2. Blade
3. Spring disk
4. Blade bolt

Removing the Mower Deck

Before servicing or removing the mower deck, lock out the spring-loaded deck arms.

⚠ WARNING

Deck-lift-arm assemblies have stored energy. Removing the deck without releasing the stored energy can cause serious injury or death.

Do not attempt to disassemble the deck from the front frame without locking out the stored energy.

1. Shut off the engine, wait for all moving parts to stop, remove the key, and engage the parking brake.
2. Remove the height-adjustment pin and lower the deck to the ground.
3. Place the height-adjustment pin in the 7.6 cm (3 inch) cutting-height location.

   Note: This locks the deck-lift arms in the lowest position when the deck is removed and the stored energy in the deck spring is released.

4. Remove the belt covers.
5. Lift up the floor pan and insert a ratchet into the square hole in the deck idler (Figure 106).
6. Rotate the deck idler clockwise and remove the mower belt (Figure 106).

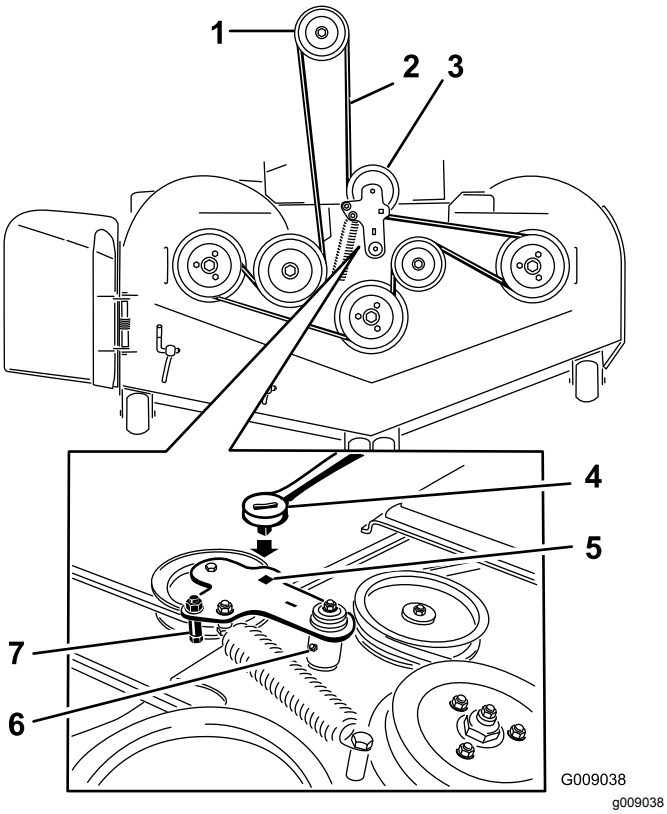

Figure 106

1. Clutch pulley
2. Mower belt
3. Spring-loaded idler pulley
4. Ratchet
5. Square hole in the idler arm for the ratchet
6. Idler grease fitting
7. Belt guide

7. Remove and retain the hardware on both sides of the deck (Figure 107).

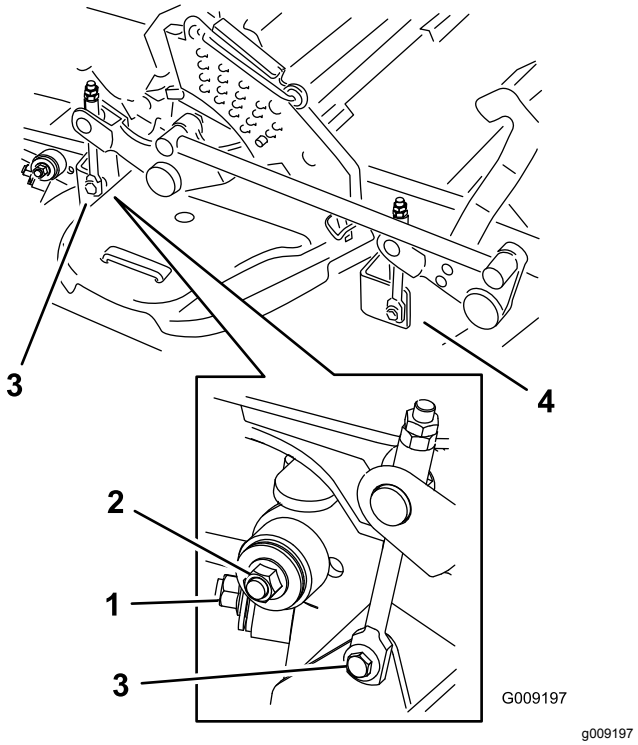

Figure 107

1. Right stabilizer
2. Deck strut (right side shown)
3. Remove the shoulder bolt and nut.
4. Remove the shoulder bolt and nut.

8. Raise the deck struts and secure them in the up position.
9. Slide the deck out to the right side of the machine.

Replacing the Grass Deflector

⚠ WARNING

An uncovered discharge opening could allow the lawn mower to throw objects at you or bystanders, resulting in serious injury. Also, contact with the blade could occur.

Do not operate the lawn mower unless you install a cover plate, a mulch plate, grass deflector or bagger.

1. Remove the locknut, the bolt, the spring, and the spacer holding the deflector to the pivot brackets (Figure 108).
2. Remove the damaged or worn grass deflector (Figure 108).

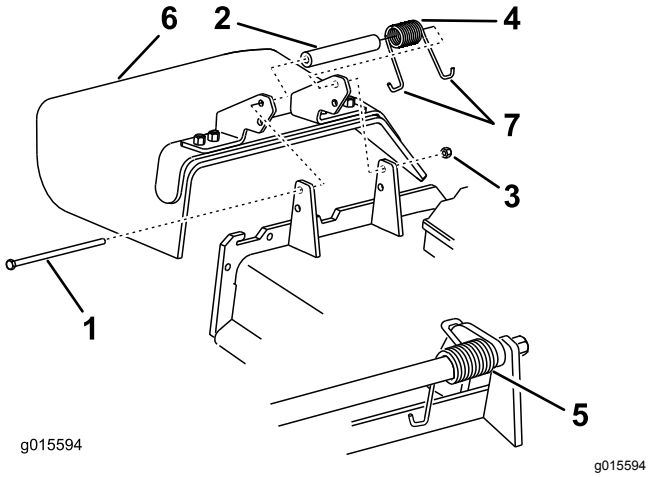

Figure 108

1. Bolt
2. Spacer
3. Locknut
4. Spring
5. Spring installed
6. Grass deflector
7. J-hook end of spring

3. Place the spacer and the spring onto grass deflector.
4. Place the J-end of the spring behind the deck edge.

   Note: Make sure that the J-end of the spring is installed behind the deck edge before installing the bolt as shown in Figure 108.
5. Install the bolt and the nut.
6. Place the J-hook end of the spring around the grass deflector (Figure 108).

   Important: **The grass deflector must be able to rotate. Lift the deflector up to the full open position and ensure that it rotates into the full down position.**

Cleaning

Cleaning under the Mower

Service Interval: Before each use or daily

1. Disengage the blade-control switch (PTO), move the motion-control levers to the NEUTRAL-LOCK position, and engage the parking brake.
2. Shut off the engine, remove the key, and wait for all moving parts to stop before leaving the operating position.
3. Raise the mower to the transport position.

Disposing of Waste

Engine oil, batteries, hydraulic fluid, and engine coolant are pollutants to the environment. Dispose of these according to your state and local regulations.

Storage

Cleaning and Storing the Machine

1. Disengage the blade-control switch (PTO), engage the parking brake, turn the ignition key to the OFF position, and remove the key.
2. Remove grass clippings, dirt, and grime from the external parts of the entire machine (especially the engine and hydraulic system). Clean dirt and chaff from the outside of the engine-cylinder-head fins and the blower housing.

   Important: **You can wash the machine with mild detergent and water. Do not pressure-wash the machine. Avoid excessive use of water, especially near the control panel, engine, hydraulic pumps, and motors.**
3. Check the brake; refer to Brake Maintenance (page 57).
4. Service the air cleaner; refer to Servicing the Air Cleaner (page 42).
5. Grease the machine; refer to Lubrication (page 39).
6. Change the crankcase oil; refer to Changing the Engine Oil (page 44).
7. Check the tire pressure; refer to Checking the Tire Pressure (page 51).
8. Change the hydraulic filters; refer to Replacing the Hydraulic Fluid and Filters (page 63).
9. Charge the battery; refer to Charging the Battery (page 49).
10. Scrape any heavy buildup of grass and dirt from the underside of the mower, then wash the mower with a garden hose.

    Note: Run the machine with the blade-control switch (PTO) engaged and the engine at high idle for 2 to 5 minutes after washing.
11. Check the condition of the blades; refer to Servicing the Cutting Blades (page 68).
12. Prepare the machine for storage when non-use occurs over 30 days. Prepare the machine for storage as follows:

    A. Add a petroleum based stabilizer/conditioner to fuel in the tank. Follow mixing instructions from the stabilizer manufacturer. Do not use an alcohol based stabilizer (ethanol or methanol).

    Note: A fuel stabilizer/conditioner is most effective when mixed with fresh fuel and used at all times.

    B. Run the engine to distribute conditioned fuel through the fuel system (5 minutes).

    C. Shut off the engine, allow it to cool, and drain the fuel tank; refer to Servicing the Fuel Tank (page 48).

    D. Start the engine and run it until it stops.

    E. Dispose of fuel properly. Recycle as per local codes.

    Important: **Do not store stabilizer/conditioned fuel over 90 days.**
13. Check and tighten all bolts, nuts, and screws. Repair or replace any part that is damaged.
14. Paint all scratched or bare metal surfaces. Paint is available from your Authorized Service Dealer.
15. Store the machine in a clean, dry garage or storage area.
16. Remove the key from the ignition switch and keep it out of reach of children or other unauthorized users.
17. Cover the machine to protect it and keep it clean.

Troubleshooting

Problem	Possible Cause	Corrective Action
The starter does not crank.	1. The blade-control switch (PTO) is engaged. 2. The parking brake is disengaged. 3. The motion-control levers are not in the NEUTRAL-LOCK position. 4. The operator is not seated. 5. The battery is dead. 6. The electrical connections are corroded or loose. 7. The fuse is blown. 8. The relay or switch is worn or damaged.	1. Move the blade-control switch (PTO) to the disengaged position. 2. Engage the parking brake. 3. Ensure that the motion-control levers are in the NEUTRAL-LOCK position. 4. Sit on the seat. 5. Charge the battery. 6. Check the electrical connections for good contact. 7. Replace the fuse. 8. Contact an Authorized Service Dealer.
The engine does not start, starts hard, or fails to keep running.	1. The fuel tank is empty. 2. The fuel-shutoff valve is closed. 3. The oil level in the crankcase is low. 4. The throttle is not in the correct position. 5. There is dirt in the fuel filter. 6. There is dirt, water, or stale fuel in the fuel system. 7. The air cleaner is dirty. 8. The seat switch is not functioning properly. 9. The electrical connections are corroded, loose, or damaged. 10. The relay or switch is worn or damaged. 11. The spark plug is fouled or improperly gapped. 12. The spark-plug wire is not connected.	1. Fill the fuel tank. 2. Open the fuel-shutoff valve. 3. Add oil to the crankcase. 4. Be sure that the throttle control is midway between the slow and fast positions. 5. Replace the fuel filter. 6. Contact an Authorized Service Dealer. 7. Clean or replace the air-cleaner element. 8. Check the seat-switch indicator. Replace the seat if necessary. 9. Check the electrical connections for good contact. Clean the connector terminals thoroughly with electrical-contact cleaner, apply dielectric grease, and make the appropriate connections. 10. Contact an Authorized Service Dealer. 11. Adjust or replace the spark plug. 12. Check the spark-plug wire connection.
The engine loses power.	1. The engine load is excessive. 2. The air cleaner is dirty. 3. The oil level in the crankcase is low. 4. The cooling fins and the air passages above the engine are plugged. 5. The vent hole in the fuel cap is plugged. 6. There is dirt in the fuel filter. 7. There is dirt, water, or stale fuel in the fuel system.	1. Reduce the ground speed. 2. Clean the air-cleaner element. 3. Add oil to the crankcase. 4. Remove the obstruction from the cooling fins and the air passages. 5. Clean or replace the fuel cap. 6. Replace the fuel filter. 7. Contact an Authorized Service Dealer.
The engine overheats.	1. The engine load is excessive. 2. The oil level in the crankcase is low. 3. The cooling fins and the air passages above the engine are plugged.	1. Reduce the ground speed. 2. Add oil to the crankcase. 3. Remove the obstruction from the cooling fins and the air passages.
The mower pulls to the left or right (with levers fully forward)	1. The tracking needs adjustment 2. The tire pressure in the drive tires is not correct.	1. Adjust the tracking. 2. Adjust the tire pressure in the drive tires.

Problem	Possible Cause	Corrective Action
The machine does not drive.	1. The bypass valves are not closed tight. 2. The pump belt is worn, loose, or broken. 3. The pump belt is off a pulley. 4. The idler spring is broken or missing. 5. The hydraulic-fluid level is low or too hot.	1. Tighten the bypass valves. 2. Change the belt. 3. Change the belt. 4. Replace the spring. 5. Add hydraulic fluid to the reservoirs or let it cool down.
The machine vibrates abnormally.	1. The cutting blade(s) is/are bent or unbalanced. 2. The blade mounting bolt is loose. 3. The engine mounting bolts are loose. 4. The engine pulley, idler pulley, or blade pulley is loose. 5. The engine pulley is damaged. 6. The blade spindle is bent. 7. The motor mount is loose or worn.	1. Install new cutting blade(s). 2. Tighten the blade mounting bolt. 3. Tighten the engine mounting bolts. 4. Tighten the appropriate pulley. 5. Contact an Authorized Service Dealer. 6. Contact an Authorized Service Dealer. 7. Contact an Authorized Service Dealer.
The machine produces an uneven cutting height.	1. The blade(s) is/are not sharp. 2. The cutting blade(s) is/are bent. 3. The mower deck is not level. 4. The underside of mower is dirty. 5. The tire pressure is not correct. 6. The blade spindle is bent.	1. Sharpen the blade(s). 2. Install new cutting blade(s). 3. Level the mower deck from side-to-side and front-to-rear. 4. Clean the underside of the mower. 5. Adjust the tire pressure. 6. Contact an Authorized Service Dealer.
The blades do not rotate.	1. The mower deck belt is worn, loose, or broken. 2. The mower deck belt is off pulley. 3. The pump drive belt is worn, loose, or broken. 4. The idler spring is broken or missing.	1. Install a new deck belt. 2. Install the mower deck pulley and check the idler pulley, idler arm, and spring for correct position and function. 3. Check the belt tension or install a new belt. 4. Replace the spring.
The clutch does not engage.	1. The fuse is blown. 2. There is low voltage supply at the clutch. 3. The coil is damaged. 4. There is inadequate current supply. 5. The rotor/armature air gap is too large.	1. Replace the fuse. Check the coil resistance, battery charge, charging system, and wiring connections, and replace components if necessary. 2. Check the coil resistance, battery charge, charging system, and wiring connections and replace parts if necessary. 3. Replace the clutch. 4. Repair or replace the clutch lead wire or electrical system. Clean the connector contacts. 5. Remove the shim or replace the clutch.

Schematics

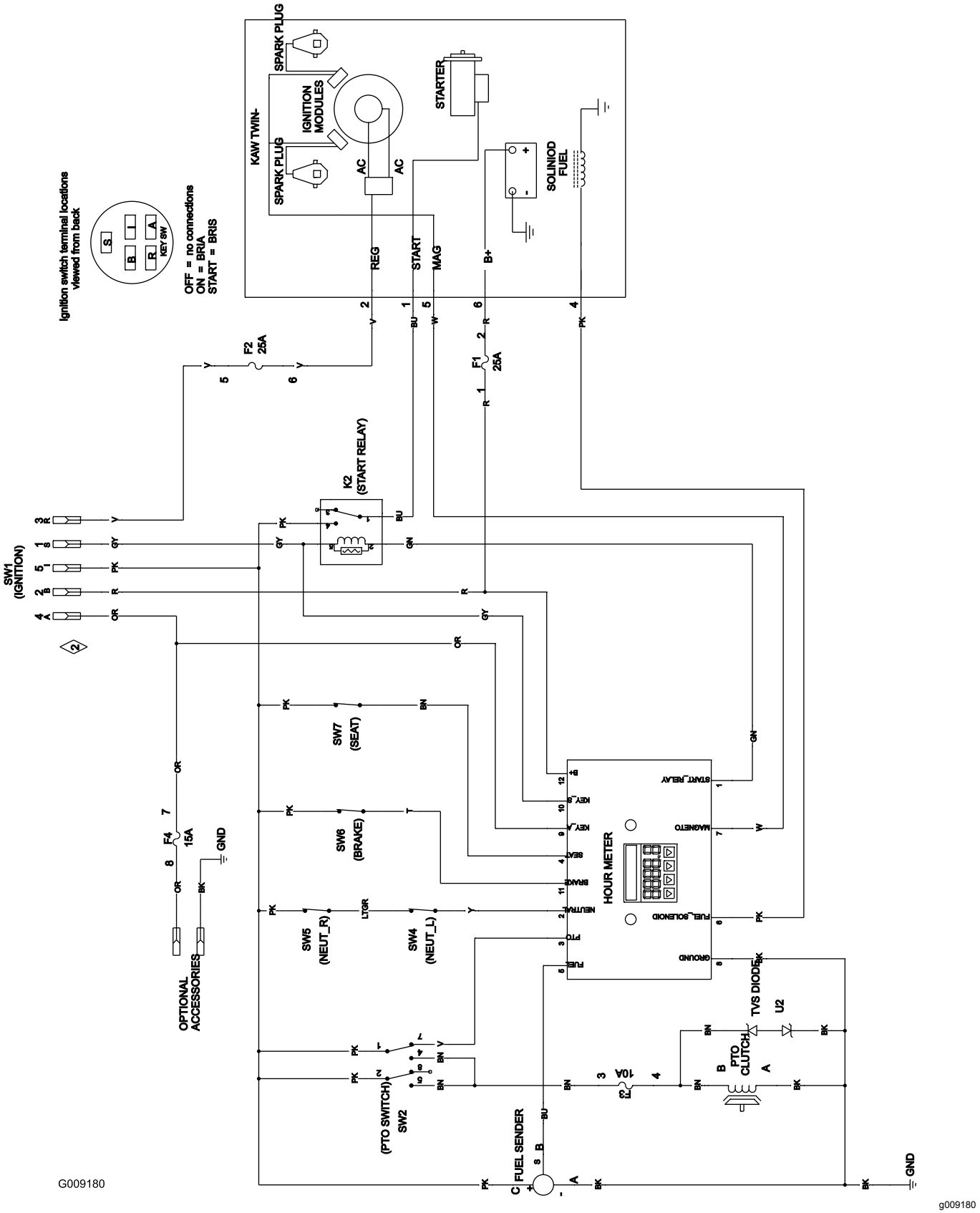

Wire Diagram (Rev. A)

Notes:

Notes:

European Privacy Notice

The Information Toro Collects
Toro Warranty Company (Toro) respects your privacy. In order to process your warranty claim and contact you in the event of a product recall, we ask you to share certain personal information with us, either directly or through your local Toro company or dealer.

The Toro warranty system is hosted on servers located within the United States where privacy law may not provide the same protection as applies in your country.

BY SHARING YOUR PERSONAL INFORMATION WITH US, YOU ARE CONSENTING TO THE PROCESSING OF YOUR PERSONAL INFORMATION AS DESCRIBED IN THIS PRIVACY NOTICE.

The Way Toro Uses Information
Toro may use your personal information to process warranty claims, to contact you in the event of a product recall and for any other purpose which we tell you about. Toro may share your information with Toro's affiliates, dealers or other business partners in connection with any of these activities. We will not sell your personal information to any other company. We reserve the right to disclose personal information in order to comply with applicable laws and with requests by the appropriate authorities, to operate our systems properly or for our own protection or that of other users.

Retention of your Personal Information
We will keep your personal information as long as we need it for the purposes for which it was originally collected or for other legitimate purposes (such as regulatory compliance), or as required by applicable law.

Toro's Commitment to Security of Your Personal Information
We take reasonable precautions in order to protect the security of your personal information. We also take steps to maintain the accuracy and current status of personal information.

Access and Correction of your Personal Information
If you would like to review or correct your personal information, please contact us by email at legal@toro.com.

Australian Consumer Law

Australian customers will find details relating to the Australian Consumer Law either inside the box or at your local Toro Dealer.

The Toro Warranty

Landscape
Contractor
Equipment (LCE)

Conditions and Products Covered

The Toro Company and its affiliate, Toro Warranty Company, pursuant to an agreement between them, jointly promise to repair the Toro Products listed below if defective in materials or workmanship.

The following time periods apply from the original date of purchase:

Products	Warranty Period
Walk Behind Mowers	
53 cm & 76 cm Mowers – Residential use[1]	2 years
53 cm & 76 cm Mowers – Commercial use	1 year
• Engine	2 years [2]
Mid-Size Walk-Behind Mowers	2 years
• Engine	2 years[2]
Grand Stand® Mowers	5 years or 1,200 hours[3]
• Engine	3 years
Z Master® 6000 Series Mowers	5 years or 1,200 hours[3]
• Engine	3 years[2]
Z Master® 7000 Series Mowers	5 years or 1,200 hours[3]
• Engine	2 years[2]
Z Master® 8000 Series Mowers	2 years
• Engine	3 years[2]
Titan HD Mower and Engine	4 years or 500 hours[3]
All Mowers	
• Battery	2 years
• Attachments	2 years

[1]Residential use means use of the product on the same lot as your home. Use at more than one location is considered commercial use and the commercial warranty would apply.

[2]Some engines used on Toro LCE Products are warranted by the engine manufacturer.

[3]Whichever occurs first.

This warranty includes the cost of parts and labor, but you must pay transportation costs.

Instructions for Obtaining Warranty Service

If you think that your Toro Product contains a defect in materials or workmanship, follow this procedure:

1. Contact your seller to arrange service of the product. If for any reason it is impossible for you to contact your seller, you may contact any Toro Authorized Distributor to arrange service. Visit http://www.toro.com/ to locate a Toro distributor in your area.
2. Bring the product and your proof of purchase (sales receipt) to the Service Dealer.
3. If for any reason you are dissatisfied with the Service Dealer's analysis or with the assistance provided, contact us at:

   Toro Warranty Company
   8111 Lyndale Avenue South
   Bloomington, MN 55420-1196
   001-952-948-4707

Owner Responsibilities

You must maintain your Toro Product by following the maintenance procedures described in the *Operator's Manual*. Such routine maintenance, whether performed by a dealer or by you, is at your expense.

Items and Conditions Not Covered

There is no other express warranty except for special emission system coverage and engine warranty coverage on some products. This express warranty does not cover the following:

- Cost of regular maintenance service or parts, such as filters, fuel, lubricants, oil changes, spark plugs, air filters, blade sharpening or worn blades, cable/linkage adjustments, or brake and clutch adjustments
- Components failing due to normal wear
- Any product or part which has been altered or misused or neglected or requires replacement or repair due to accidents or lack of proper maintenance
- Pickup and delivery charges
- Repairs or attempted repairs by anyone other than an Authorized Toro Service Dealer
- Repairs necessary due to failure to follow recommended fuel procedure (consult the *Operator's Manual* for more details)
  - Removing contaminants from the fuel system is not covered
  - Use of old fuel (more than one month old) or fuel which contains more than 10% ethanol or more that 15% MTBE
  - Failure to drain the fuel system prior to any period of non-use over one month

General Conditions

The purchaser is covered by the national laws of each country. The rights to which the purchaser is entitled with the support of these laws are not restricted by this warranty.