Form No. 3409-677 Rev C

TORO®

Count on it.

Parts Catalog

Multi Pro® 5800-G Turf Sprayer

with ExcelaRate Spray System

Model No. 41394—Serial No. 400000000 and Up

Register at www.Toro.com.
Original Instructions (EN)

3409-677 C

Ordering Replacement Parts

To order replacement parts, please supply the part number, the quantity, and the description of each part desired.

Understanding Reference Numbers

Each identified part in an illustration has a reference number. The reference number for a part also appears in the parts list, along with other information about the part.

This catalog uses two special reference number formats, one to indicate parts in a service assembly and another to indicate the quantity of a given part in an illustration.

Service Assembly Reference Numbers

Parts in service assemblies have reference numbers in the form a:b. The a represents the reference number of the entire service assembly and the b represents a sequential number unique to each part within the service assembly.

For example, a wheel assembly might be identified by reference number 6, the tire by 6:1, the valve by 6:2, and the wheel by 6:3. When you order the assembly identified by reference number 6, you receive all parts identified by reference numbers 6:1,6:2, and 6:3. However, you may also order any part individually. Reference numbers of this type appear in illustration and in parts lists.

Reference Numbers Indicating Quantity

In an illustration, if a reference number indicates more than one part, the reference number has the form nX y. The n represents the quantity of the part, the X is the multiplication symbol, and the y represents the reference number.

For example, in an illustration, the reference number 2X 37 means that two of the parts identified by reference number 37 are indicated.

Contents

Frame and Step Assembly . . . 5
Front Axle Assembly . . . 6
Hydraulic Cylinder Assembly No. 93-6510 . . . 8
Hub Assembly No. 119-6003 . . . 9
Front Suspension Assembly . . . 10
Seat Base Assembly . . . 11
Seat, Fresh Water Tank and Roll-Over Protection System Assembly . . . 12
Control Console Assembly . . . 14
Brake Pedal Assembly . . . 15
Traction Pedal Assembly . . . 16
Throttle Assembly . . . 17
Dash Panel Assembly . . . 18
Hood and Fender Assembly . . . 19
Engine Mounting and Bell Housing Assembly . . . 20
Muffler and Air Cleaner Assembly . . . 21
Air Cleaner Assembly No. 106-5277 . . . 23
Engine and Shroud Assembly . . . 24
Fuel Tank Assembly . . . 25
Radiator Assembly . . . 26
Hydraulic Pump and Filter Assembly . . . 28
Piston Pump Assembly No. 117-0685 . . . 30
Control Assembly No. 115-4446 . . . 32
Tandem Pump Assembly No. 119-5038 . . . 33
Hydraulic Tank Assembly . . . 34
Hydraulic Pump and Filter Assembly . . . 35
Pump Control Valve Assembly No. 117-0708 . . . 37
Steering Hydraulic Assembly . . . 38
Steer Valve Assembly No. 117-0707 . . . 39
Boom Lift Assembly . . . 40
Hydraulic Cylinder Assembly No. 117-0701 . . . 41
On-Off Boom Lift Valve No. 117-0702 . . . 42
Rear Drive Assembly . . . 43
Planetary Assembly No. 105-4500 . . . 45
RH Brake Assembly No. 100-3069 . . . 46
LH Brake Assembly No. 100-3070 . . . 47
Hydraulic Motor Assembly No. 132-5631 . . . 48
Hydraulic Motor Assembly No. 132-5630 . . . 49
Electrical Assembly . . . 50
Tank and Saddle Assembly . . . 51
Tank Assembly No. 117-8005 . . . 52
Spray Tank Lid Assembly No. 119-9380 . . . 53
Bypass Hose Assembly No. 132-4297 . . . 54
Tank Mounting and Filter Assembly . . . 55
Filter Assembly No. 130-7096 . . . 56
Spray System Hose Assembly . . . 57
Spray Pump and Valve Assembly . . . 59
On/Off 2-Way Valve Kit No. 131-0249 . . . 61
Spray Manifold Assembly . . . 62
Manifold Valve Kit No. 131-7256 . . . 63
Manifold Valve Kit No. 131-0253 . . . 64
Pressure Filter Assembly No. 131-3791 . . . 65
On/Off Manifold Valve Kit No. 127-9803 . . . 66
On/Off Actuator Kit No. 131-3723 . . . 67
Bypass Valve Assembly No. 127-9805 . . . 68

© 2018—The Toro® Company

8111 Lyndale Avenue South
Bloomington, MN 55420

Contact us at www.Toro.com.
Printed in the USA.

All Rights Reserved

Contents (continued)

Pump Assembly No. 132-7768 . . . 69
Agitation Hose Assembly No. 132-4309 . . . 70
Hydraulic Motor Assembly No. 117-0706 . . . 71
Flow Meter Assembly No. 106-1038 . . . 72
Center Boom Assembly . . . 73
Left and Right Hand Boom Assembly . . . 75
RH Single Body Turret Assembly No. 108-3726 . . . 76
Double Turret Body Assembly No. 108-3727 . . . 77
LH Single Turret Body Assembly No. 108-3725 . . . 78
Crankcase Assembly . . . 79
Oil Pan Assembly . . . 80
Cylinder Head Assembly . . . 81
Gear Case and Oil Filter Cartridge Assembly . . . 82
Cylinder Head Cover Assembly . . . 83
Oil Dipstick and Guide Assembly . . . 84
Main Bearing Case Assembly . . . 85
Cam Shaft and Idle Gear Assembly . . . 86
Piston and Crankshaft Assembly . . . 87
Flywheel and Sensor Switch Assembly . . . 88
Ignition Coil and Delivery Pipe Assembly . . . 89
Engine Covers Assembly . . . 90
Solenoid Cover and Hydraulic Pump Cover . . . 91
Alternator, Pulley and Fan Assembly . . . 92
Alternator Components . . . 93
Starter Installation Assembly . . . 94
Starter Components Assembly . . . 95
Water Flange and Thermostat Assembly . . . 96
Water Pump Assembly . . . 97
Valve and Rocker Arm Assembly . . . 98
Inlet Manifold Assembly . . . 99
Exhaust Manifold Assembly . . . 100
Wire Harness Assembly . . . 101
Electronic Control Unit Assembly . . . 102
Miscellaneous Engine Parts . . . 103
Attachments and Accessories . . . 104

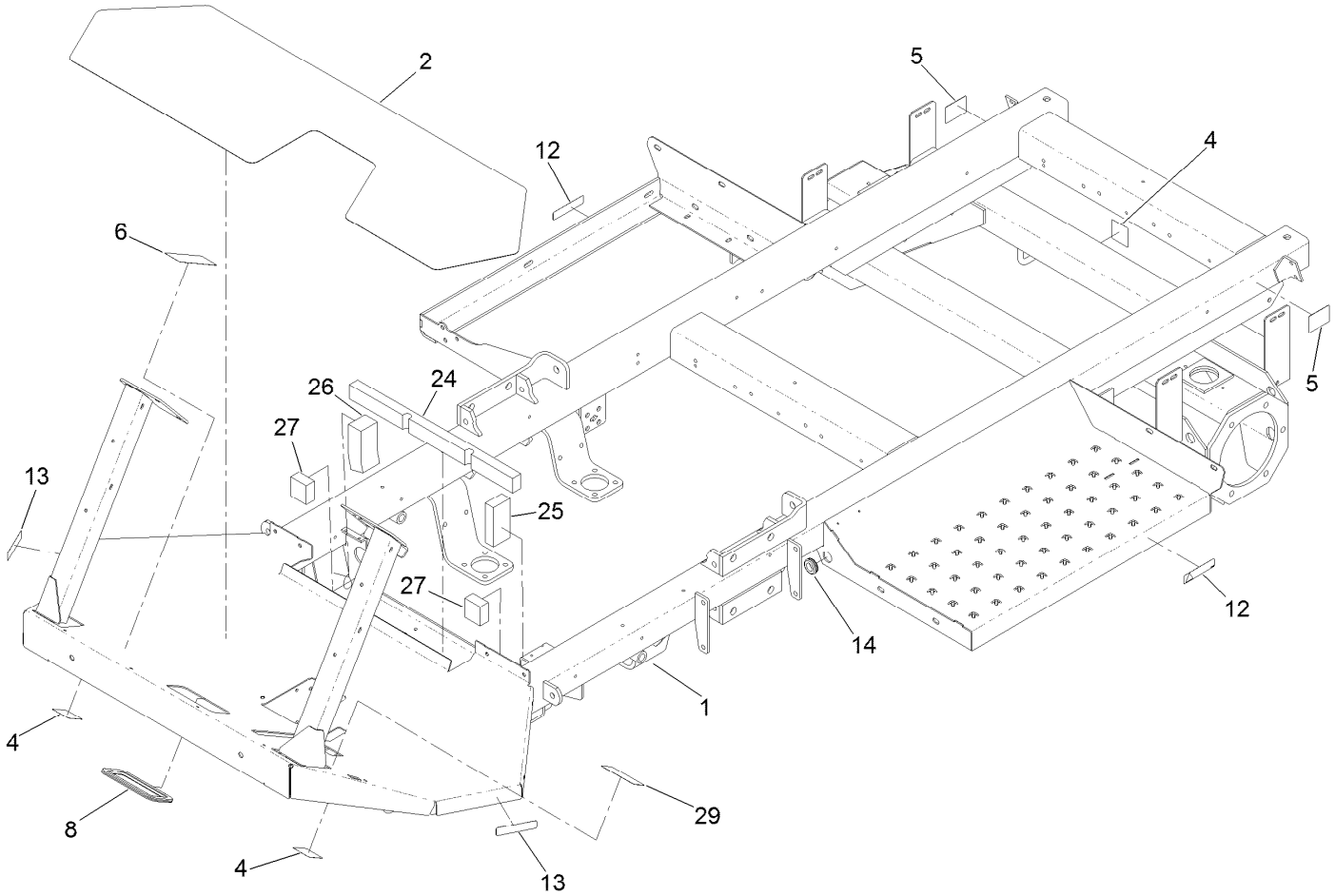

Frame and Step Assembly

Ref.	*Part Number*	*Qty.*	*Description*
1	130-7070-03	1	Frame
2	104-8863	1	Tread-Floor
4	120-0623	3	Decal-Tie Down, Towing
5	107-8667	2	Decal-Jacking
6	107-8724	1	Decal-Traction
8	119-0599	1	Trim-Seal
12	107-8732	2	Decal-Torque (CE)
13	107-8731	2	Decal-Torque (CE)
14	240-6	1	Grommet-Rubber
24	131-5751	1	Foam-Seal
25	131-5752	1	Foam-Seal
26	131-5753	1	Foam-Seal
27	131-5754	2	Foam-Seal
29	136-2351	1	Decal-Brake, Parking

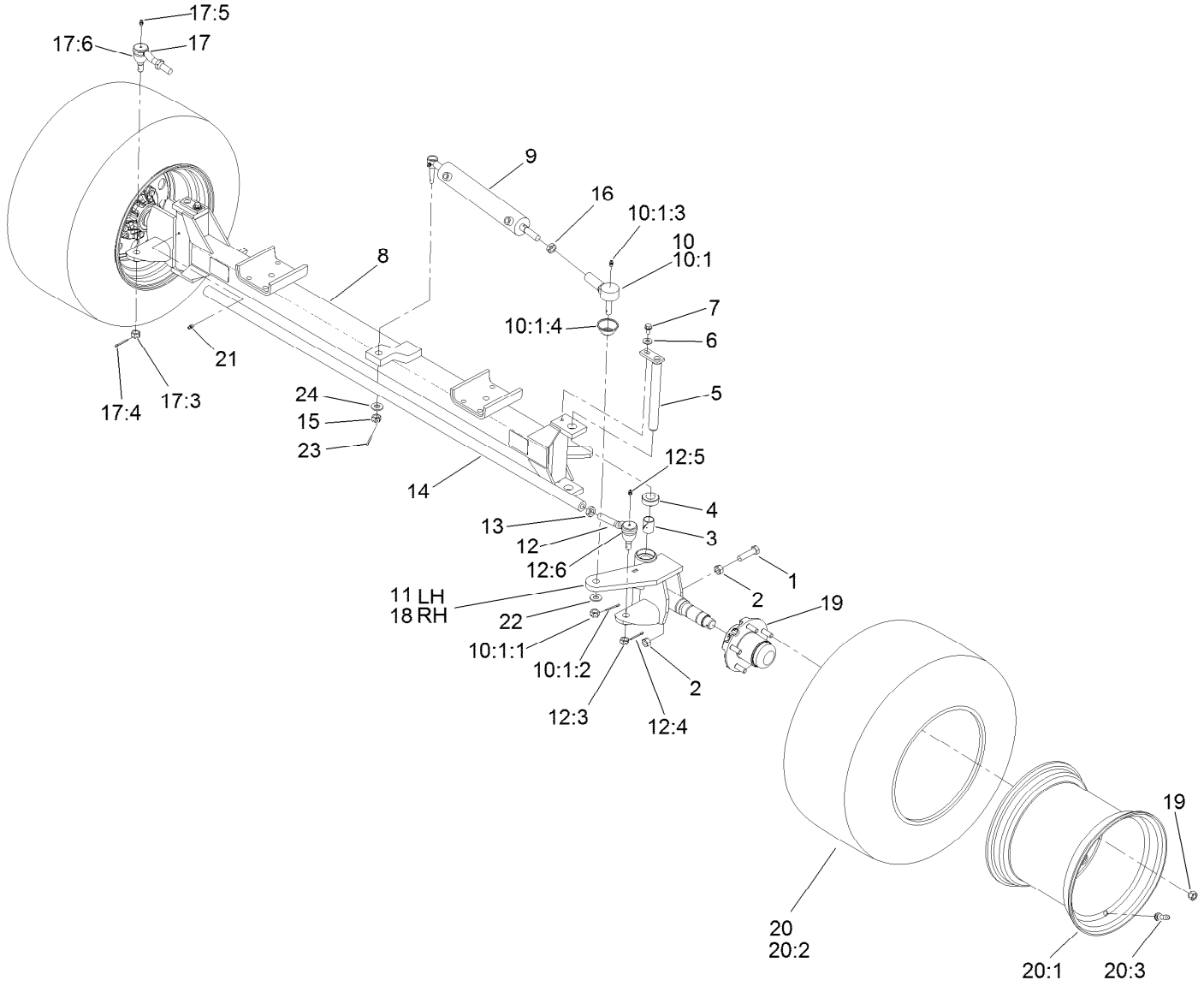

Front Axle Assembly

Ref.	Part Number	Qty.	Description
1	01-182-0816	2	Bolt-HH
2	3217-9	4	Nut-HH
3	93-6586	4	Bushing
4	93-6587	2	Bearing
5	93-6584	2	King Pin ASM
6	3256-3	2	Washer-Flat
7	32144-14	2	Screw-HWHTF
8	121-5087-03	1	Front Axle ASM
9	93-6510	1	Cylinder ASM
10	93-6509-03	1	Tie Rod End ASM
10:1		1	End-Tie Rod ●
10:1:1	32136-3	1	Nut-SHH
10:1:2	3272-12	1	Pin-Cotter
10:1:3	302-5	1	Fitting-Grease
10:1:4	106-4901	1	Seal-End, Rod
11	117-5899-03	1	LH Spindle Housing ASM
12	87-1470-03	1	End-Tie Rod, LH
12:3	32136-3	1	Nut-SHH

Ref.	Part Number	Qty.	Description
12:4	3272-12	1	Pin-Cotter
12:5	302-5	1	Fitting-Grease
12:6	107-1587	1	Seal
13	3218-21	1	Nut-Jam
14	93-6588	1	Rod-Steering
15	32136-13	1	Nut-SHH
16	3220-11	2	Nut-Jam
17	87-1480-03	1	End-Tie Rod, RH
17:3	32136-3	1	Nut-SHH
17:4	3272-12	1	Pin-Cotter
17:5	302-5	1	Fitting-Grease
17:6	107-1587	1	Seal
18	117-5897-03	1	Spindle ASM
19	119-6003	2	Hub ASM
20	127-1100	2	Wheel And Tire ASM
20:1	125-5899	1	Wheel
20:2	120-2114	1	Tire-Smooth
20:3	232-27	1	Stem-Valve

● Not serviced separately

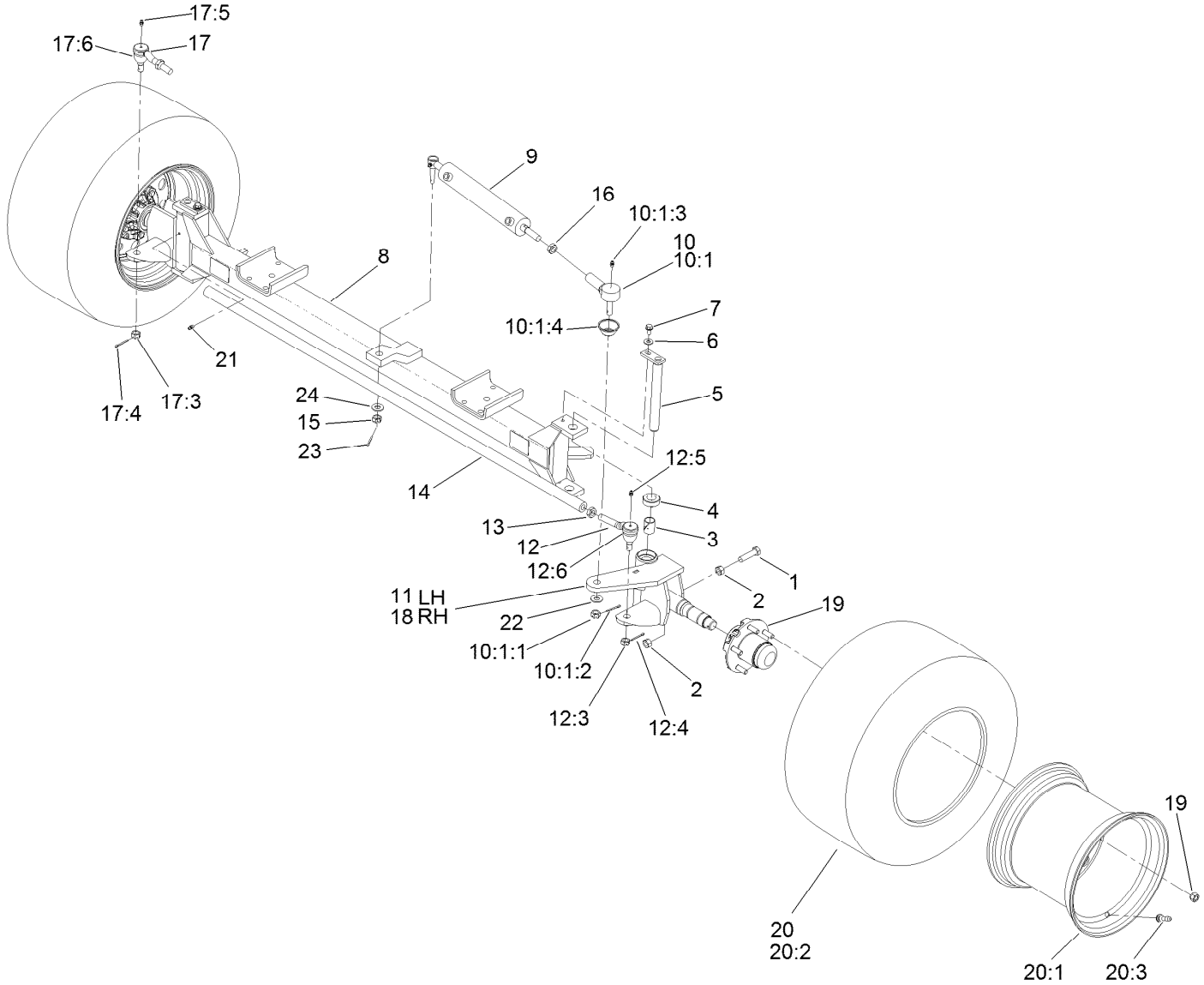

Front Axle Assembly (continued)

Ref.	Part Number	Qty.	Description
21	302-5	2	Fitting-Grease
22	87-7270	1	Washer-Thrust
23	3272-12	1	Pin-Cotter
24	119-1868	1	Washer

● Not serviced separately

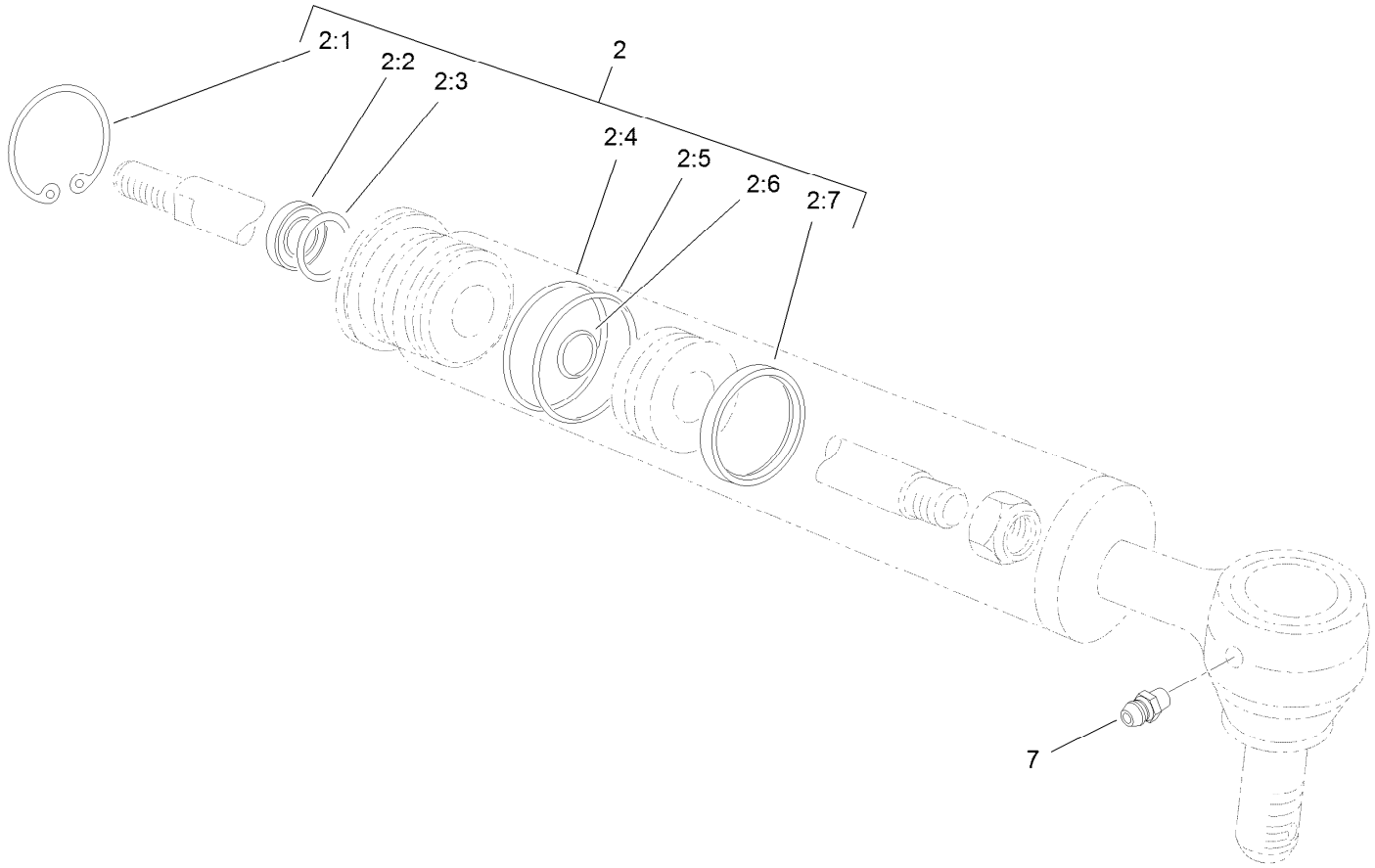

Hydraulic Cylinder Assembly No. 93-6510

Ref.	*Part Number*	*Qty.*	*Description*
2	92-3992	1	Repair Kit
2:1		1	Ring-Retaining ●
2:2		1	Seal-Dust ●
2:3		1	Seal-Rod ●
2:4		1	Ring-Backup ●
2:5		1	O-Ring ●
2:6		1	O-Ring ●
2:7		1	Uniring ●
7	302-5	1	Fitting-Grease

● Not serviced separately

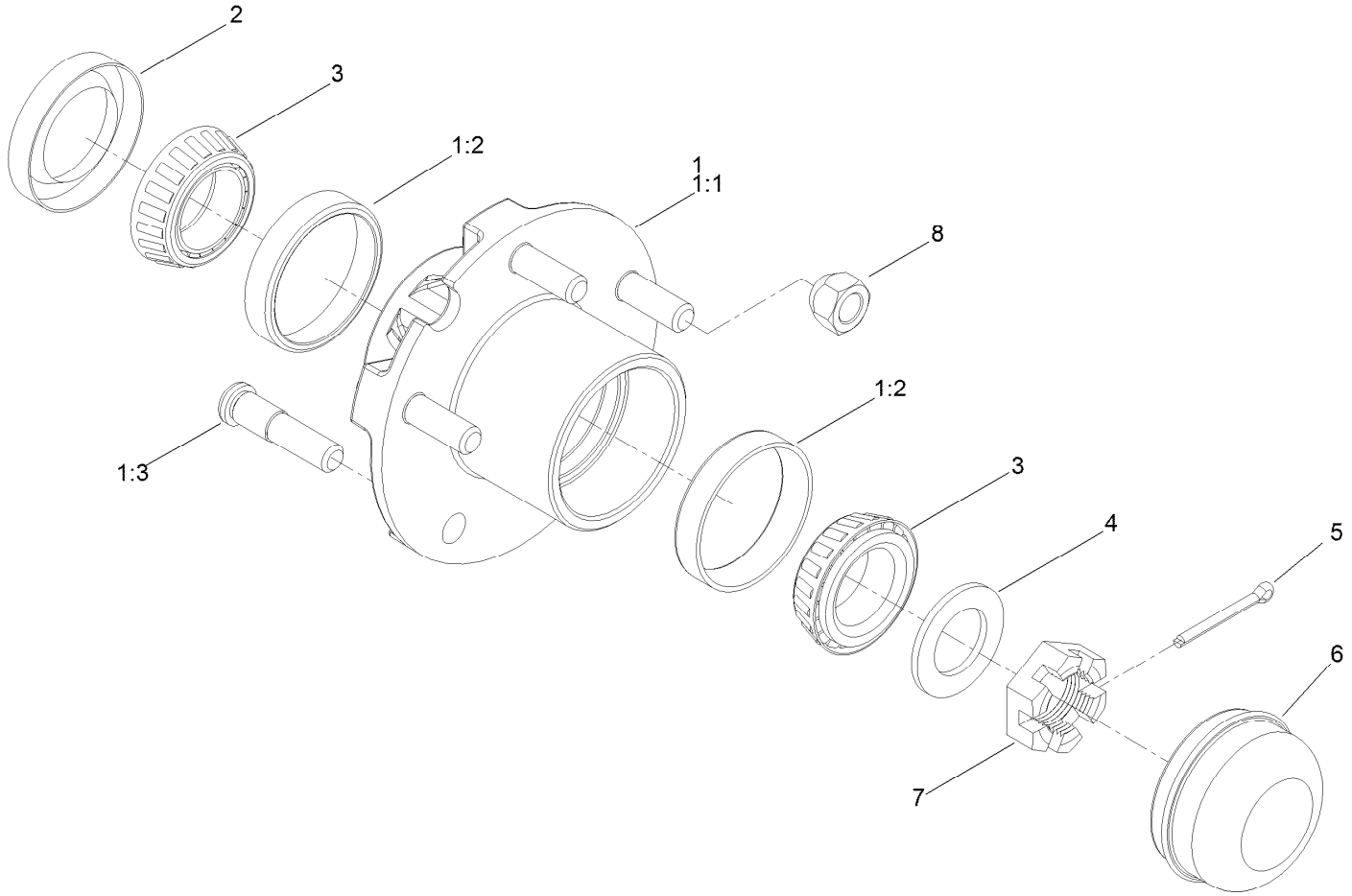

Hub Assembly No. 119-6003

Ref.	Part Number	Qty.	Description
1	119-6001	1	Hub ASM
1:1		1	Hub ●
1:2	115-9471	2	Bearing-Cup
1:3	69-2990	5	Stud-Wheel
2	94-7285	1	Seal
3	254-62	2	Bearing-Roller, Cone
4	85-5770	1	Washer-Thrust
5	3272-18	1	Pin-Cotter
6	119-6004	1	Cap-Dust
7	119-6005	1	Nut-Slotted, Hex
8	242-35	5	Nut-Wheel

● Not serviced separately

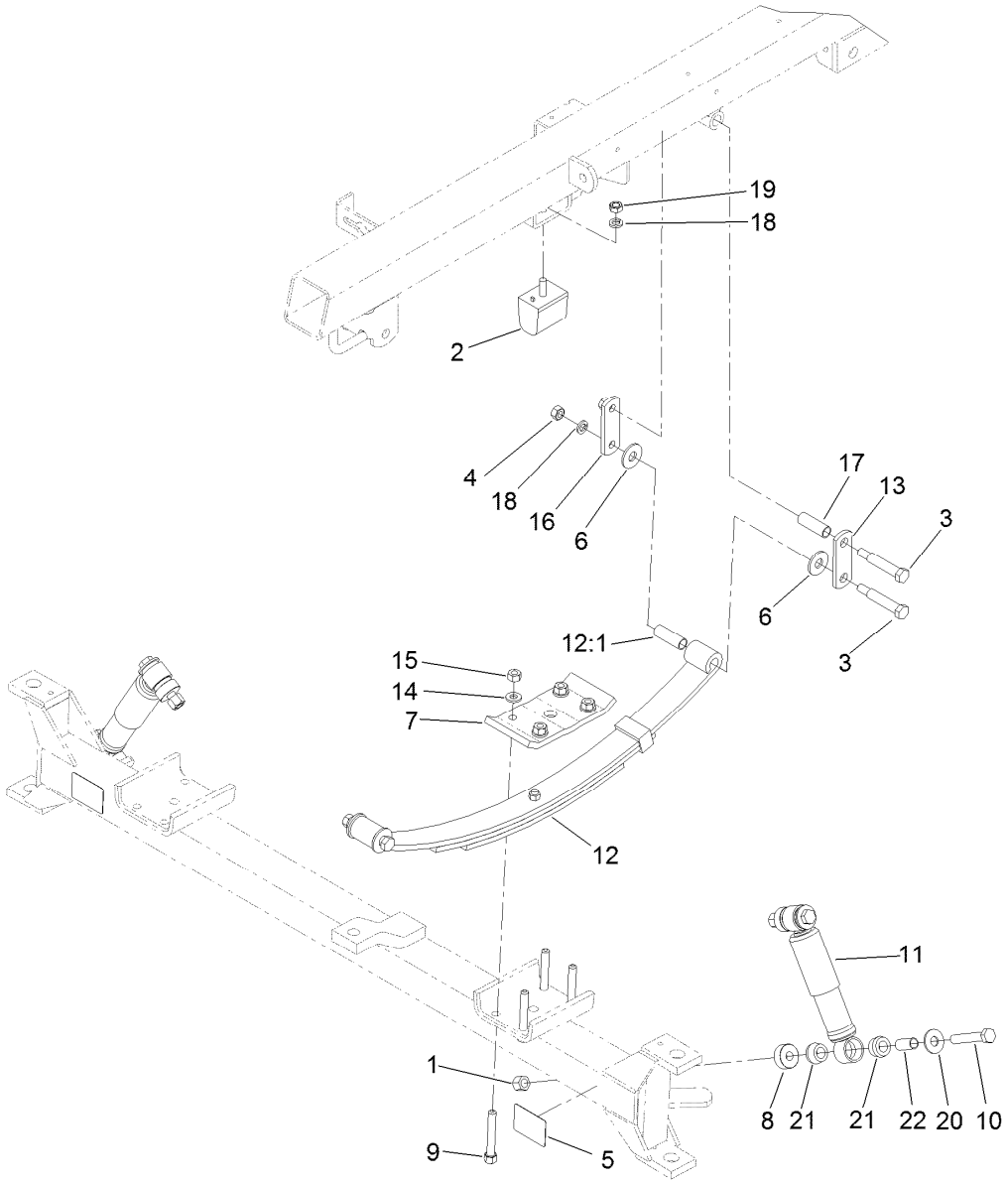

Front Suspension Assembly

Ref.	Part Number	Qty.	Description
1	3296-23	4	Nut-Lock, NI
2	87-3470	2	Bumper
3	110-5072	6	Bolt-Shoulder
4	3217-8	6	Nut-Hex
5	107-8667	2	Decal-Jacking
6	93-6161	8	Washer
7	121-5089-03	2	Plate-Top, Spring
8	127-2913	4	Spacer
9	26-0672	8	Bolt-Blade
10	325-12	4	Screw-HH
11	121-9774	2	Absorber-Shock
12	99-0570	2	Spring-Leaf

Ref.	Part Number	Qty.	Description
12:1	119-9437	2	Bushing-Spring, Leaf
13	42574	2	Shackel-Outside
14	87-7480	8	Washer
15	106-0327	8	Nut-Hex
16	42576	2	Shackel-Inside
17	42592	2	Bushing-Shackle
18	3253-6	8	Washer-Lock
19	93-6166	2	Nut-Hex
20	3256-6	4	Washer-Flat
21	87-3920	8	Bushing
22	127-2925	4	Sleeve

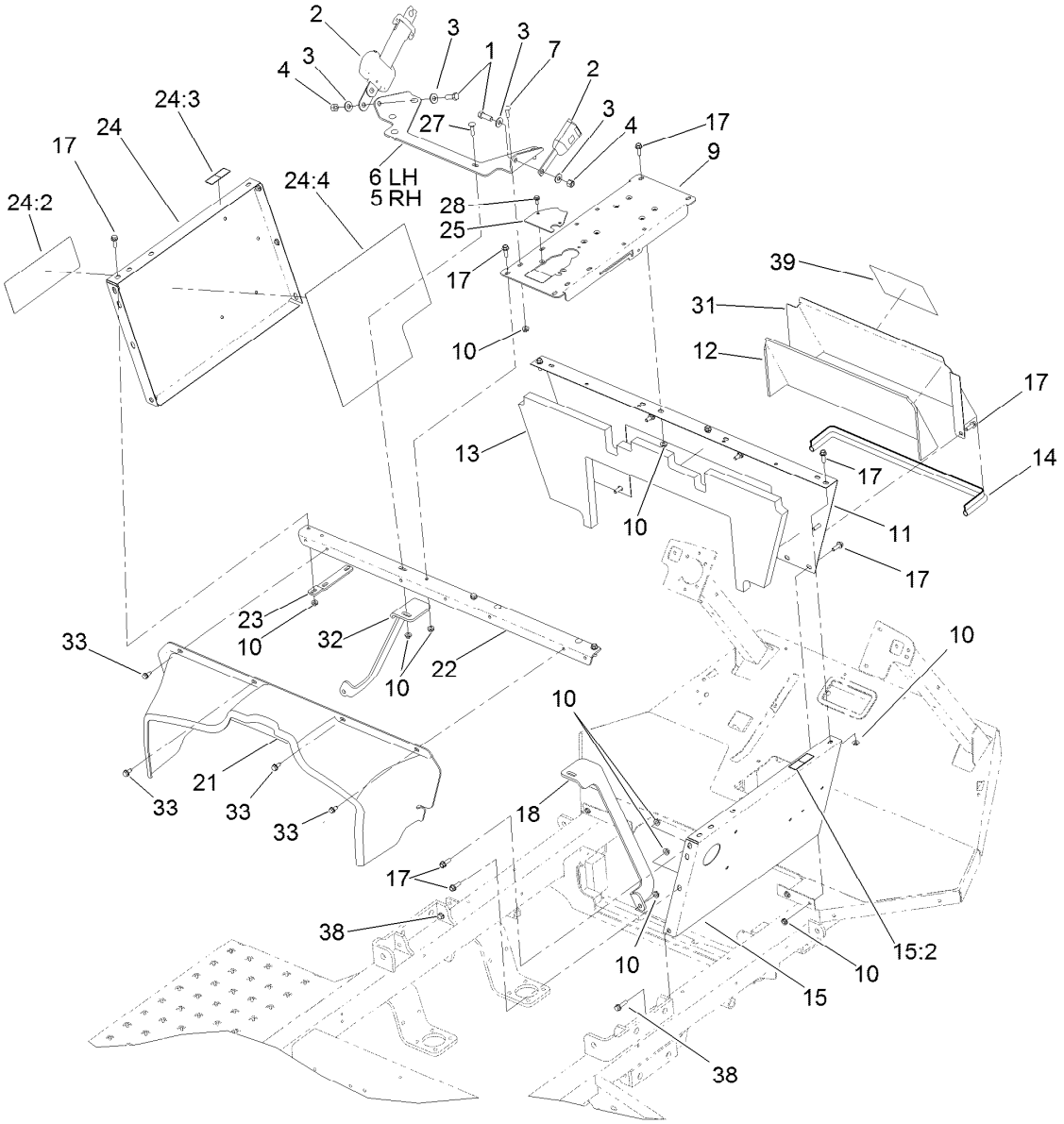

Seat Base Assembly

Ref.	Part Number	Qty.	Description
1	324-5	4	Screw-HH
2	110-0413	2	Seatbelt-Retractable
3	3256-4	8	Washer-Flat
4	3296-48	4	Nut-Lock, NI
5	121-5071-03	1	Bracket-Seat Belt, RH
6	121-5072-03	1	Bracket-Seat Belt, LH
7	3230-22	10	Screw-CARR
9	132-7667-03	1	Base-Console
10	32128-20	38	Nut-HF
11	130-7107-01	1	Panel-Front, Seatbase
12	130-7132	1	Barrier-Noise, Access Panel
13	130-7135	1	Barrier-Noise, Front Panel
14	131-3282	1	Trim
15	130-7104	1	Panel-Seatbase, RH
15:2	120-0625	1	Decal-Warning, Pinch Point
17	3234-17	20	Screw-HHF
18	107-8729-03	1	Support-RH

Ref.	Part Number	Qty.	Description
21	132-7660	1	Cover-Engine
22	119-5025-03	1	Angle-Seat Box
23	95-2264-03	2	Strap-Support, Belt
24	131-5788	1	LH Seat Box Panel ASM
24:2	120-0619	1	Decal-Warning
24:3	120-0625	1	Decal-Warning, Pinch Point
24:4	131-5806	1	Shield-Heat Tape, Seatbase (LH)
25	132-7705-03	1	Retainer-Harness, Base
27	3230-3	2	Screw-CARR
28	119-4012	2	Screw-HWHTF
31	130-7119-01	1	Panel-Access, Seatbase
32	107-8730-03	1	Support-LH
33	32144-70	4	Screw-HWHTF
38	3234-36	2	Screw-HHF
39	136-2257	1	Decal-Aid, Quick Reference

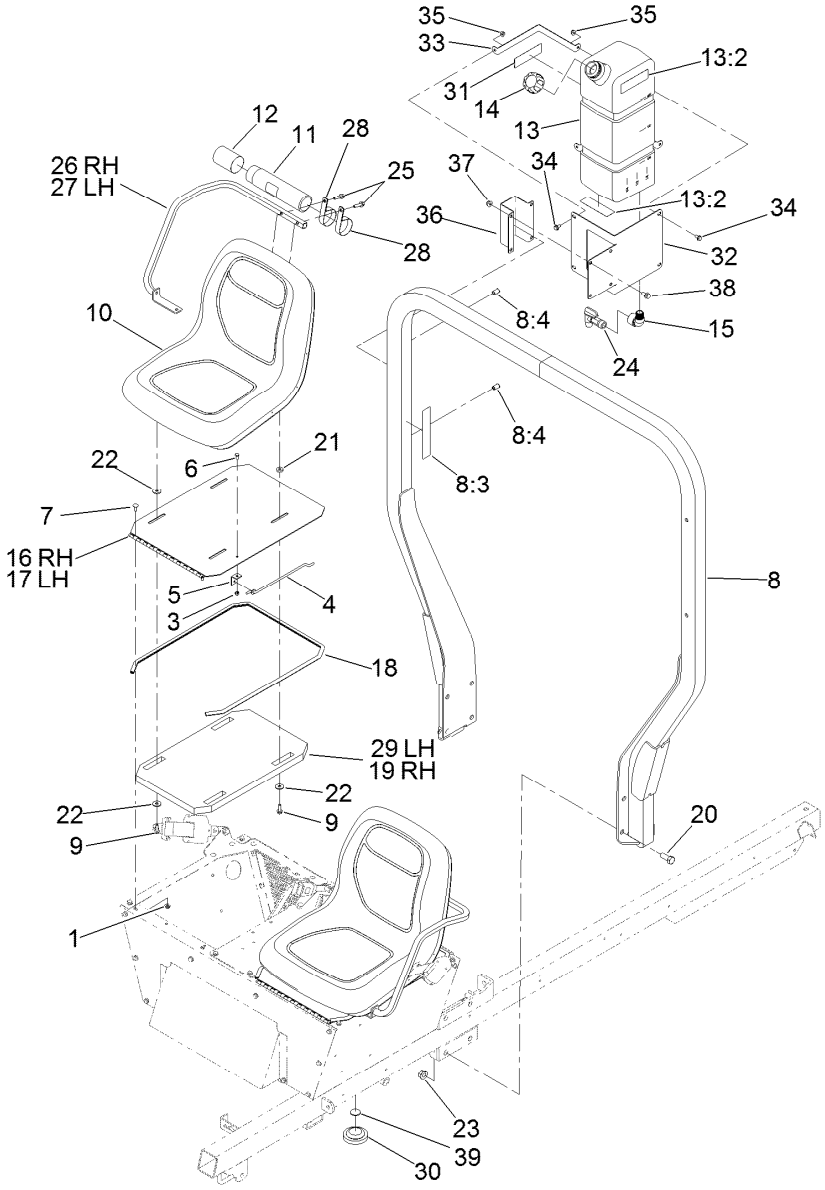

Seat, Fresh Water Tank and Roll-Over Protection System Assembly

Ref.	Part Number	Qty.	Description
1	32128-20	4	Nut-HF
3	3296-42	2	Nut-Lock, NI
4	94-7204	2	Rod-Prop, Seat
5	94-7203	2	Bracket
6	321-3	2	Screw-HH
7	3230-23	4	Screw-CARR
8	119-0589	1	ROPS ASM
8:3	117-4955	1	Decal-Danger, ROPS (CE)
8:4	32148-10	2	Nut-Clinch
9	33104-025	8	Screw-HHF
10	112-2923	2	Seat ASM
11	104-7050	1	Tube-Manual
12	104-7048	1	Cap-Housing
13	132-7745	1	Fresh Water Tank ASM
13:2	120-0616	3	Decal-Water, Fresh
14	106-5052	1	Cap-Water, Fresh
15	132-7706	1	Elbow-90DEG
16	108-3289-03	1	Panel-Seat, RH
17	132-7664-03	1	Panel-Seat, LH

Ref.	Part Number	Qty.	Description
18	94-7085	2	Trim
19	108-3290	1	Barrier-Noise, Seat
20	327-4	8	Screw-HH
21	7-0081	6	Washer-Flat
22	52-2861	10	Washer
23	32128-50	8	Nut-Flange
24	100-7011	1	Spigot-90 DEG
25	33104-035	4	Screw-HHF
26	119-0732-03	1	Armrest-RH
27	119-0731-03	1	Armrest-LH
28	2412-133	2	Clamp-R
29	132-7666	1	Barrier-Noise, Seat
30	100-3524	1	Switch-Seat
31	120-0616	1	Decal-Water, Fresh
32	132-5619-03	1	Mount-Tank, Eye Wash
33	132-7628-03	2	Band-Tank, Eye Wash
34	3234-7	4	Screw-HHF
35	104-8300	4	Nut-HF, NI

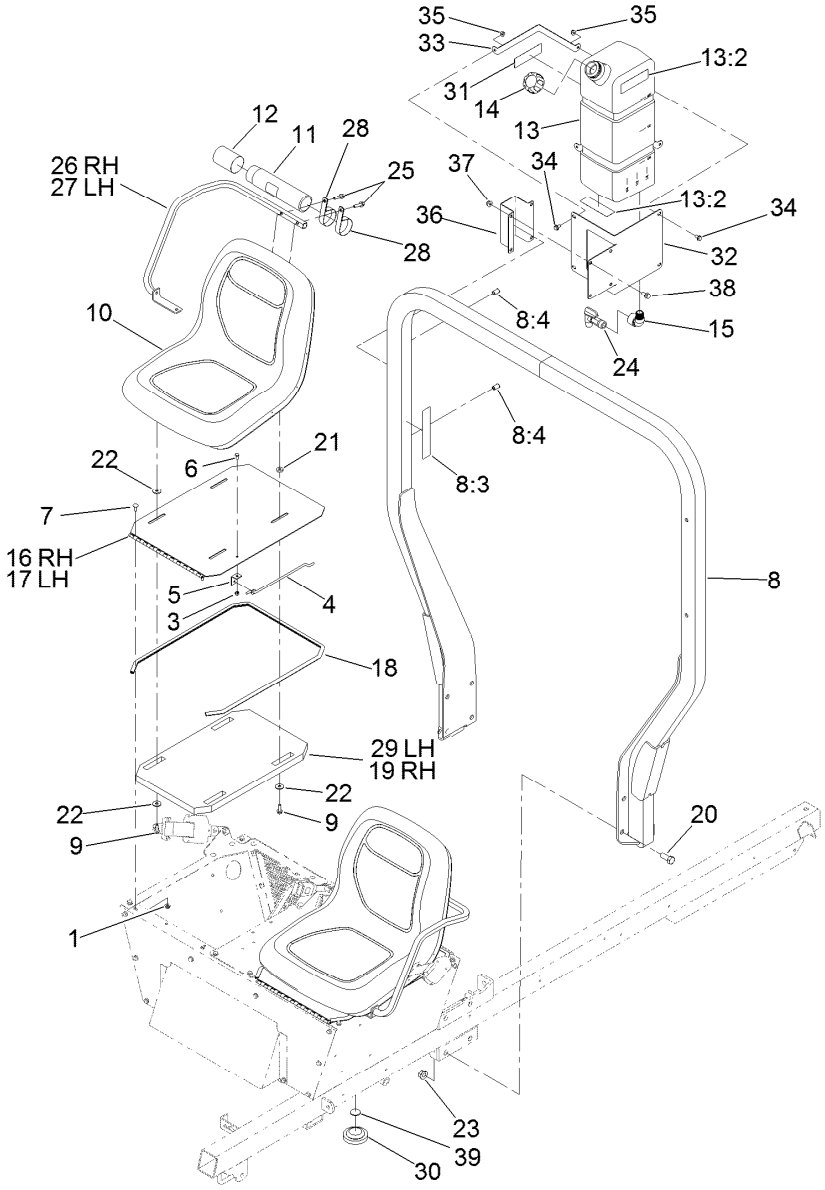

Seat, Fresh Water Tank and Roll-Over Protection System Assembly (continued)

Ref.	Part Number	Qty.	Description
36	132-7627-03	1	Clamp-Bracket, Fresh Water Tank
37	104-8301	4	Nut-HF, NI
38	3234-1	4	Screw-HHF
39	133-2797	1	Disc-Plunger

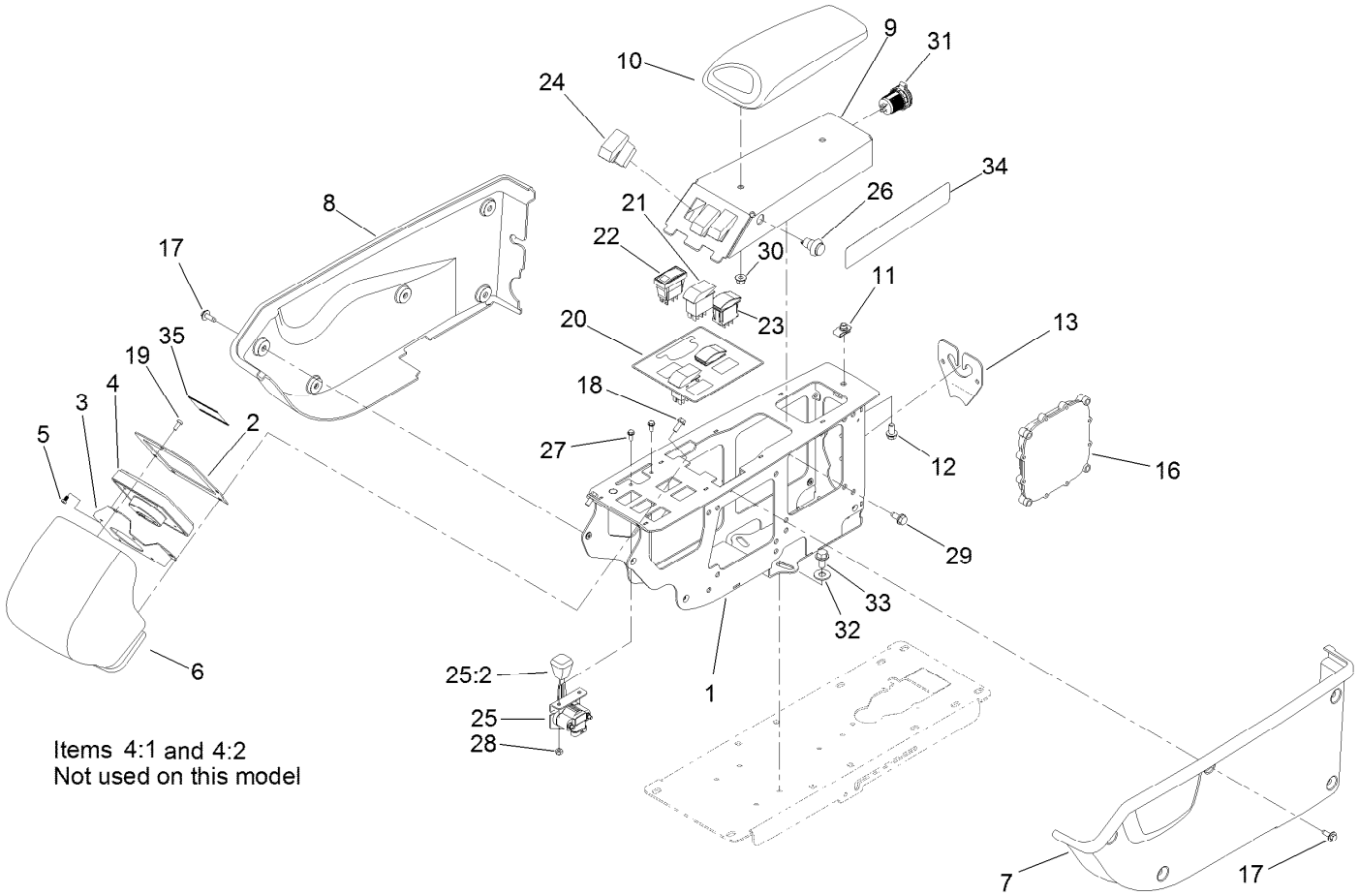

Control Console Assembly

Ref.	Part Number	Qty.	Description
1	132-5640-03	1	Frame-Console
2	132-7615-03	1	Plate-Monitor
3	132-7610-03	1	Retainer-Monitor
4	125-5320	1	Infocenter
4:1	115-8884	4	Nut-Thumb
4:2	115-8885	4	Stud
5	132-7668	4	Screw-PPH
6	132-7617	1	Hood-Console
7	132-7611	1	Cover-LH
8	132-7612	1	Cover-RH
9	132-5645-03	1	Panel-Arm
10	131-9637	1	Armrest-Quick Find
11	112-3306	1	Nut
12	3234-14	1	Screw-HHF
13	132-7704-03	1	Retainer-Harness, Console
16	114-3321	1	Controller-Tec
17	119-4012	12	Screw-HWHTF
18	32144-85	2	Screw-HWH
19	3250-12	3	Screw-PPH

Ref.	Part Number	Qty.	Description
20	132-7695	1	Decal-Console
21	100-8490	2	Switch-Rocker, On-None-On
22	104-9007	1	Switch-Rocker
23	100-1535	2	Switch, (On)-Off-(On)
24	95-8999	3	Switch
25	122-0111	1	Throttle-Electronic
25:2	66-0120	1	Knob
26	125-7996	1	Switch-Pb, Momentary
27	3290-321	2	Screw-HWH
28	3296-2	2	Nut-Lock, NI
29	32144-70	4	Screw-HWHTF
30	104-8300	2	Nut-HF, NI
31	131-8388	1	Socket-USB
32	3256-4	3	Washer-Flat
33	110-9380	3	Screw-HWH
34	132-7786	1	Decal-Quickfind
35	114-5554	1	Decal-Center, Info

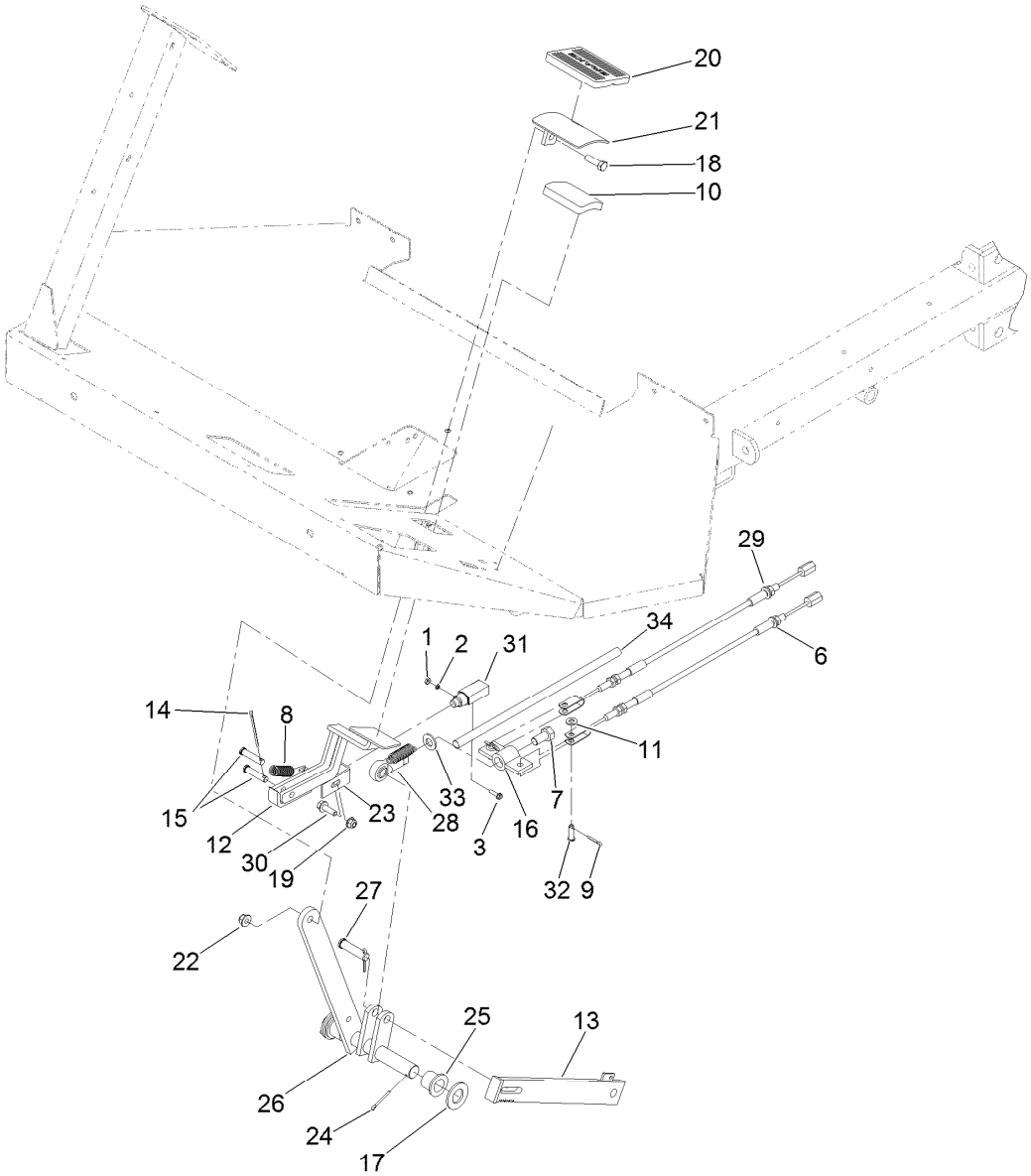

Brake Pedal Assembly

Ref.	Part Number	Qty.	Description
1	3217-26	2	Nut-Hex
2	3253-17	2	Washer-Lock
3	32105-13	2	Screw-HWH
6	119-9364	1	Cable-Brake, LH
7	3213-1	1	Screw-HH
8	92-0417	2	Spring-EXT
9	3272-10	2	Pin-Cotter
10	42719	1	Pad-Pedal
11	3256-23	2	Washer-Plain
12	93-6599-03	1	Catch
13	93-6598-03	1	Strap-Brake
14	3272-53	1	Pin-Cotter
15	283-15	2	Pin-Clevis
16	93-6595	1	Equalizer-Brake
17	3256-29	3	Washer-Flat
18	323-7	1	Screw-HH

Ref.	Part Number	Qty.	Description
19	104-8300	1	Nut-HF, NI
20	7-3900	1	Pad-Brake
21	100-8422-03	1	Bracket-Pedal
22	104-8301	1	Nut-HF, NI
23	93-6592-03	1	Bracket
24	3272-12	3	Pin-Cotter
25	94-7164	2	Bearing
26	93-6589	1	Shaft-Brake
27	42195	1	Pin-Clevis
28	522087	1	Rod-End
29	119-9365	1	Cable-Brake, RH
30	3234-17	1	Screw-HHF
31	99-7407	1	Switch
32	283-58	2	Pin-Clevis
33	3256-26	1	Washer-Flat
34	130-7176	1	Sleeve-Thermal, Wrap

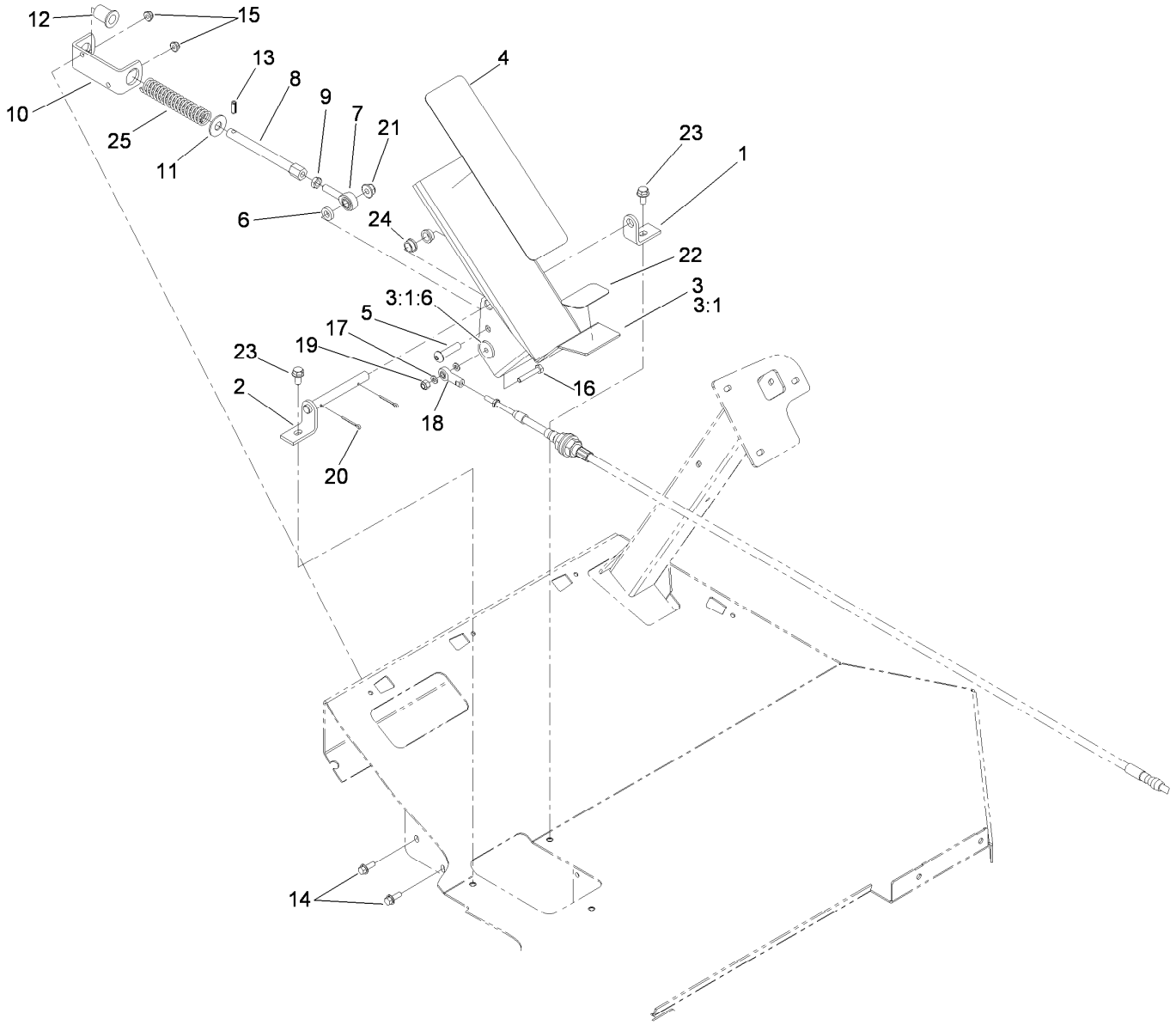

Traction Pedal Assembly

Ref.	Part Number	Qty.	Description
1	92-0450-03	1	Bracket-Pin
2	92-0448	1	Pin-Pivot
3	106-5247-03	1	Traction Pedal ASM
3:1		1	Pedal-Traction ●
3:1:6	106-5248	1	Spacer
4	71-0440	1	Abrasive-Pedal
5	95-3857	1	Screw-HSBH
6	80-7730	1	Spacer
7	2411-36	1	Bearing-End, Rod
8	92-7609	1	Shaft-Spring
9	3220-3	1	Nut-HJ
10	92-7608-03	1	Bracket-Spring
11	3256-5	1	Washer-Flat
12	92-7610	1	Retainer-Spring

Ref.	Part Number	Qty.	Description
13	32121-11	1	Pin-Roll
14	3234-4	2	Screw-HHF
15	104-7201	2	Nut-HF
16	321-9	1	Screw-HH
17	33093-00	2	Washer-Flat
18	2411-41	1	Rod End-Ball Joint
19	3296-42	1	Nut-Lock, NI
20	3272-7	2	Pin-Cotter
21	104-8301	1	Nut-HF, NI
22	71-0450	1	Abrasive-Pedal, Rear
23	3234-14	2	Screw-HHF
24	256-156	2	Bushing-Flange
25	84-9100	1	Spring

● Not serviced separately

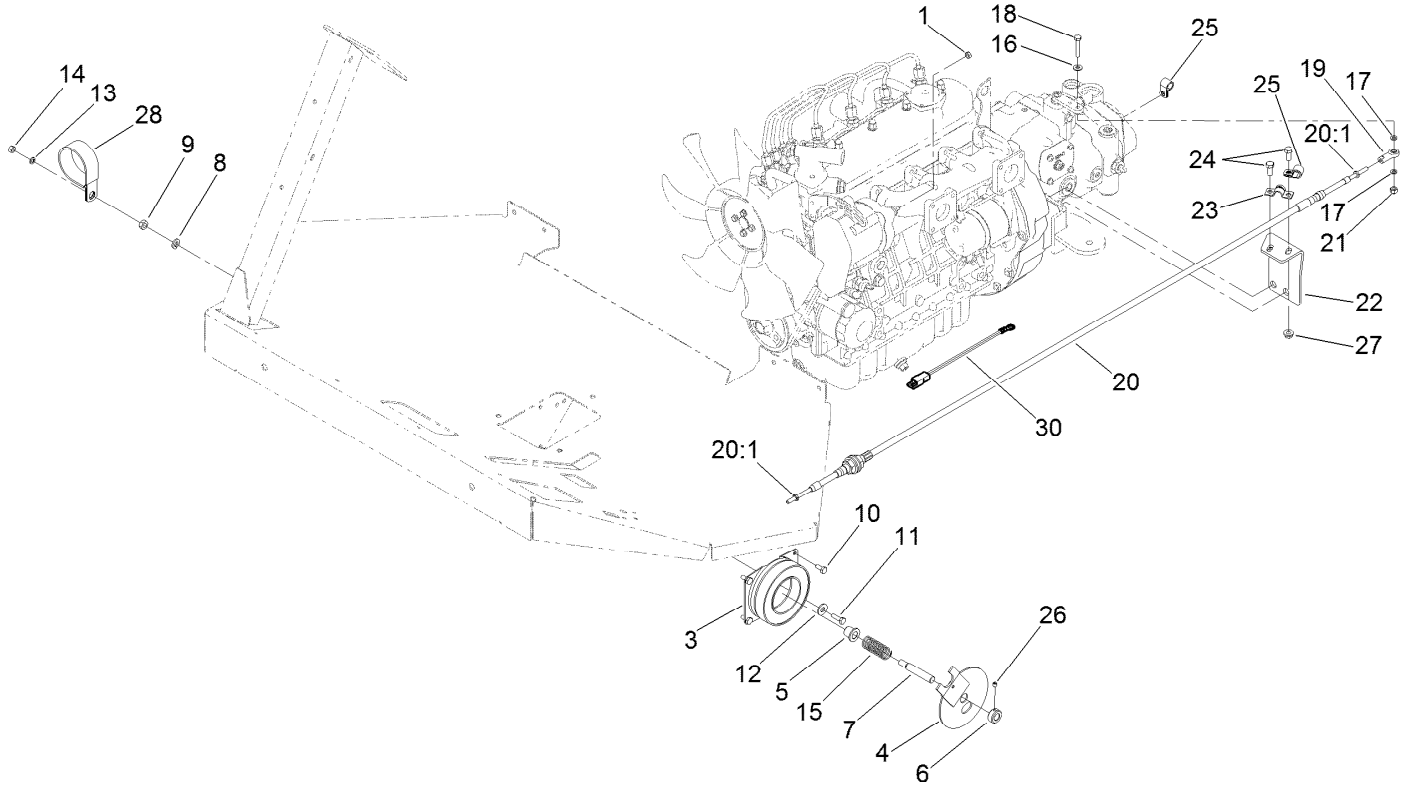

Throttle Assembly

Ref.	Part Number	Qty.	Description
1	33013-00	1	Nut-Hex
3	42-1720	1	Core-Field, Coil
4	43-6110-03	1	Plate-Clutch
5	256-273	1	Bushing-Flange
6	43-6320	1	Collar
7	69-9170	1	Shaft-Cruise
8	3253-5	1	Washer-Lock
9	3217-7	1	Nut-Hex
10	321-3	3	Screw-HH
11	321-5	1	Screw-HH
12	3256-3	1	Washer-Flat
13	3253-3	4	Washer-Lock
14	3217-5	4	Nut-Hex
15	43-6200	1	Spring-Compression
16	3256-22	1	Washer-Flat

Ref.	Part Number	Qty.	Description
17	33093-00	2	Washer-Flat
18	321-9	1	Screw-HH
19	2411-41	1	Rod End-Ball Joint
20	106-5233	1	Cable-Traction
20:1	3220-1	2	Nut-Jam
21	3296-42	1	Nut-Lock, NI
22	119-9359	1	Bracket-Cable, Rear
23	93-2092	1	Clamp-Cable
24	322-3	2	Screw-HH
25	2412-93	2	Clamp-R
26	3245-32	1	Screw-HSH
27	32128-20	2	Nut-HF
28	2412-102	1	Clamp-R
30	108-9455	1	Harness-Wire, Fusible Link

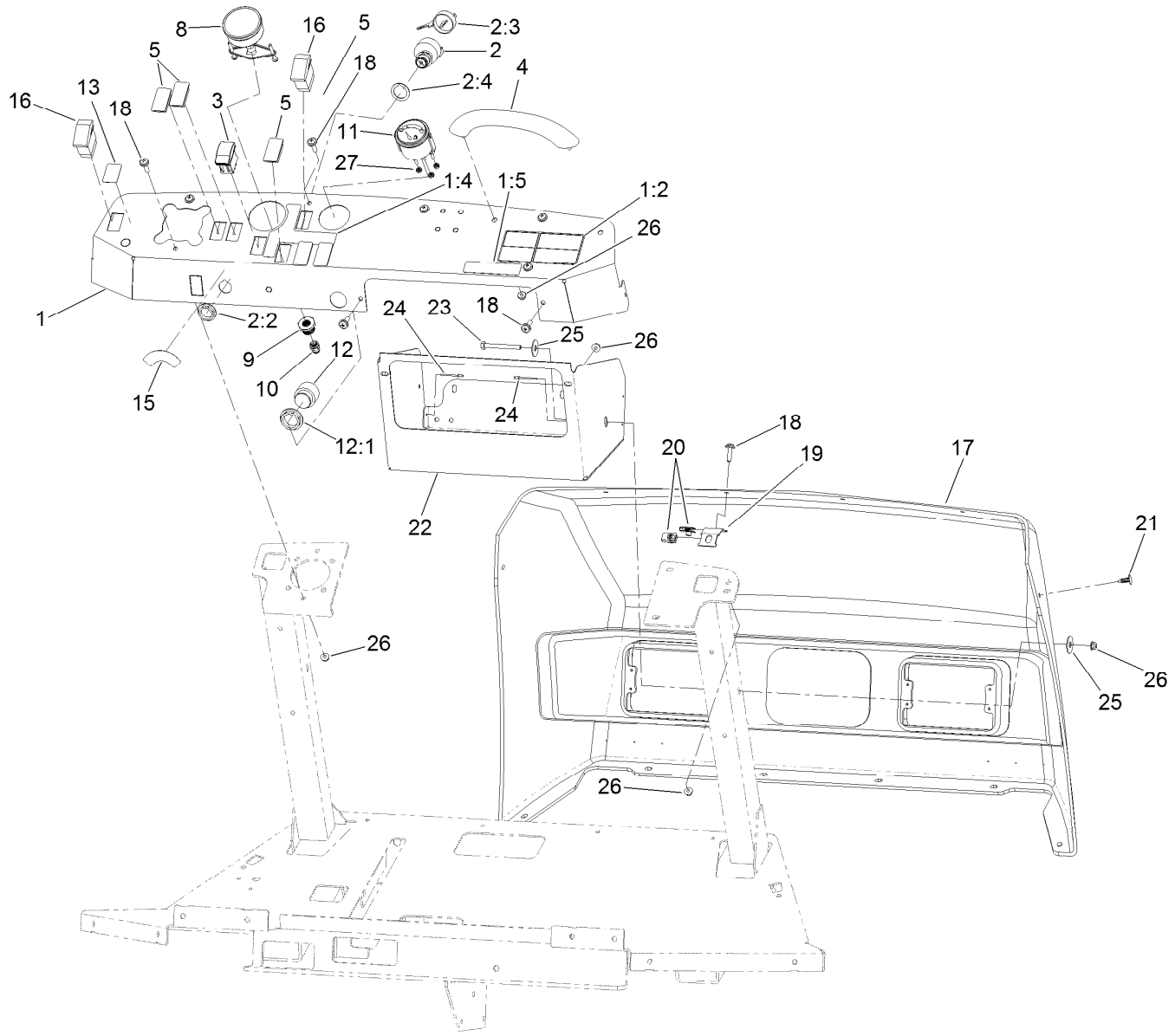

Dash Panel Assembly

Ref.	Part Number	Qty.	Description
1	132-7690	1	Dash Panel ASM
1:2	120-0624	1	Decal-Warning, Passenger
1:4	132-7689	1	Decal-Switch
1:5	117-2718	1	Decal-Arrester, Spark
2	106-5269	1	Ignition Switch ASM
2:2	108-8660	1	Nut-Mounting
2:3	106-5270	1	Ignition Key Set
2:4	108-8659	1	Washer-Backup
3	100-1535	1	Switch, (On)-Off-(On)
4	117-4948	1	Handle-Grab
5	99-7420	5	Plug-Hole
8	120-8546	1	Gauge-Pressure
9	100-8665	1	Reducer-Gauge, Pressure
10	100-8667	1	Coupler-Reducer
11	132-7614	1	Gauge-Fuel
12	80-9330	1	Audio Alarm ASM

Ref.	Part Number	Qty.	Description
12:1	104-5107	1	Nut-Plastic, Knurled
13	132-7708	1	Decal-Lights, Horn
15	132-7783	1	Decal-Ignition Switch, Gas
16	95-8999	2	Switch
17	117-0793	1	Hood
18	110-9361	12	Screw-PPH
19	117-0735	4	Bracket-Hood
20	107069	8	Clip
21	117-2382	2	Plug-Plastic
22	136-0426-03	1	Compartment-Storage
23	321-15	1	Screw-HH
24	3269-32	3	Rivet-Pop
25	52-2860	2	Washer
26	104-7201	7	Nut-HF
27	363-1483	3	Nut-Hex, K Lock

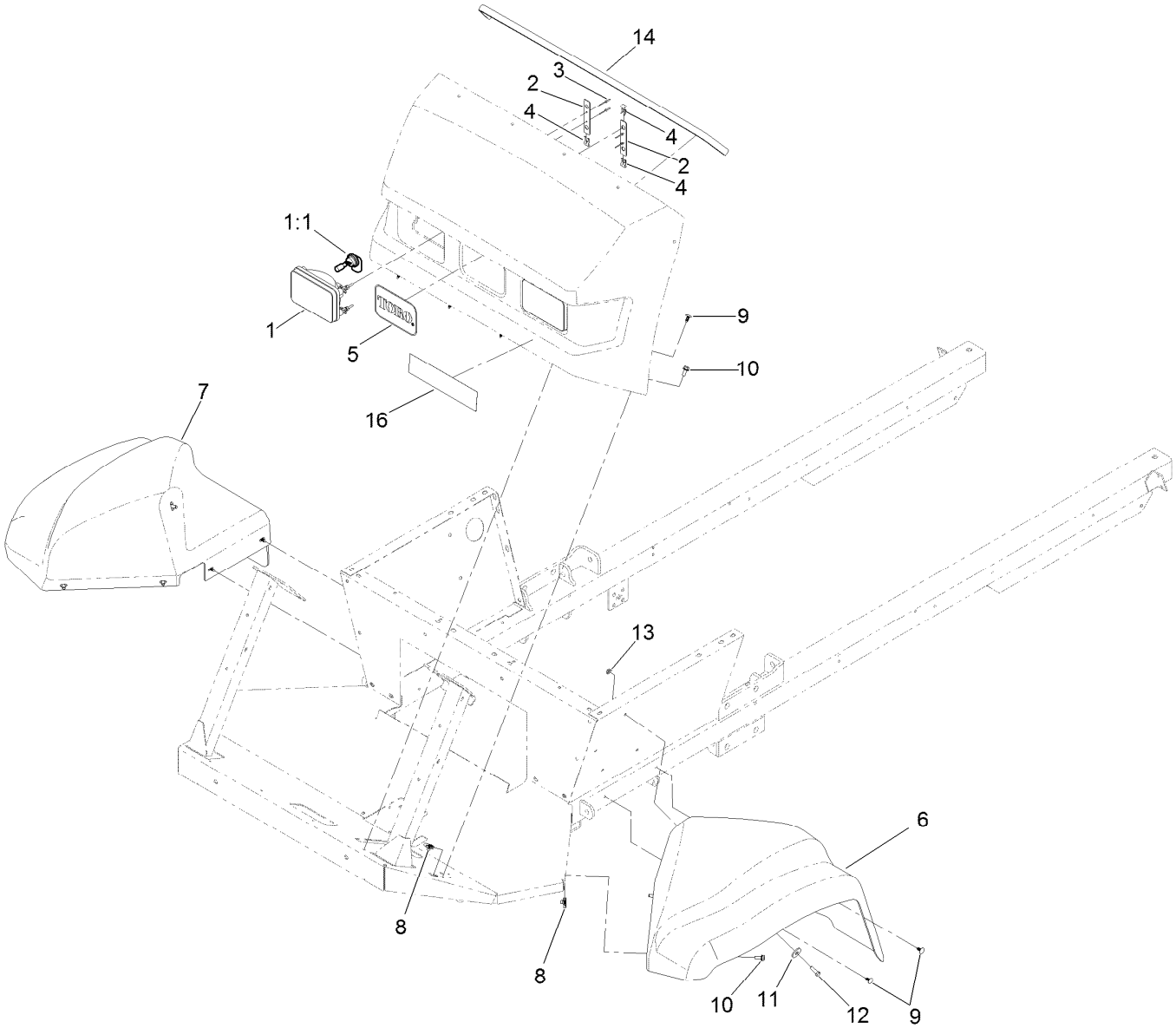

Hood and Fender Assembly

Ref.	Part Number	Qty.	Description
1	132-6703	2	Headlight ASM
1:1	115-2395	1	Bulb-Light
2	117-5832	4	Bracket-Headlight
3	3290-274	8	Rivet-Pop
4	115-2408	6	Clip-Speed
5	62-5550	1	Decal
6	119-0417	1	Fender
7	119-0418	1	Fender

Ref.	Part Number	Qty.	Description
8	94-2413	6	Nut-U
9	117-2382	8	Plug-Plastic
10	3234-47	6	Screw-HHF
11	63-8410	2	Washer
12	322-5	2	Screw-HH
13	32128-20	2	Nut-HF
14	119-0504	1	Trim-Hood
16	131-3309	1	Decal

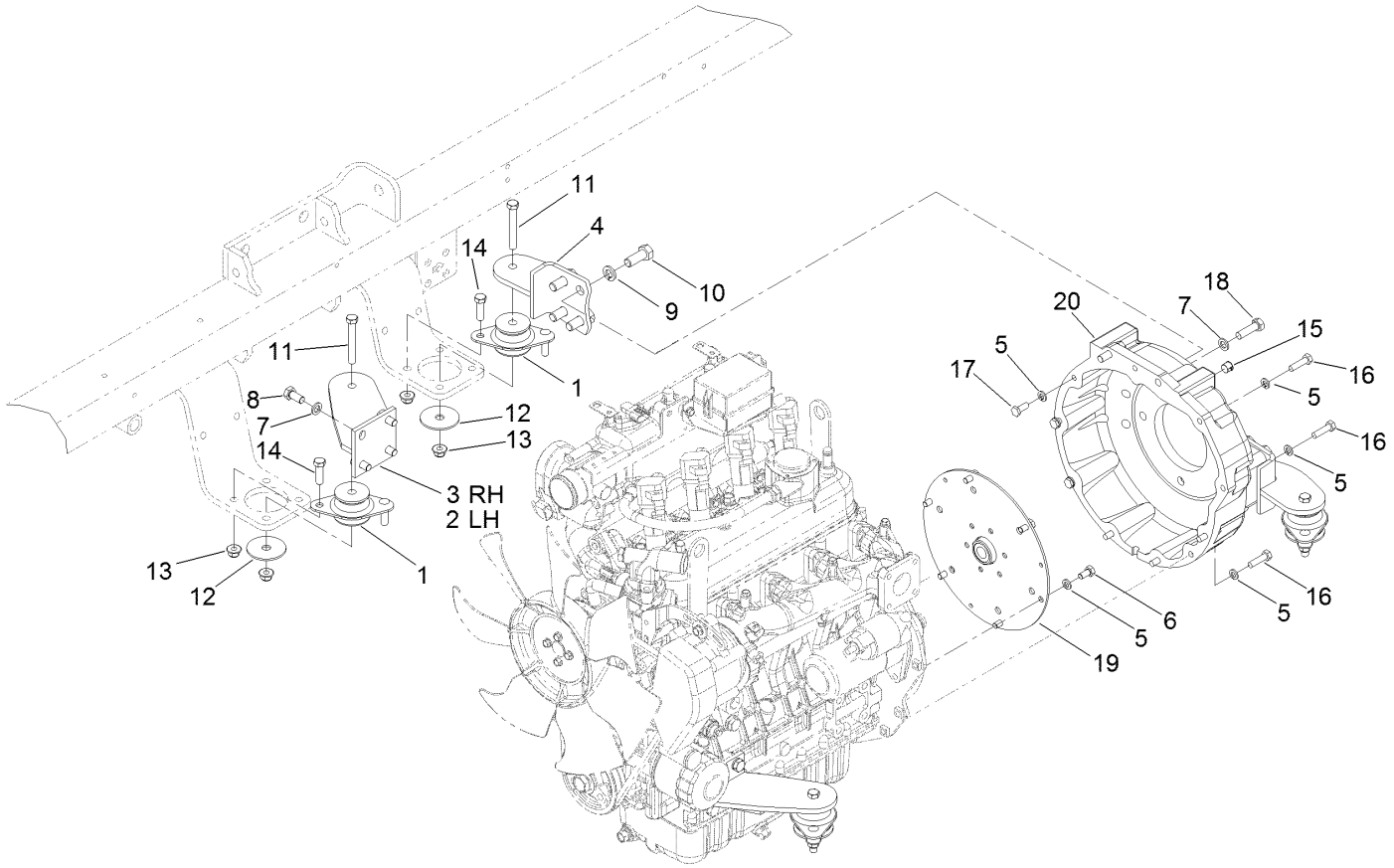

Engine Mounting and Bell Housing Assembly

Ref.	Part Number	Qty.	Description
1	131-1821	4	Mount-Engine
2	117-0667-03	1	Bracket-LH
3	117-0666-03	1	Bracket-RH
4	117-0669-03	2	Bracket-Mount, Rear
5	3253-4	15	Washer-Lock
6	99-5132	6	Bolt
7	48-9590	10	Washer-Lock
8	63-7790	8	Screw-Cap
9	3253-7	8	Washer-Lock
10	325-5	8	Screw-HH

Ref.	Part Number	Qty.	Description
11	323-13	4	Screw-HH
12	87-5100	4	Washer-Snubbing
13	104-8301	12	Nut-HF, NI
14	323-7	8	Screw-HH
15	119-6039	2	Plug-Plastic
16	33114-030	6	Screw-HH
17	33114-020	3	Screw-HH
18	56-2140	2	Screw-HH
19	92-0285	1	Coupling ASM
20	105-0100	1	Housing-Flywheel

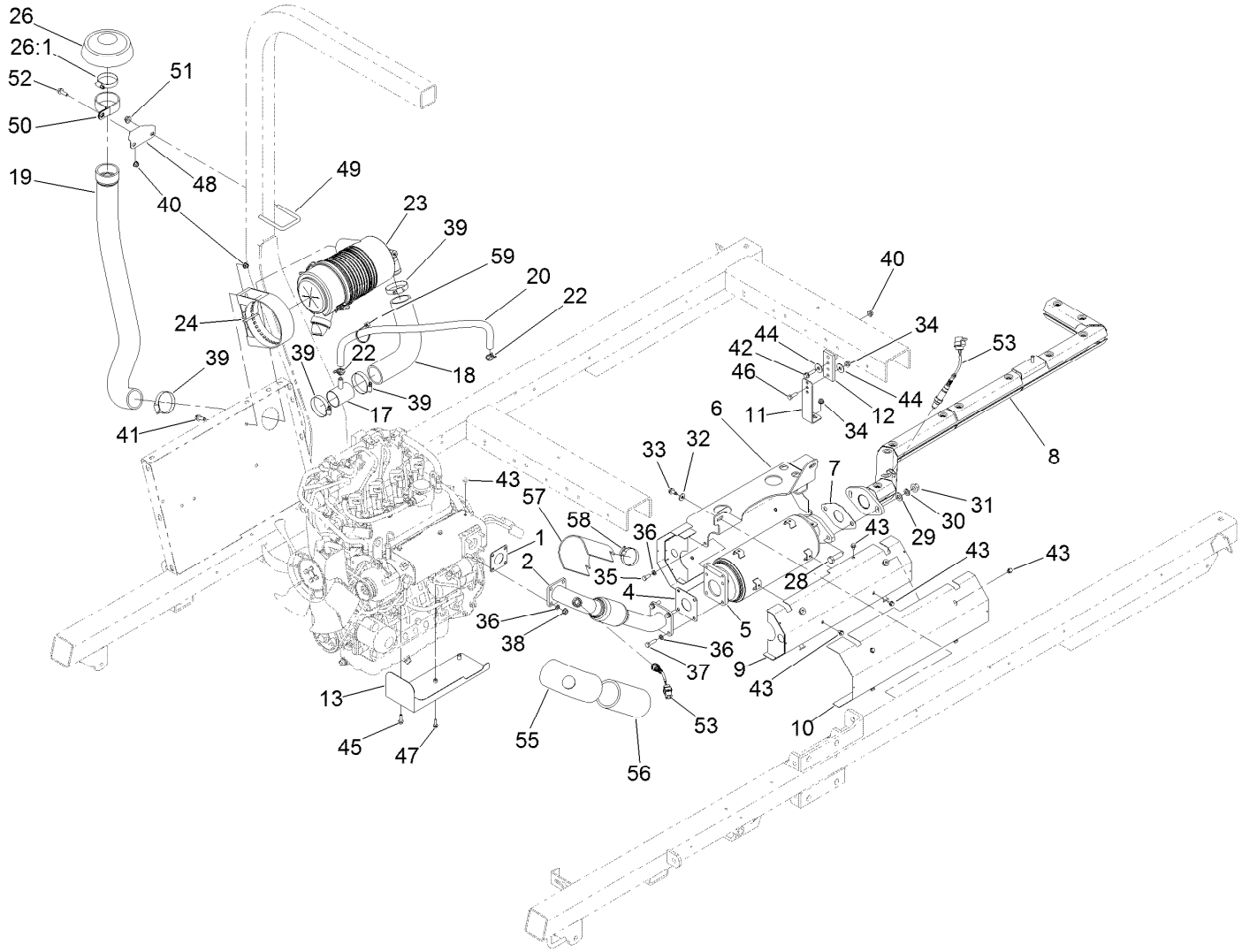

Muffler and Air Cleaner Assembly

Ref.	Part Number	Qty.	Description
1	99-8343	1	Gasket-Muffler
2	131-5773	1	Pipe-Header
4	121-5590	1	Gasket-Manifold, Outlet
5	133-2788	1	Catalyst
6	127-8935	1	Bracket-Mount, Exhaust
7	121-5591	1	Gasket-Outlet, Catalyst
8	130-7333	1	Pipe-Tail
9	130-7228	2	Shield-Muffler, Inner
10	130-7208	2	Shield-Muffler, Outer
11	120-8557	1	Bracket-Hanger
12	117-0744	1	Hanger-Muffler
13	130-7206	1	Shield-Manifold, Bottom
17	120-5552	1	Vent
18	130-7098	1	Hose-Intake
19	136-2267	1	Hose-Air Cleaner
20	131-5841	1	Hose-Overflow
22	117-1193	2	Clamp-Hose
23	106-5277	1	Air Cleaner ASM
24	98-4525	1	Bracket-Cleaner, Air
26	105-2539	1	Cap
26:1	2412-130	1	Clamp-Hose

Ref.	Part Number	Qty.	Description
28	33116-040	2	Screw-HH
29	33096-00	2	Washer-Flat
30	48-8070	2	Washer-Lock
31	33006-00	2	Nut-HF
32	3256-3	2	Washer-Flat
33	32104-32	2	Screw-HWH
34	32128-25	2	Nut-HF
35	33114-020	4	Screw-HH
36	3253-4	12	Washer-Lock
37	33114-030	4	Screw-HH
38	33004-00	8	Nut-HF
39	2412-130	4	Clamp-Hose
40	104-8300	4	Nut-HF, NI
41	3234-17	2	Screw-HHF
42	119-4036	1	Screw-HHF
43	81-1280	16	Screw-HHF
44	52-2860	2	Washer
45	33103-025	2	Screw-HHF
46	322-5	1	Screw-HH
47	110-3986	1	Screw
48	131-3319-03	1	Bracket-Mount, Air Intake

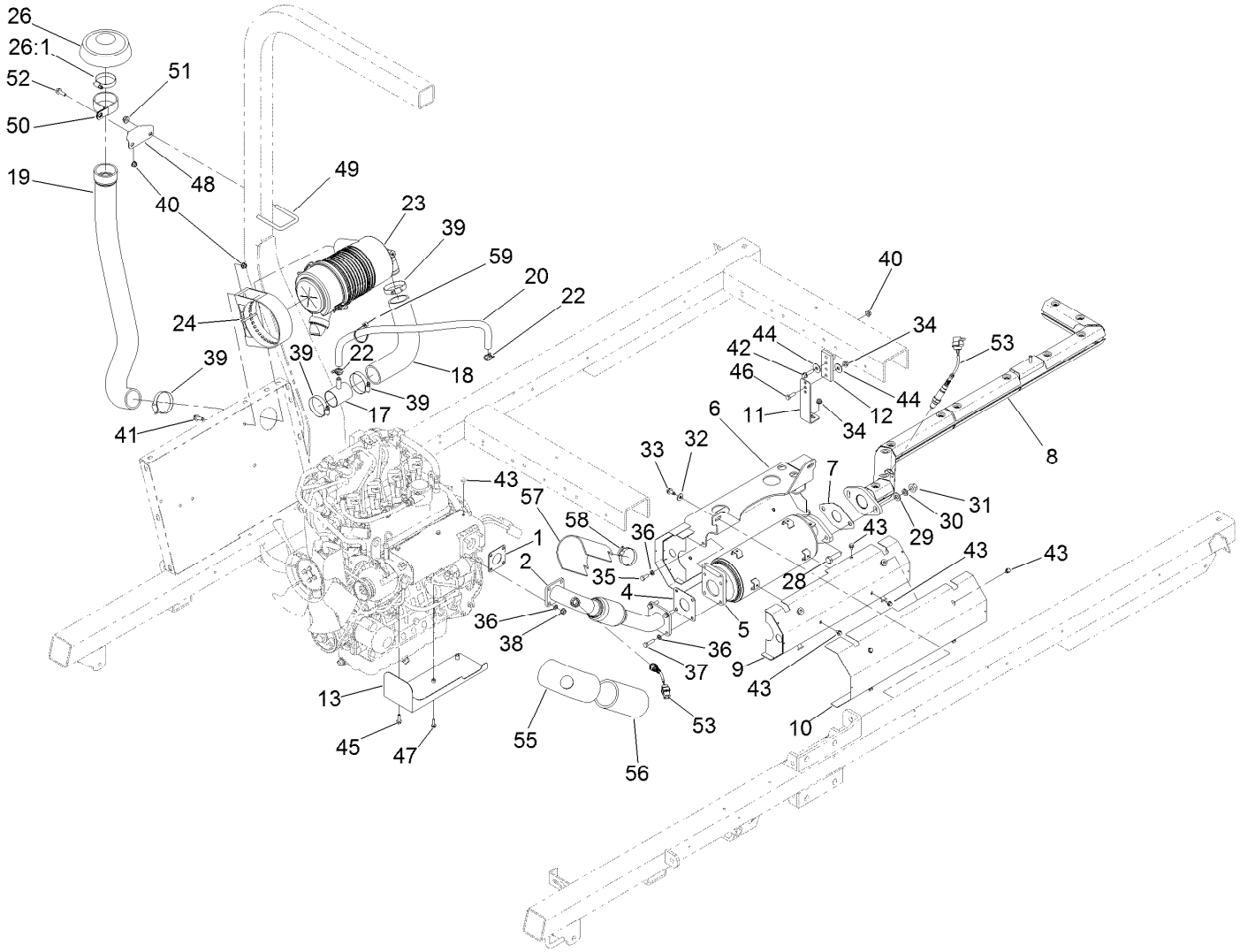

Muffler and Air Cleaner Assembly (continued)

Ref.	Part Number	Qty.	Description
49	47-3460	1	U-Bolt
50	2412-102	1	Clamp-R
51	104-8301	2	Nut-HF, NI
52	3234-29	1	Screw-HHF
53	120-3832	2	Sensor-Oxygen

Ref.	Part Number	Qty.	Description
55	131-9600	1	Jacket-Upper, Header
56	131-9601	1	Jacket-Lower, Header
57	131-9598	1	Shield-Composite
58	131-9613	1	Clamp-Band/Screw
59	3290-378	1	Tie-Cable

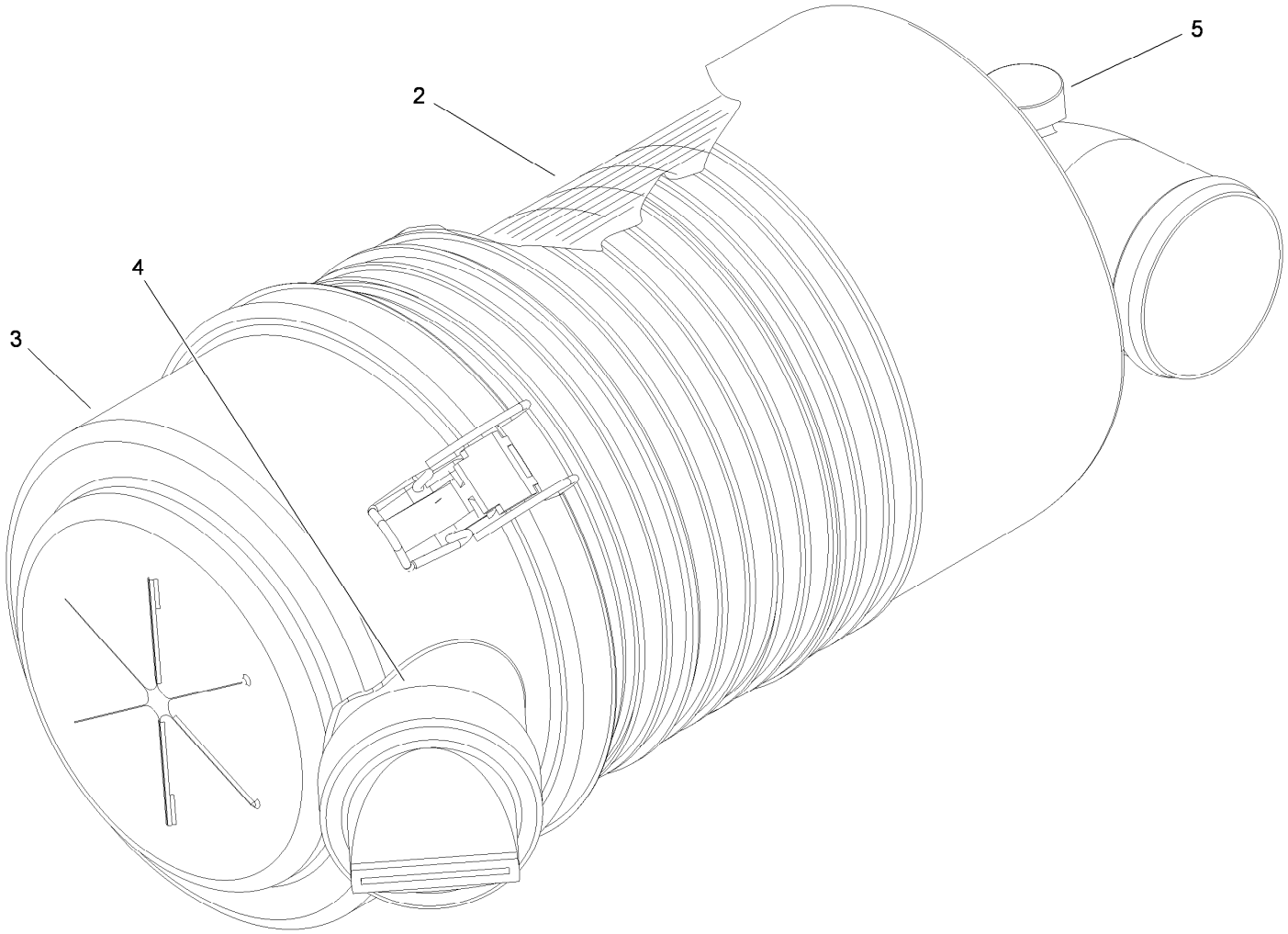

Air Cleaner Assembly No. 106-5277

Ref.	*Part Number*	*Qty.*	*Description*
2	108-3810	1	Filter-Air
3	98-9771	1	Cover ASM
4	87-9400	1	Valve-Vacuator
5	285-17	1	Plug-Pipe

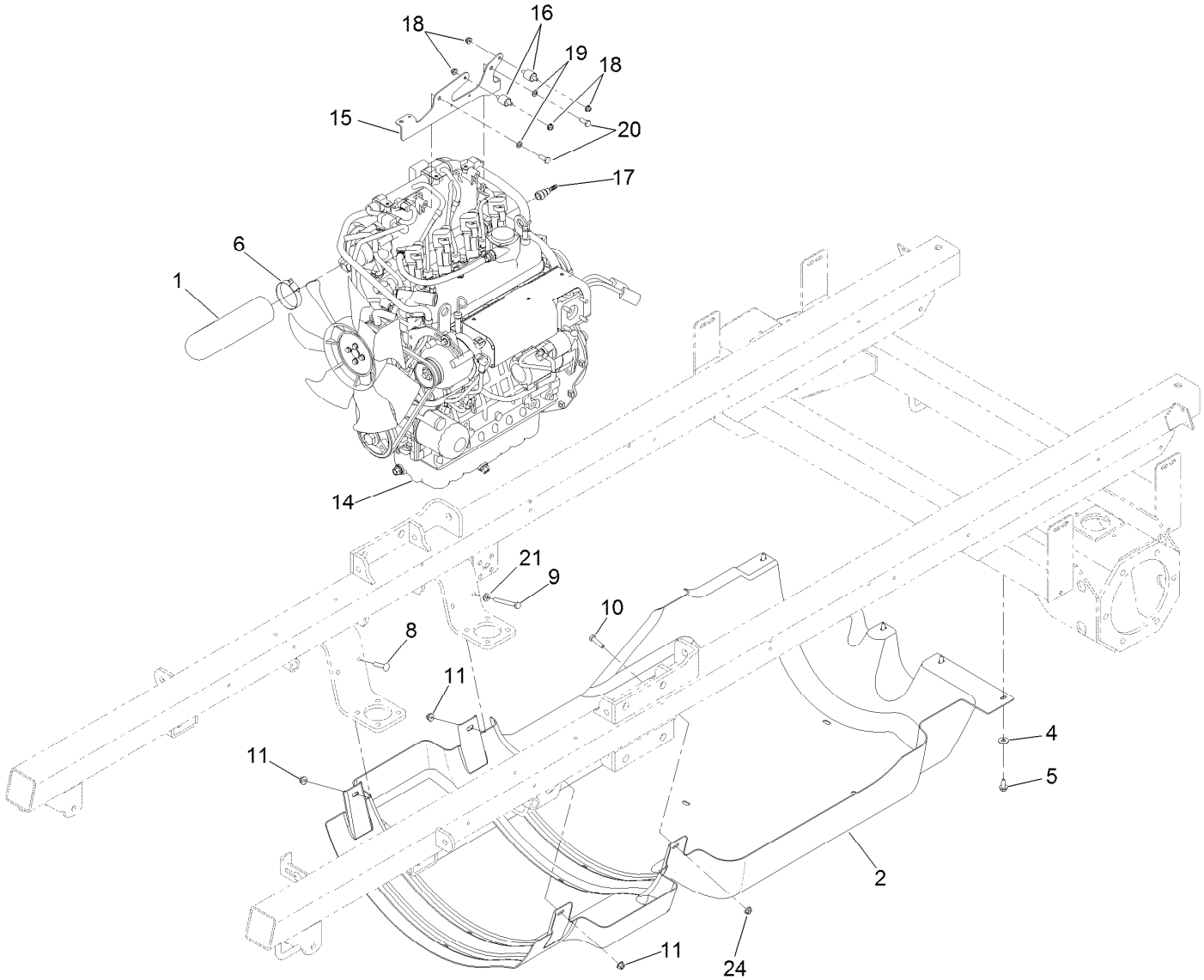

Engine and Shroud Assembly

Ref.	Part Number	Qty.	Description
1	120-3841	1	Hose-Cleaner, Air
2	130-7177	1	Shroud-Undercarriage
4	3256-3	5	Washer-Flat
5	32104-32	5	Screw-HWH
6	2412-130	1	Clamp-Hose
8	33-5790	1	Bolt-CARR
9	322-13	1	Screw-HH
10	322-6	2	Screw-HH
11	104-8300	4	Nut-HF, NI

Ref.	Part Number	Qty.	Description
14	133-2790	1	Engine-Kubota, Wg1605
15	132-7629-03	1	Mount-Box, Fuse
16	130-7174	2	Mount-Isolation
17	125-2921	1	Fitting-Fuel
18	104-7201	4	Nut-HF
19	3253-4	2	Washer-Lock
20	33114-020	2	Screw-HH
21	3256-23	1	Washer-Plain
24	32128-20	1	Nut-HF

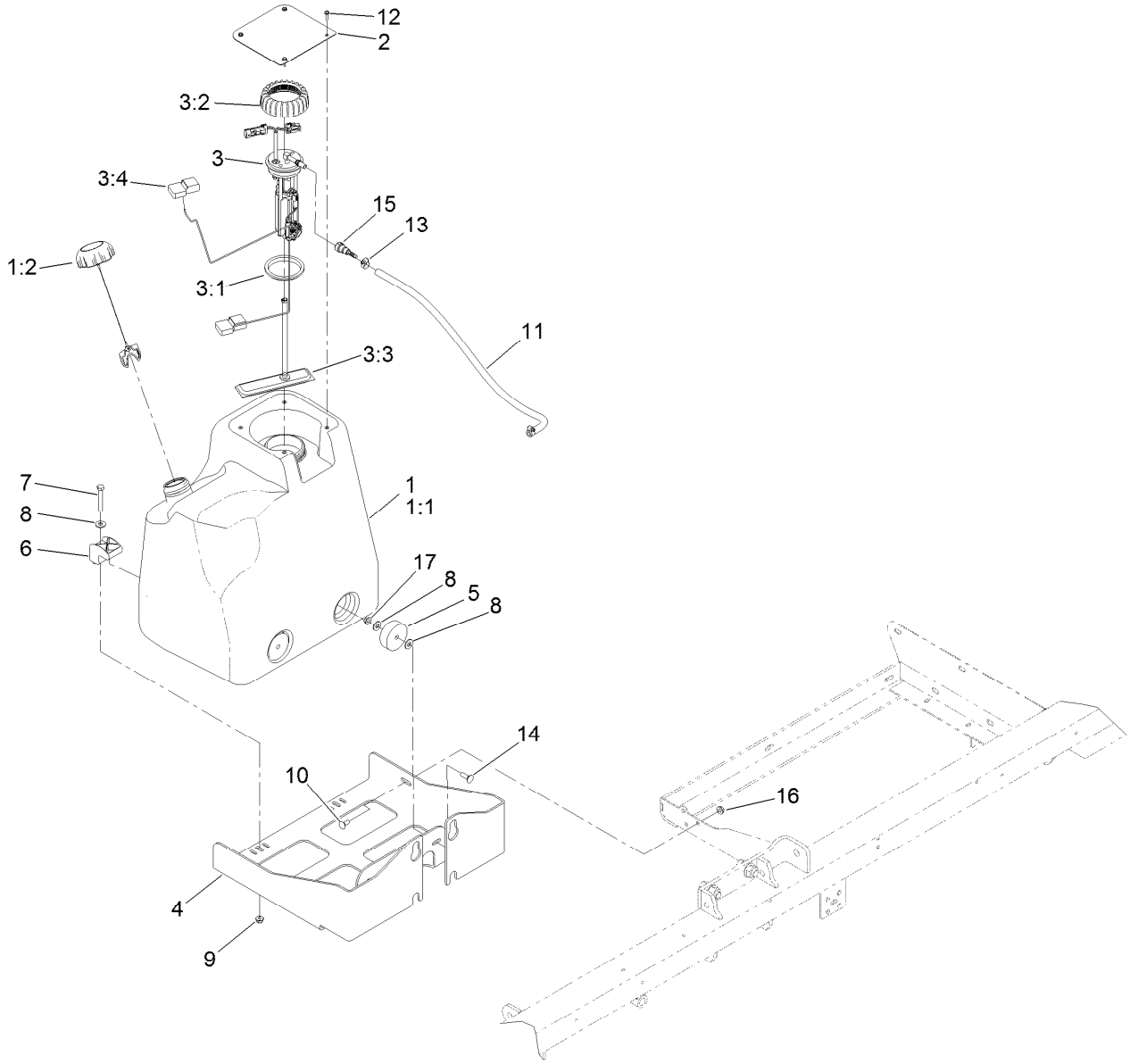

Fuel Tank Assembly

Ref.	Part Number	Qty.	Description
1	130-7105	1	Fuel Tank ASM
1:1	125-5872	1	Tank-Fuel
1:2	136-2266	1	Cap-Fuel, Dual Vent
2	127-8971-03	1	Cover-Tank, Fuel
3	121-5641	1	Pump-Fuel
3:1	115-2163	1	Gasket-Pump, Fuel
3:2	115-2162	1	Cap-Pump, Fuel
3:3	125-2902	1	Filter-Fuel
3:4	120-4812	1	Float
4	131-9550-03	1	Bracket-Tank, Fuel Tank
5	108-1605	2	Bumper-Recess
6	107-4543	2	Clamp

Ref.	Part Number	Qty.	Description
7	322-11	2	Screw-HH
8	3256-3	6	Washer-Flat
9	104-8300	2	Nut-HF, NI
10	3230-1	1	Bolt-CARR
11	121-6321	1	Hose-Fuel
12	98-1375	4	Screw-HWH
13	2412-36	2	Clamp-Hose
14	3230-2	2	Bolt-CARR
15	125-2921	1	Fitting-Fuel
16	32128-20	1	Nut-HF
17	32128-25	2	Nut-HF

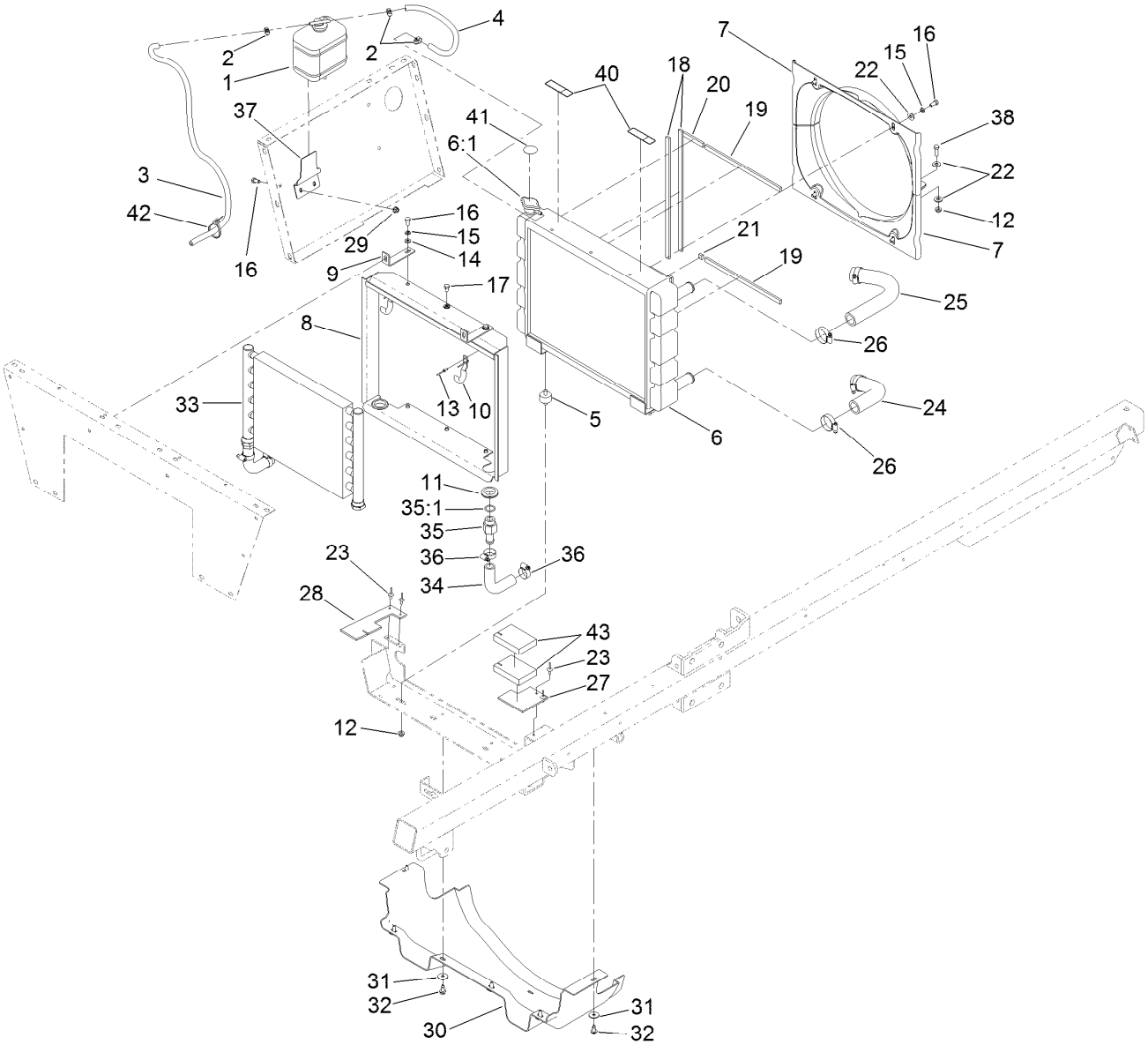

Radiator Assembly

Ref.	Part Number	Qty.	Description
1	108-0638	1	Bottle-Overflow
2	2412-108	3	Clamp-Worm
3	109-0309	1	Hose-Fuel
4	106-1126	1	Hose-Fuel
5	62-5480	2	Isolater-Seat
6	106-5291	1	Radiator
6:1	114-9593	1	Cap-Radiator
7	131-5779	2	Shroud-Fan
8	106-5180-03	1	Shroud-Radiator
9	106-5185	2	Brace-Radiator
10	75-0930	2	Hook-Mount, Cooler
11	240-3	2	Grommet-Rubber
12	32128-20	4	Nut-HF
13	3269-15	4	Rivet-Pop
14	3256-23	6	Washer-Plain
15	3253-4	10	Washer-Lock
16	322-3	4	Screw-HH
17	322-1	4	Screw-HH
18	107-8675	4	Seal-Foam
19	107-8676	2	Seal-Foam
20	107-8677	2	Seal-Foam

Ref.	Part Number	Qty.	Description
21	107-8678	2	Seal-Foam
22	3256-56	8	Washer-Flat
23	322-5	2	Screw-HH
23	3269-18	4	Rivet-Blind
24	119-4992	1	Hose-Radiator
25	106-5239	1	Hose-Radiator, Upper
26	2412-111	4	Clamp
27	136-2315	1	Baffle-Heat
28	119-5037	1	Baffle-Heat, RH
29	104-8300	2	Nut-HF, NI
30	119-9393	1	Shield-Front Heat, Engine
31	3256-82	6	Washer-Flat
32	32104-32	6	Screw-HWH
33	94-7007	1	Cooler-Oil
34	125-5880	2	Hose-Cooler, Oil
35	112-7835	2	Ftg-STR,Spcl
35:1	237-81	1	O-Ring
36	2412-129	4	Clamp-Hose
37	130-7102-03	1	Bracket-Reservoir
38	322-5	2	Screw-HH
40	120-0627	2	Decal-Warning

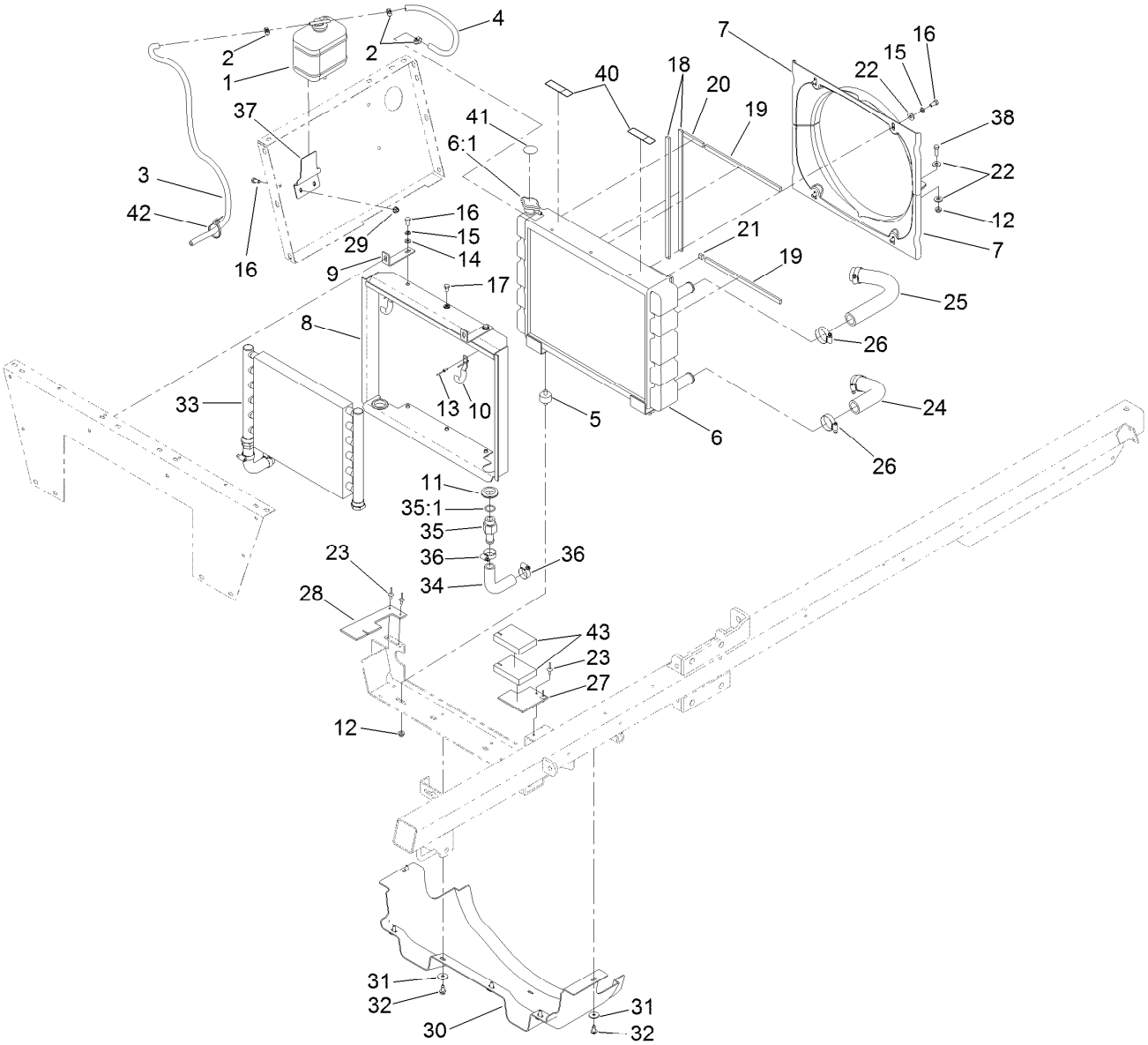

Radiator Assembly (continued)

Ref.	Part Number	Qty.	Description
41	106-6755	1	Decal-Cap, Radiator
42	3290-378	1	Tie-Cable
43	136-2316	2	Baffle-Foam

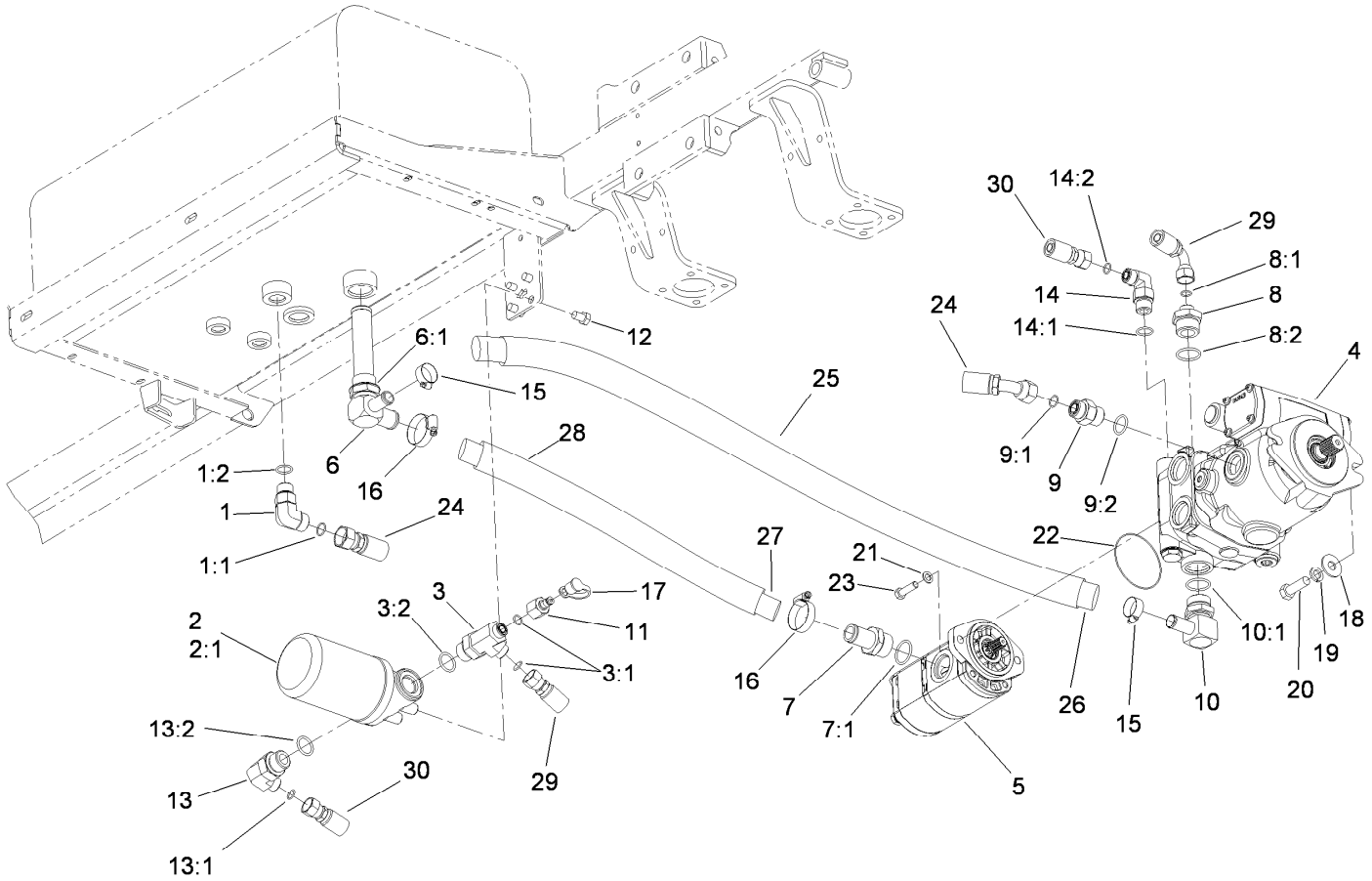

Hydraulic Pump and Filter Assembly

Ref.	Part Number	Qty.	Description
1	340-17	1	Fitting-Elbow, 90 DEG
1:1	237-65	1	O-Ring
1:2	237-80	1	O-Ring
2	93-2242	1	Filter-Oil
2:1	75-1310	1	Filter-HYD
3	117-0676	1	Fitting-Tee
3:1	237-30	2	O-Ring
3:2	237-81	1	O-Ring
4	117-0685	1	Piston Pump ASM
5	119-5038	1	Tandem Pump ASM
6	117-0684	1	Strainer-Tee
6:1	237-146	1	O-Ring
7	354-78	1	Fitting-STR
7:1	237-146	1	O-Ring
8	104-9178	1	Fitting-STR
8:1	237-30	1	O-Ring
8:2	237-146	1	O-Ring
9	340-8	1	Fitting-Straight
9:1	237-65	1	O-Ring
9:2	237-81	1	O-Ring
10	98-0971	1	Fitting-Elbow, 90

Ref.	Part Number	Qty.	Description
10:1	237-117	1	O-Ring
11	100-5616	1	Fitting
12	33115-016	4	Screw-HH
13	340-131	1	Fitting-HYD, 90 DEG
13:1	237-30	1	O-Ring
13:2	237-81	1	O-Ring
14	340-105	1	Fitting-Elbow, 90 DEG
14:1	237-80	1	O-Ring
14:2	237-30	1	O-Ring
15	2412-129	2	Clamp-Hose
16	2412-111	2	Clamp
17	354-79	1	Cap-Dust
18	3256-6	2	Washer-Flat
19	3253-7	2	Washer-Lock
20	325-6	2	Screw-HH
21	60-3540	2	Washer
22	60-3520	1	O-Ring
23	3274-1	2	Screw-HSH
24	112-2561	1	Hose-HYD
25	94-3688	1	Sleeve-Protective
26	119-5045	1	Hose-Suction

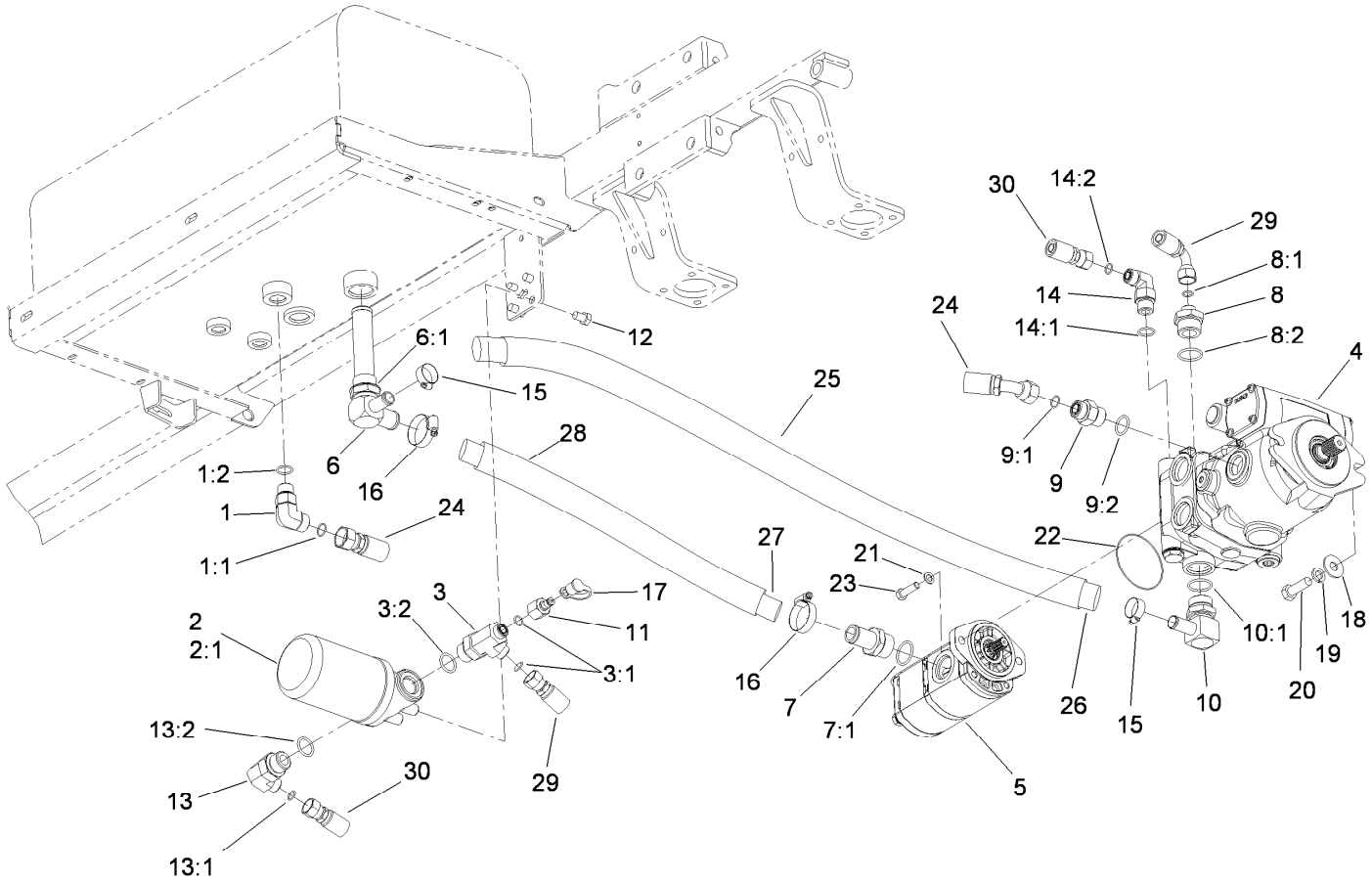

Hydraulic Pump and Filter Assembly (continued)

Ref.	Part Number	Qty.	Description
27	117-0681	1	Hose ASM
28	107-3589	1	Sleeve-Hose
29	117-0686	1	Hose-HYD
30	117-0729	1	Hose ASM

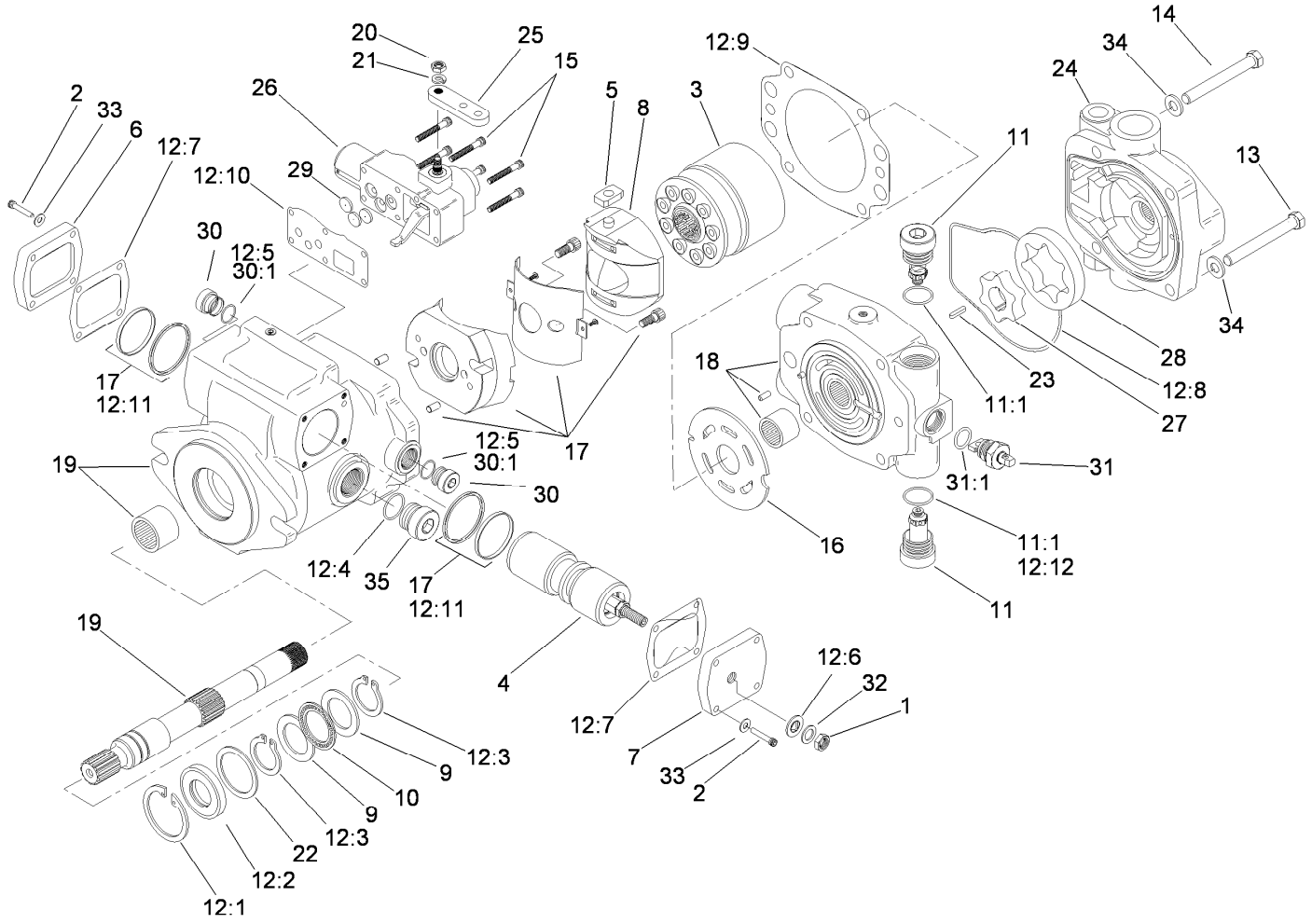

Piston Pump Assembly No. 117-0685

Ref.	Part Number	Qty.	Description
1	3220-3	1	Nut-HJ
2	93-6337	8	Screw
3	99-8701	1	Rotating Kit
4	105-2856	1	Piston-Servo
5	94-3032	1	Follower-Piston
6	94-3033	1	Plate-Cover
7	105-9853	1	Plate-Cover
8	94-3026	1	Camplate ASM
9	76-6950	2	Race-Thrust
10	76-6960	1	Bearing-Thrust
11	105-2858	2	Valve-Relief
11:1		1	O-Ring ■
12	107-1561	1	Seal Kit ●
12:1	60-6260	1	Ring
12:2	105-3331	1	Seal-Shaft
12:3	76-7000	2	Ring-Retaining
12:4		2	O-Ring ■
12:5	93-6314	2	O-Ring ●

Ref.	Part Number	Qty.	Description
12:6	94-3027	1	Washer-Seal
12:7	93-6339	2	Gasket
12:8	105-2905	1	O-Ring ●
12:9	105-2900	1	Gasket-Housing
12:10	105-2901	1	Gasket-Housing, Control
12:11		2	Seal ASM ■
12:12	74-9380	1	O-Ring ●
13	323-15	2	Screw-HH
14	323-16	2	Screw-HH
15	93-6324	6	Screw
16	99-8704	1	Plate-Valve
17		1	Housing ■
18	105-2904	1	Backplate
19	93-6344	1	Driveshaft
20	3217-5	1	Nut-Hex
21	3253-3	1	Washer-Lock
22	60-6240	1	Washer
23	93-6375	1	Key

● Not illustrated

■ Not serviced separately

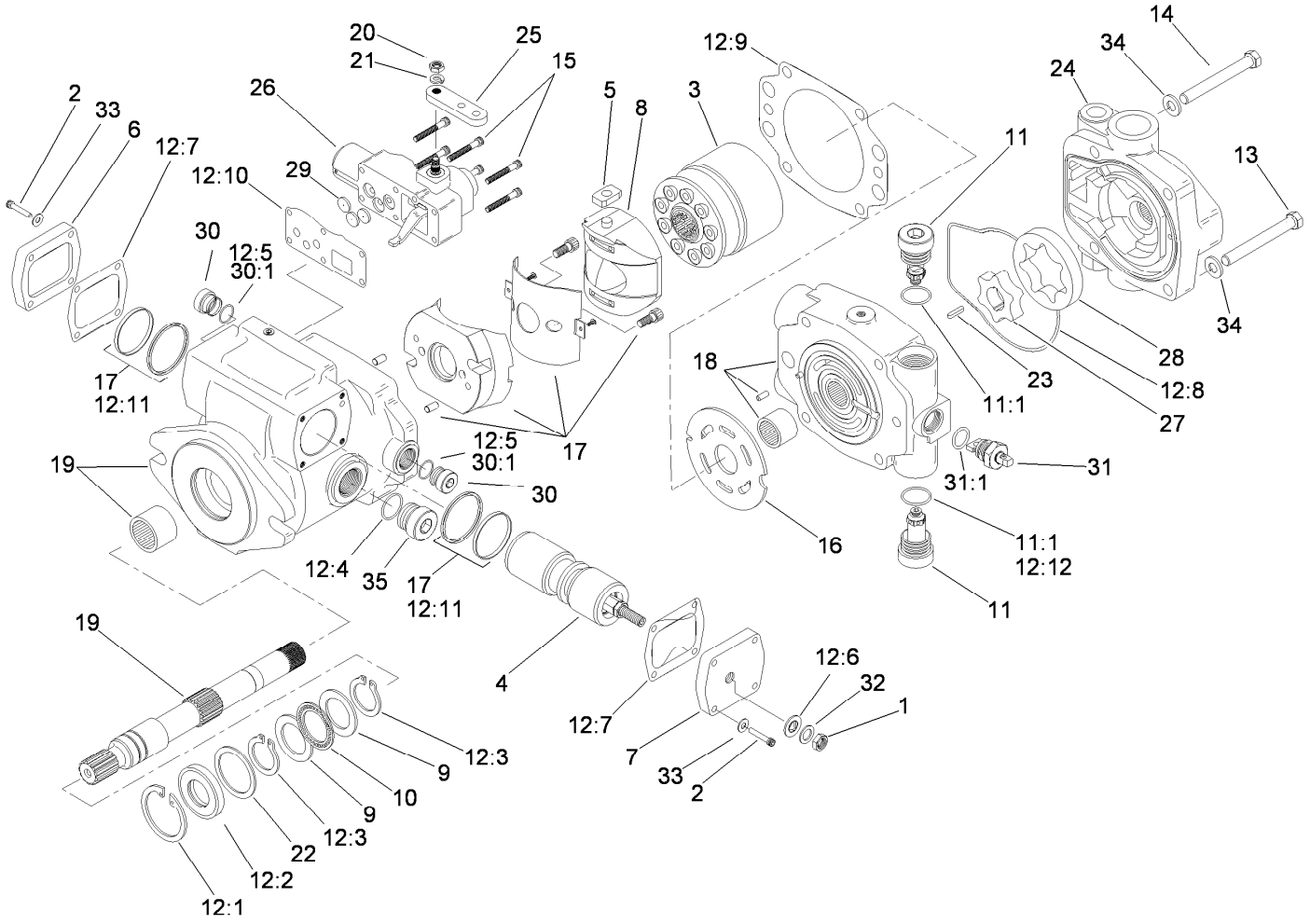

Piston Pump Assembly No. 117-0685 (continued)

Ref.	Part Number	Qty.	Description
24	95-2110	1	Adaptor
25	105-2862	1	Arm-Control
26	115-4446	1	Control-Servo, Manual
27	93-6365	1	Geroter-Inner
28	93-6364	1	Geroter-Outer
29	94-3041	3	Orifice-Control (.028 DIA)
30	74-9280	2	Plug ASM

Ref.	Part Number	Qty.	Description
30:1		1	O-Ring ■
31	105-2913	1	Valve-Bypass
31:1		1	O-Ring ■
32	94-3030	1	Washer
33	93-6336	8	Washer
34	3256-24	4	Washer-Flat
35		1	Plug ASM ■

● Not illustrated

■ Not serviced separately

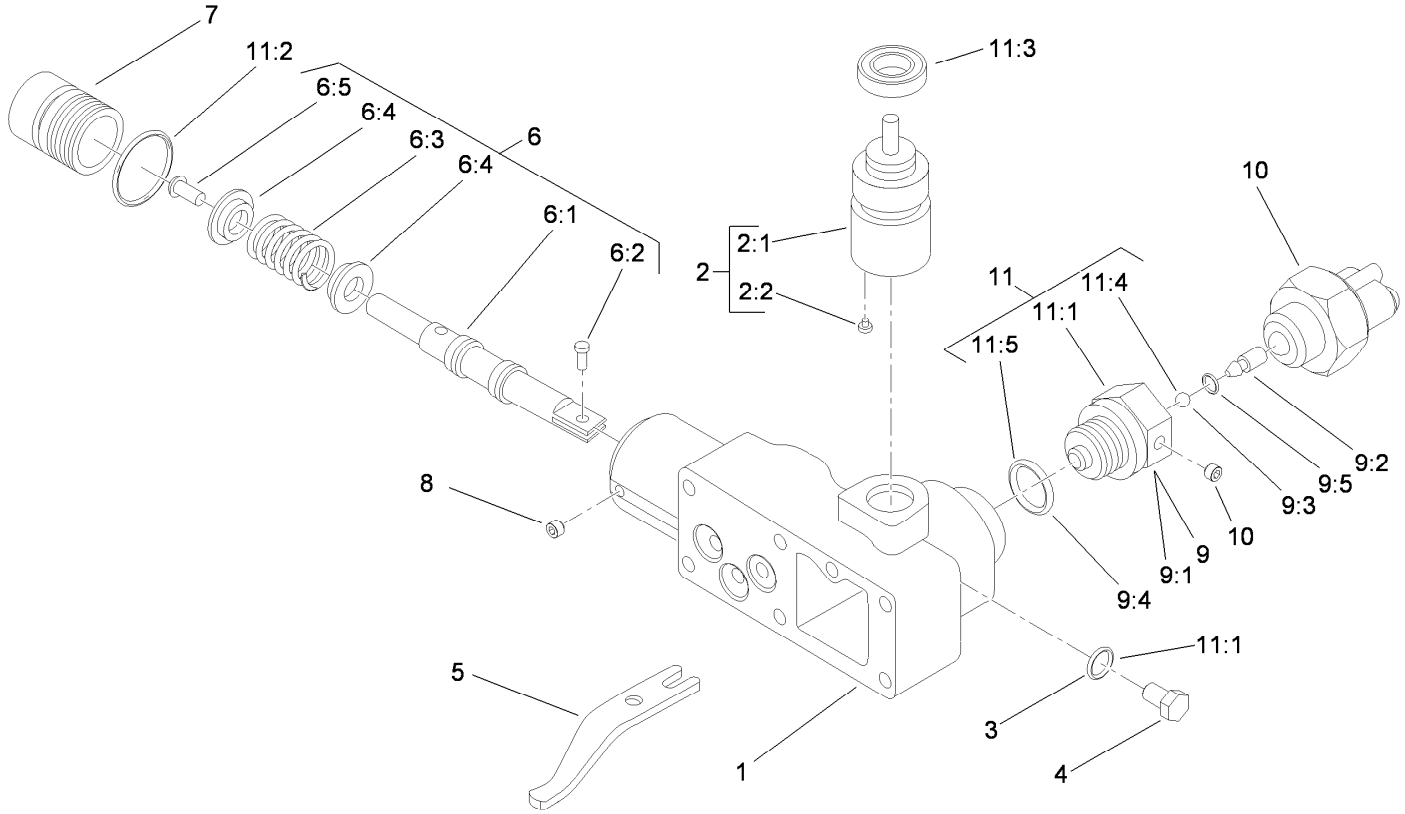

Control Assembly No. 115-4446

Ref.	Part Number	Qty.	Description
1		1	Housing-Control ●
2	108-7099	1	Input Control Shaft ASM
2:1		1	Shaft ●
2:2		1	Pin ●
3		1	O-Ring ●
4		1	Plug ●
5		1	Link-Feedback ●
6	108-7098	1	Valve Spool ASM
6:1		1	Valve-Spool ●
6:2		1	Pin-Dowel ●
6:3		1	Spring ●
6:4		2	Retainer ●
6:5		1	Screw ●
7		1	Plug ●

Ref.	Part Number	Qty.	Description
8		2	Screw-Set ●
9	108-8003	1	Adaptor ASM
9:1		1	Adaptor-Lockout, Neutral ●
9:2		1	Pin ●
9:3		1	Ball ●
9:4		1	O-Ring ●
9:5		1	O-Ring ●
10	115-3795	1	Switch-Neutral
11	94-3044	1	Seal Kit
11:1	117-8979	1	Seal-Shaft
11:2	105-2901	1	Gasket-Housing, Control
11:3		1	O-Ring ●
11:4		1	O-Ring ●
11:5		1	Seal-Wiper ●

● Not serviced separately

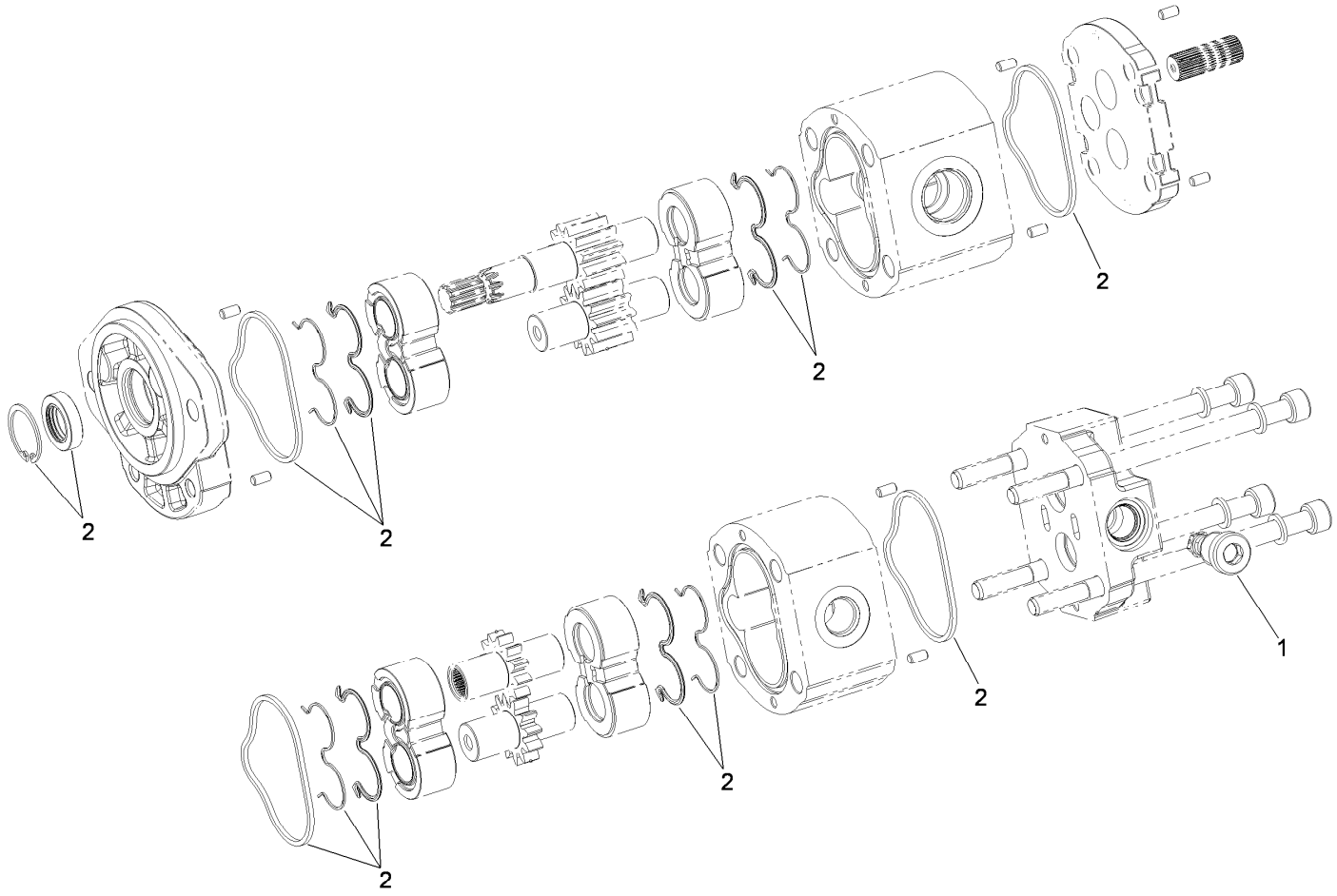

Tandem Pump Assembly No. 119-5038

Ref.	*Part Number*	*Qty.*	*Description*
1	120-5156	1	Valve-Relief
2	120-5155	1	Seal Kit

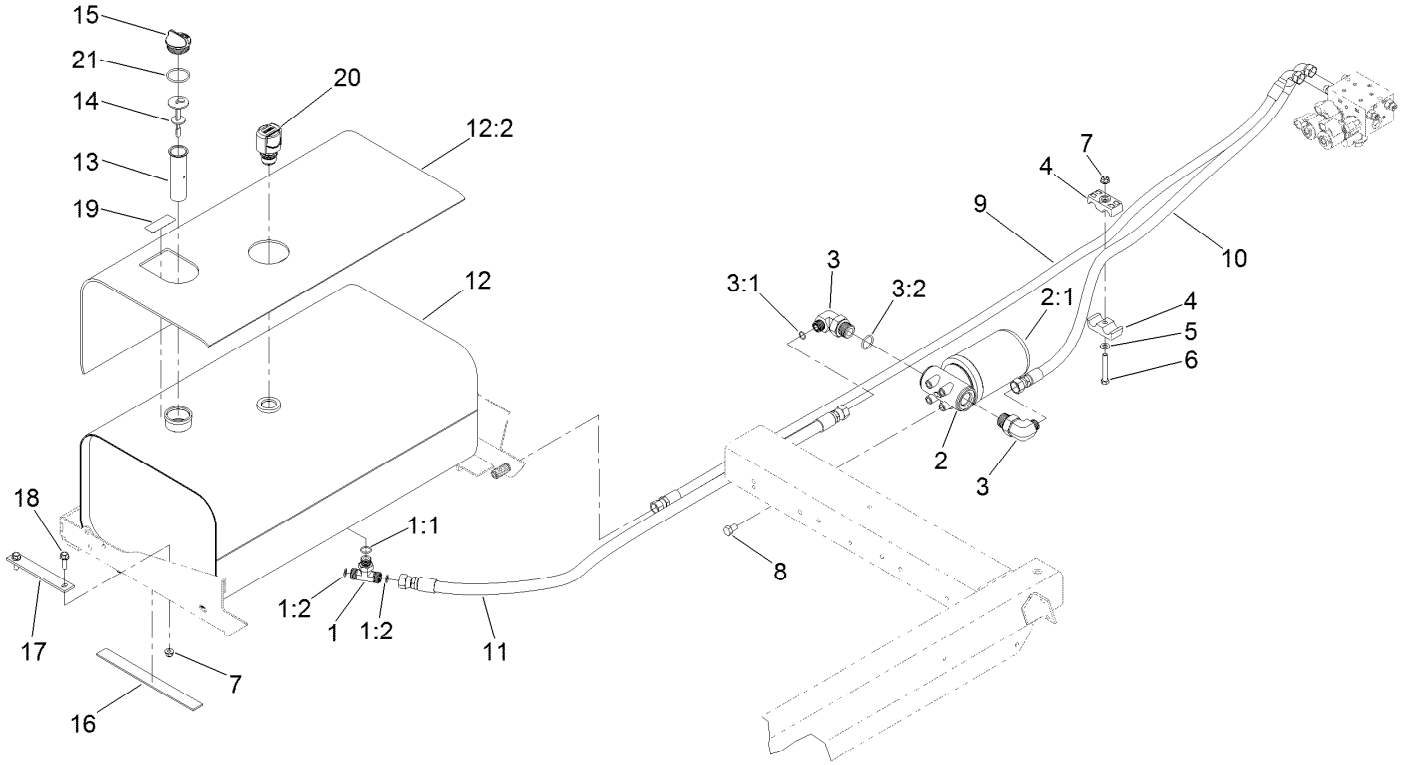

Hydraulic Tank Assembly

Ref.	Part Number	Qty.	Description
1	340-157	1	Fitting-HYD, Tee
1:1	237-79	1	O-Ring
1:2	237-30	2	O-Ring
2	93-2242	1	Filter-Oil
2:1	75-1310	1	Filter-HYD
3	340-131	2	Fitting-HYD, 90 DEG
3:1	237-30	1	O-Ring
3:2	237-81	1	O-Ring
4	94-8105	2	Clamp-Tube
5	3256-23	1	Washer-Plain
6	322-11	1	Screw-HH
7	104-8300	5	Nut-HF, NI
8	33115-016	4	Screw-HH
9	119-0588	1	HYD Hose ASM
10	119-0587	1	HYD Hose ASM
11	106-3672	1	HYD Hose ASM
12	131-5799	1	Hydraulic Tank ASM
12:2	131-5787	1	Cover-Tank, Hydraulic
13	92-1705	1	Filter-Screen
14	105-2812	1	Dipstick
15	93-7498	1	Plug-Plastic
16	41995	2	Strip-Armaflex
17	94-7068-03	2	Strap-Hold Down
18	3234-17	4	Screw-HHF
19	93-6686	1	Decal-Oil, HYD
20	115-9793	1	Breather
21	237-101	1	O-Ring

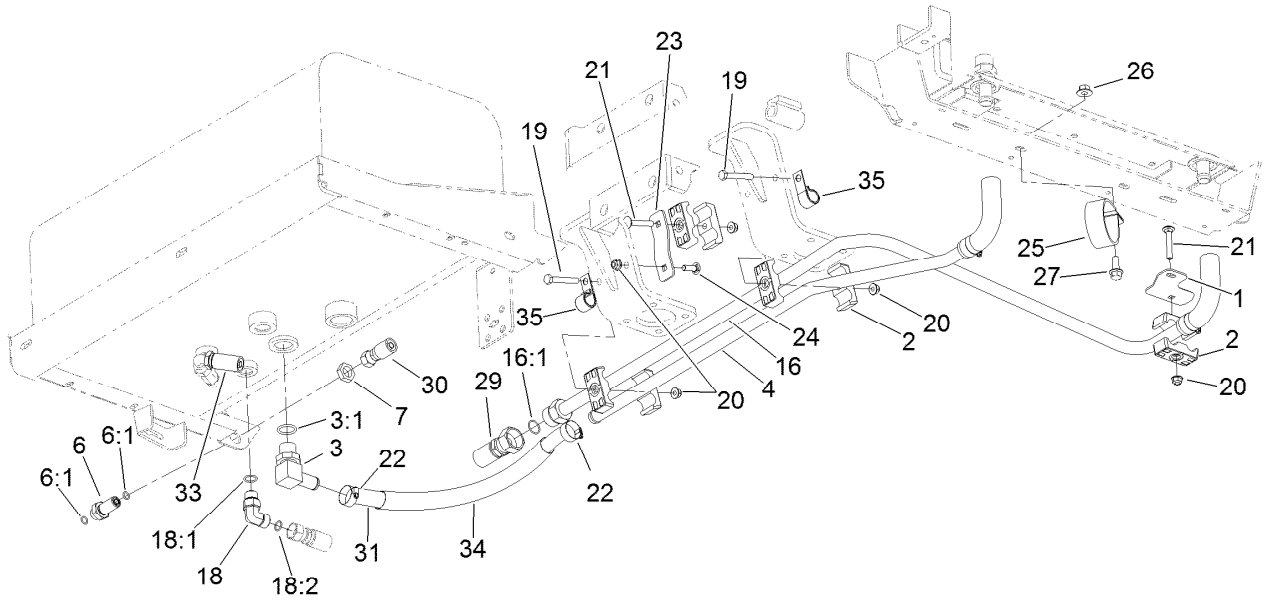

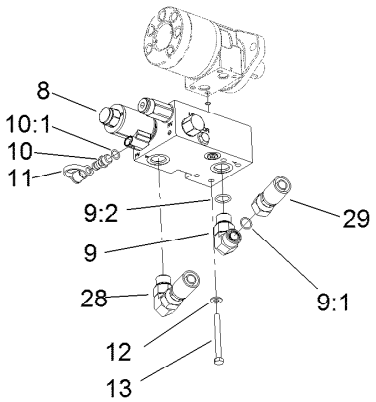

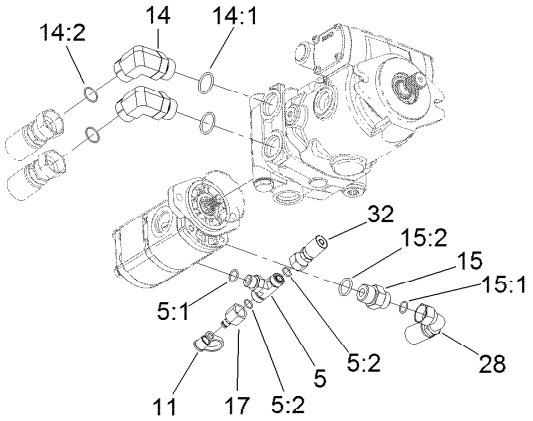

Hydraulic Pump and Filter Assembly

Ref.	Part Number	Qty.	Description
1	117-0723	1	Plate-Mount, Tube Clamp
2	94-8105	10	Clamp-Tube
3	353-987	1	Fitting-Elbow, 90
3:1	237-81	1	O-Ring
4	117-0693	1	Hydraulic Tube
5	340-157	1	Fitting-HYD, Tee
5:1	237-79	1	O-Ring
5:2	237-30	2	O-Ring
6	340-71	1	Fitting-Straight, Bulkhead
6:1	237-22	2	O-Ring
7	340-70	1	Nut-Lock
8	117-0708	1	Pump Control Valve ASM
9	340-17	2	Fitting-Elbow, 90 DEG
9:1	237-65	1	O-Ring
9:2	237-80	1	O-Ring
10	59-7410	1	Fitting-Diagnostic
10:1	237-42	1	O-Ring
11	354-79	2	Cap-Dust
12	3256-23	4	Washer-Plain
13	322-14	4	Screw-HH
14	340-129	2	Fitting-Elbow, 90 DEG

Ref.	Part Number	Qty.	Description
14:1	237-146	1	O-Ring
14:2	340-65	1	O-Ring
15	340-8	1	Fitting-Straight
15:1	237-65	1	O-Ring
15:2	237-81	1	O-Ring
16	125-5854	1	Tube ASM
16:1	237-58	1	O-Ring
17	100-5616	1	Fitting
18	340-98	1	Fitting-Elbow, 90 DEG
18:1	237-79	1	O-Ring
18:2	237-30	1	O-Ring
19	322-11	2	Screw-HH
20	104-8300	7	Nut-HF, NI
21	3230-6	3	Screw-CARR
22	2412-129	2	Clamp-Hose
23	117-0689	2	Plate-Mount, Tube Clamps
24	3230-22	2	Screw-CARR
25	2412-102	1	Clamp-R
26	32128-43	1	Nut-Flange
27	3234-11	1	Screw-HHF
28	117-0680	1	Hose ASM

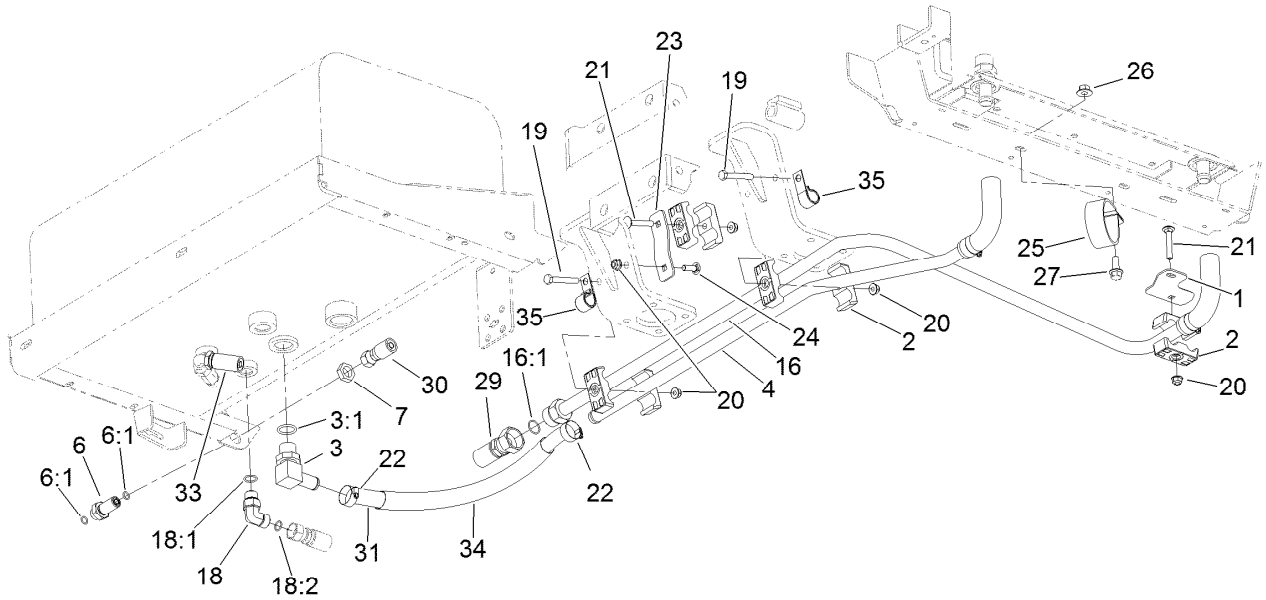

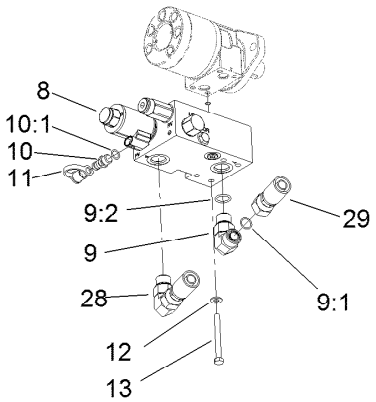

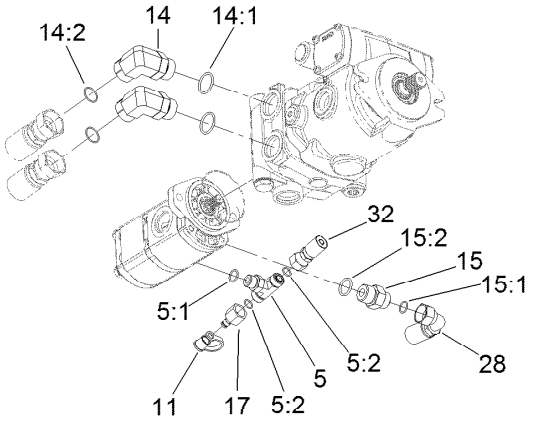

Hydraulic Pump and Filter Assembly (continued)

Ref.	Part Number	Qty.	Description
29	117-0682	1	Hose ASM
30	119-0583	1	Hose ASM
31	119-5045	1	Hose-Suction
32	117-0687	1	Hose ASM
33	125-5853	1	HYD-Hose
34	94-3688	1	Sleeve-Protective
35	94-9580	2	Clamp-J

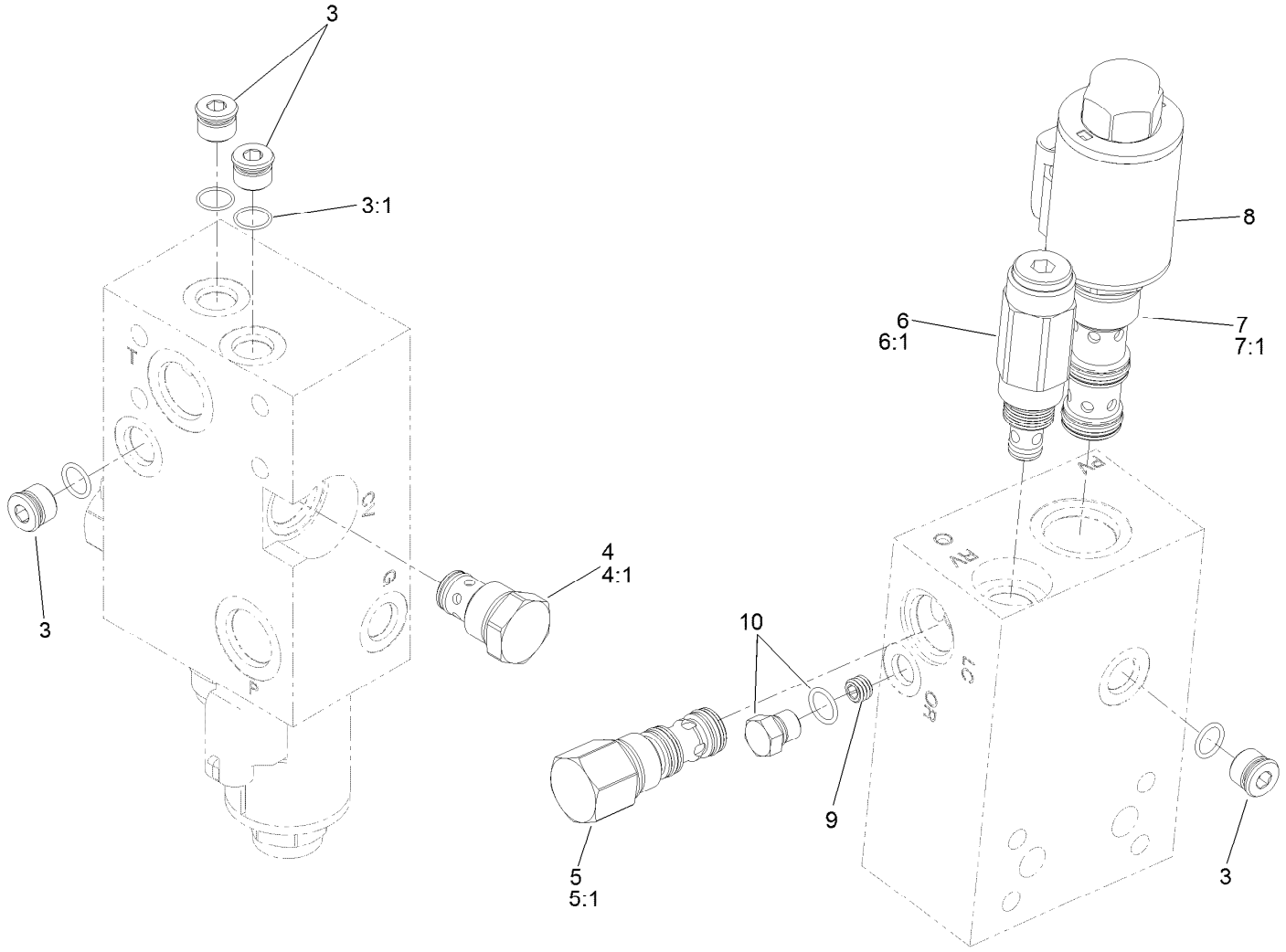

Pump Control Valve Assembly No. 117-0708

Ref.	*Part Number*	*Qty.*	*Description*
3	353-512	4	Plug
3:1	237-78	1	O-Ring
4	110-8881	1	Valve-Check
4:1	105-9159	1	Seal Kit ●
5	120-1660	1	Compensator-Pressure
5:1	107-7813	1	Seal Kit ●
6	117-8312	1	Valve-Relief
6:1	105-9156	1	Seal Kit
7	120-2590	1	Valve-Flow Control
7:1	114-5515	1	Seal Kit
8	120-2589	1	Coil-12Vdc
9	107-1987	1	Orifice-0.040
10	117-0115	1	Plug

● Not illustrated

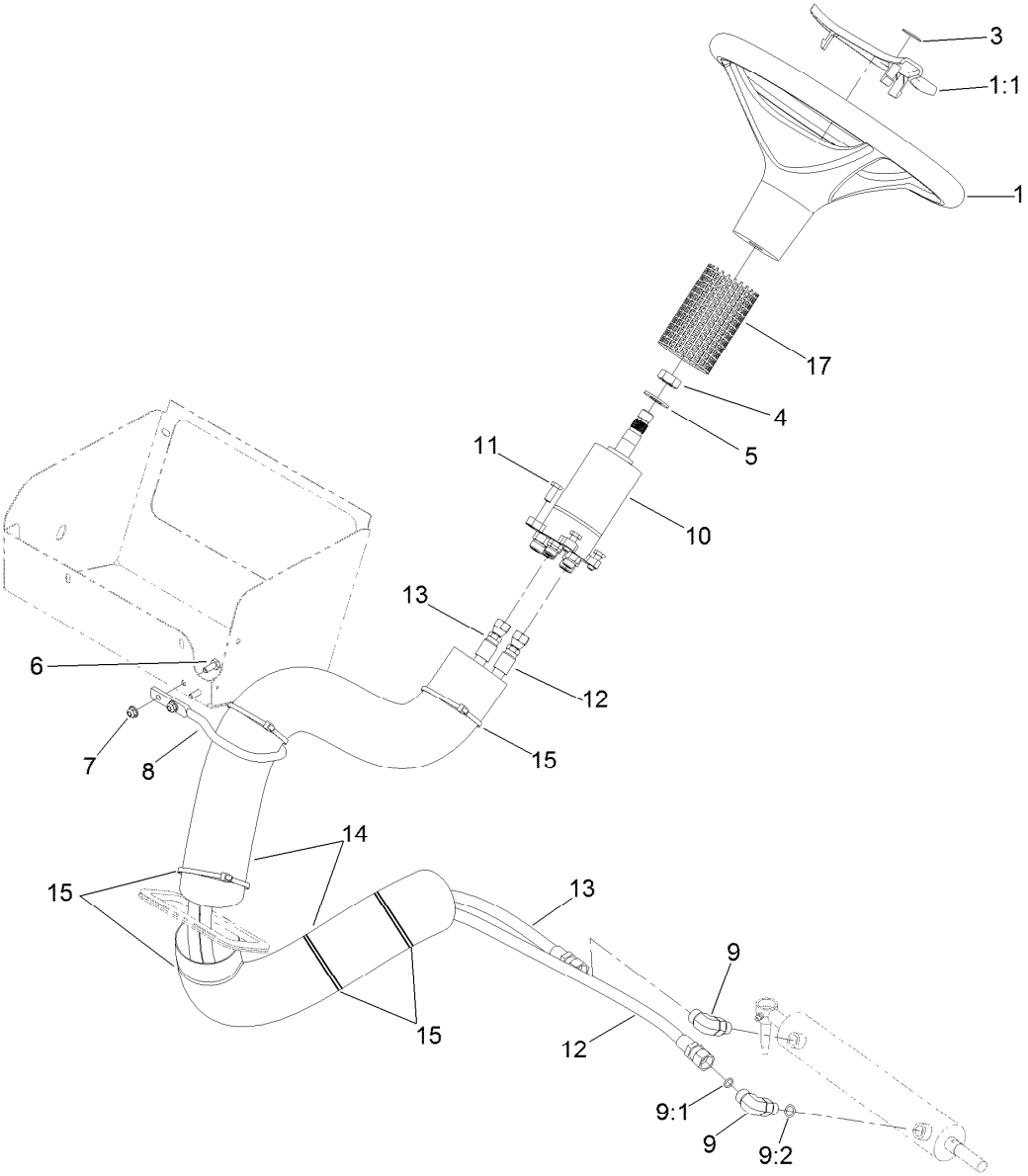

Steering Hydraulic Assembly

Ref.	Part Number	Qty.	Description
1	98-1471	1	Wheel-Steering
1:1	98-1468	1	Cover-Wheel, Steering
3	98-1459	1	Decal
4	3296-33	1	Nut-Lock, NI
5	3256-27	1	Washer-Flat
6	321-3	2	Screw-HH
7	104-7201	2	Nut-HF
8	119-4853	1	Guide-Hose
9	340-77	2	Fitting-Elbow, 90 DEG

Ref.	Part Number	Qty.	Description
9:1	237-22	1	O-Ring
9:2	237-42	1	O-Ring
10	117-0707	1	Steering Valve ASM
11	33114-020	4	Screw-HH
12	117-0717	1	Hose ASM
13	117-0688	1	Hose ASM
14	106-6713	2	Cover-Lines, Steering
15	3290-379	7	Tie-Cable
17	130-8296	1	Sleeve-Steering Cover

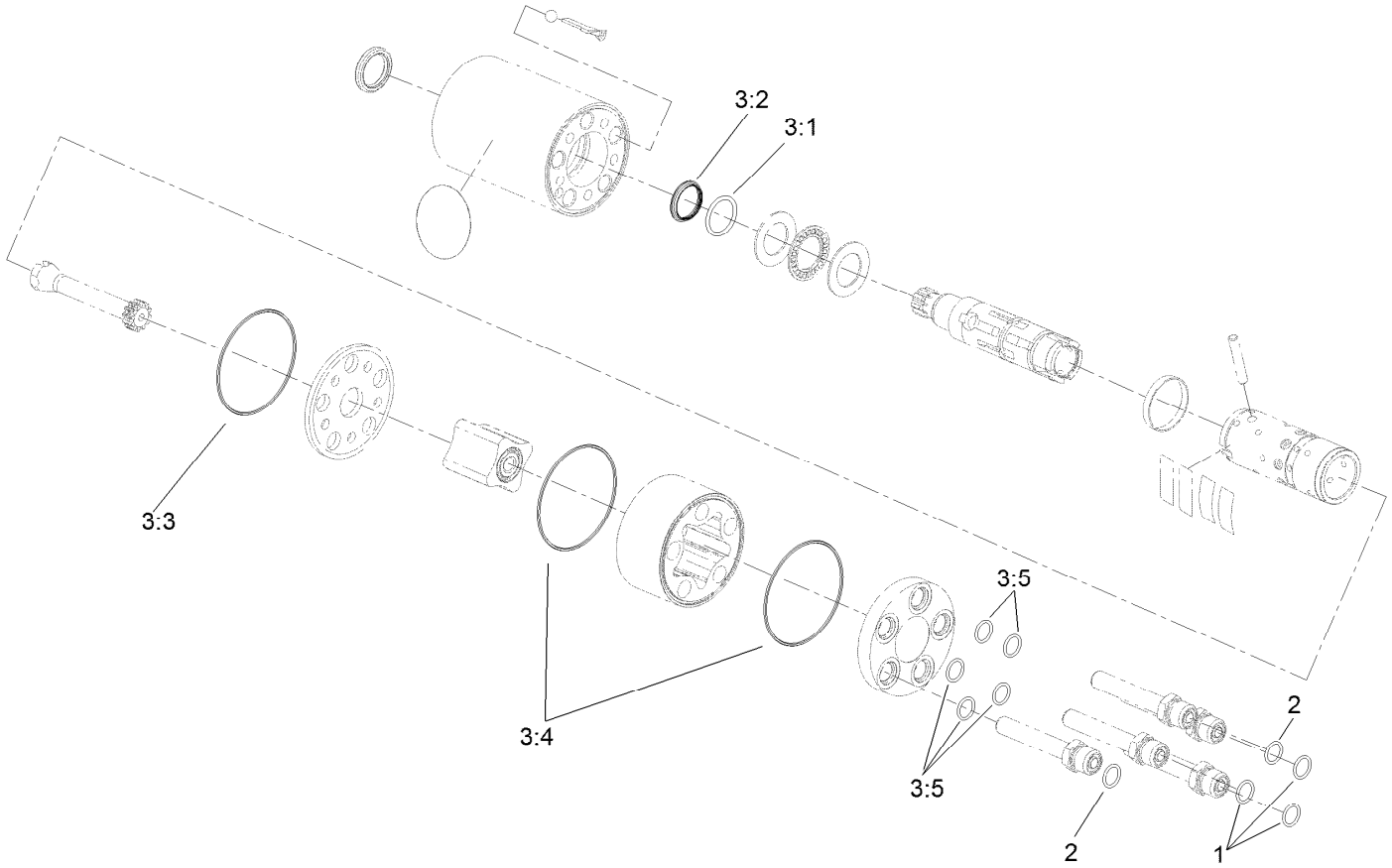

Steer Valve Assembly No. 117-0707

Ref.	*Part Number*	*Qty.*	*Description*
1	237-21	3	O-Ring
2	237-22	2	O-Ring
3	106-6716	1	Seal Kit ●
3:1		1	Ring-Seal, Dust ■
3:2		1	Seal-Shaft ■
3:3		1	O-Ring ■
3:4		2	O-Ring ■
3:5		5	O-Ring ■

● Not illustrated

■ Not serviced separately

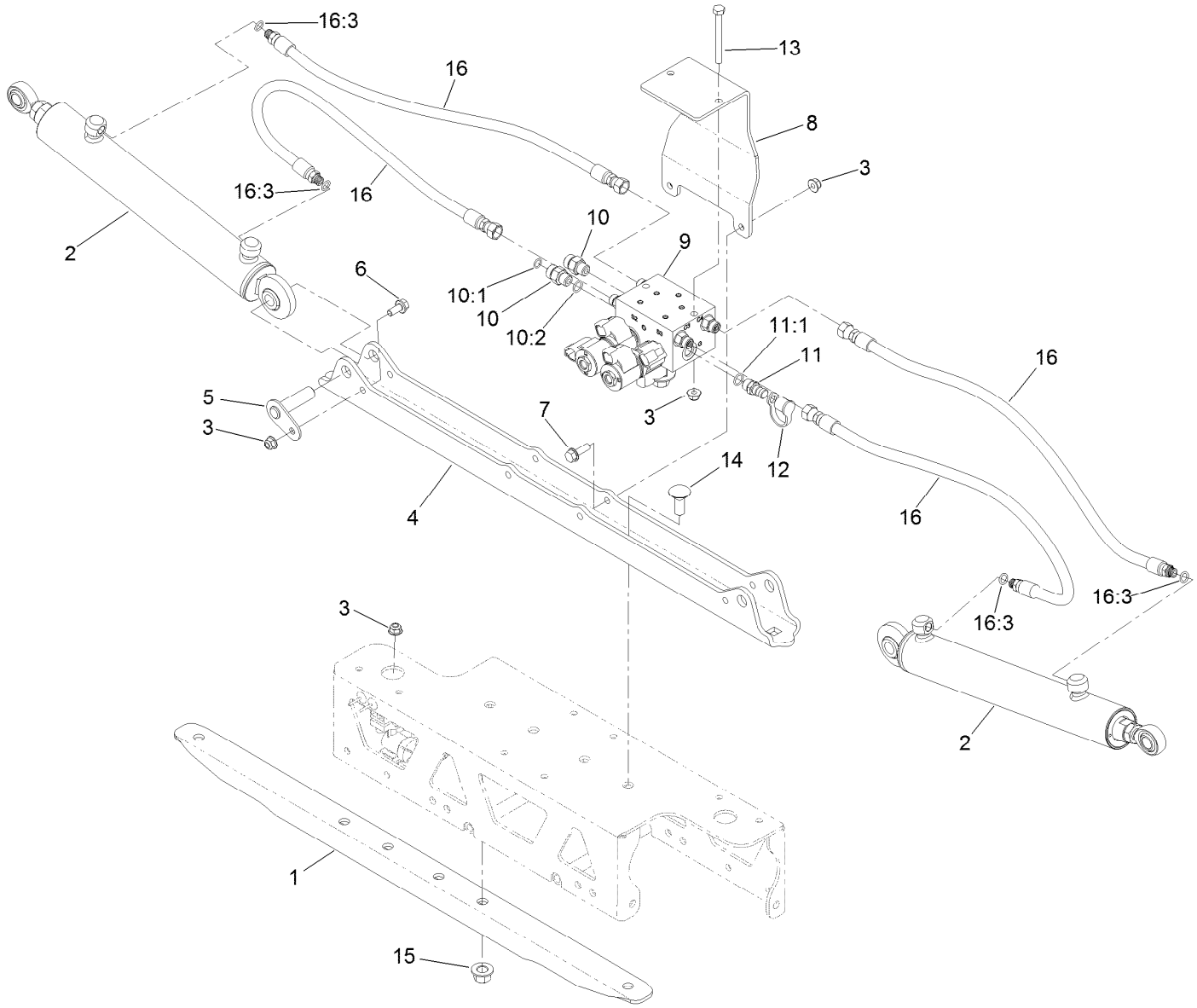

Boom Lift Assembly

Ref.	Part Number	Qty.	Description
1	131-0285-03	1	Stiffener-Channel
2	117-0701	2	Hydraulic Cylinder ASM
3	104-8300	7	Nut-HF, NI
4	131-0275-03	1	Plate-Mount
5	112-7884	2	Pin-Pivot
6	110-5053	2	Screw-HHF
7	3234-29	2	Screw-HHF
8	130-8201-03	1	Mount-Valve
9	117-0702	1	On-Off Boom Lift Valve ASM
10	340-2	2	Fitting-Straight

Ref.	Part Number	Qty.	Description
10:1	237-22	1	O-Ring
10:2	237-42	1	O-Ring
11	59-7410	1	Fitting-Diagnostic
11:1	237-42	1	O-Ring
12	354-79	1	Cap-Dust
13	322-14	2	Screw-HH
14	110-5067	4	Screw-CARR
15	99-5107	4	Nut-Lock
16	131-0276	4	Hose ASM
16:3	237-78	1	O-Ring

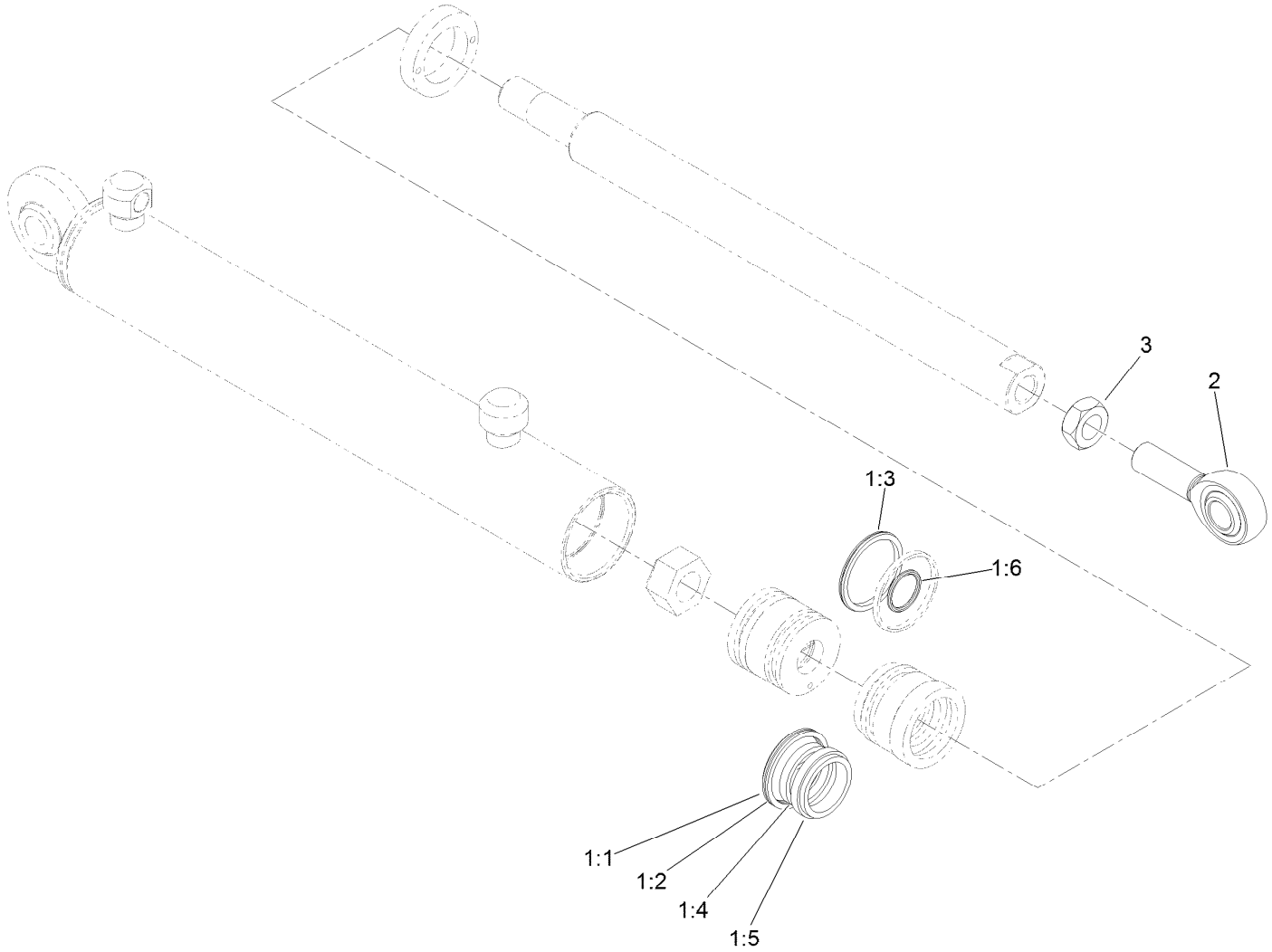

Hydraulic Cylinder Assembly No. 117-0701

Ref.	*Part Number*	*Qty.*	*Description*
1	119-8026	1	Seal Kit ●
1:1		1	O-Ring ■
1:2		1	Ring-Backup ■
1:3		1	Bp Seal ■
1:4		1	Bs Seal ■
1:5		1	Dust Seal ■
1:6		1	O-Ring ■
2	119-8027	1	Rod End
3	3220-6	1	Nut-Jam

● Not illustrated

■ Not serviced separately

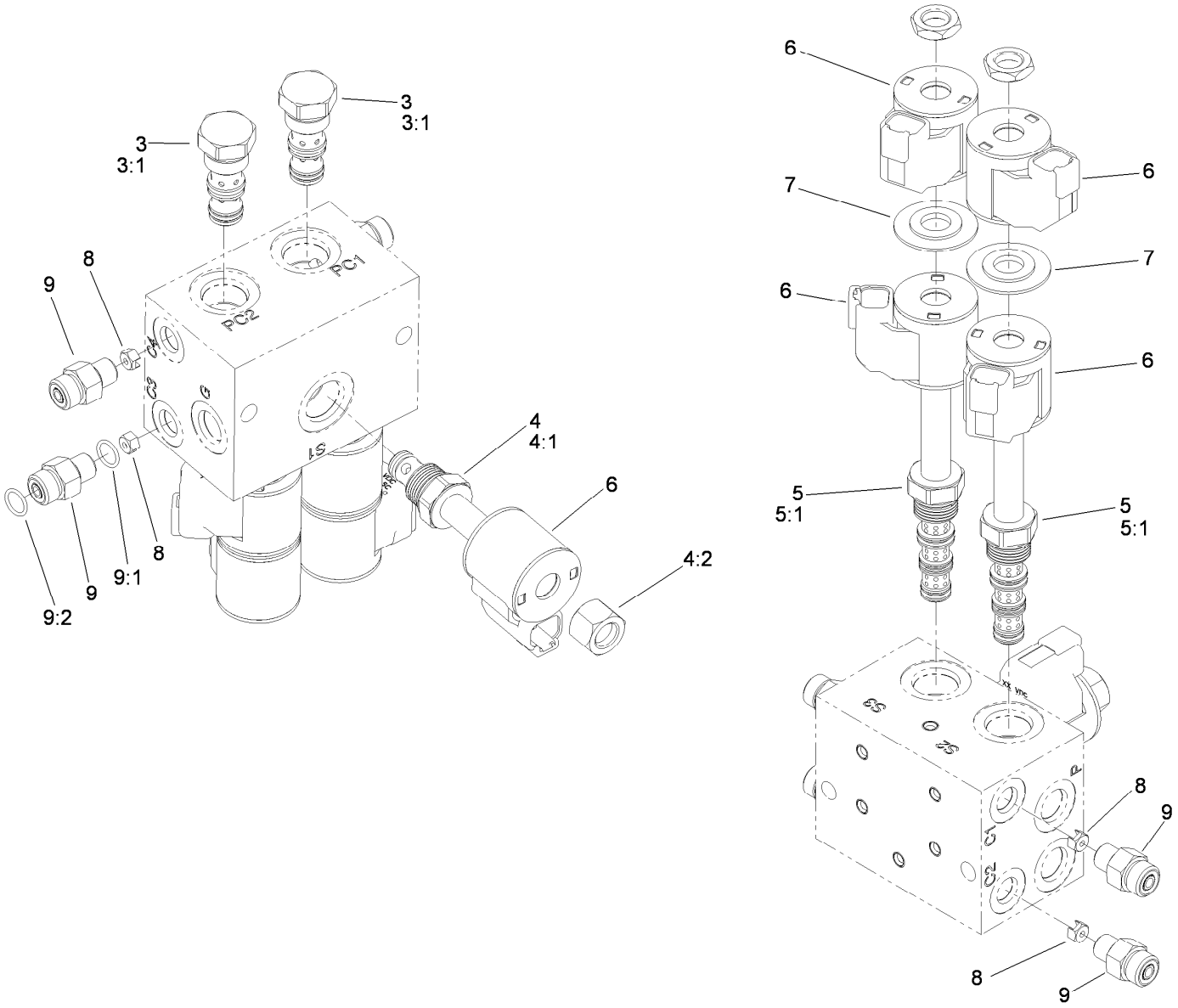

On-Off Boom Lift Valve No. 117-0702

Ref.	*Part Number*	*Qty.*	*Description*
3	120-2588	2	Valve-Check
3:1	120-0886	1	Seal Kit ●
4	107-7517	1	Valve-Solenoid
4:1	105-9156	1	Seal Kit
4:2	107-7812	1	Nut-Solenoid
5	120-2587	2	Valve-Solenoid
5:1	112-6520	1	Seal Kit ●
6	119-8036	5	Coil
7	120-2586	2	Spacer-Coil
8	120-2585	4	Orifice, .035
9	340-92	4	Fitting-Straight
9:1	237-78	1	O-Ring
9:2	237-21	1	O-Ring

● Not illustrated

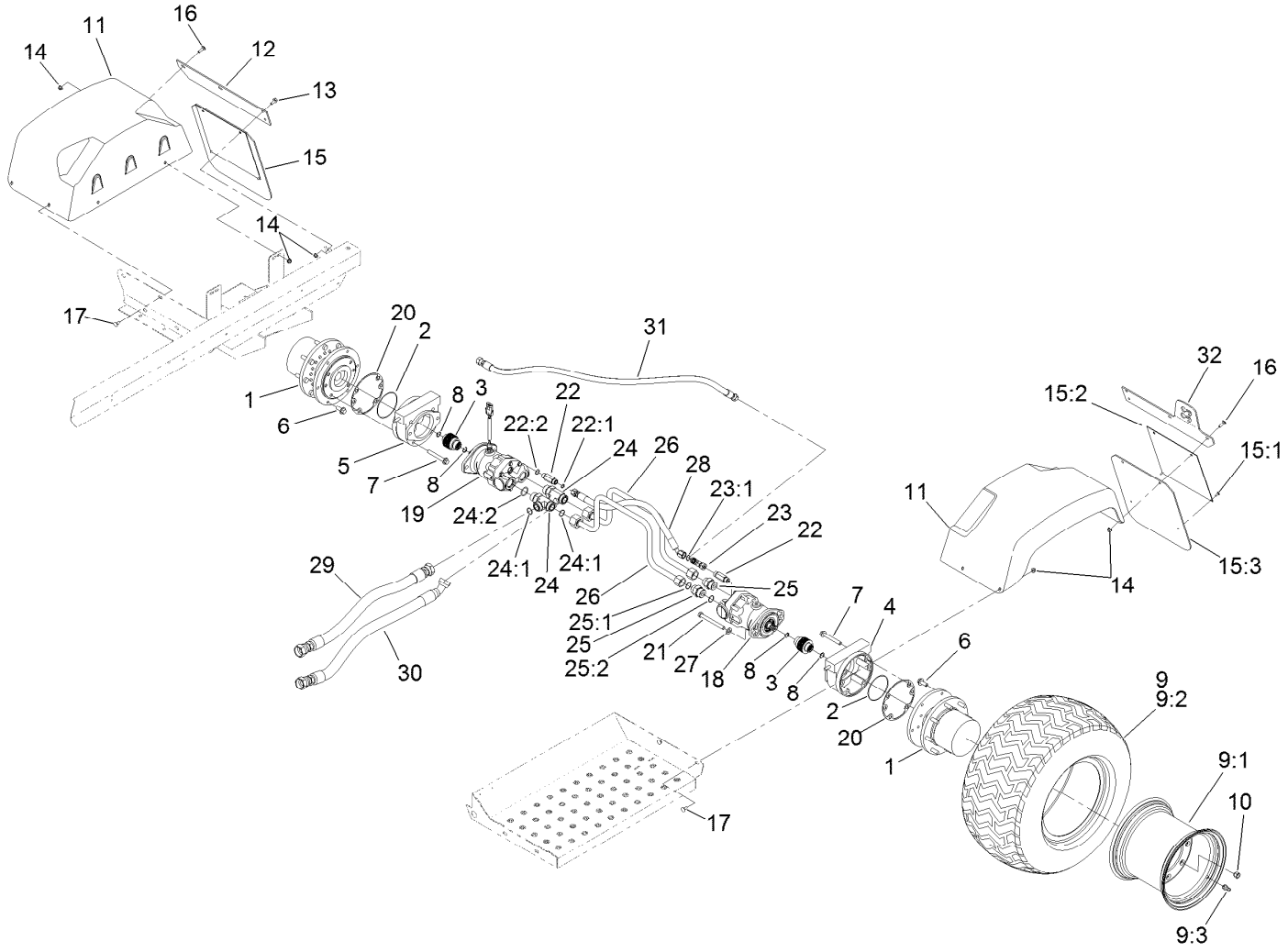

Rear Drive Assembly

Ref.	Part Number	Qty.	Description
1	105-4500	2	Planetary ASM
2	237-166	2	O-Ring
3	100-3046	2	Shaft-Brake, Splined
4	100-3069	1	RH Brake ASM
5	100-3070	1	LH Brake ASM
6	33106-030	12	Screw-HHF
7	33106-090	8	Screw-HHF
8	93-7972	4	Ring-Retaining, Internal
9	136-2300	2	Tire And Wheel ASM
9:1	136-2301	1	Wheel
9:2	117-5196	1	Tire
9:3	232-27	1	Stem-Valve
10	242-50	16	Nut-Lug
11	93-6498	2	Fender-Rear
12	93-6528-03	1	Strap-Mount, Fender
13	3234-5	4	Screw-HHF
14	104-8300	16	Nut-HF, NI
15	94-7127	2	Splash Guard ASM
15:1	114439	2	Rivet-Blind
15:2	94-7128-03	1	Plate-Guard, Splash
15:3	94-7129	1	Guard-Splash

Ref.	Part Number	Qty.	Description
16	3230-2	4	Bolt-CARR
17	3230-1	8	Bolt-CARR
18	132-5631	1	HYD Motor ASM
19	132-5630	1	HYD Motor ASM (W/Speed Sensor)-
20	93-7984	2	Gasket
21	33116-120	4	Screw-HH
22	119-4854	2	Fitting-STR
22:1	237-30	1	O-Ring
22:2	237-79	1	O-Ring
23	340-104	1	Fitting-HYD, Tee
23:1	237-30	2	O-Ring
24	104-3795	2	Fitting-Tee
24:1	340-65	2	O-Ring
24:2	237-146	1	O-Ring
25	340-91	2	Fitting-STR
25:1	237-58	1	O-Ring
25:2	237-146	1	O-Ring
26	117-0674	2	Tube-Traction
27	33096-00	4	Washer-Flat
28	131-9634	1	Hydraulic Hose ASM

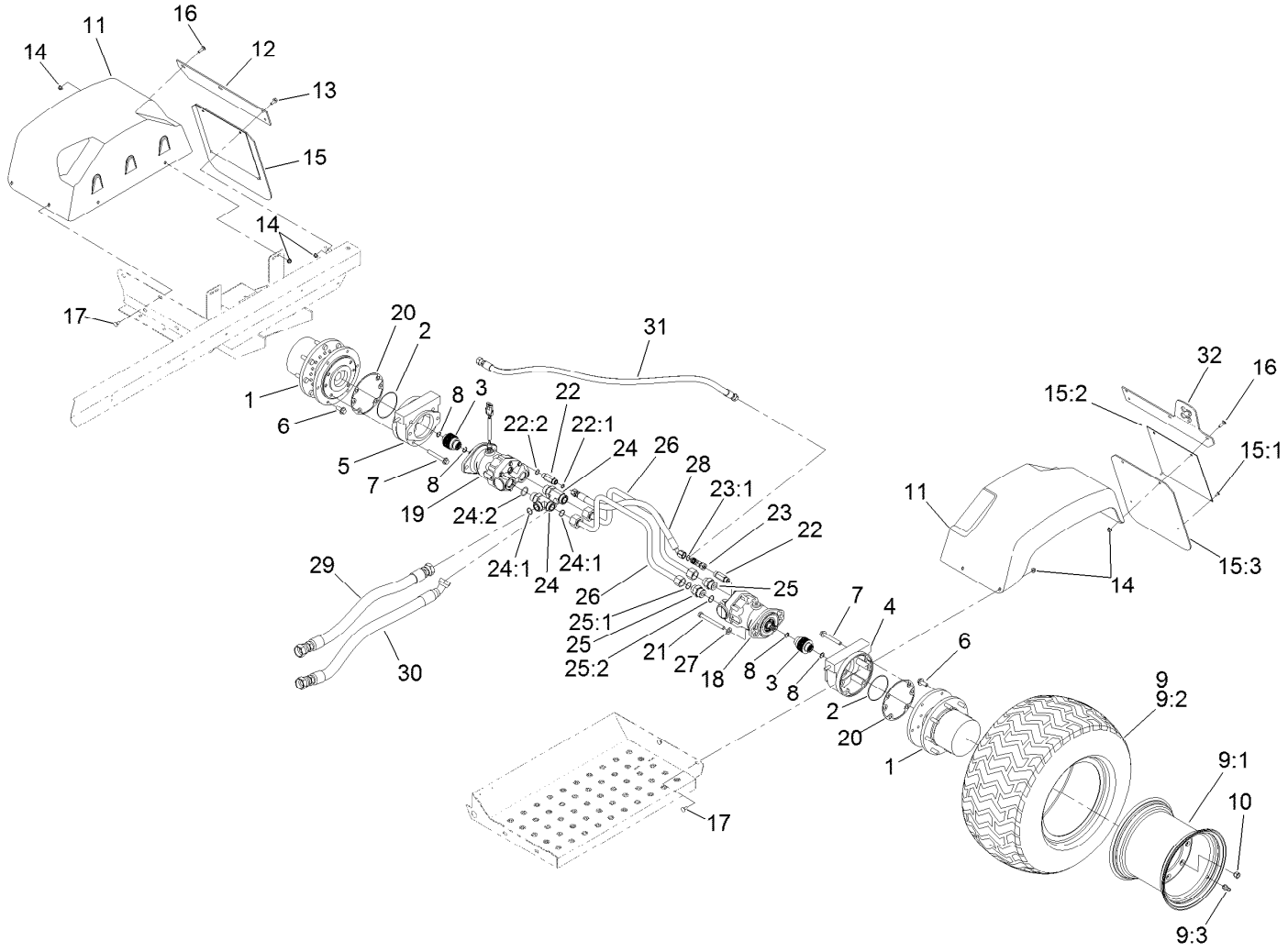

Rear Drive Assembly (continued)

Ref.	Part Number	Qty.	Description
29	120-8563	1	Hose ASM
30	120-8564	1	Hose ASM
31	119-0582	1	Hose ASM
32	136-2308-03	1	Support-Mount, Drain

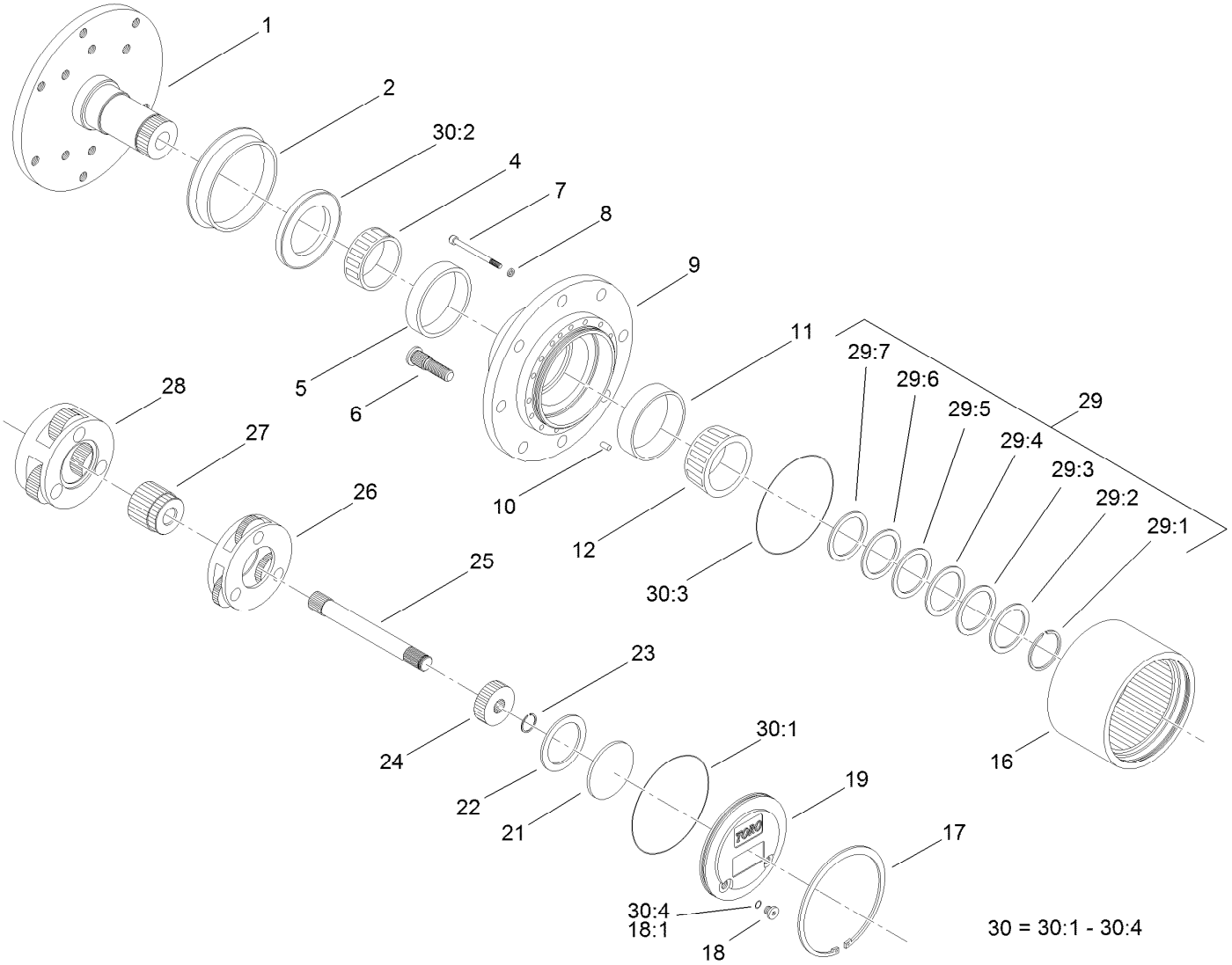

Planetary Assembly No. 105-4500

Ref.	Part Number	Qty.	Description
1		1	Spindle ●
2	105-8122	1	Seal-Boot
4	105-8120	1	Bearing-Cone
5	105-8119	1	Bearing-Cup
6	105-8124	8	Stud-Wheel
7	105-8125	16	Bolt-Head, Socket
8	3253-18	16	Washer-Lock
9		1	Housing ●
10	105-8121	1	Pin-Dowel
11	105-8117	1	Bearing-Cup
12	105-8118	1	Bearing-Cone
16	105-8113	1	Gear-Ring
17	105-8132	1	Ring-Retaining
18	353-990	2	Plug ASM
18:1	237-78	1	O-Ring
19	105-8138	1	Cap-End
21	105-8133	1	Plug-Thrust
22	105-8123	1	Washer-Thrust
23	105-8131	1	Ring-Retaining

● Not serviced separately

Ref.	Part Number	Qty.	Description
24	105-8114	1	Gear-Primary
25	105-8115	1	Shaft-Drive
26	105-8129	1	Carrier-Primary
27	105-8139	1	Gear-Secondary
28	105-8130	1	Carrier-Secondary
29	105-8136	1	Shim Kit
29:1		1	Ring-Snap ●
29:2		1	Shim-Bearing, 2.9Mm ●
29:3		1	Shim-Bearing, 2.8Mm ●
29:4		1	Shim-Bearing, 2.7Mm ●
29:5		1	Shim-Bearing, 2.6Mm ●
29:6		1	Shim-Bearing, 2.5Mm ●
29:7		1	Shim-Bearing, 2.4Mm ●
30	105-8137	1	Seal Kit
30:1		1	O Ring-Flange Cap ●
30:2		1	Seal-Oil ●
30:3		2	O Ring-End Cap ●
30:4	237-78	2	O-Ring

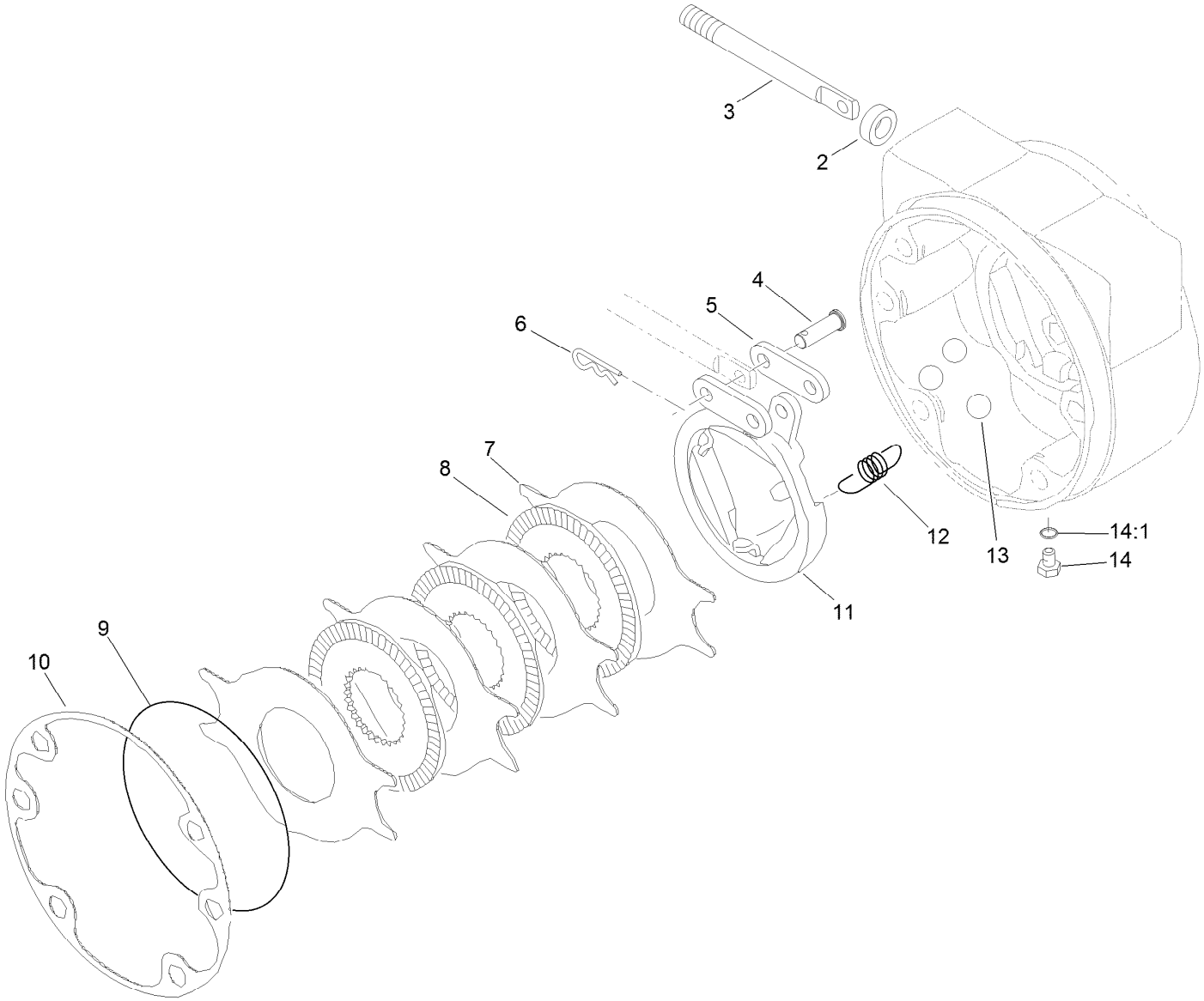

RH Brake Assembly No. 100-3069

Ref.	*Part Number*	*Qty.*	*Description*
2	93-7977	1	Seal
3	93-7978	1	Rod-Pull
4	93-7983	2	Pin-Clevis
5	93-7980	2	Link
6	93-7979	2	Pin-Hitch
7	93-7986	4	Disc-Stationary
8	104-4278	3	Disc-Rotating
9	93-7976	1	Ring-Retaining
10	93-7984	1	Gasket
11	104-4280	1	Actuator-Rotating
12	93-7987	3	Spring-Extension
13	93-7985	3	Ball
14	353-990	2	Plug ASM
14:1	237-78	1	O-Ring

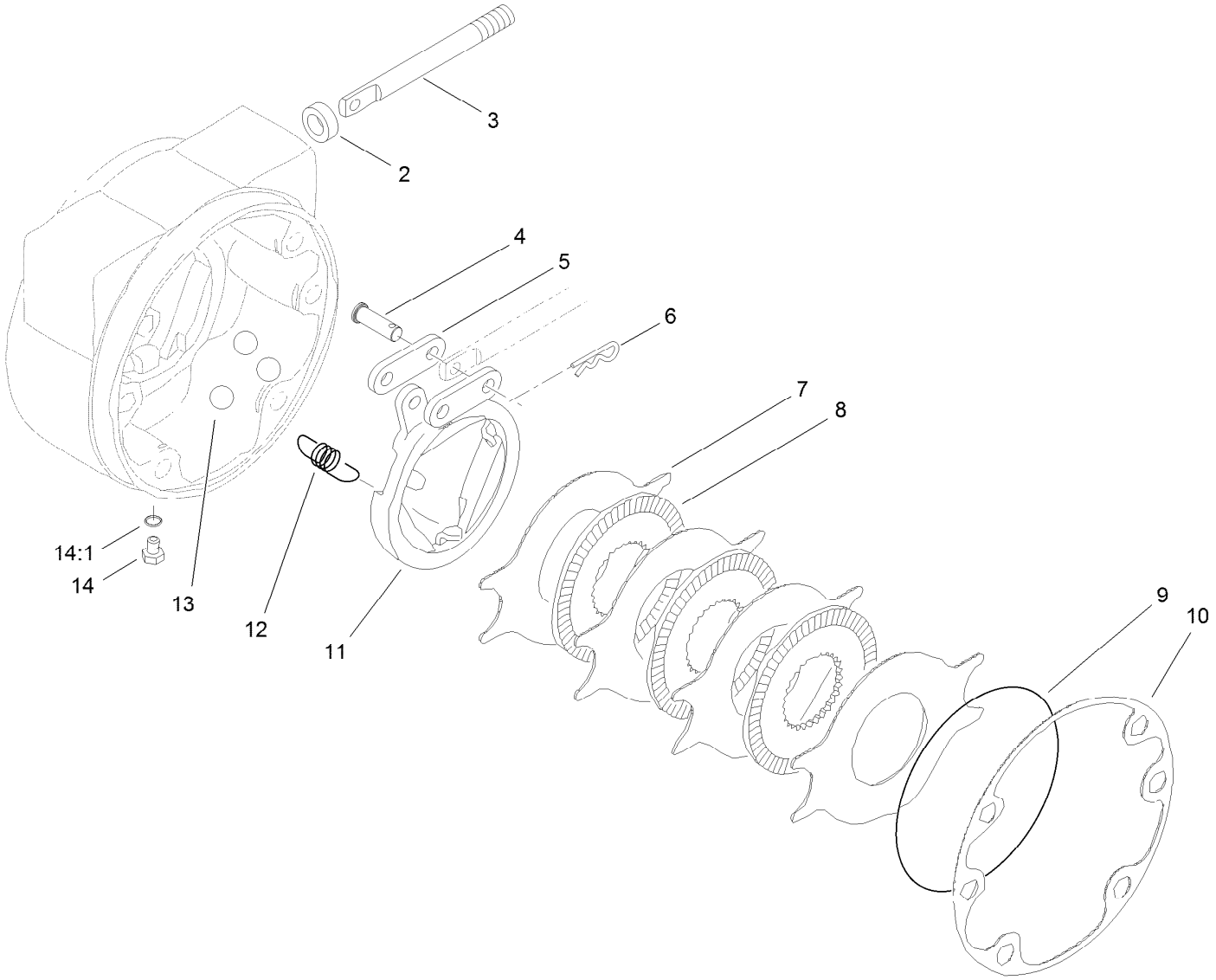

LH Brake Assembly No. 100-3070

Ref.	Part Number	Qty.	Description
2	93-7977	1	Seal
3	93-7978	1	Rod-Pull
4	93-7983	2	Pin-Clevis
5	93-7980	2	Link
6	93-7979	2	Pin-Hitch
7	93-7986	4	Disc-Stationary
8	104-4278	3	Disc-Rotating
9	93-7976	1	Ring-Retaining
10	93-7984	1	Gasket
11	104-4279	1	Actuator-Rotating
12	93-7987	3	Spring-Extension
13	93-7985	3	Ball
14	353-990	2	Plug ASM
14:1	237-78	1	O-Ring

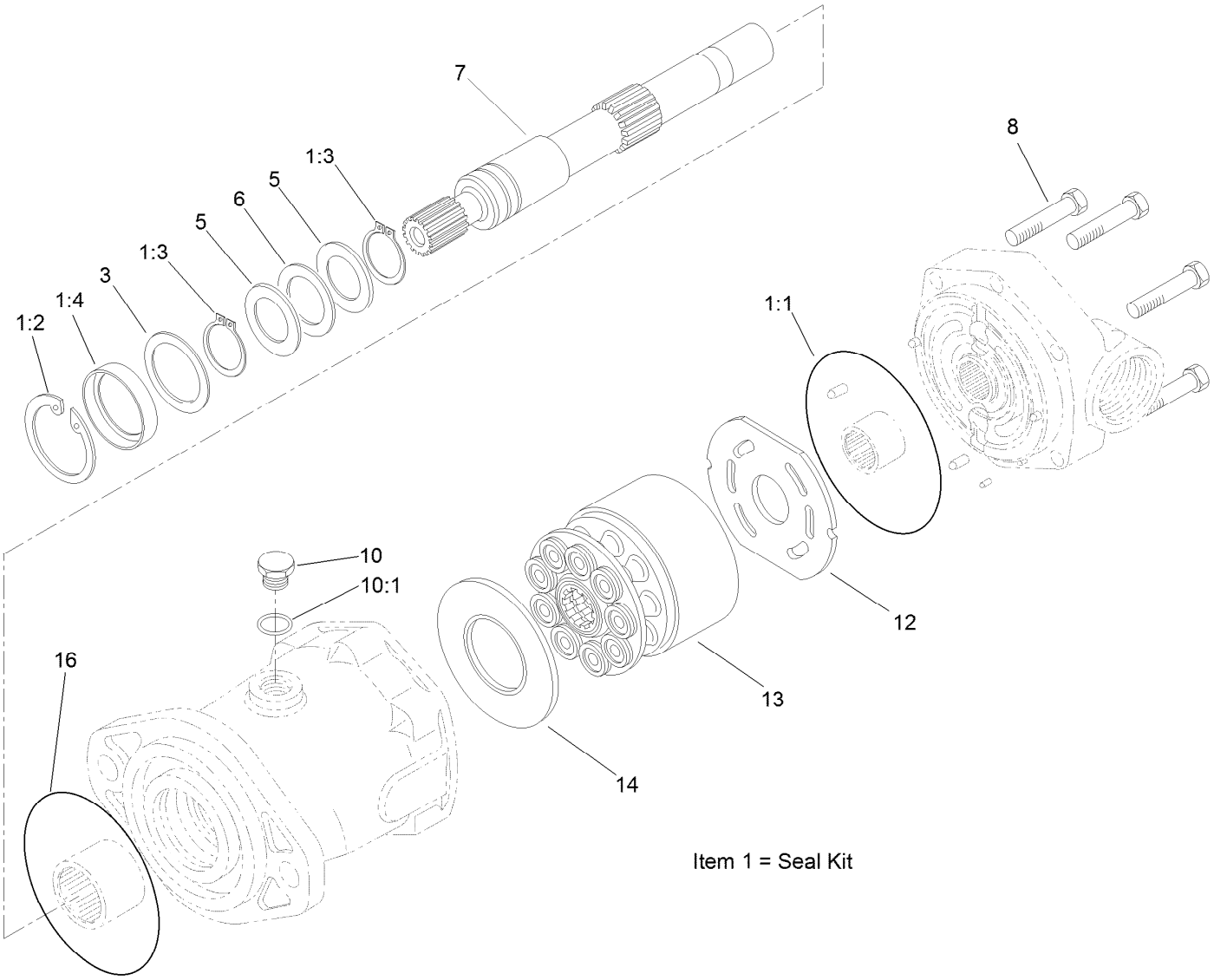

Hydraulic Motor Assembly No. 132-5631

Ref.	Part Number	Qty.	Description
1	106-6876	1	Seal Kit
1:1		1	O-Ring ●
1:2	76-7010	1	Ring-Retaining
1:3	76-7000	2	Ring-Retaining
1:4		1	Seal-Shaft ●
3	60-6240	1	Washer
5	76-6950	2	Race-Thrust
6	76-6960	1	Bearing-Thrust

Ref.	Part Number	Qty.	Description
7	94-3004	1	Shaft-Drive, Splined
8	94-3002	6	Screw-Cap
10	94-3009	1	Plug
10:1		1	O-Ring ●
12	94-3003	1	Plate-Valve
13	76-6910	1	Rotating Kit
14	76-6970	1	Insert-Plate, Cam
16	237-166	1	O-Ring

● Not serviced separately

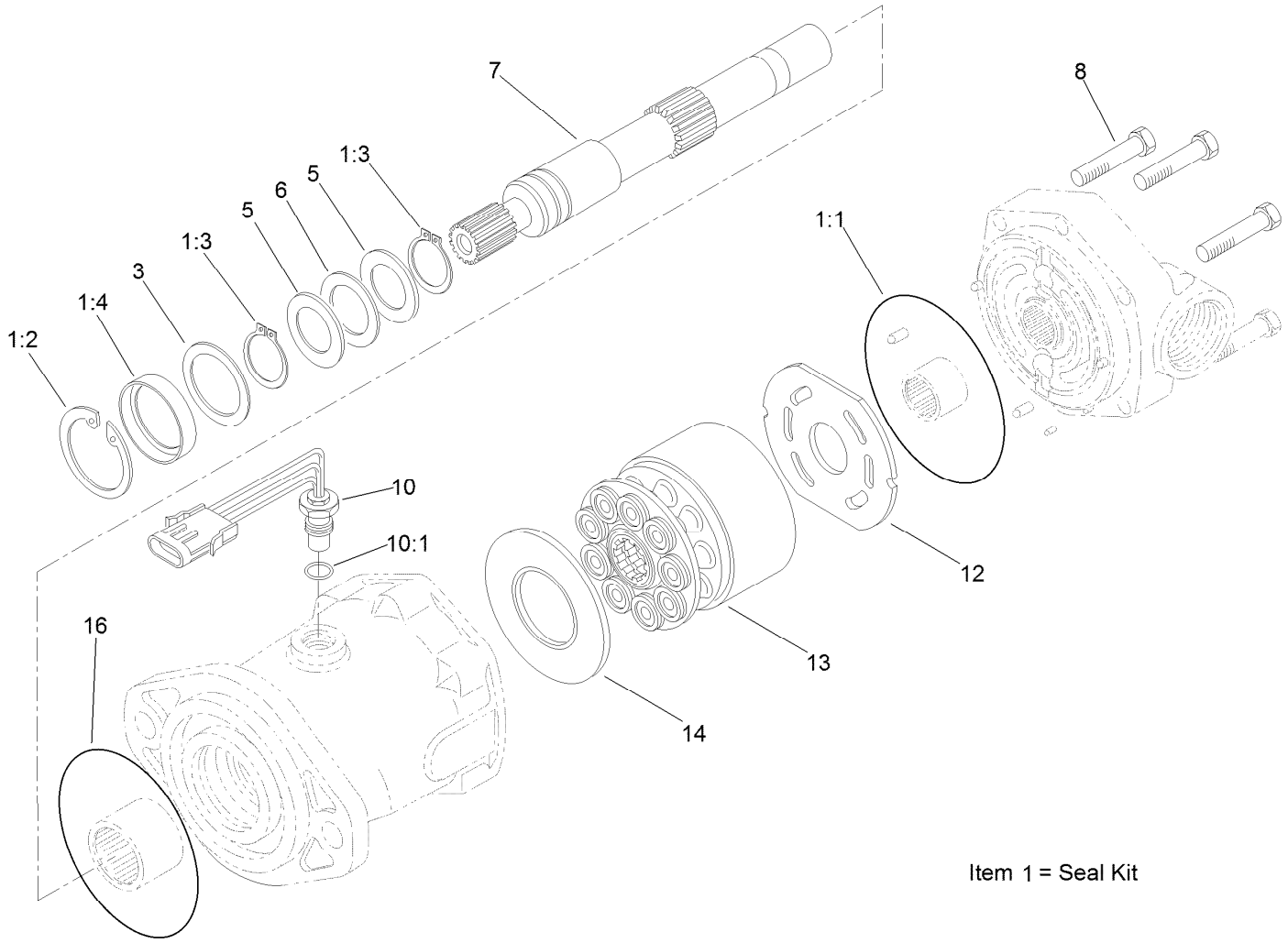

Hydraulic Motor Assembly No. 132-5630

Ref.	Part Number	Qty.	Description
1	106-6876	1	Seal Kit
1:1		1	O-Ring ●
1:2	76-7010	1	Ring-Retaining
1:3	76-7000	2	Ring-Retaining
1:4		1	Seal-Shaft ●
3	60-6240	1	Washer
5	76-6950	2	Race-Thrust
6	76-6960	1	Bearing-Thrust

Ref.	Part Number	Qty.	Description
7	94-3004	1	Shaft-Drive, Splined
8	94-3002	6	Screw-Cap
10	94-3010	1	Sensor-Speed, Pickup
10:1		1	O-Ring ●
12	94-3003	1	Plate-Valve
13	76-6910	1	Rotating Kit
14	76-6970	1	Insert-Plate, Cam
16	237-166	1	O-Ring

● Not serviced separately

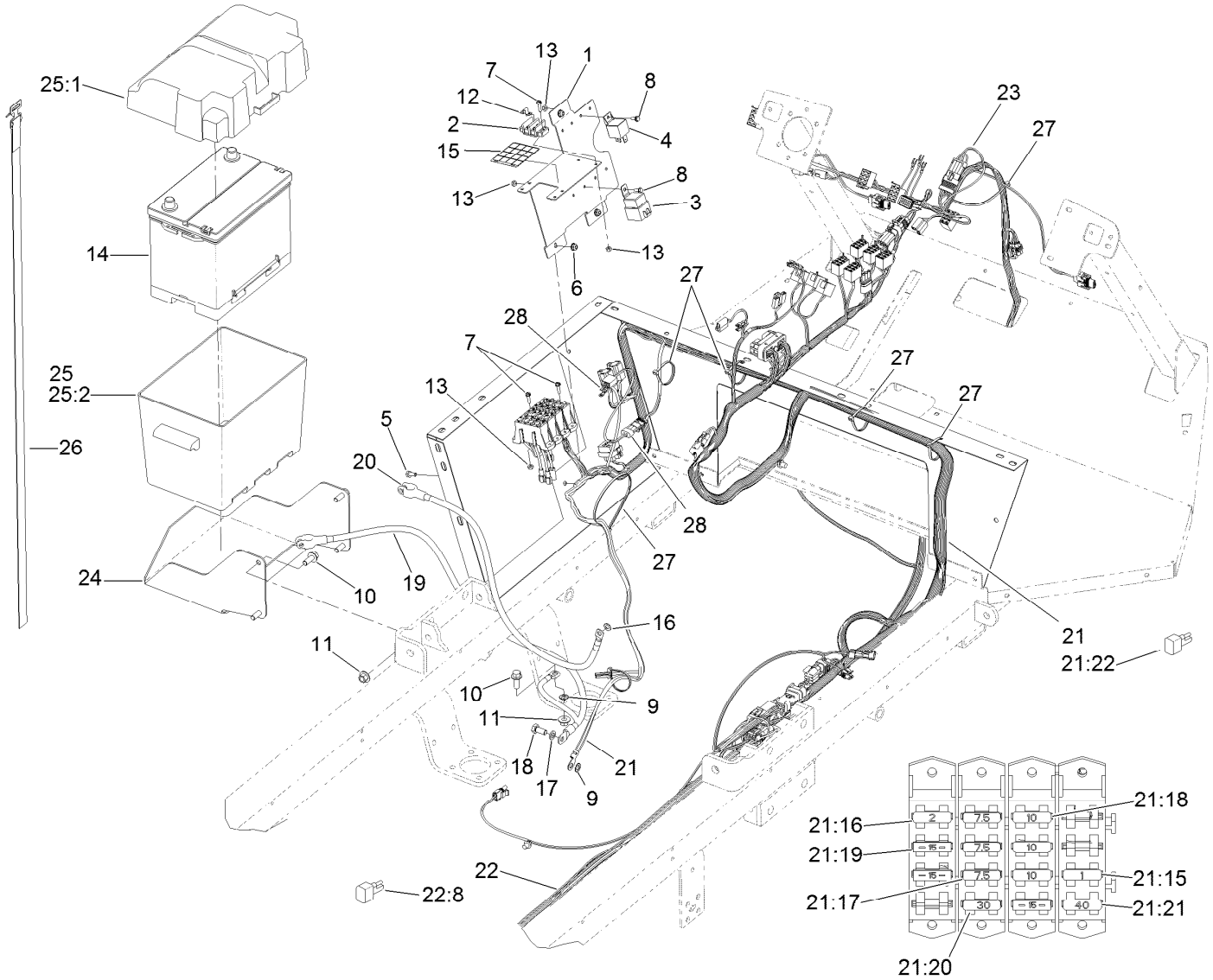

Electrical Assembly

Ref.	Part Number	Qty.	Description
1	133-2757-01	1	Panel-Electrical
2	42862	1	Block-Terminal, Ground
3	99-7430	1	Relay
4	99-7435	1	Relay-Power
5	321-3	3	Screw-HH
6	104-7201	3	Nut-HF
7	32105-13	4	Screw-HWH
8	3290-321	2	Screw-HWH
9	3255-9	2	Washer-Lock
10	3234-11	5	Screw-HHF
11	32128-43	5	Nut-Flange
12	42863	1	Strip-Jumper
13	3296-2	6	Nut-Lock, NI
14	106-5190	1	Battery
15	133-2758	1	Decal-Fuse
16	3255-8	1	Washer-Lock
17	48-9590	1	Washer-Lock
18	63-7790	1	Screw-Cap
19	120-0615	1	Cable-Battery, Negative
20	105-0114	1	Cable-Battery, Positive

Ref.	Part Number	Qty.	Description
21	122-0671	1	Harness-Wire
21:15	104-9055	1	Fuse-Blade, 1 Amp
21:16	94-6710	1	Fuse-2 Amp
21:17	114241	3	Fuse-Blade, 7.5 Amp
21:18	218-578	3	Fuse-Blade, 10 Amp
21:19	109355	3	Fuse-Blade, 15 Amp
21:20	109103	1	Fuse-Blade, 30 Amp
21:21	99-6124	1	Fuse-40 Amp
21:22	100-4918	2	Diode
22	122-0694	1	Harness-Wire, Rear
22:8	100-4918	4	Diode
23	122-0695	1	Harness-Wire, Auto/MAN
24	119-5049-03	1	Bracket-Battery
25	93-7595	1	Battery Box ASM
25:1	105-2914	1	Top-Battery Box
25:2	105-2915	1	Bottom-Battery Box
26	3339-175	1	Strapping-Web
27	3290-379	6	Tie-Cable
28	108-8657	1	Harness-Wire, Seat

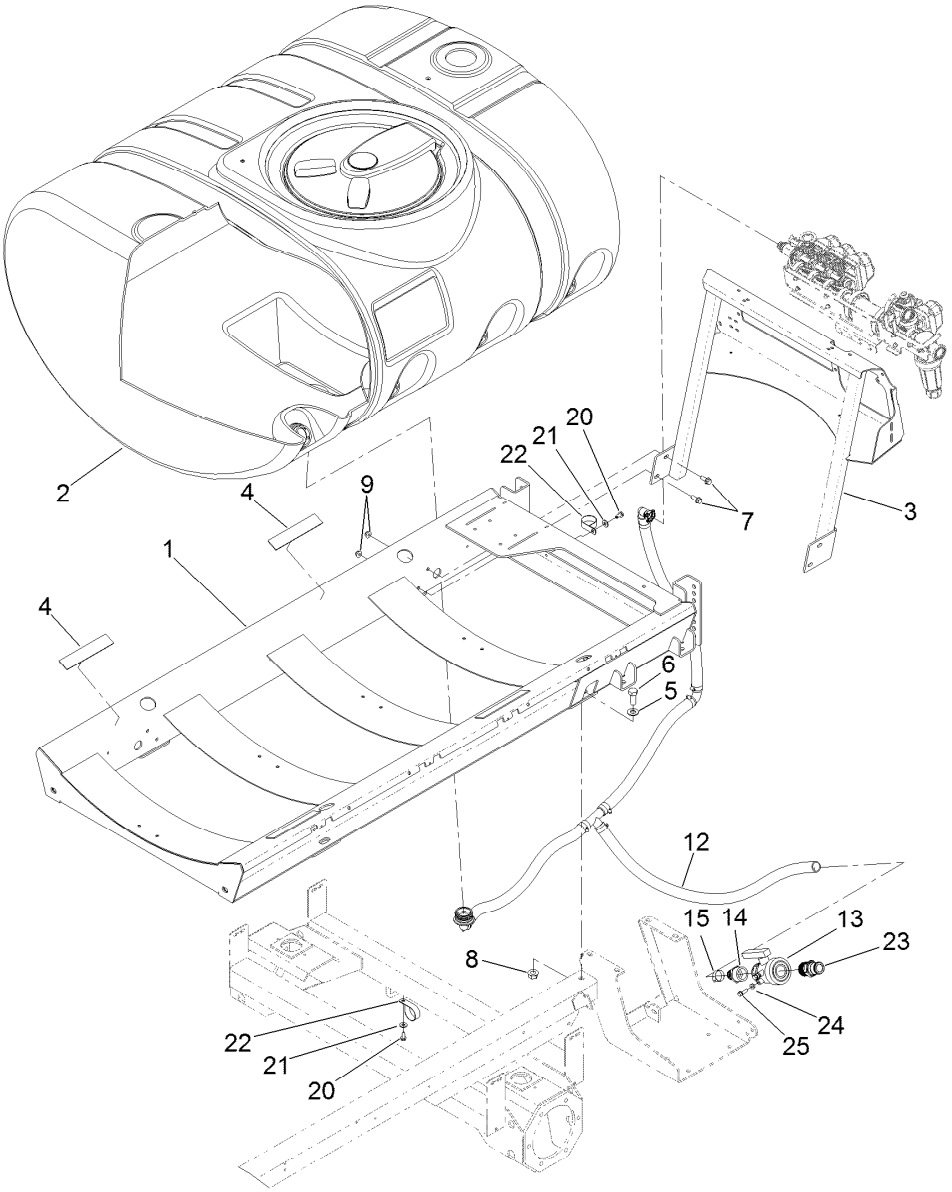

Tank and Saddle Assembly

Ref.	Part Number	Qty.	Description
1	130-7092-03	1	Tank Saddle ASM
2	117-8005	1	Tank ASM
3	136-2289-03	1	Support-Valve
4	104-7102	4	Pad-Battery
5	3256-27	6	Washer-Flat
6	327-4	6	Screw-HH
7	3234-11	4	Screw-HHF
8	32128-50	6	Nut-Flange
9	104-8301	4	Nut-HF, NI
12	132-4297	1	Bypass Hose ASM

Ref.	Part Number	Qty.	Description
13	108-0069	1	Valve-Ball
14	110-5224	1	Fitting-Barbed, Straight
15	2412-34	1	Clamp-Hose
20	32104-32	2	Screw-HWH
21	3256-3	2	Washer-Flat
22	2412-147	2	Clamp-R
23	132-7787	1	Coupler-Quick
24	32128-26	2	Nut-Flange
25	3234-29	2	Screw-HHF

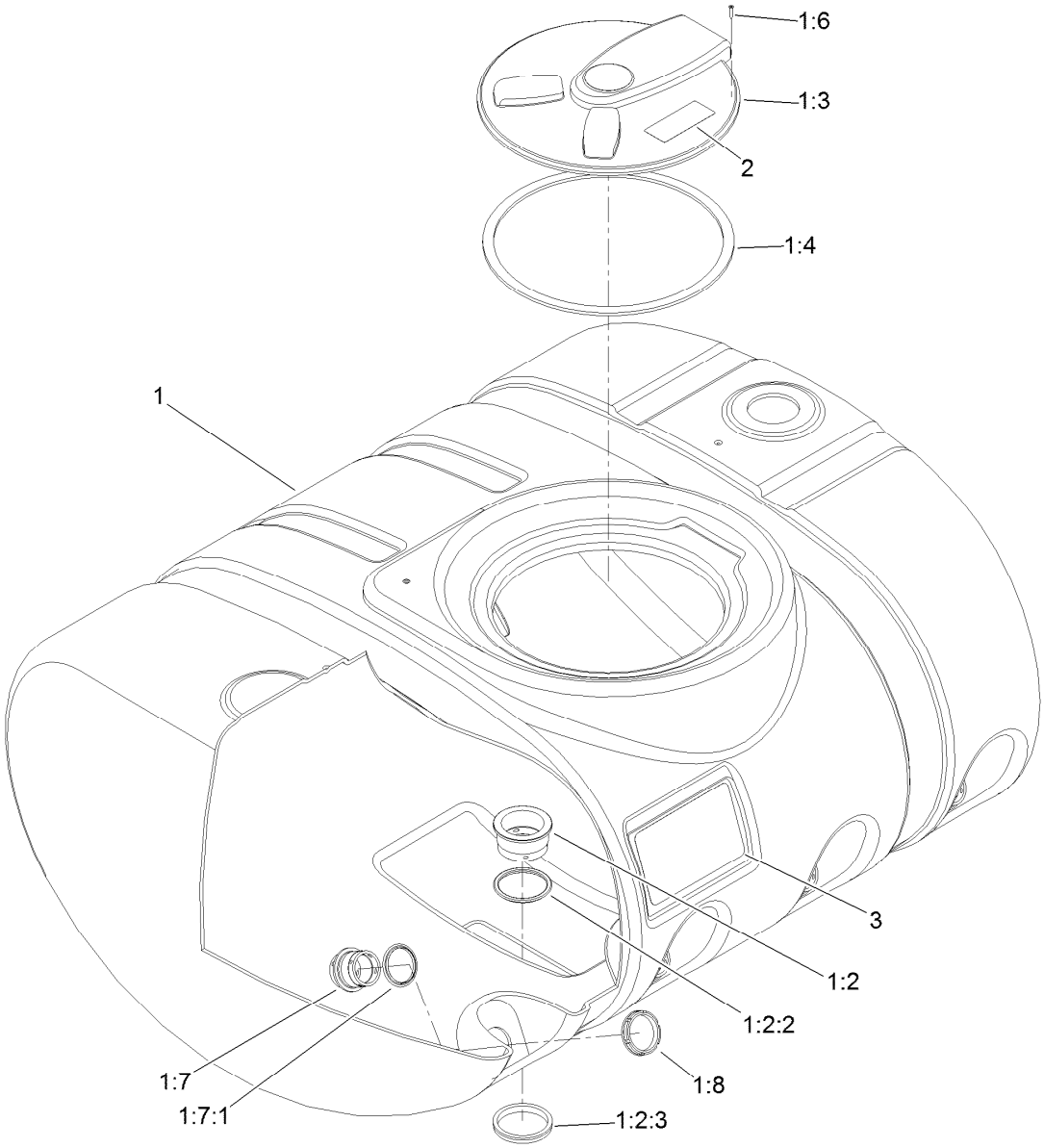

Tank Assembly No. 117-8005

Ref.	Part Number	Qty.	Description
1		1	Tank ASM ●
1:2	117-7851	1	Bulkhead ASM
1:2:2	100-8646	1	Gasket-Bulkhead
1:2:3	100-8647	1	Nut-Bulkhead
1:3	119-9380	1	Spray Tank Lid ASM
1:4	119-9378	1	Gasket-Lid, Tank
1:6	107-8635	8	Screw-PFH
1:7	108-3358	4	Fitting-Bulkhead
1:7:1	107-2864	1	Gasket-Bulkhead
1:8	100-7051	4	Nut-Bulkhead
2	120-0622	1	Decal-Warning
3	119-5042	2	Decal-Tank

● Not serviced separately

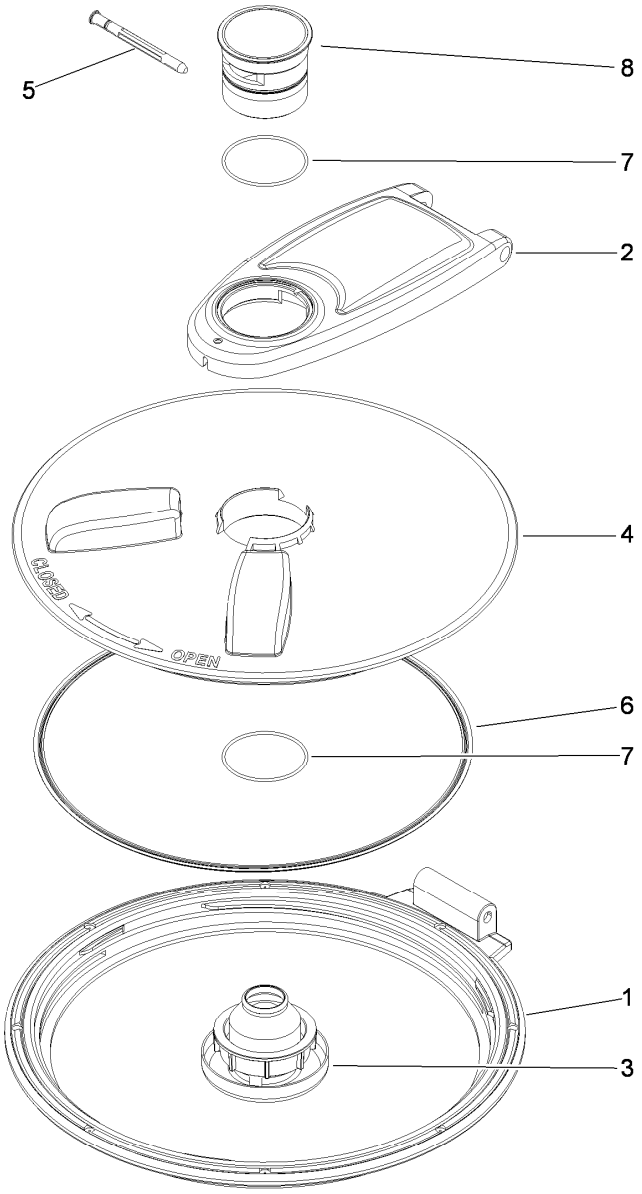

Spray Tank Lid Assembly No. 119-9380

Ref.	*Part Number*	*Qty.*	*Description*
1	119-9381	1	Ring-Lid
2	119-9382	1	Arm-Lid
3	119-9383	1	Vent-Lid
4	119-9384	1	Cover-Lid
5	119-9385	1	Pin-Pivot
6	106-5004	1	Seal-Lid
7	119-9386	2	O-Ring
8	119-9387	1	Cap-Lid

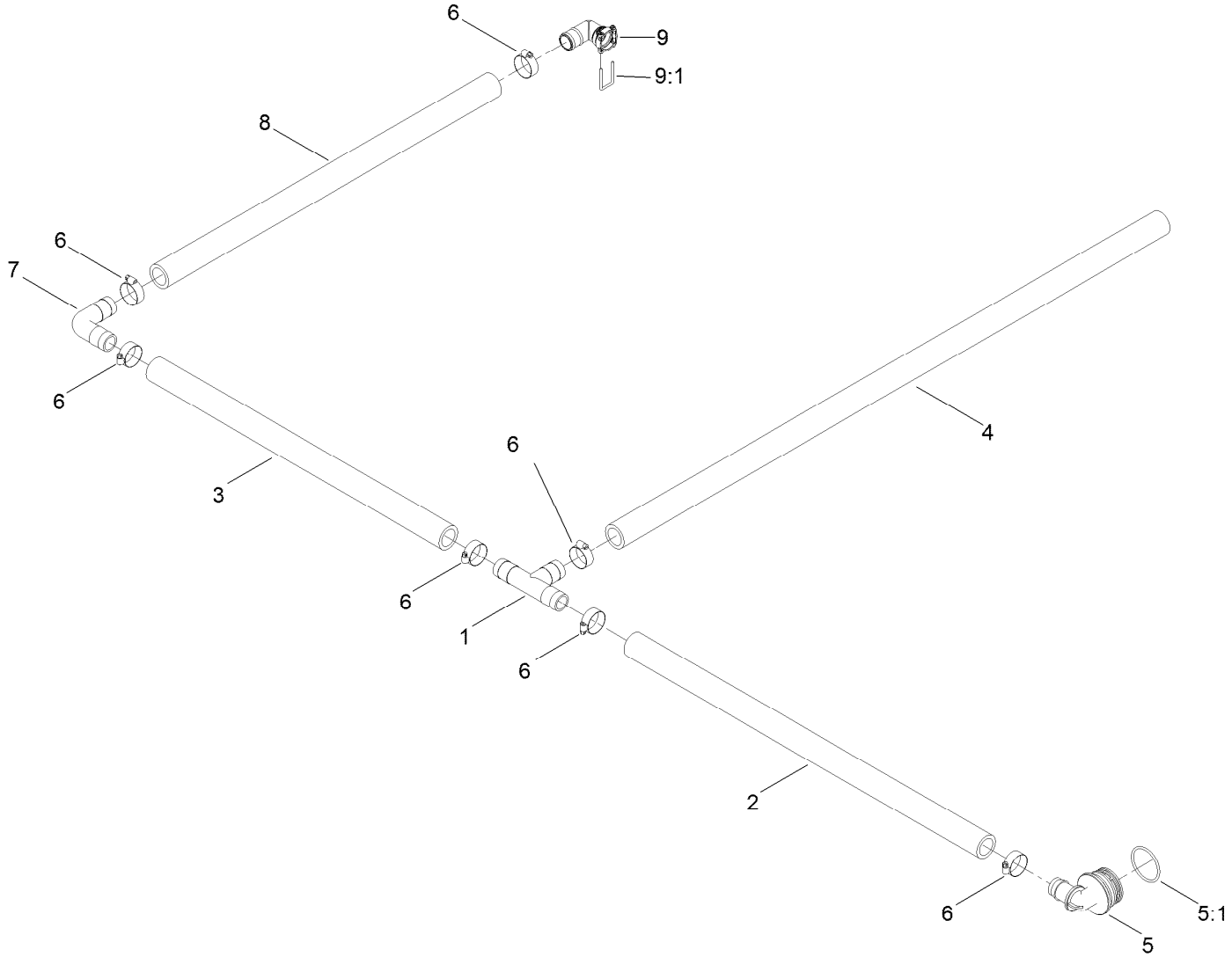

Bypass Hose Assembly No. 132-4297

Ref.	*Part Number*	*Qty.*	*Description*
1	117-7866	1	Tee-Hosebarb
2	131-5775	1	Hose-Drain
3	131-5825	1	Hose-Drain
4	131-5777	1	Hose-Drain
5	106-4933	1	Hosebarb ASM
5:1	100-8637	1	O-Ring
6	2412-34	7	Clamp-Hose
7	117-7867	1	Elbow-Hosebarb
8	131-5824	1	Hose-Drain
9	131-0213	1	90 DEG Barb Fitting Kit
9:1	133-0398	1	Pin-Fork

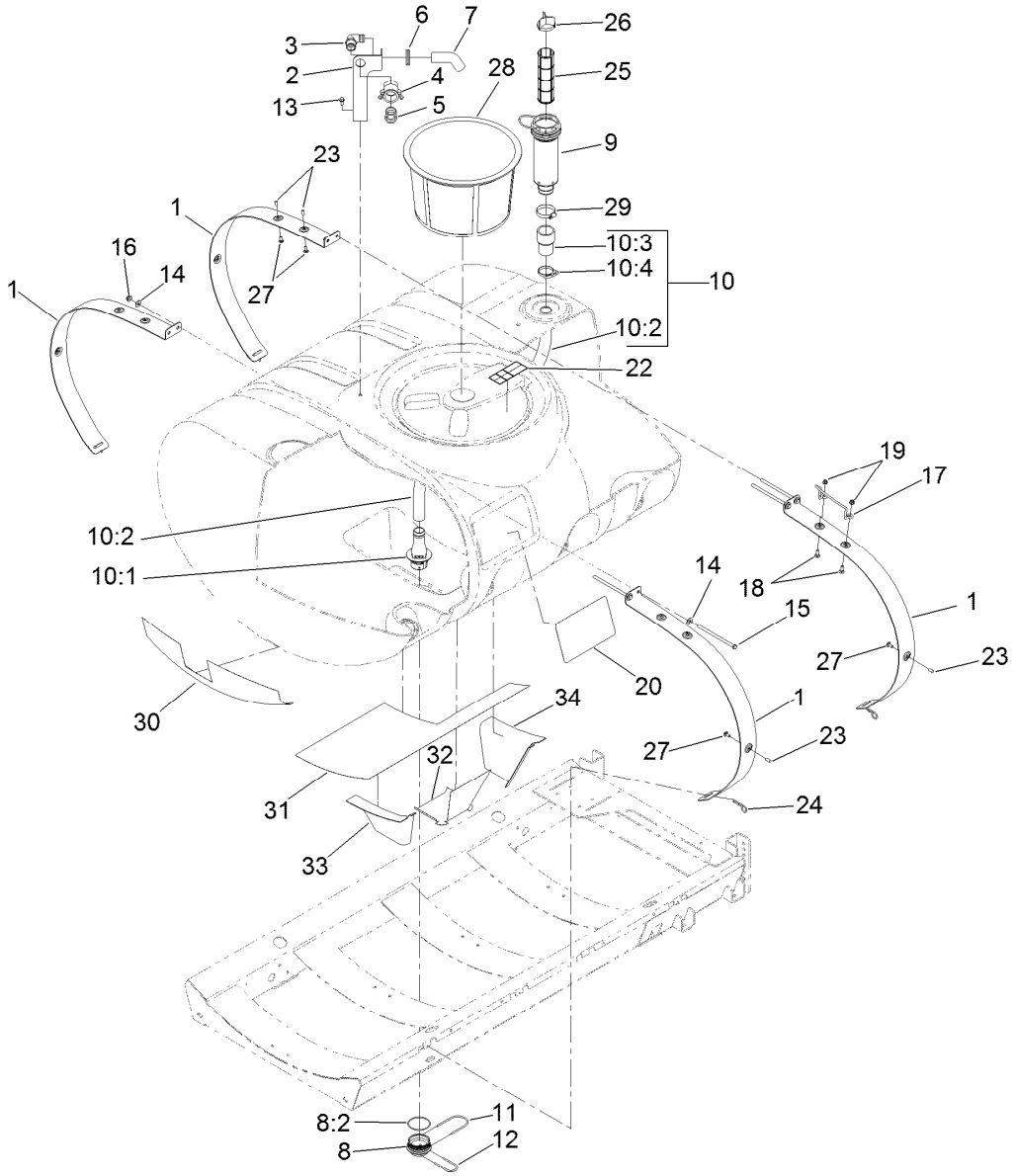

Tank Mounting and Filter Assembly

Ref.	Part Number	Qty.	Description
1	117-8029-03	4	Band-Tank
2	110-5082-03	1	Bracket-Anti Siphon
3	41140	1	Elbow
4	100-6779	1	Coupling-Female
5	41316	1	Adapter-Quick
6	110-5090	1	Grommet
7	110-5088	1	Hose-Fill
8	117-7928	1	Adapter ASM
8:2	100-6989	1	O-Ring
9	130-7096	1	Filter ASM
10	121-5003	1	Suction Tube ASM
10:1	121-5008	1	Foot-Suction
10:2	121-5030	1	Tube-Suction
10:3	121-5031	1	Connector-Suction
10:4	121-5047	1	Clamp-Nylon
11	117-7996	1	Fork
12	100-8635	1	Fork
13	3234-5	1	Screw-HHF
14	3256-4	8	Washer-Flat
15	120-0649	4	Bolt-TAP HH
16	104-8301	4	Nut-HF, NI

Ref.	Part Number	Qty.	Description
17	119-5019	1	Stop-Lid
18	3230-2	2	Bolt-CARR
19	104-8300	2	Nut-HF, NI
20	131-3316	2	Decal-Tank
22	120-0622	1	Decal-Warning
23	42452	5	Cap-Protective
24	3290-343	4	Pin-Hair
25	100-6991	1	Element-Filter, Green
25	100-6992	1	Element-Filter, Red
25	100-8642	1	Screen-Suction
26	100-8641	1	Vane-Screen
27	3230-1	5	Bolt-CARR
28	119-9419	1	Basket-Filter
29	2412-130	1	Clamp-Hose
30	130-7139	1	Shield-Heat Tape, Front
31	130-7140	1	Shield-Heat Tape, Bottom
32	130-7141	1	Shield-Heat Tape, Sump
33	131-3298	1	Shield-Heat Tape, Sump, Front
34	131-3299	1	Shield-Heat Tape, Sump, Rear

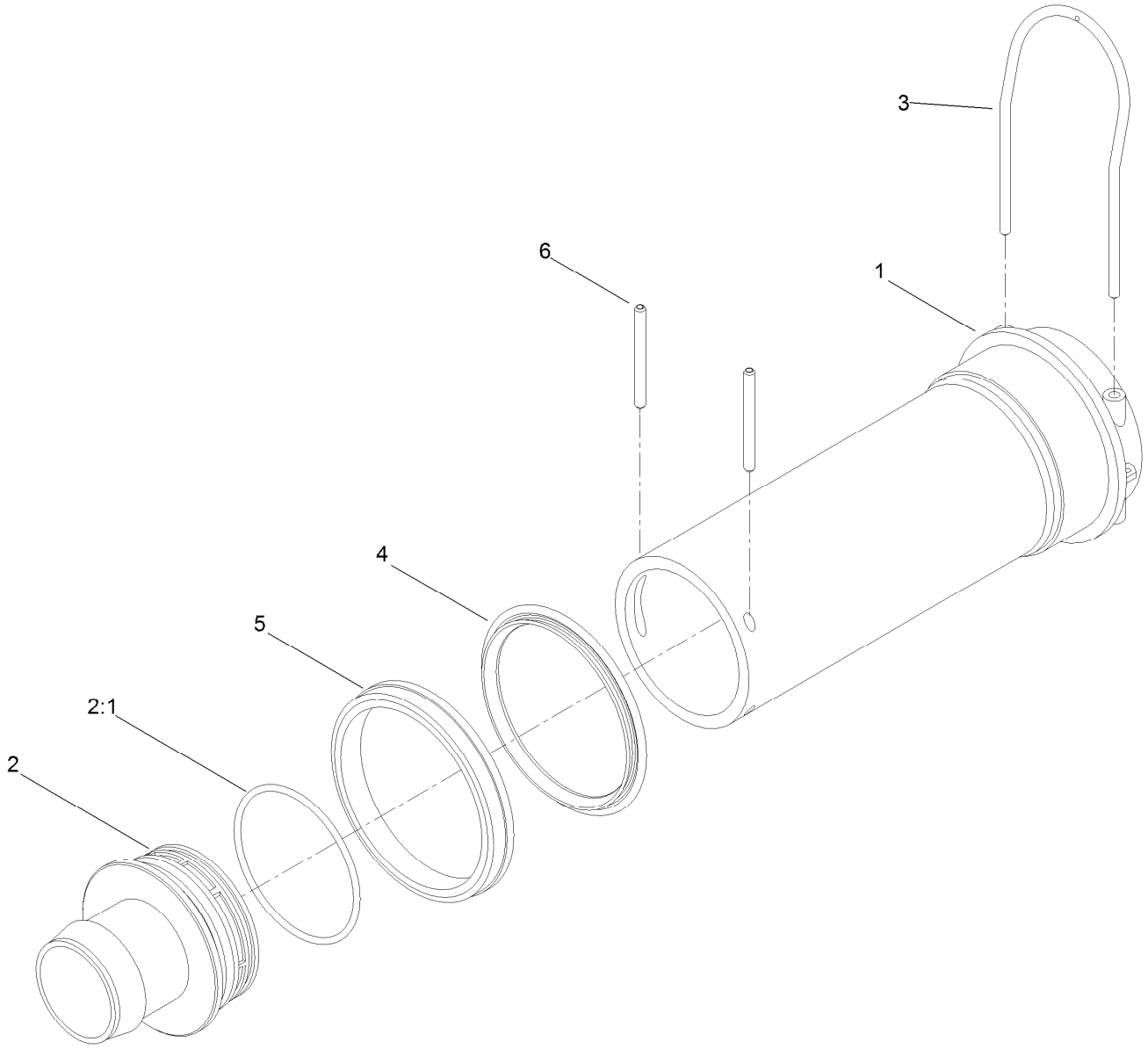

Filter Assembly No. 130-7096

Ref.	*Part Number*	*Qty.*	*Description*
1	100-8643	1	Housing-Filter
2	106-4942	1	Hosebarb-Straight
2:1	100-6989	1	O-Ring
3	100-8636	1	Fork-Special
4	100-8646	1	Gasket-Bulkhead
5	100-8647	1	Nut-Bulkhead
6	100-8644	2	Pin-Expansion

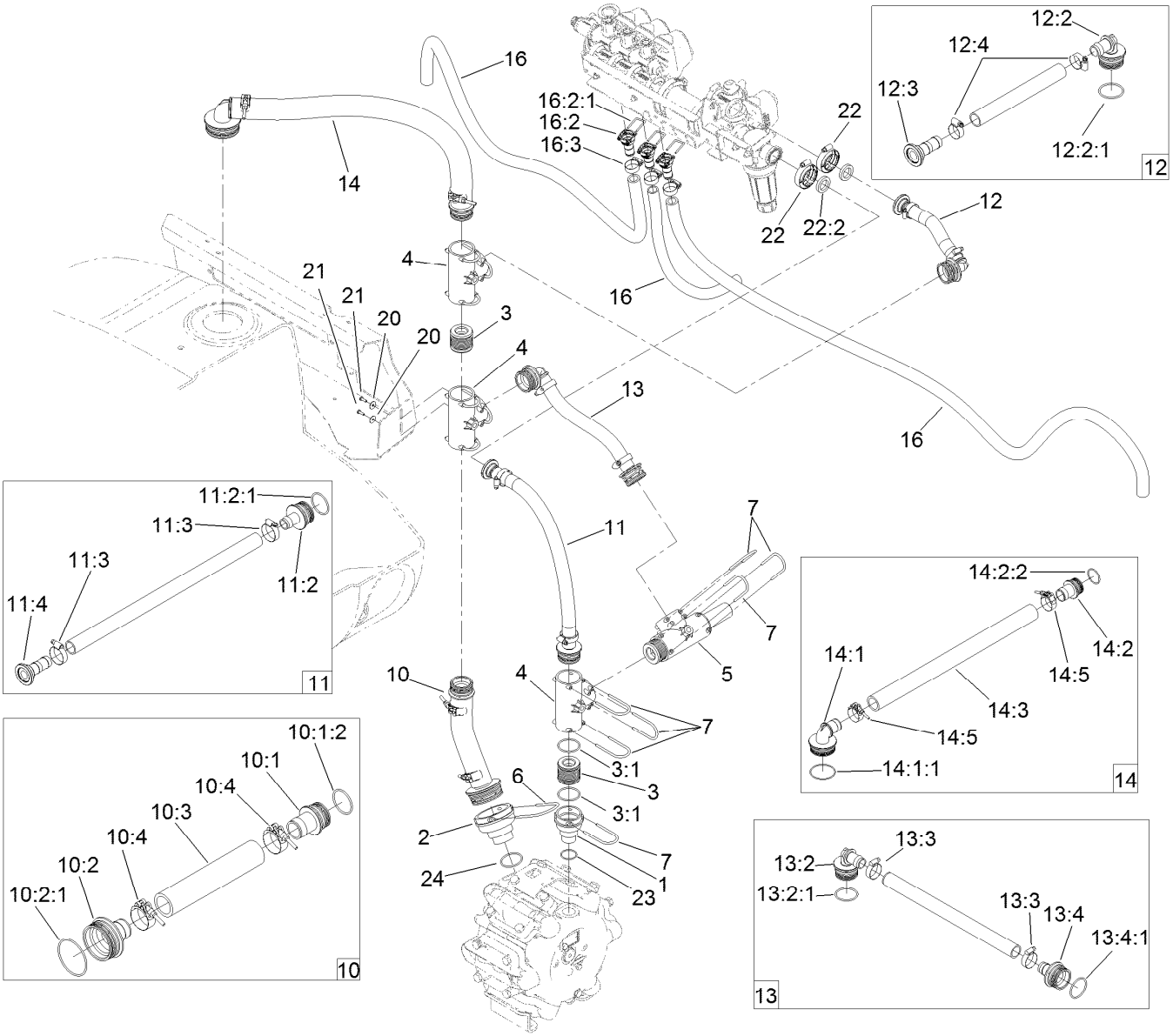

Spray System Hose Assembly

Ref.	Part Number	Qty.	Description
1	133-2881	1	Fitting
2	133-2883	1	Fitting
3	106-4947	2	Connector
3:1	100-8637	2	O-Ring
4	100-6704	3	Tee
5	117-7874	1	Relief Valve ASM
6	117-7996	1	Fork
7	100-8635	11	Fork
10	130-7128	1	Lower Suction Hose ASM
10:1	117-7982	1	Hosebarb ASM
10:1:2	100-8637	1	O-Ring
10:2	117-7965	1	Hosebarb ASM
10:2:1	100-6989	1	O-Ring
10:3	127-8982	1	Hose-Suction, Lower
10:4	130-7125	2	Clamp, T-Bolt
11	132-4295	1	Supply Hose ASM
11:2	106-4932	1	Hosebarb-Straight
11:2:1	100-8637	1	O-Ring
11:3	2412-3	2	Clamp-Hose
11:4	127-1142	1	Fitting-Barb
12	132-4296	1	Agitation Bypass Hose ASM

Ref.	Part Number	Qty.	Description
12:2	106-4933	1	Hosebarb ASM
12:2:1	100-8637	1	O-Ring
12:3	127-1142	1	Fitting-Barb
12:4	2412-129	2	Clamp-Hose
13	117-7963	1	Pressure Relief Hose ASM
13:2	106-4933	2	Hosebarb ASM
13:2:1	100-8637	1	O-Ring
13:3	2412-3	2	Clamp-Hose
13:4	106-4932	1	Hosebarb-Straight
13:4:1	100-8637	1	O-Ring
14	130-7127	1	Upper Suction Hose ASM
14:1	106-4952	1	Hosebarb-90 DEG
14:1:1	100-6989	1	O-Ring
14:2	117-7982	1	Hosebarb ASM
14:2:2	100-8637	1	O-Ring
14:3	127-8981	1	Hose-Suction, Upper
14:5	130-7125	2	Clamp, T-Bolt
16	132-4298	3	Left Boom Hose ASM
16:2	127-9807	1	Straight Fitting Kit
16:2:1	133-0398	1	Pin-Fork
16:3	2412-129	1	Clamp-Hose

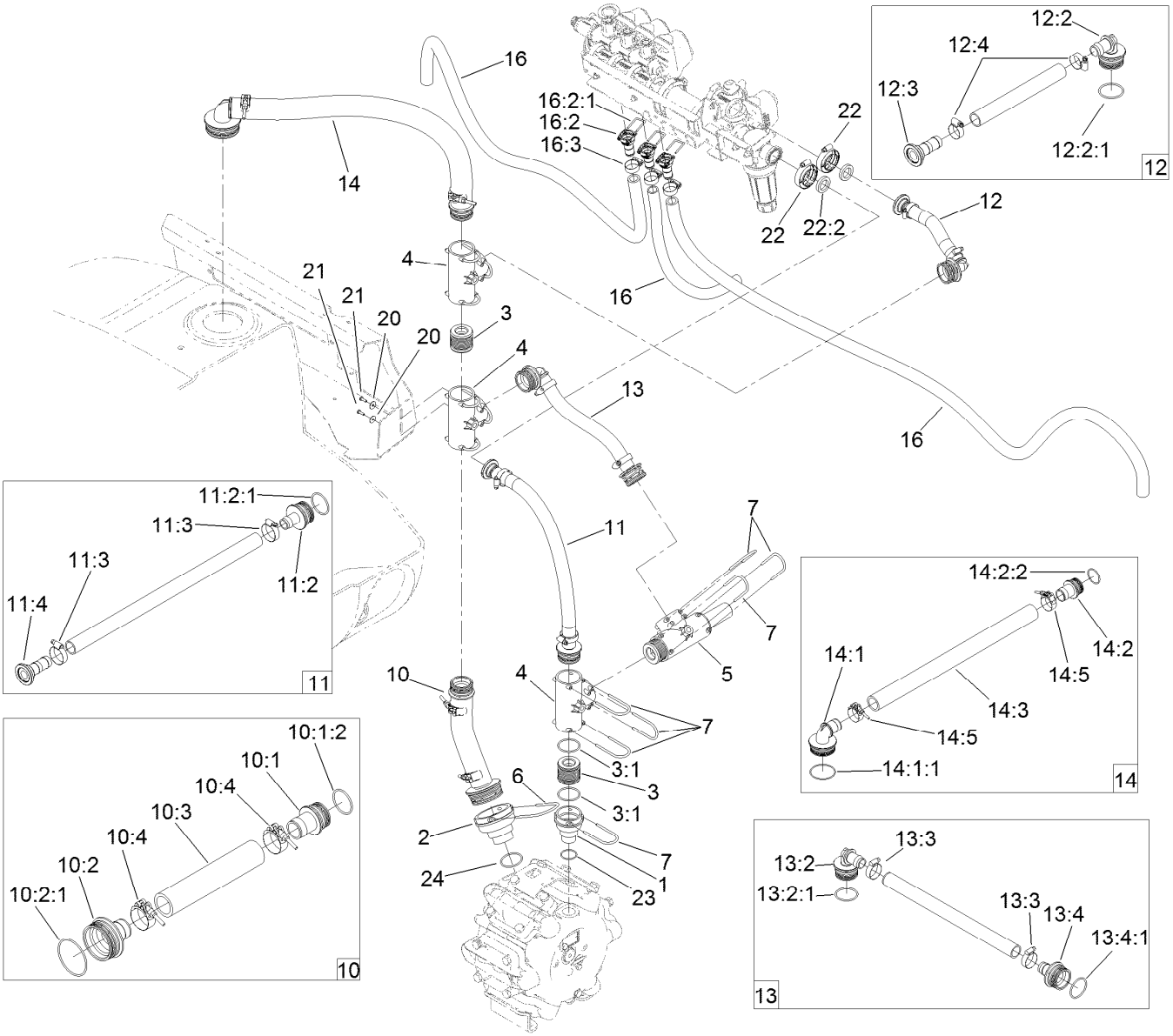

Spray System Hose Assembly (continued)

Ref.	Part Number	Qty.	Description
20	3256-61	2	Washer-Flat
21	32144-32	2	Screw
22	127-9829	2	Clamp/Gasket Kit

Ref.	Part Number	Qty.	Description
22:2	127-1145	1	Gasket-Flange
23	133-2882	1	O-Ring
24	133-2884	1	O-Ring

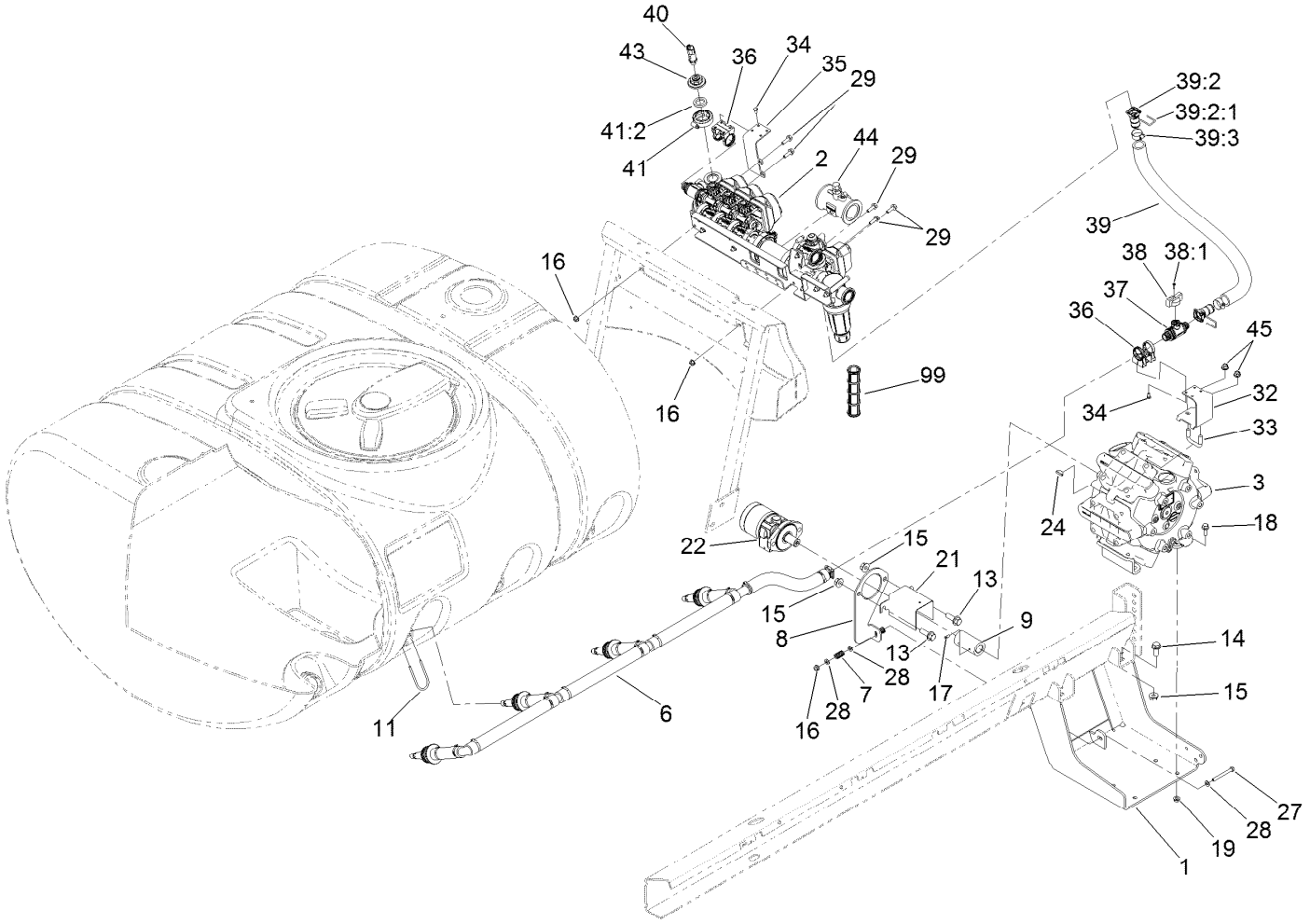

Spray Pump and Valve Assembly

Ref.	Part Number	Qty.	Description
1	117-0655-03	1	Bracket-Pump
2		1	Spray Manifold ASM ●
3	132-7768	1	Pump
6	132-4309	1	Agitation Hose ASM
7	110-5331	2	Spring-Compression
8	117-8040-03	1	Plate-Mount, Motor
9	117-8045	1	Coupler
11	100-8635	4	Fork
13	100-6116	2	Screw-HHF
14	110-5057	4	Capscrew-HHF
15	108-3745	6	Nut-HHF, Whiz
16	104-8300	6	Nut-HF, NI
17	3241-7	4	Screw-SQH
18	3234-11	4	Screw-HHF
19	3290-357	4	Nut-HHF, Whiz
21	120-0628-03	1	Guard-Shaft, Pump
22	117-0706	1	HYD Motor ASM
24	106-1990	1	Key-Woodruff

Ref.	Part Number	Qty.	Description
27	322-14	1	Screw-HH
28	3256-23	5	Washer-Plain
29	3234-29	5	Screw-HHF
32	136-0376-03	1	Bracket-Valve, Agitation
33	107-3073	1	U-Bolt
34	33113-012	8	Screw-HH
35	136-2286-03	1	Mount-Plate, Support
36	132-4302	2	Mount-Valve
37	131-0249	1	On/Off 2-Way Valve Kit
38	131-0264	1	Agitation Throttling Handle Kit
38:1	131-0263	1	Screw-Handle
39	132-4310	1	Agiation Supply Hose ASM
39:2	127-9806	2	Fitting Kit
39:2:1	133-0398	1	Pin-Fork
39:3	2412-34	2	Clamp-Hose
40	130-8202	1	Transducer-Pressure
41	127-9829	1	Clamp/Gasket Kit

● Not serviced separately

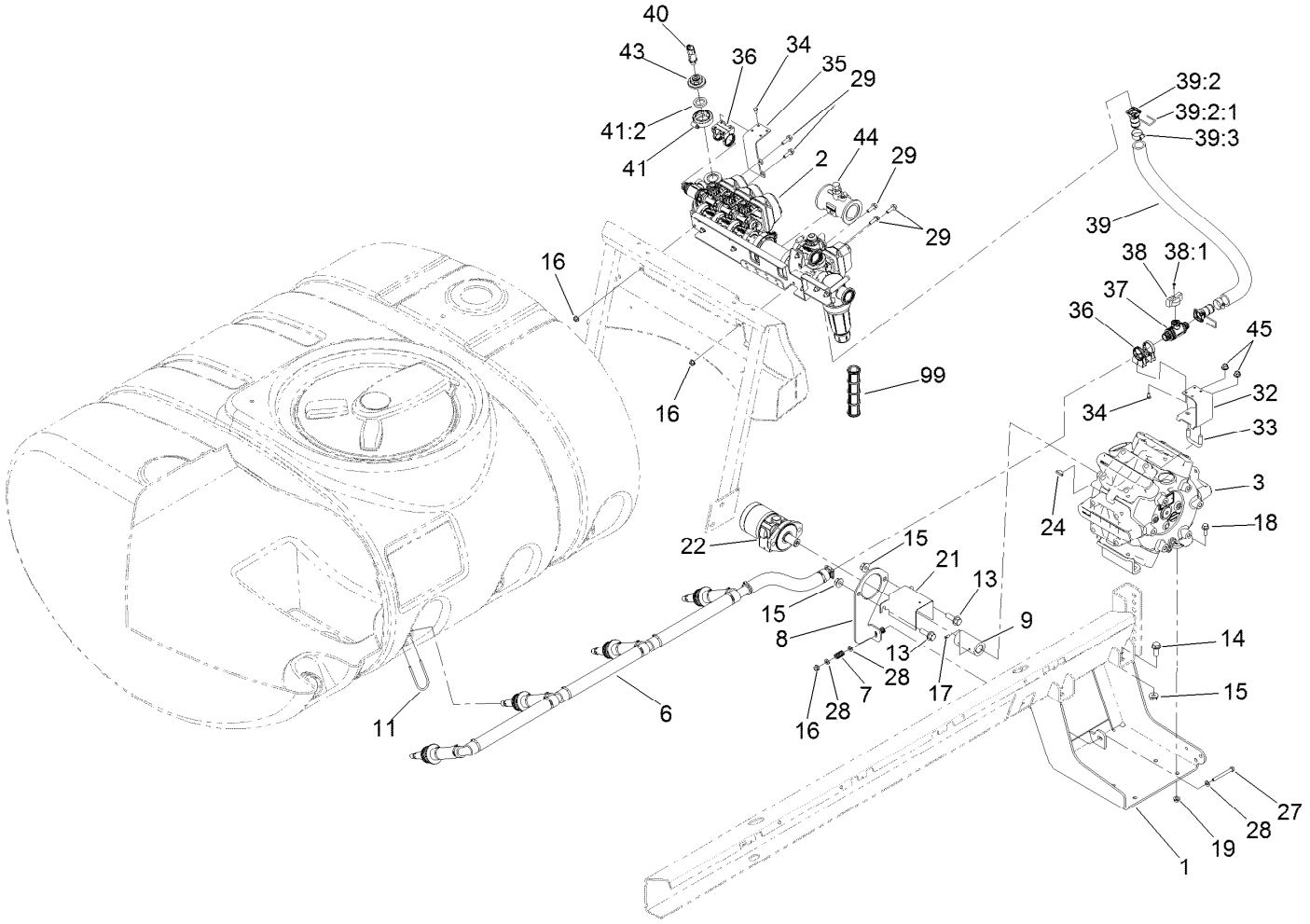

Spray Pump and Valve Assembly (continued)

Ref.	Part Number	Qty.	Description
41:2	127-1145	1	Gasket-Flange
43	127-1185	1	Fitting-Cap, Port
44	106-1038	1	Flow Meter ASM

Ref.	Part Number	Qty.	Description
45	104-8301	2	Nut-HF, NI
99	133-0385	2	Screen-Teejet, 50 Mesh

● Not serviced separately

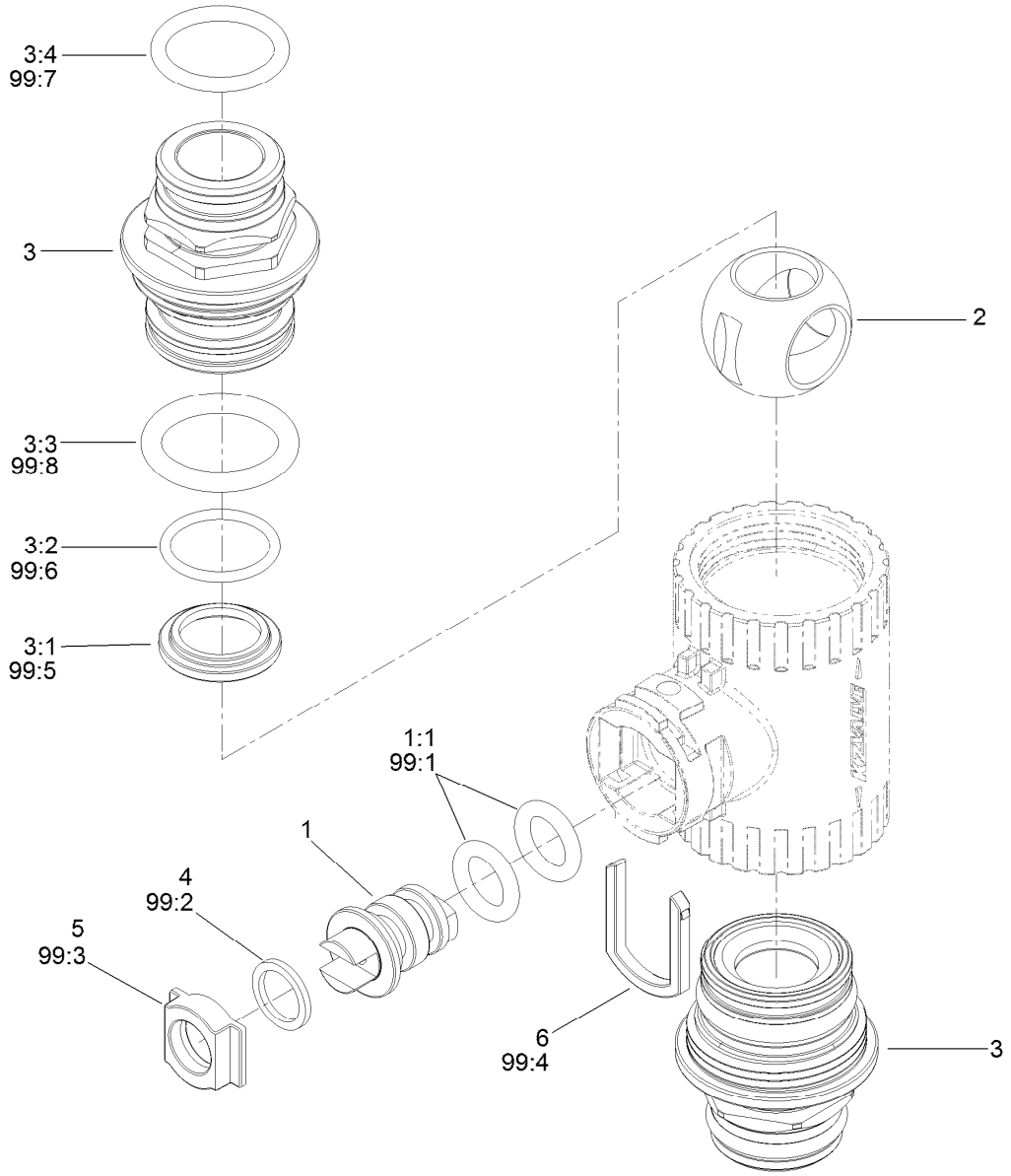

On/Off 2-Way Valve Kit No. 131-0249

Ref.	Part Number	Qty.	Description
1	130-8248	1	Vavle Stem Kit
1:1	127-1197	2	O-Ring-Stem
2	131-0252	1	Ball-2-Way
3	130-7317	2	Endcap Kit
3:1	127-1192	1	Seat-Ball
3:2	127-1188	1	O-Ring, Seat (Ball)
3:3	127-1189	1	O-Ring, Endcap
3:4	127-1187	1	O-Ring, Endcap
4	127-1196	1	Washer-Stem, Valve
5	127-1195	1	Seat-Stem, Valve

Ref.	Part Number	Qty.	Description
6	127-1190	1	Fork-Stem, Valve
99	130-7304	1	Valve Repair Kit ●
99:1	127-1197	2	O-Ring-Stem
99:2	127-1196	2	Washer-Stem, Valve
99:3	127-1195	1	Seat-Stem, Valve
99:4	127-1190	1	Fork-Stem, Valve
99:5	127-1192	2	Seat-Ball
99:6	127-1188	2	O-Ring, Seat (Ball)
99:7	127-1187	2	O-Ring, Endcap
99:8	127-1189	2	O-Ring, Endcap

● Not illustrated

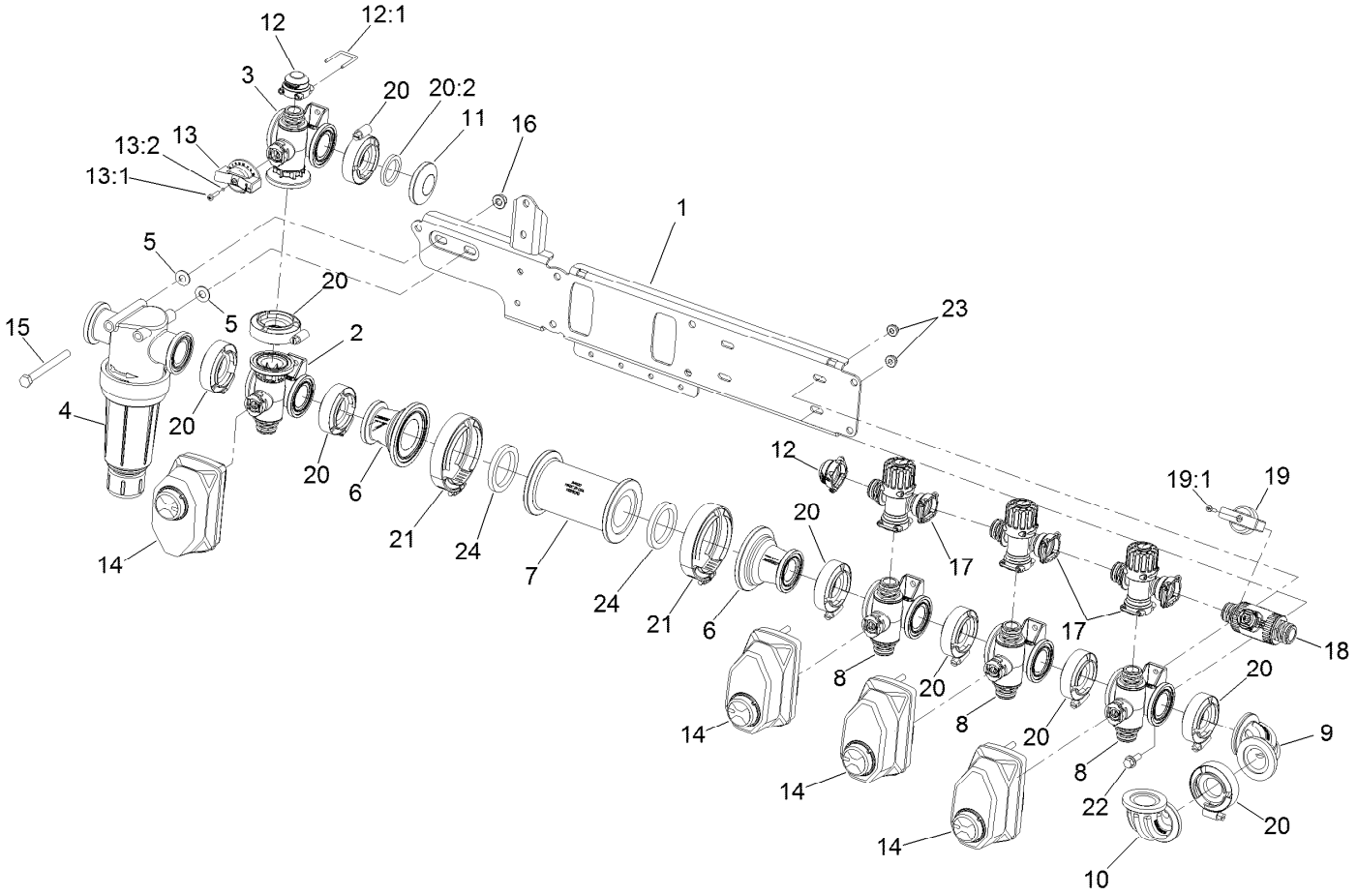

Spray Manifold Assembly

Ref.	Part Number	Qty.	Description
1	133-2852	1	Valve Mount ASM
2	131-7256	1	Manifold Valve Kit
3	131-0253	1	Manifold Valve Kit
4	131-3791	1	Filter-Pressure
5	107-0279	2	Washer
6	127-1144	2	Fitting-Adapter
7	131-3739	1	Adapter
8	127-9803	3	On/Off Manifold Valve Kit
9	131-3726	1	Fitting-Elbow, 90 DEG
10	130-8297	1	Fitting-Elbow, Sweep
11	127-9815	1	Fitting-Cap
12	127-9811	2	Fitting-Cap, Female
12:1	133-0398	1	Pin-Fork
13	131-0265	1	Agitation Regulating Handle Kit

Ref.	Part Number	Qty.	Description
13:1	131-0263	1	Screw-Handle
13:2	127-1197	1	O-Ring-Stem
14	131-3723	4	Actuator On/Off Kit
15	322-22	2	Screw-HH
16	104-8300	2	Nut-HF, NI
17	127-9805	3	Bypass Valve ASM
18	131-0249	1	On/Off 2-Way Valve Kit
19	131-0267	1	Bypass Handle Kit
19:1	131-0263	1	Screw-Handle
20	127-9829	9	Clamp/Gasket Kit
20:2	127-1145	1	Gasket-Flange
21	104-9089	2	Clamp-Screw, Worm
22	3234-4	8	Screw-HHF
23	104-7201	8	Nut-HF
24	104-9090	2	Gasket

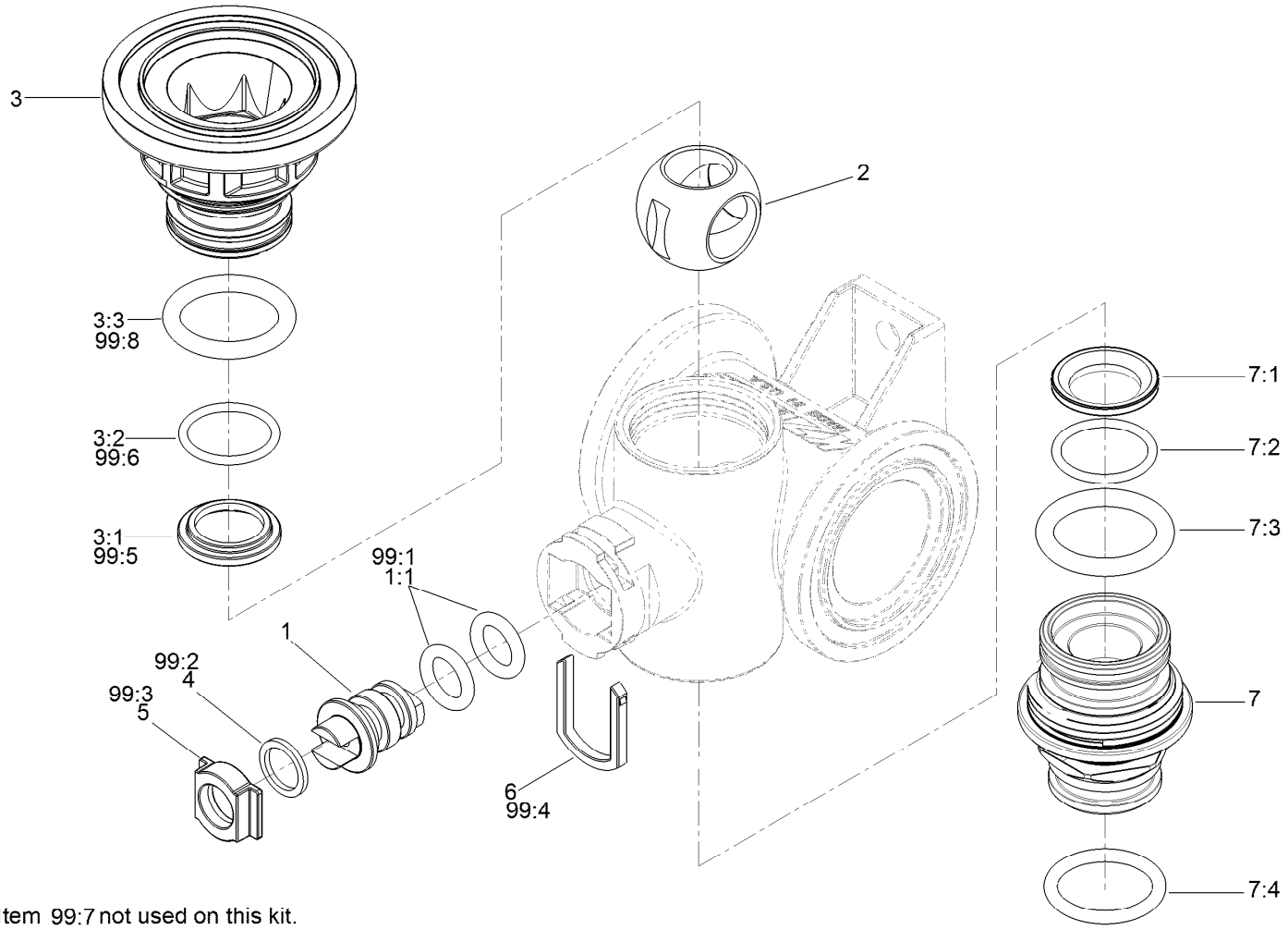

Item 99:7 not used on this kit.

Manifold Valve Kit No. 131-7256

Ref.	Part Number	Qty.	Description
1	130-8248	1	Vavle Stem Kit
1:1	127-1197	2	O-Ring-Stem
2	127-1194	1	Ball-Valve, 3Way
3	130-8249	1	Endcap Kit
3:1	127-1192	1	Seat-Ball
3:2	127-1188	1	O-Ring, Seat (Ball)
3:3	127-1189	1	O-Ring, Endcap
4	127-1196	1	Washer-Stem, Valve
5	127-1195	1	Seat-Stem, Valve
6	127-1190	1	Fork-Stem, Valve
7	130-7317	1	Endcap Kit
7:1	127-1192	1	Seat-Ball

Ref.	Part Number	Qty.	Description
7:2	127-1188	1	O-Ring, Seat (Ball)
7:3	127-1189	1	O-Ring, Endcap
7:4	127-1187	1	O-Ring, Endcap
99	130-7304	1	Valve Repair Kit ●
99:1	127-1197	2	O-Ring-Stem
99:2	127-1196	2	Washer-Stem, Valve
99:3	127-1195	1	Seat-Stem, Valve
99:4	127-1190	1	Fork-Stem, Valve
99:5	127-1192	2	Seat-Ball
99:6	127-1188	2	O-Ring, Seat (Ball)
99:7	127-1187	2	O-Ring, Endcap
99:8	127-1189	2	O-Ring, Endcap

● Not illustrated

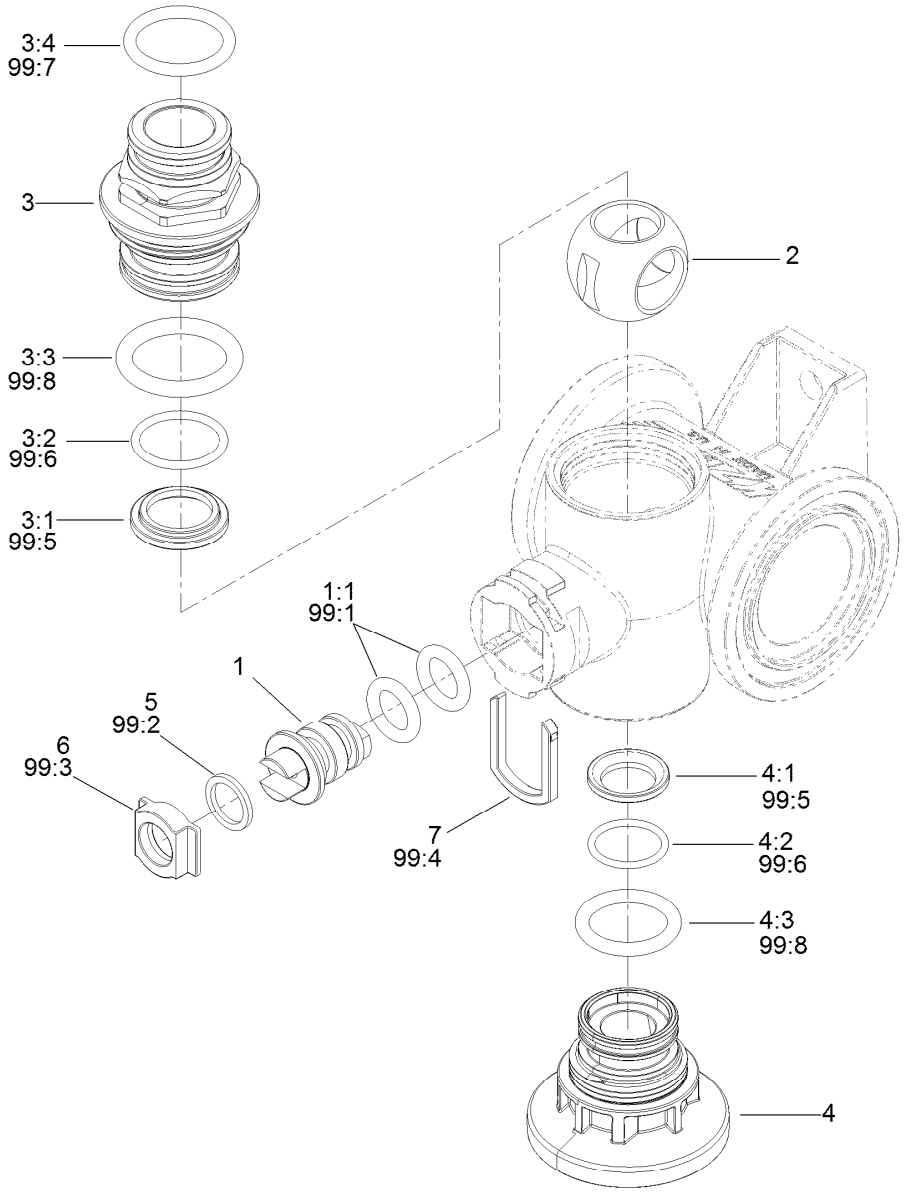

Manifold Valve Kit No. 131-0253

Ref.	Part Number	Qty.	Description
1	130-8248	1	Vavle Stem Kit
1:1	127-1197	2	O-Ring-Stem
2	127-1113	1	Ball-V
3	130-7317	1	Endcap Kit
3:1	127-1192	1	Seat-Ball
3:2	127-1188	1	O-Ring, Seat (Ball)
3:3	127-1189	1	O-Ring, Endcap
3:4	127-1187	1	O-Ring, Endcap
4	130-8249	1	Endcap Kit
4:1	127-1192	1	Seat-Ball
4:2	127-1188	1	O-Ring, Seat (Ball)
4:3	127-1189	1	O-Ring, Endcap

Ref.	Part Number	Qty.	Description
5	127-1196	1	Washer-Stem, Valve
6	127-1195	1	Seat-Stem, Valve
7	127-1190	1	Fork-Stem, Valve
99	130-7304	1	Valve Repair Kit ●
99:1	127-1197	2	O-Ring-Stem
99:2	127-1196	2	Washer-Stem, Valve
99:3	127-1195	1	Seat-Stem, Valve
99:4	127-1190	1	Fork-Stem, Valve
99:5	127-1192	2	Seat-Ball
99:6	127-1188	2	O-Ring, Seat (Ball)
99:7	127-1187	2	O-Ring, Endcap
99:8	127-1189	2	O-Ring, Endcap

● Not illustrated

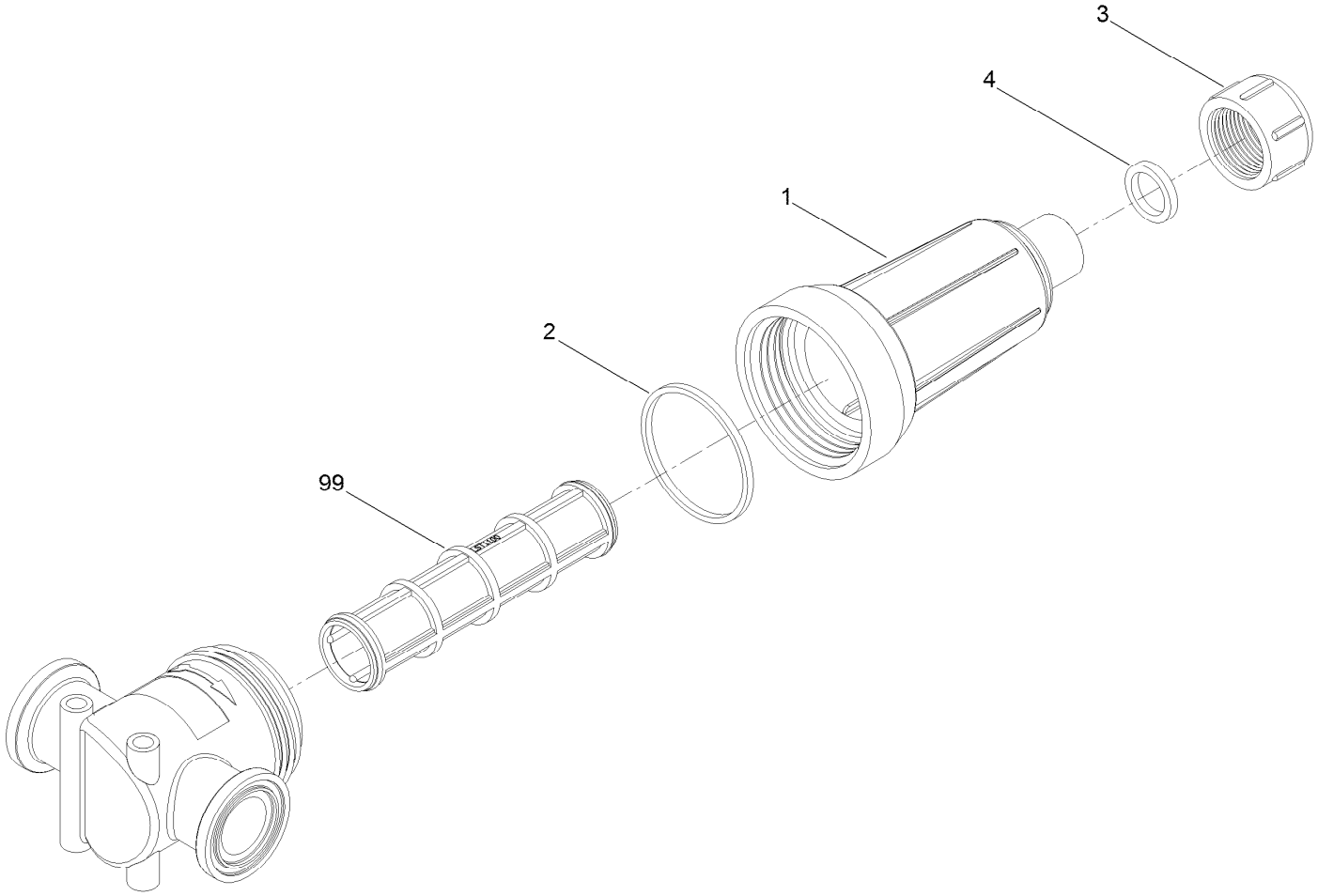

Pressure Filter Assembly No. 131-3791

Ref.	*Part Number*	*Qty.*	*Description*
1	136-0397	1	Bowl-Strainer
2	136-0398	1	Rubber-Gasket
3	136-0410	1	Strainer Cap
4	136-0399	1	Rubber-Gasket
99	133-0384	1	Screen-Teejet, 30 Mesh
99	133-0385	1	Screen-Teejet, 50 Mesh
99	133-0386	1	Screen-Teejet, 80 Mesh
99	133-0387	1	Screen-Teejet, 100 Mesh

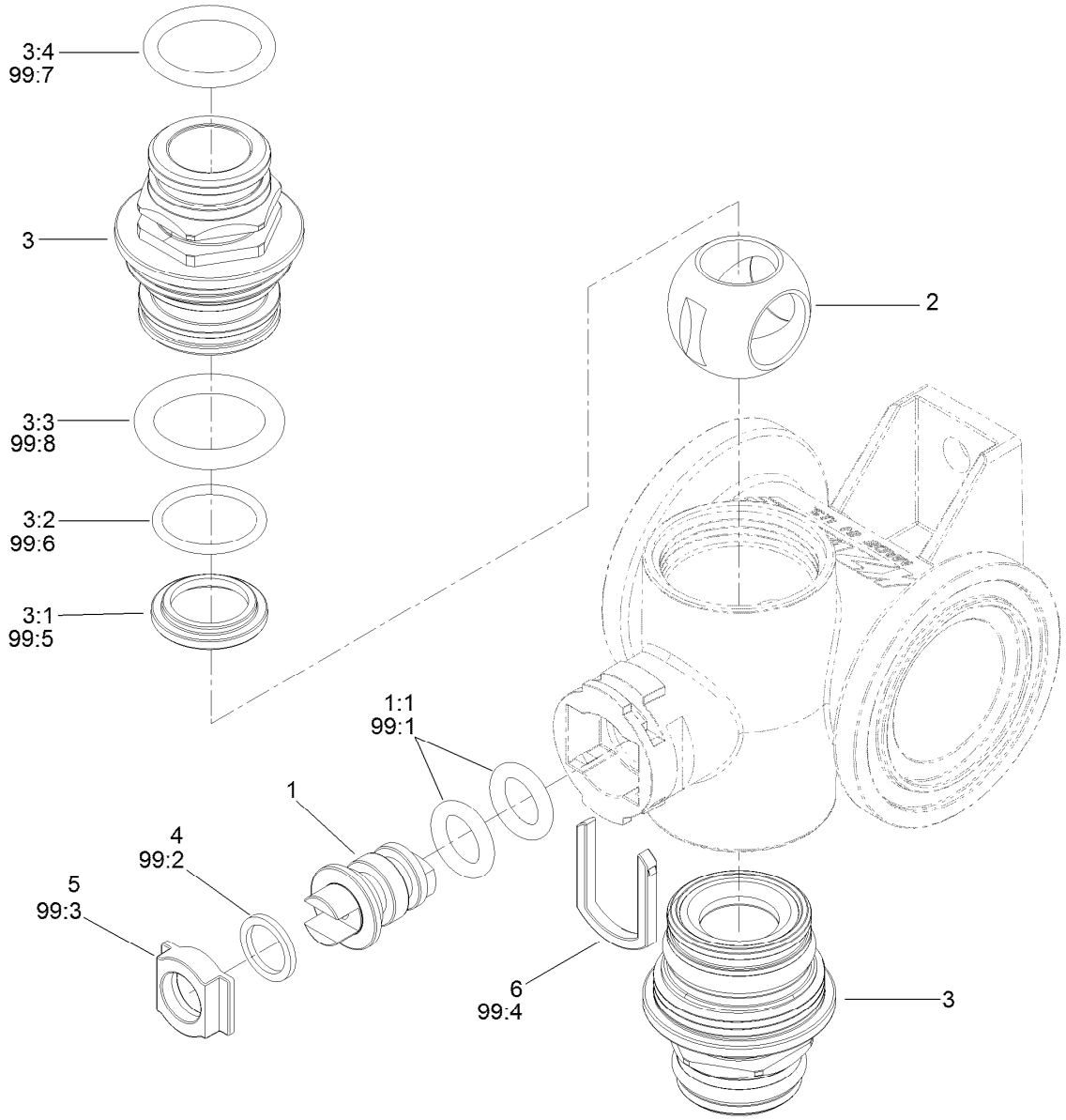

On/Off Manifold Valve Kit No. 127-9803

Ref.	Part Number	Qty.	Description
1	130-8248	1	Vavle Stem Kit
1:1	127-1197	2	O-Ring-Stem
2	127-1194	1	Ball-Valve, 3Way
3	130-7317	2	Endcap Kit
3:1	127-1192	1	Seat-Ball
3:2	127-1188	1	O-Ring, Seat (Ball)
3:3	127-1189	1	O-Ring, Endcap
3:4	127-1187	1	O-Ring, Endcap
4	127-1196	1	Washer-Stem, Valve
5	127-1195	1	Seat-Stem, Valve

Ref.	Part Number	Qty.	Description
6	127-1190	1	Fork-Stem, Valve
99	130-7304	1	Valve Repair Kit ●
99:1	127-1197	2	O-Ring-Stem
99:2	127-1196	2	Washer-Stem, Valve
99:3	127-1195	1	Seat-Stem, Valve
99:4	127-1190	1	Fork-Stem, Valve
99:5	127-1192	2	Seat-Ball
99:6	127-1188	2	O-Ring, Seat (Ball)
99:7	127-1187	2	O-Ring, Endcap
99:8	127-1189	2	O-Ring, Endcap

● Not illustrated

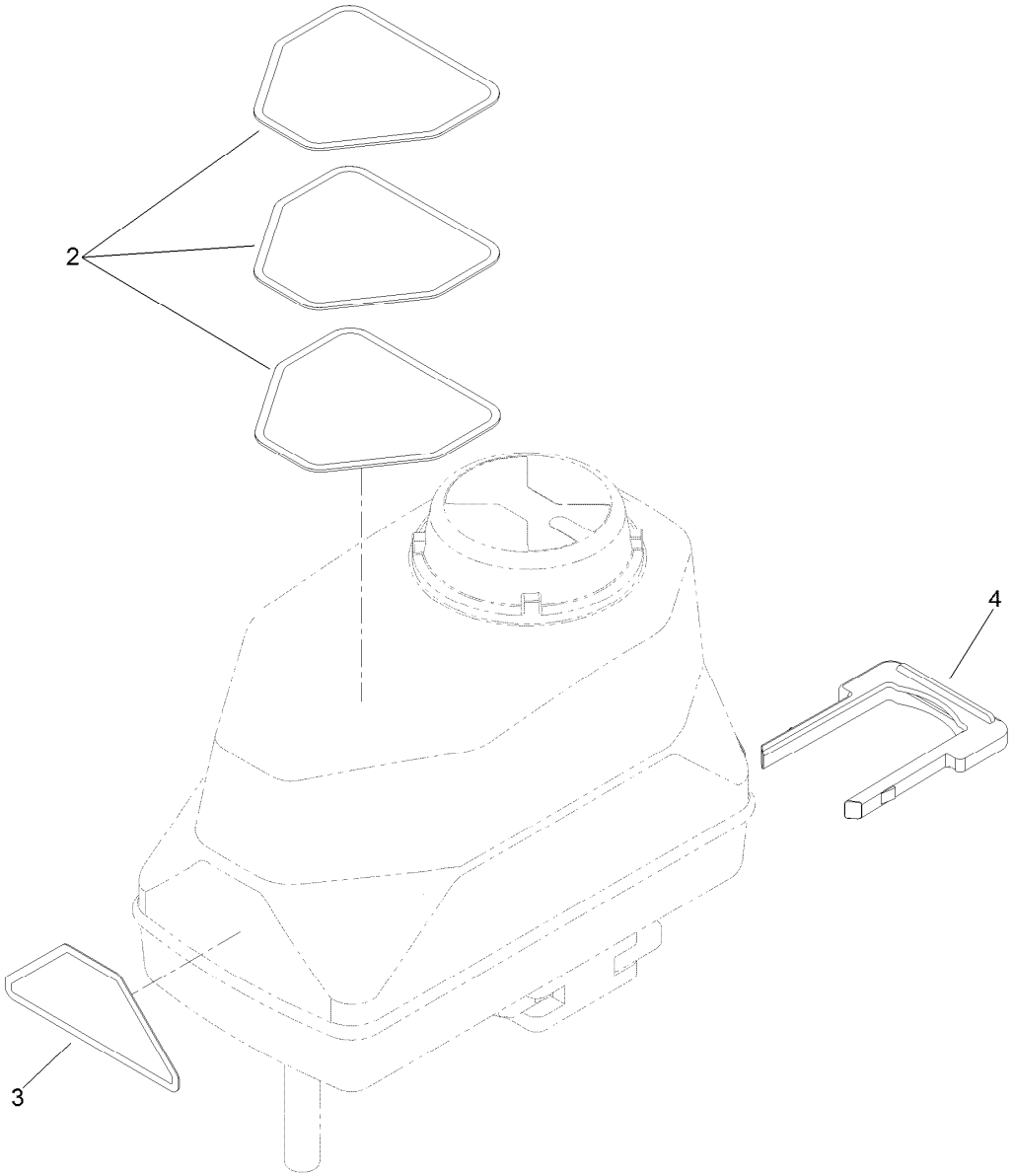

On/Off Actuator Kit No. 131-3723

Ref.	Part Number	Qty.	Description
2	127-6979	1	Decal-Valve, Agitation
2	127-6981	1	Decal-Valve, On/Off
2	127-6982	1	Decal-Valve, Master Boom
3	127-6976	1	Decal-Valve, Bypass Adjust
4	130-7301	1	Hairpin-Actuator

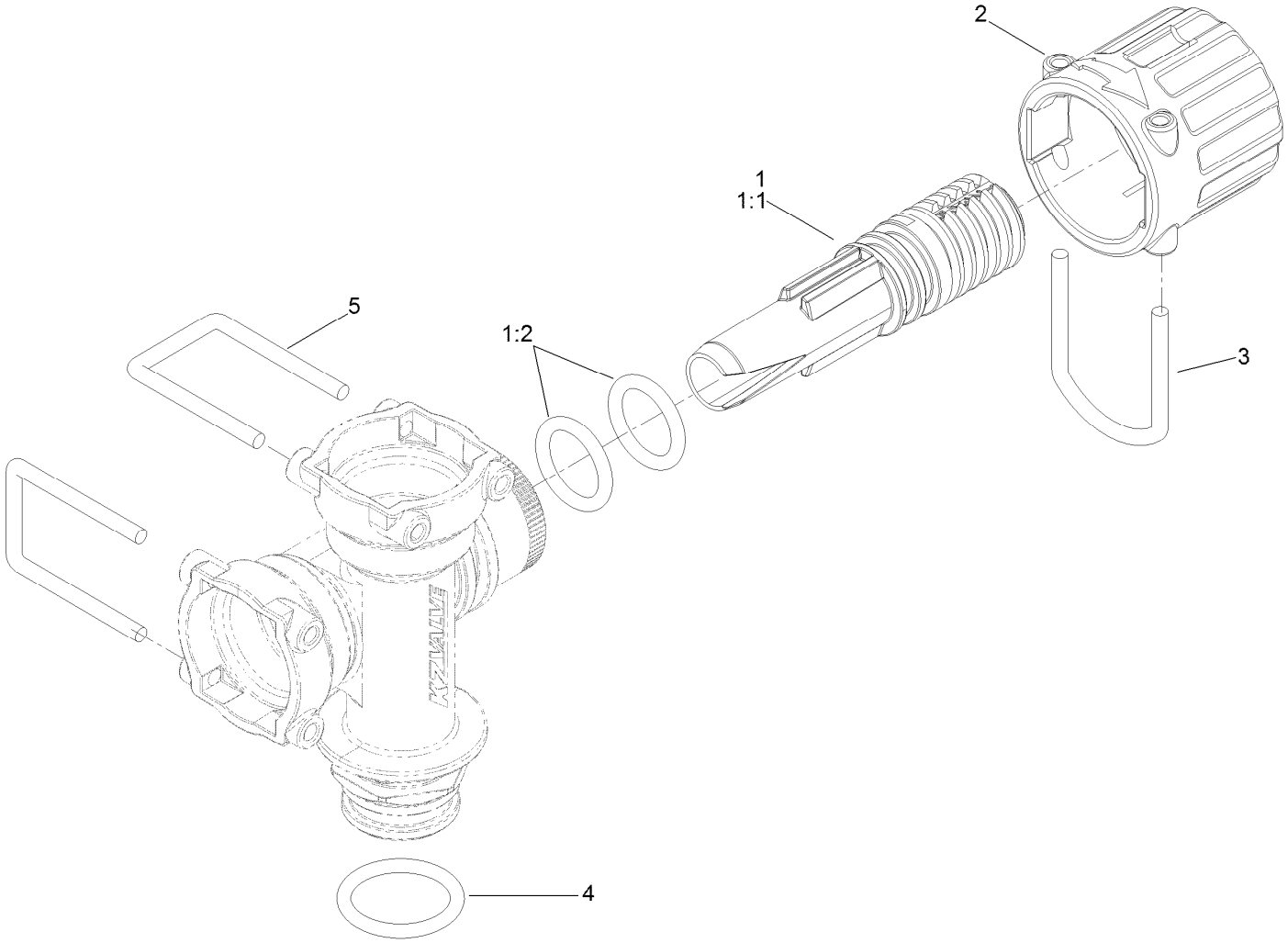

Bypass Valve Assembly No. 127-9805

Ref.	*Part Number*	*Qty.*	*Description*
1	131-0298	1	Bypass Needle Kit
1:1	127-1182	1	Needle-Bypass
1:2	127-1181	2	Oring-Bypass Needle
2	127-1180	1	Knob-Bypass
3	127-1179	1	Fork-Bypass Knob
4	127-1187	1	O-Ring, Endcap
5	133-0398	2	Pin-Fork

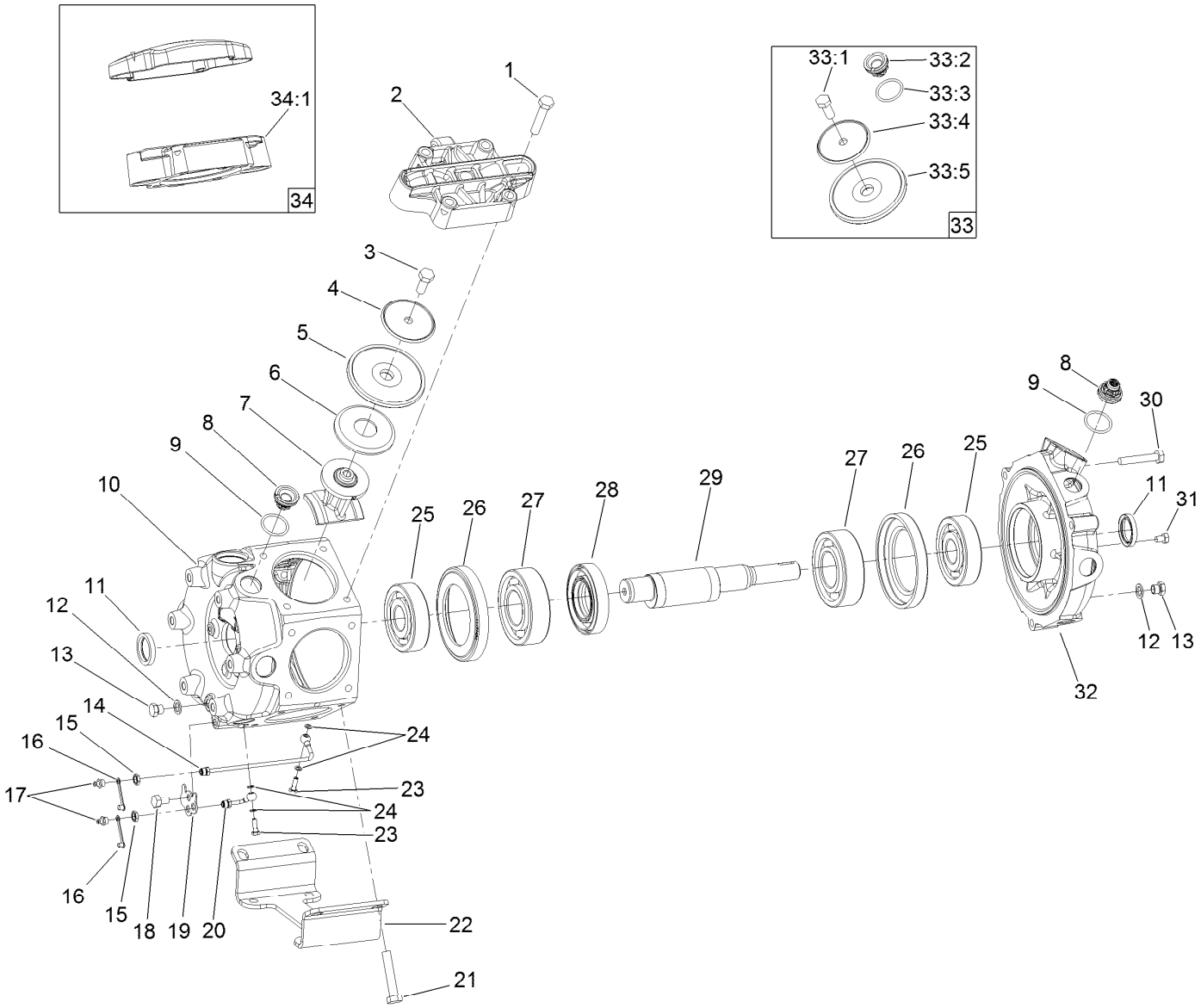

Pump Assembly No. 132-7768

Ref.	Part Number	Qty.	Description
1	120-0773	20	Bolt-Hex
2	133-2824	6	Cover-Pump, Hardened
3	120-0777	6	Bolt-Hex
4	120-0778	6	Disc-Diaphragm
5	120-0779	6	Diaphragm
6	120-0780	6	Disc-Backing, Diaphragm
7	120-0781	6	Rod-Connecting
8	99-0861	12	Valve-Pump
9	100-6651	12	O-Ring
10	133-2821	1	Housing-Pump, Main
11	120-0783	2	Seal-Oil
12	120-0786	2	Seal
13	120-0785	2	Plug
14	133-2877	1	Tube-Banjo, Long
15	133-2878	2	Nut
16	133-2880	2	Cap-Grease Nipple, Yellow
17	133-2879	2	Nipple-Grease
18	136-2252	1	Bolt-Hex
19	133-2875	1	Plate-Nipple, Grease
20	133-2876	1	Tube-Banjo, Short

Ref.	Part Number	Qty.	Description
21	120-0774	4	Bolt-Hex
22	136-2250	1	Foot-Pump
23	133-2830	2	Bolt-Banjo
24	136-2251	4	Gasket
25	120-0788	2	Bearing-Ball
26	133-2820	2	Spacer-Metal
27	120-0791	2	Bearing-Ball
28	133-2827	1	Distance Ring
29	133-2825	1	Shaft-Crank
30	120-0794	3	Bolt-Hex
31	120-0784	4	Bolt-Hex
32	133-2822	1	Housing-Pump, Front
33	133-2885	1	Pump Repair Kit
33:1	120-0777	6	Bolt-Hex
33:2	99-0861	12	Valve-Pump
33:3	100-6651	12	O-Ring
33:4	120-0778	6	Disc-Diaphragm
33:5	120-0779	6	Diaphragm
34	133-2898	1	Pump Head Kit
34:1	133-2824	6	Cover-Pump, Hardened

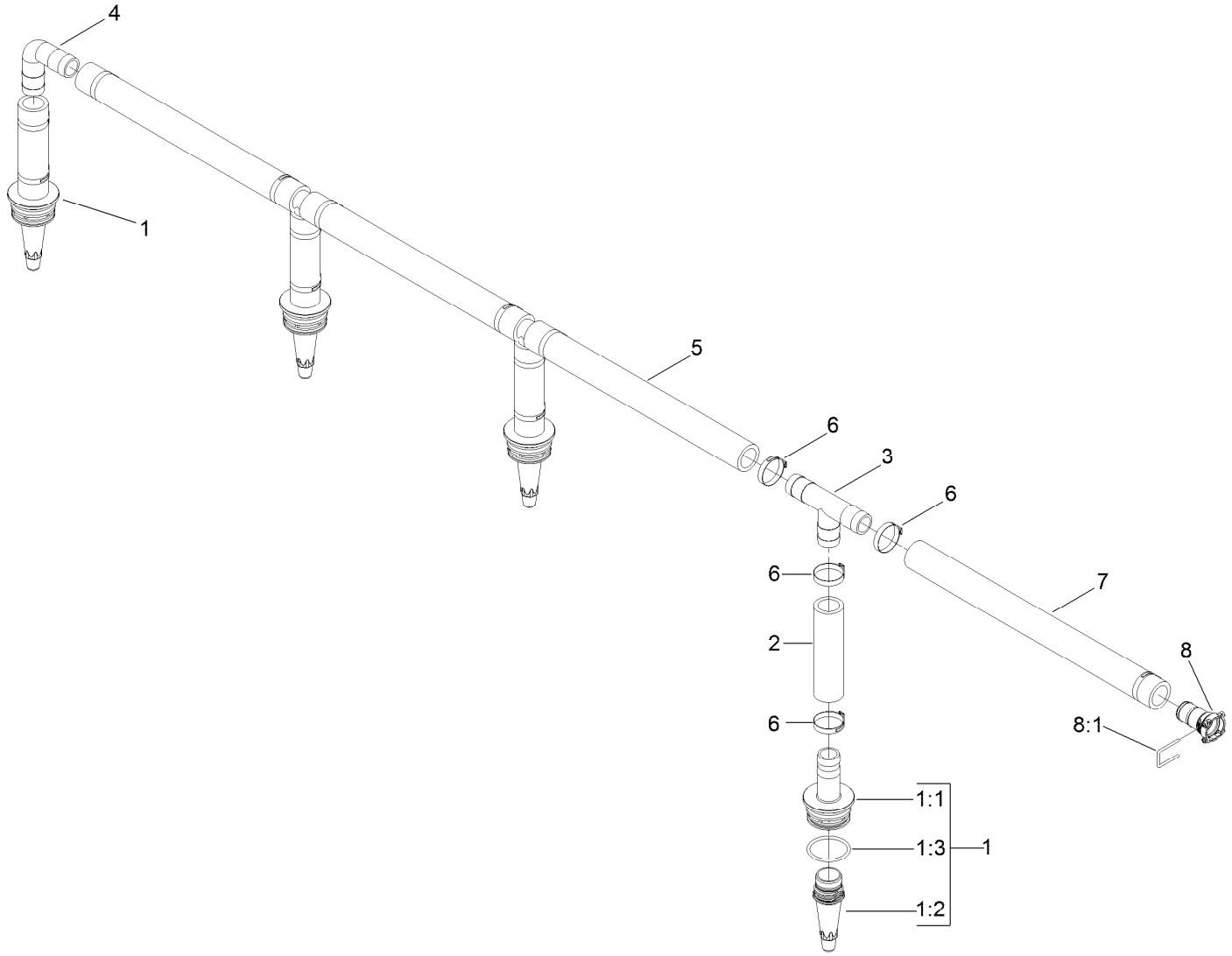

Agitation Hose Assembly No. 132-4309

Ref.	*Part Number*	*Qty.*	*Description*
1	131-3731	4	Agitation Nozzle ASM
1:1	131-3732	1	Fitting-Barb
1:2	120-8579	1	Nozzle-Agitation
1:3	121-4996	1	O-Ring
2	119-0441	4	Hose-Agitaiton
3	117-7866	3	Tee-Hosebarb
4	117-7867	1	Elbow-Hosebarb
5	117-7862	3	Hose-Main Agitation
6	2412-3	16	Clamp-Hose
7	132-4311	1	Hose-Agitation
8	127-9806	1	Fitting Kit
8:1	133-0398	1	Pin-Fork

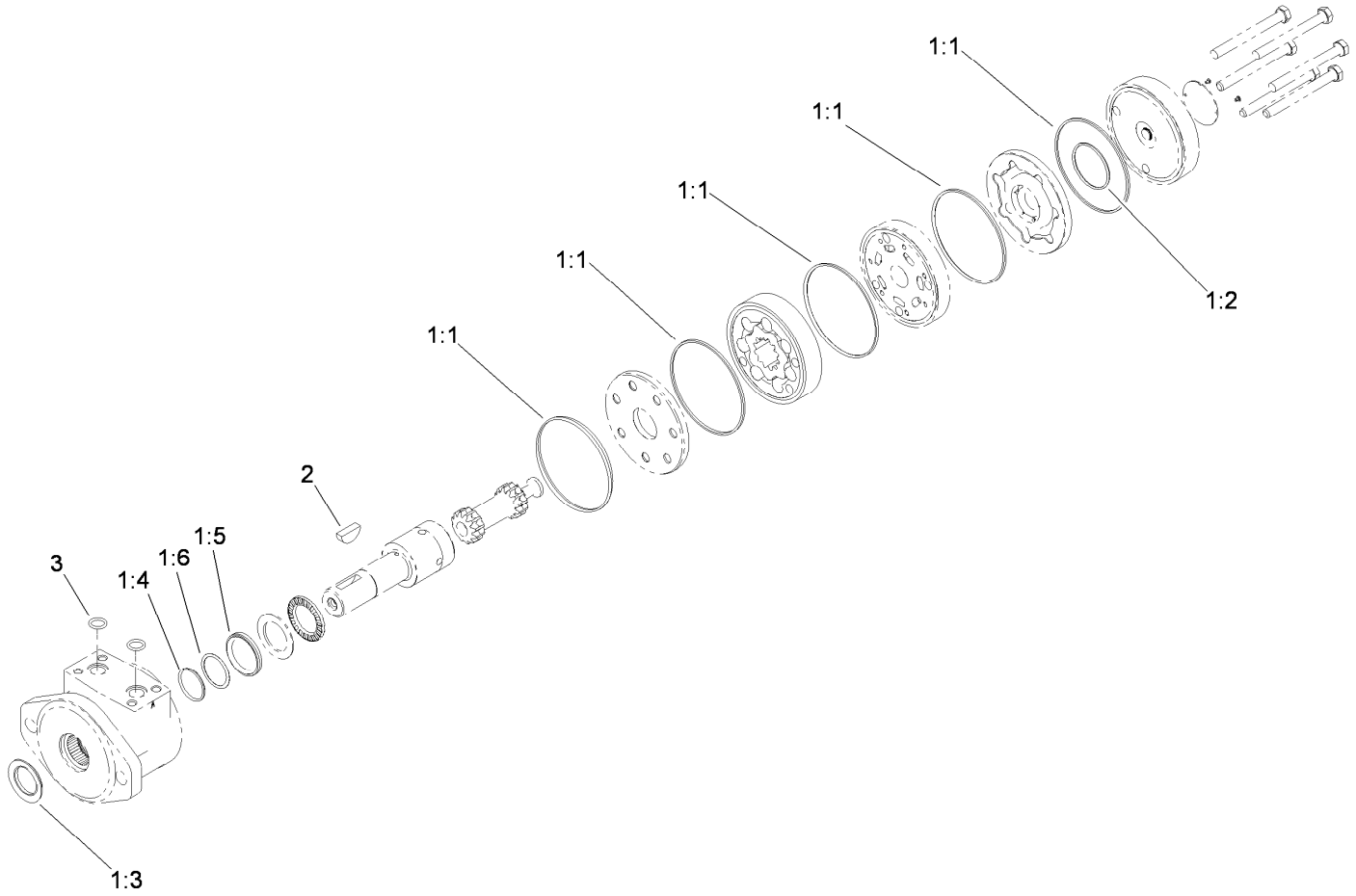

Hydraulic Motor Assembly No. 117-0706

Ref.	*Part Number*	*Qty.*	*Description*
1	119-0433	1	Wheel Motor Seal Kit ●
1:1		5	Seal-Ring ■
1:2		1	Seal-Commutator ■
1:3		1	Seal-Dirt And Water ■
1:4		1	Ring-Backing ■
1:5		1	Seal-Shaft ■
1:6		1	Washer-Backup ■
2	3257-8	1	Key-Woodruff
3	120-0691	2	O-Ring

● Not illustrated

■ Not serviced separately

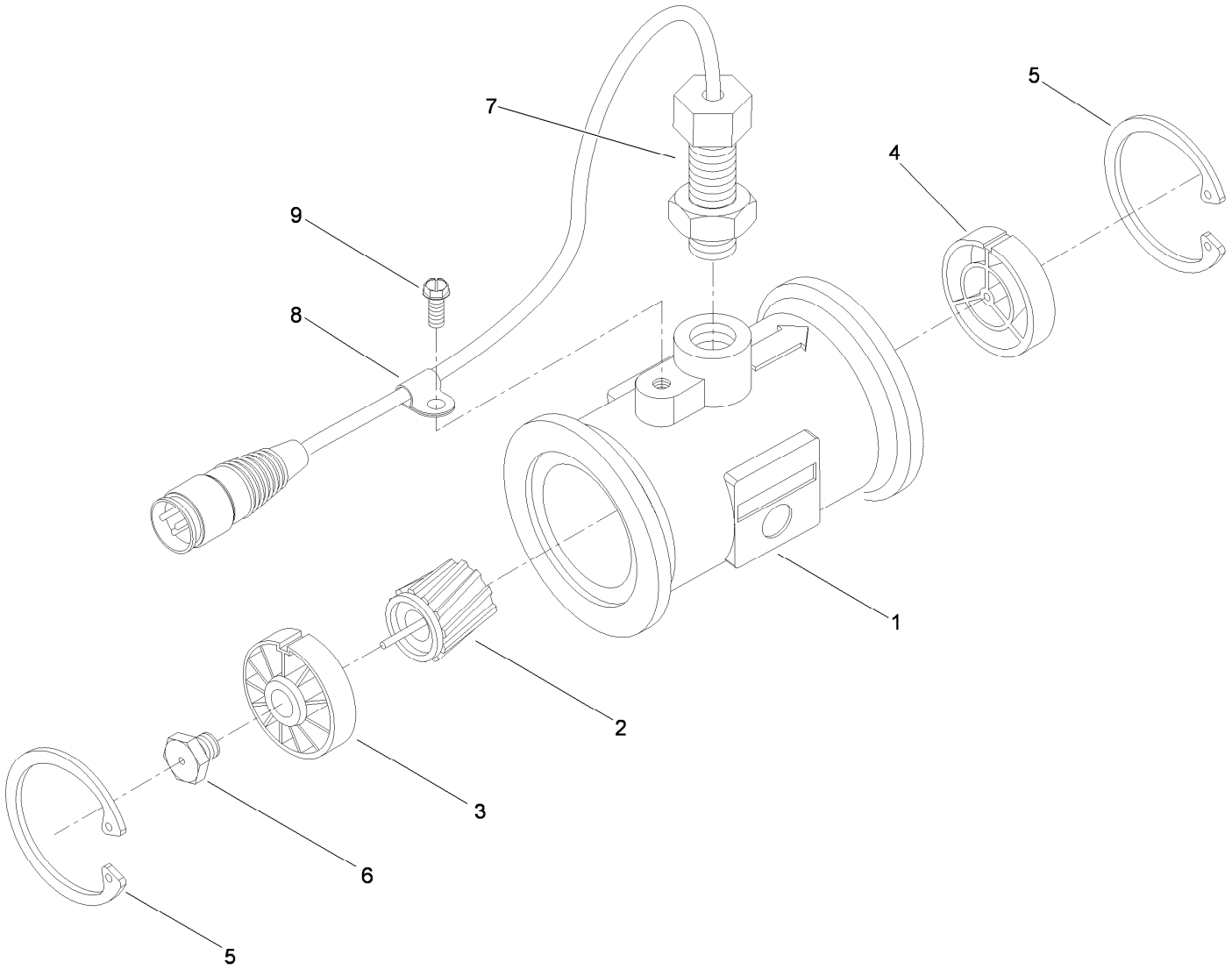

Flow Meter Assembly No. 106-1038

Ref.	*Part Number*	*Qty.*	*Description*
1	106-1042	1	Body-Meter, Flow
2	104-9059	1	Rotor / Magnet ASM
3	104-9060	1	Upstream Hub And Bearing ASM
4	104-9061	1	Downstream Hub ASM
5	104-9062	2	Ring-Retaining, Internal
6	42480	1	Stud-Turbine (W / Bearing)
7	104-9065	1	External Sensor ASM
8	104-9063	1	Clamp-Cable
9	104-9064	1	Screw-HWHTF

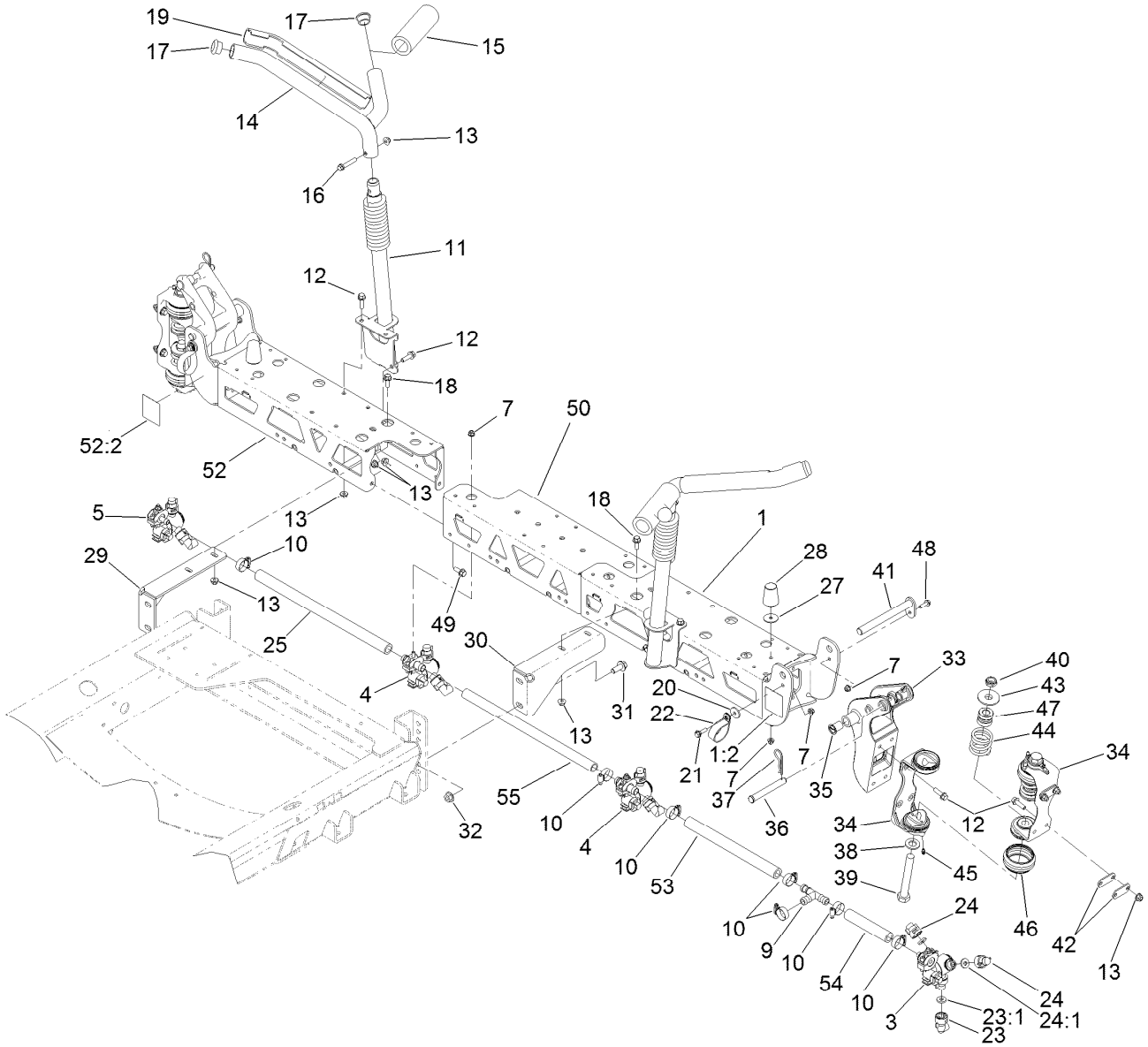

Center Boom Assembly

Ref.	Part Number	Qty.	Description
1	136-0381	1	Boom-LH
1:2	120-0617	2	Decal-Warning, Pinch, Crush
3	108-3725	1	LH Single Body Turret ASM
4	108-3727	2	Double Turret Body ASM
5	108-3726	1	RH Single Body Turret ASM
7	104-8300	10	Nut-HF, NI
9	108-3439	1	Tee
10	2412-129	7	Clamp-Hose
11	130-8238-03	2	Lower Cradle ASM
12	110-5050	22	Screw-HHF
13	104-8301	32	Nut-HF, NI
14	108-3476-03	2	Cradle-Upper
15	108-3457	2	Spacer
16	108-3742	2	Screw-HHF
17	108-3489	4	Cap-Tube
18	110-5052	4	Screw-HHF
19	108-3495	2	Cover-Slide
20	108-3743	2	Washer
21	108-3744	2	Screw-Shoulder
22	114-9566	2	Clamp-R

Ref.	Part Number	Qty.	Description
23	95-9186	4	Cap
23:1	40998	1	Seat-Gasket
24	95-9187	8	Cap-Blank
24:1	40998	1	Seat-Gasket
25	108-3735	1	Hose-Boom, Center (LH)
27	3256-68	2	Washer-Flat
28	110-5070	2	Bumper
29	127-8955-03	1	Mount-Boom
30	127-8956-03	1	Mount-Boom
31	110-5057	4	Capscrew-HHF
32	108-3745	4	Nut-HHF, Whiz
33	119-4993-03	2	Bracket-Pivot
34	108-3471-03	4	Hinge
35	100-8541	4	Bushing-A Arm
36	108-3436	2	Pin-Clevis
37	3290-468	2	Pin-Cotter
38	110-5054	4	Washer-Flat
39	108-3738	4	Screw-HH
40	3296-15	4	Nut-Lock, NI
41	108-3419	2	Pivot Pin ASM
42	108-3605	8	Plate-Backing

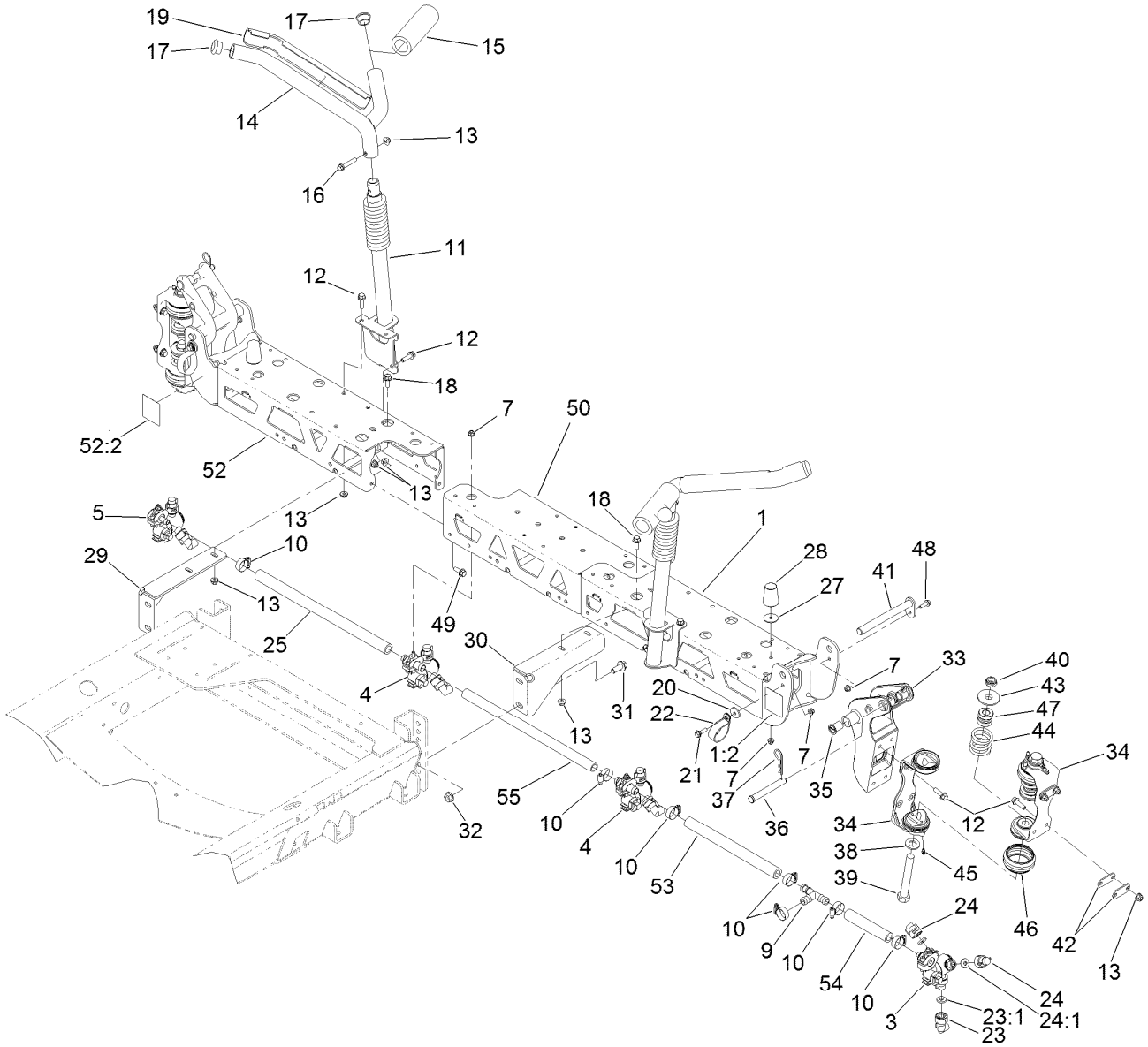

Center Boom Assembly (continued)

Ref.	Part Number	Qty.	Description
43	108-3444	4	Retainer-Spring
44	108-3440	4	Spring-Breakaway, Boom
45	302-5	8	Fitting-Grease
46	108-3459	4	Boot-Hinge
47	120-8541	4	Dampener-Hinge
48	108-3748	2	Screw-HHF
49	3234-42	4	Screw-HHF

Ref.	Part Number	Qty.	Description
50	133-0412-03	1	Center-Center, Boom
52	136-0382	1	Boom-RH
52:2	120-0617	2	Decal-Warning, Pinch, Crush
53	136-0438	1	Hose-Formed
54	108-3728	1	Hose-Boom
55	40506	1	Hose-Jumper

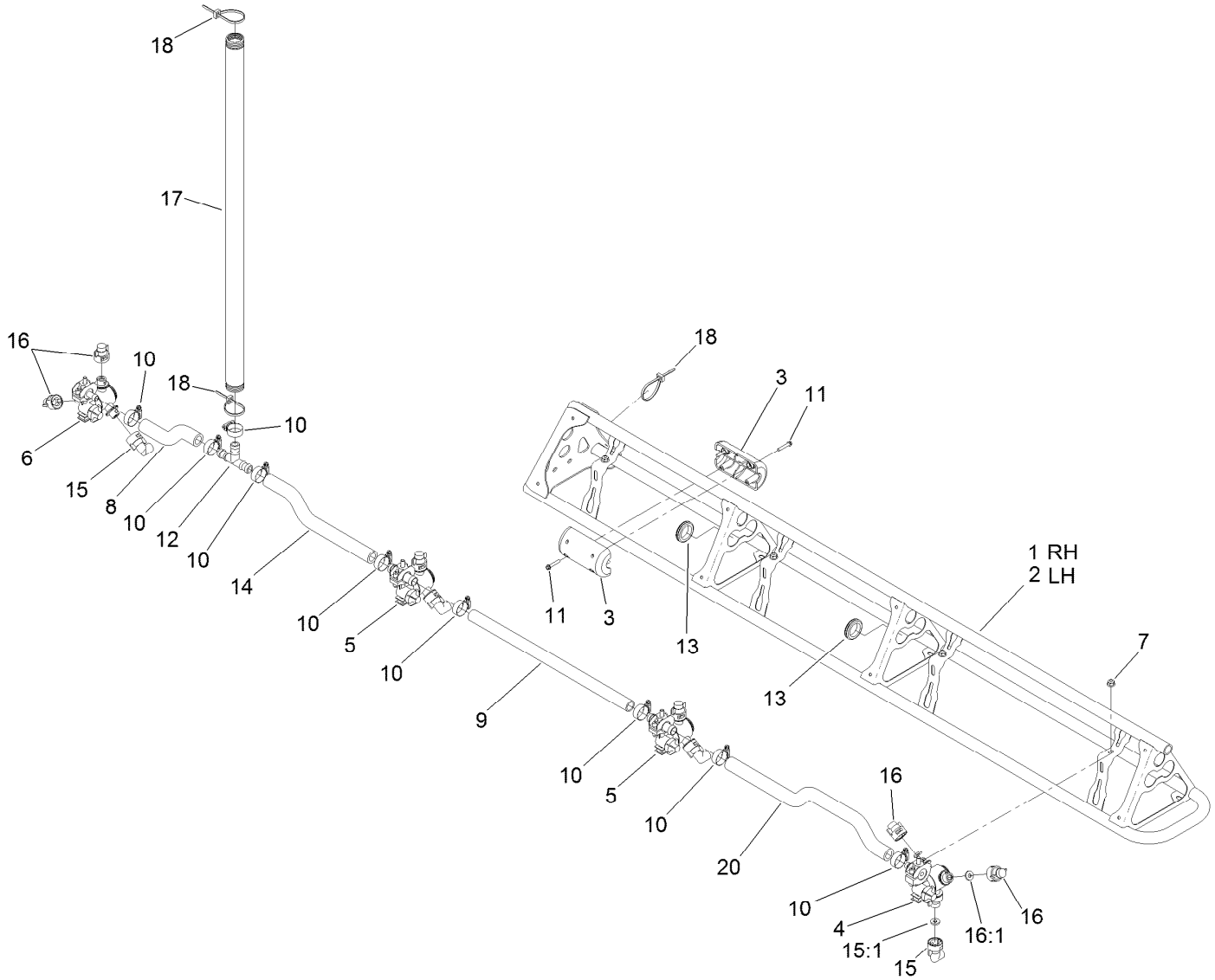

Left and Right Hand Boom Assembly

Ref.	Part Number	Qty.	Description
1	108-3524-03	1	Boom-RH
2	108-3525-03	1	Boom-LH
3	119-9368	4	Block Slide
4	108-3725	2	LH Single Body Turret ASM
5	108-3727	4	Double Turret Body ASM
6	108-3726	2	RH Single Body Turret ASM
7	104-8300	8	Nut-HF, NI
8	136-0437	2	Hose-Formed
9	40506	2	Hose-Jumper
10	2412-129	18	Clamp-Hose
11	119-9369	8	Screw-HHF

Ref.	Part Number	Qty.	Description
12	108-3439	2	Tee
13	240-3	4	Grommet-Rubber
14	136-0436	2	Hose-Formed
15	95-9186	8	Cap
15:1	40998	1	Seat-Gasket
16	95-9187	16	Cap-Blank
16:1	40998	1	Seat-Gasket
17	107-8650	2	Conduit-Convoluted
18	3290-378	6	Tie-Cable
20	108-3735	2	Hose-Boom, Center (LH)

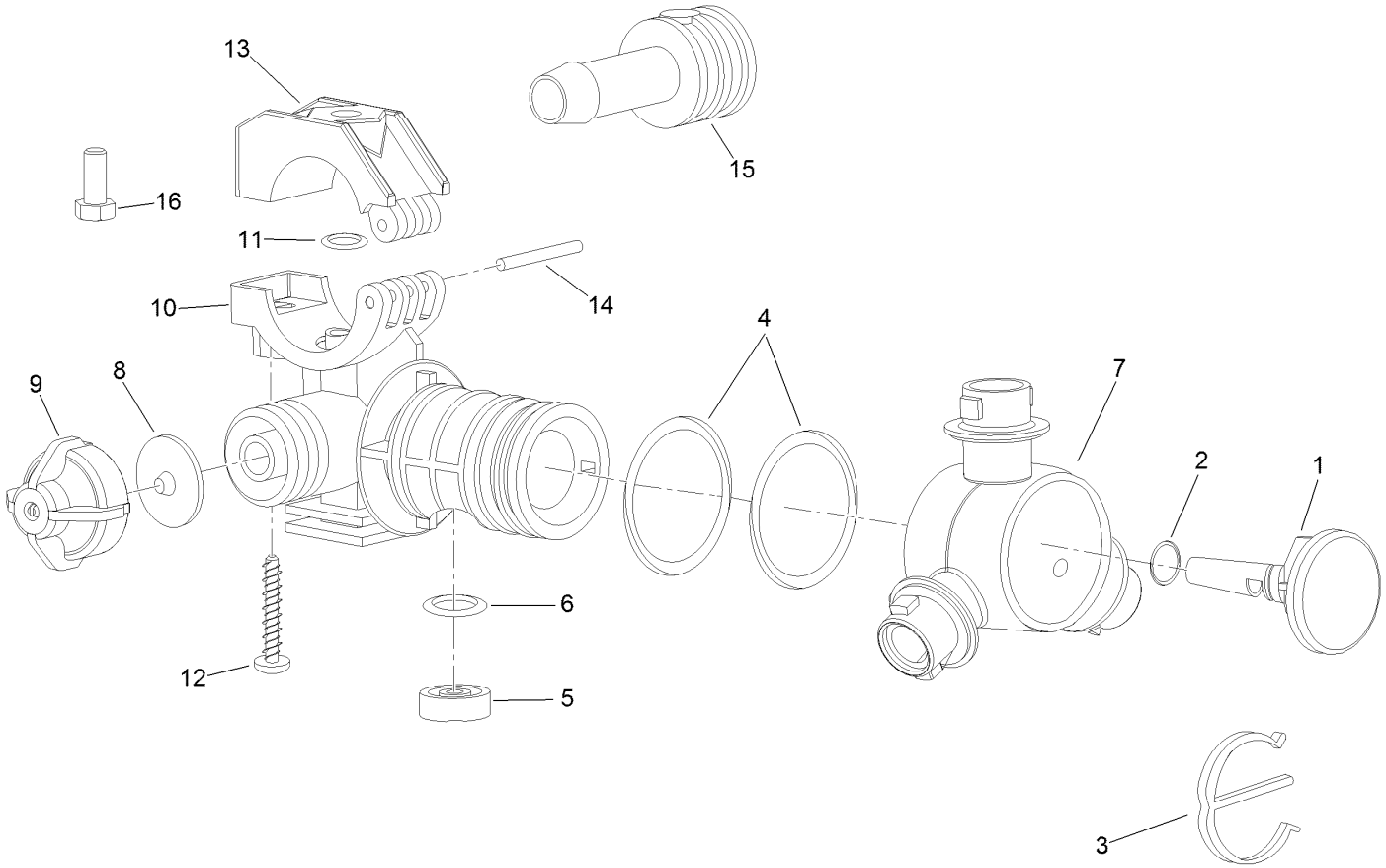

RH Single Body Turret Assembly No. 108-3726

Ref.	Part Number	Qty.	Description
1	95-9200	1	Plug
2	95-9198	1	O-Ring
3	95-9197	1	E-Clip
4	95-9199	2	O-Ring
5	108-3264	1	Seal-Viton
6	108-3265	1	O-Ring-Viton
7	95-9196	1	Turret
8	41003	1	Diaphragm

Ref.	Part Number	Qty.	Description
9	95-9193	1	Cap-Diaphram
10	95-9192	1	Body-Split Eyelet
11	95-9191	1	O-Ring
12	99-0811	1	Screw-Clamp
13	99-0812	1	Clamp-Upper
14	99-0814	1	Pin-Pivot
15	95-9201	1	Shank-Hose
16	322-3	1	Screw-HH

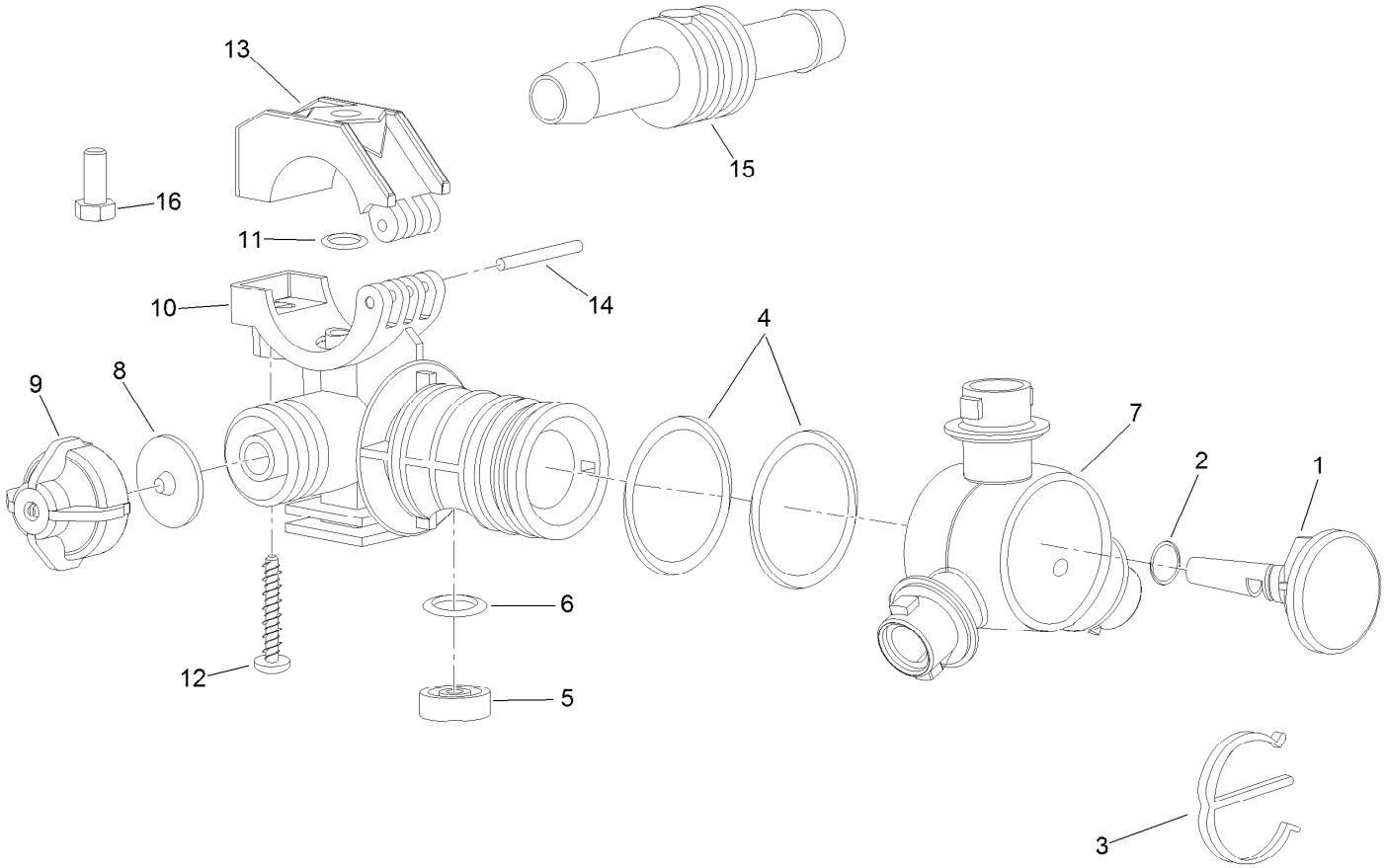

Double Turret Body Assembly No. 108-3727

Ref.	Part Number	Qty.	Description
1	95-9200	1	Plug
2	95-9198	1	O-Ring
3	95-9197	1	E-Clip
4	95-9199	2	O-Ring
5	108-3264	1	Seal-Viton
6	108-3265	1	O-Ring-Viton
7	95-9196	1	Turret
8	41003	1	Diaphragm

Ref.	Part Number	Qty.	Description
9	95-9193	1	Cap-Diaphram
10	95-9192	1	Body-Split Eyelet
11	95-9191	1	O-Ring
12	99-0811	1	Screw-Clamp
13	99-0812	1	Clamp-Upper
14	99-0814	1	Pin-Pivot
15	95-9202	1	Shank-Hose
16	322-3	1	Screw-HH

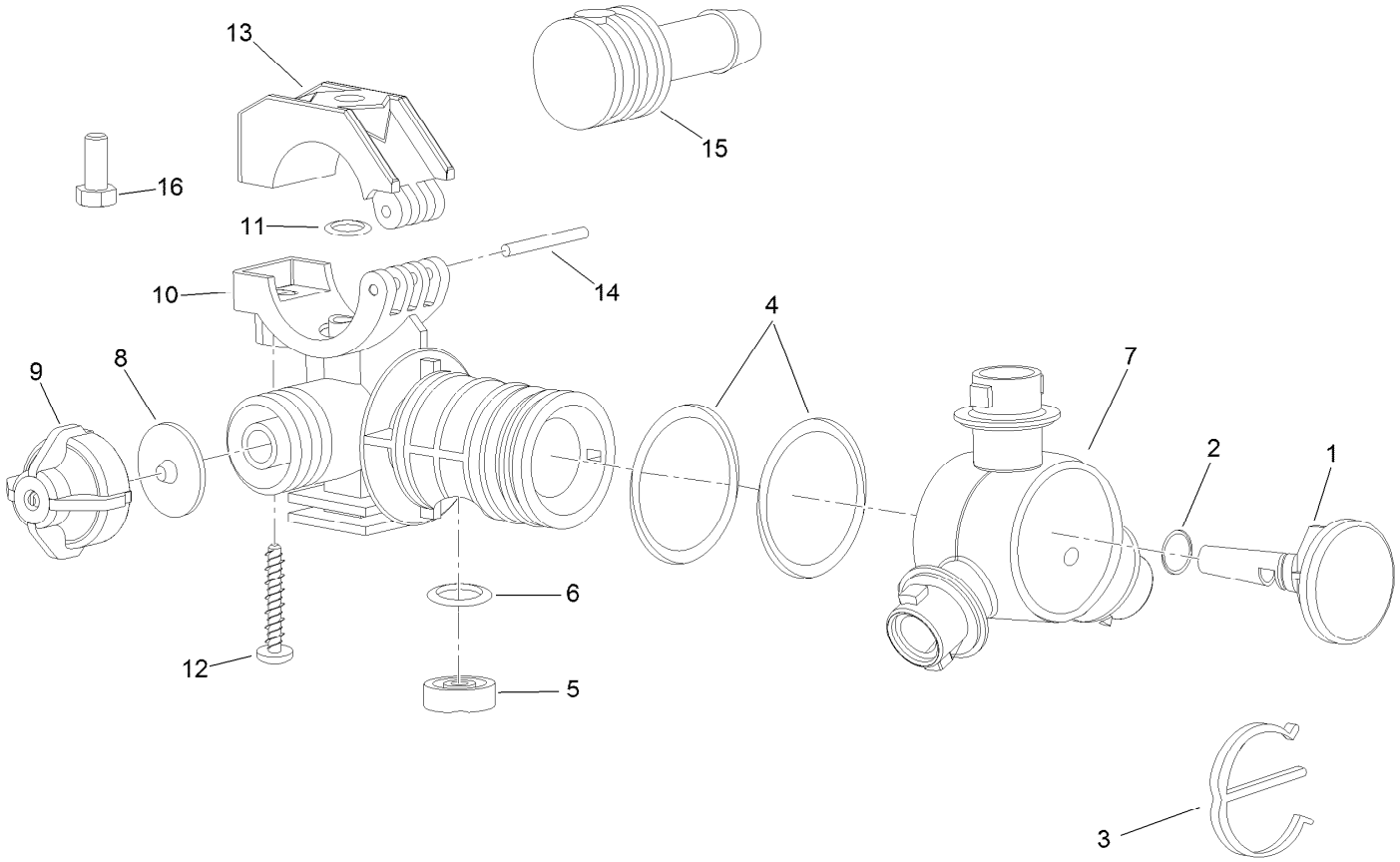

LH Single Turret Body Assembly No. 108-3725

Ref.	Part Number	Qty.	Description
1	95-9200	1	Plug
2	95-9198	1	O-Ring
3	95-9197	1	E-Clip
4	95-9199	2	O-Ring
5	108-3264	1	Seal-Viton
6	108-3265	1	O-Ring-Viton
7	95-9196	1	Turret
8	41003	1	Diaphragm

Ref.	Part Number	Qty.	Description
9	95-9193	1	Cap-Diaphram
10	95-9192	1	Body-Split Eyelet
11	95-9191	1	O-Ring
12	99-0811	1	Screw-Clamp
13	99-0812	1	Clamp-Upper
14	99-0814	1	Pin-Pivot
15	95-9201	1	Shank-Hose
16	322-3	1	Screw-HH

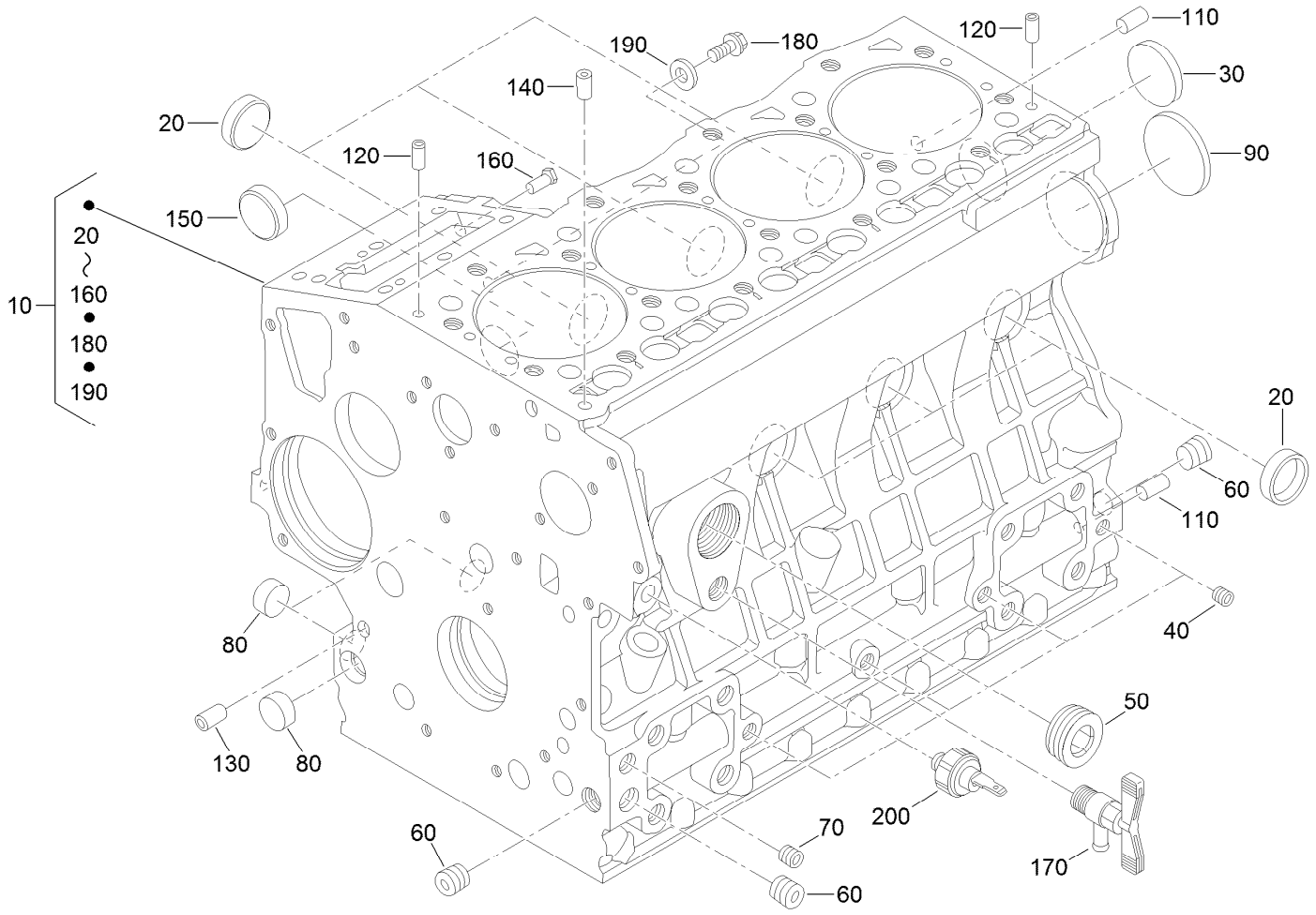

Crankcase Assembly

Ref.	Part Number	Qty.	Description
10	127-0451	1	Crankcase ASM
20	98-9398	6	Cap-Sealing
30	98-7539	1	Cap-Sealing
40	98-9687	4	Plug
50	105-3779	1	Plug
60	98-9597	3	Plug
70	98-7487	2	Plug
80	98-9379	3	Plug-Expansion
90	98-9668	1	Plug-Expansion
110	98-9377	2	Pin-Straight

Ref.	Part Number	Qty.	Description
120	98-9376	2	Pin-Straight
130	98-9387	2	Pin-Pipe
140	98-9539	1	Pin-Pipe
150	98-9599	1	Plug
160	105-3796	1	Pin-Spring, Start
170	120-3121	1	Draincock ASM
180	99-8363	1	Bolt-Flange
190	98-7654	1	Gasket
200	98-9416	1	Switch-Oil

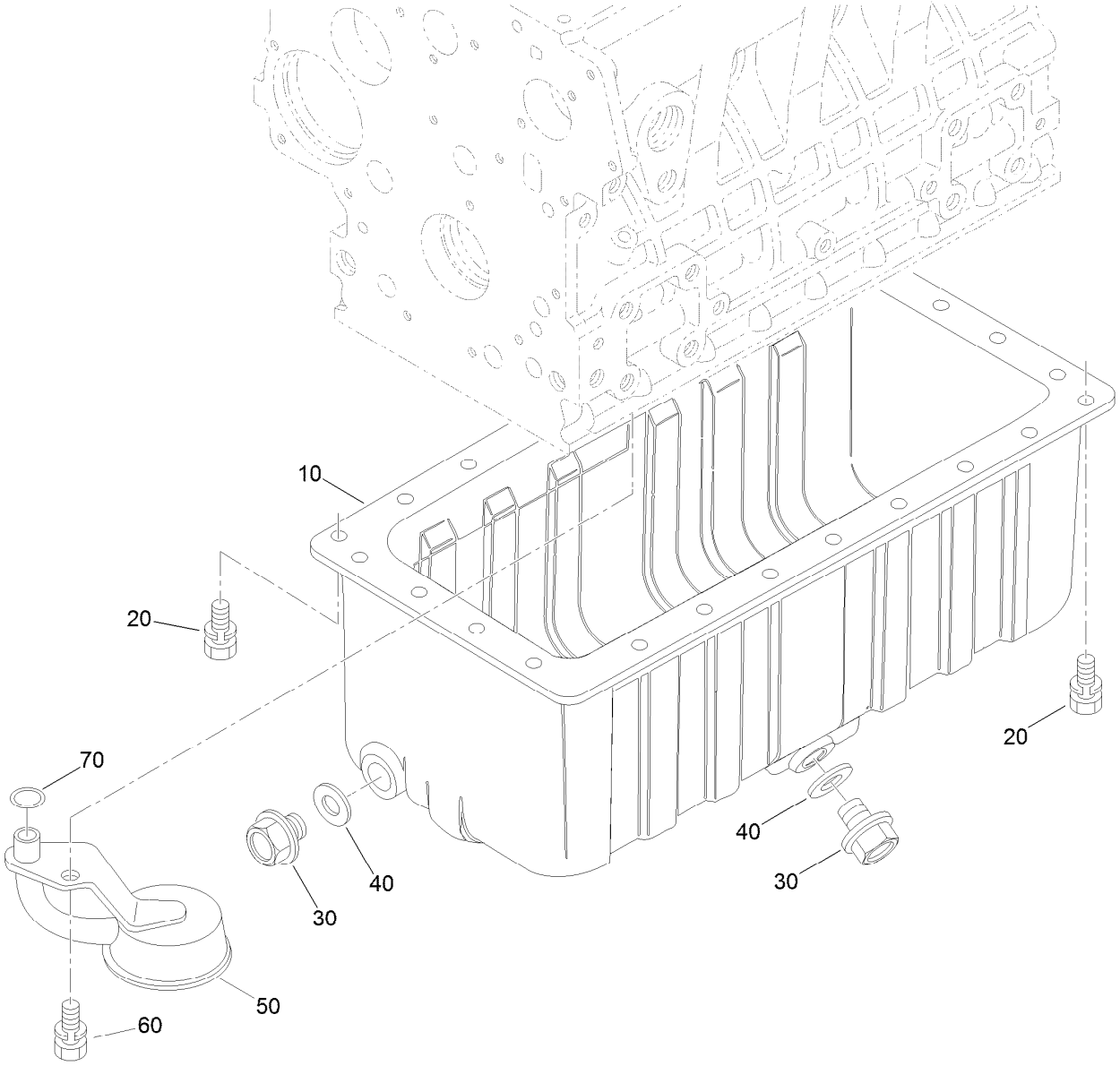

Oil Pan Assembly

Ref.	Part Number	Qty.	Description
10	108-2852	1	Oil Pan ASM
20	98-9351	26	Bolt
30	114-8151	2	Plug-Drain
40	98-7524	2	Gasket
50	112-7003	1	Head-Filter, Oil
60	98-7526	1	Bolt
70	105-3776	1	O-Ring

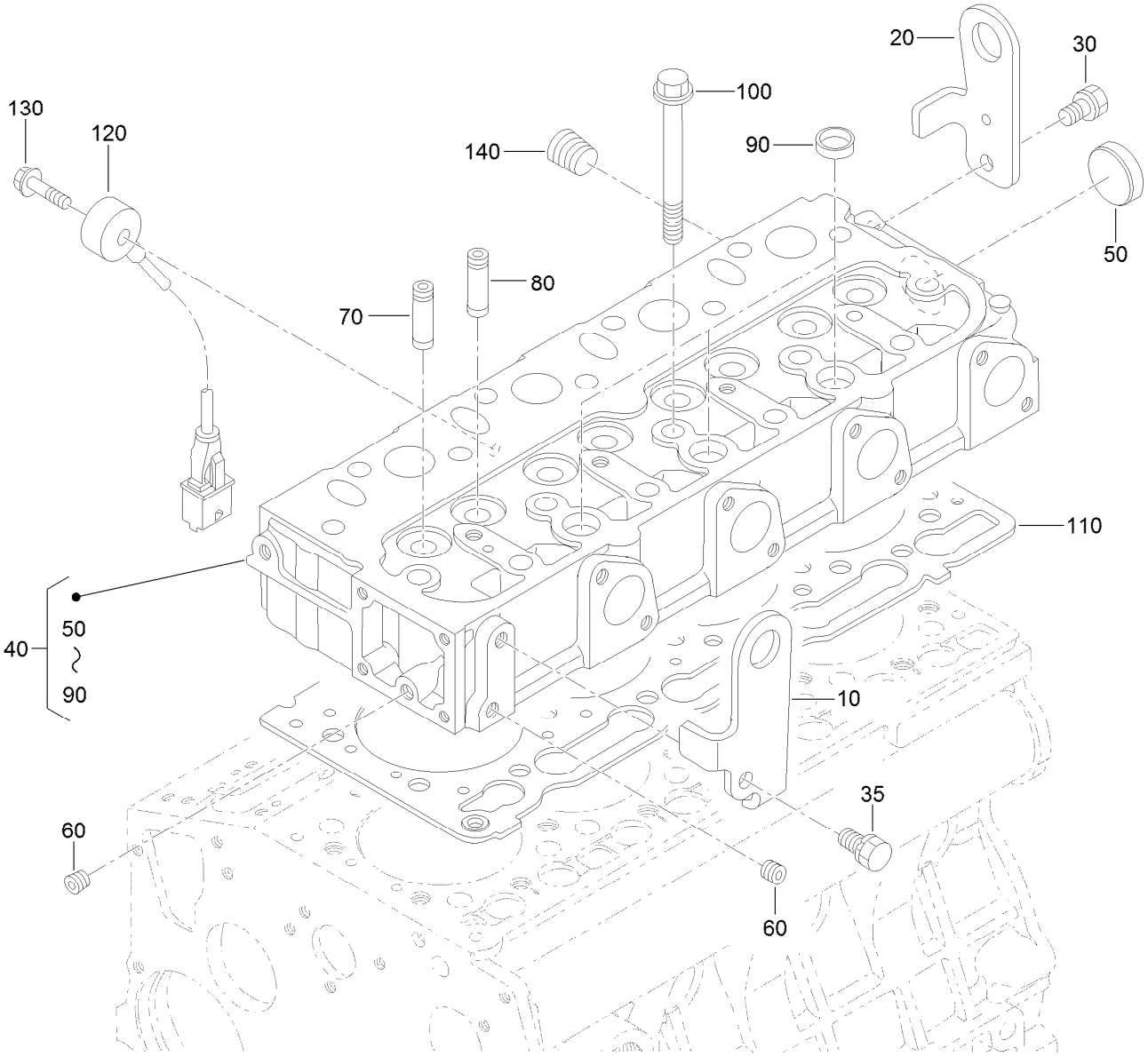

Cylinder Head Assembly

Ref.	Part Number	Qty.	Description
10	127-0463	1	Hook-Engine
20	127-0464	1	Hook-Engine
30	100-9195	1	Bolt
35	98-7526	1	Bolt
40	127-0452	1	Cylinder Head ASM
50	105-3705	1	Cap-Sealing
60	98-9687	2	Plug
70	107-9066	4	Guide-Valve, Inlet
80	127-0478	4	Guide-Valve, Exhaust
90	98-9389	3	Cap-Sealing
100	98-9479	9	Bolt-Head, Cylinder
110	127-0434	1	Gasket-Head, Cylinder
120	127-0467	1	Sensor-Knock
130	127-0506	1	Bolt-Sensor, Knock
140	98-9444	1	Plug

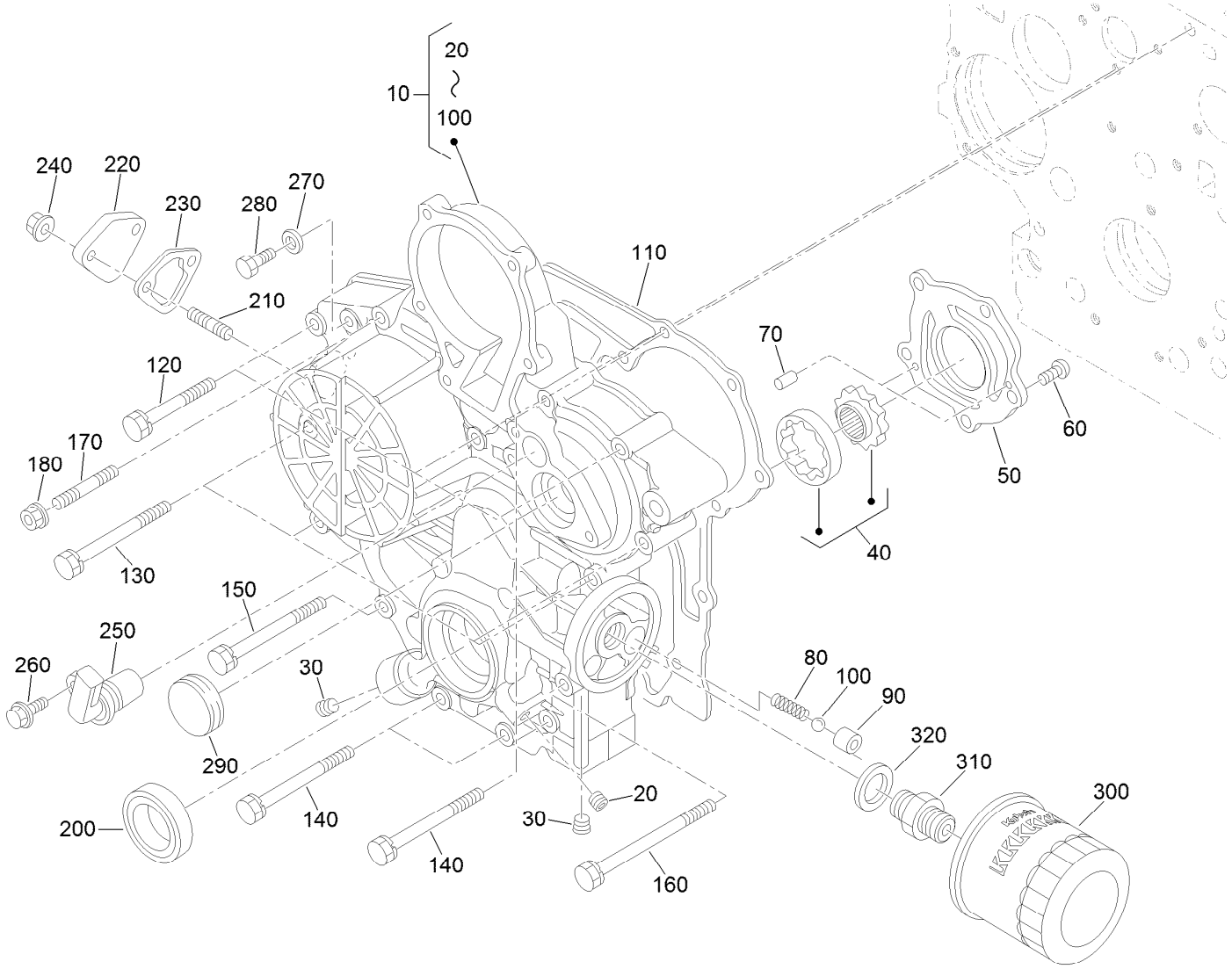

Gear Case and Oil Filter Cartridge Assembly

Ref.	Part Number	Qty.	Description
10	127-0453	1	Gear Case ASM
20	98-7487	1	Plug
30	127-0425	2	Plug
40	98-9540	1	Oil Pump Rotor ASM
50	107-9069	1	Cover-Pump, Oil
60	107-9071	5	Screw
70	107-9072	2	Pin-Straight
80	98-9544	1	Spring
90	98-9543	1	Seat-Valve
100	98-9380	1	Ball
110	98-9633	1	Gasket-Case, Gear
120	100-1765	3	Bolt
130	105-3797	4	Bolt
140	98-9356	4	Bolt
150	107-9074	1	Bolt
160	98-9586	1	Bolt

Ref.	Part Number	Qty.	Description
170	105-3709	1	Stud
180	100-2203	1	Nut-Flange
200	119-8038	1	Seal-Oil
210	105-3710	2	Stud
220	99-3514	1	Cover
230	117-7562	1	Gasket-Pump, Fuel
240	100-2203	2	Nut-Flange
250	127-0504	1	Sensor-Revolution
260	99-8363	1	Bolt-Flange
270	98-7654	1	Gasket
280	127-0400	1	Bolt-Hex
290	99-3515	1	Plug-Gearcase
300	108-3841	1	Filter-Oil
310	98-9388	1	Joint-Pipe
320	98-7562	1	Washer-Plain

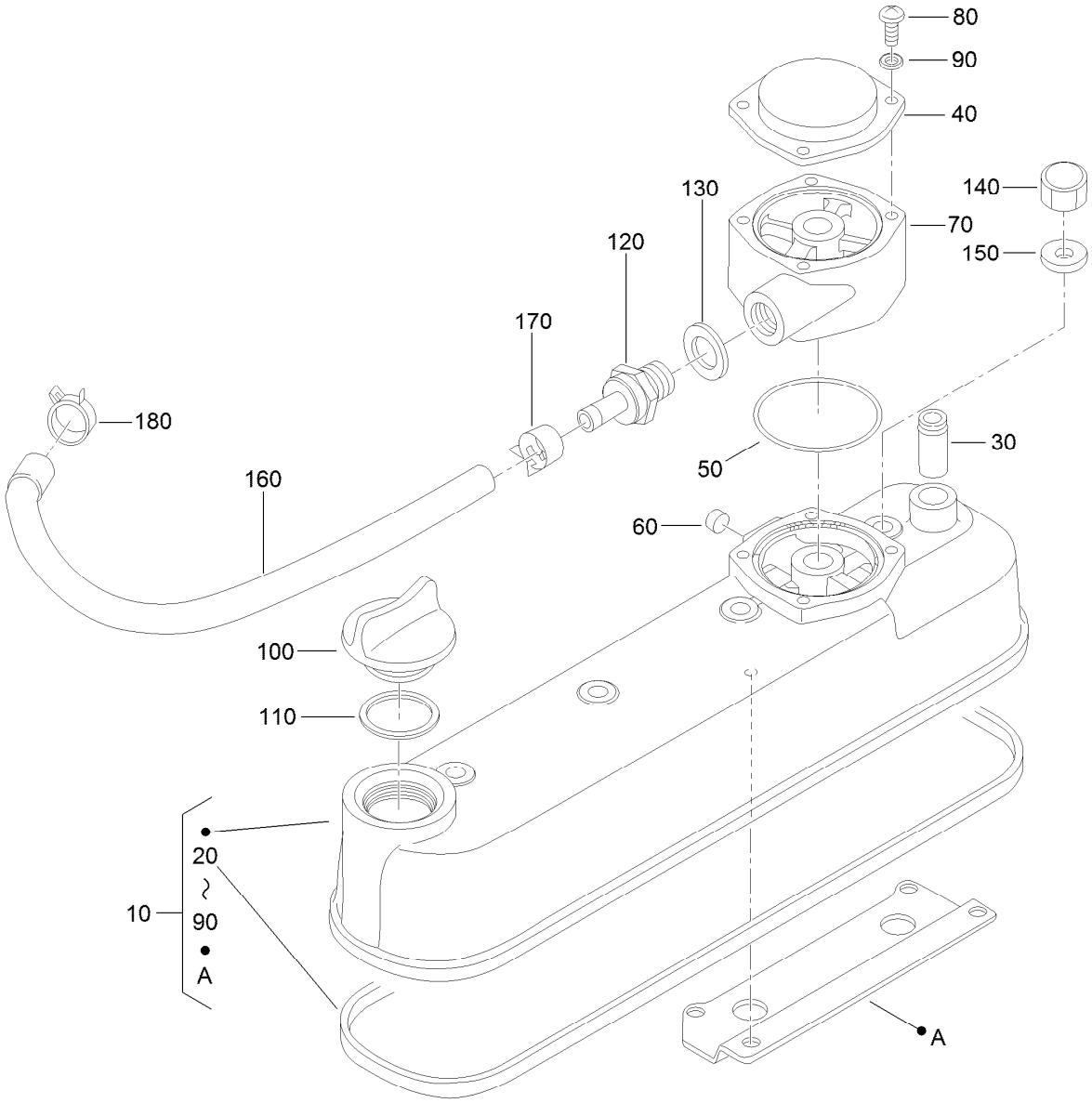

Cylinder Head Cover Assembly

Ref.	Part Number	Qty.	Description
10	127-0479	1	Cylinder Head Cover ASM
20	105-3712	1	Gasket-Cover, Head
30	98-7766	1	Pipe-Return, Water
40	108-7060	1	Cover-Breather
50	110-3846	2	O Ring-Breather
60	115-3042	1	Cap-Sealing
70	127-0480	1	Spacer-Breather
80	115-3044	4	Screw-Pan Head
90	127-0408	4	Washer-Lock, Spring

Ref.	Part Number	Qty.	Description
100	107-9075	1	Plug-Filler, Oil
110	99-3446	1	O-Ring
120	127-0468	1	Valve-Pcv
130	98-7528	1	O Ring-Copper
140	98-9455	4	Nut-Cap
150	98-9454	4	Gasket
160	127-0469	1	Tube-Breather
170	127-0491	1	Clamp-Hose
180	98-9579	1	Band-Pipe

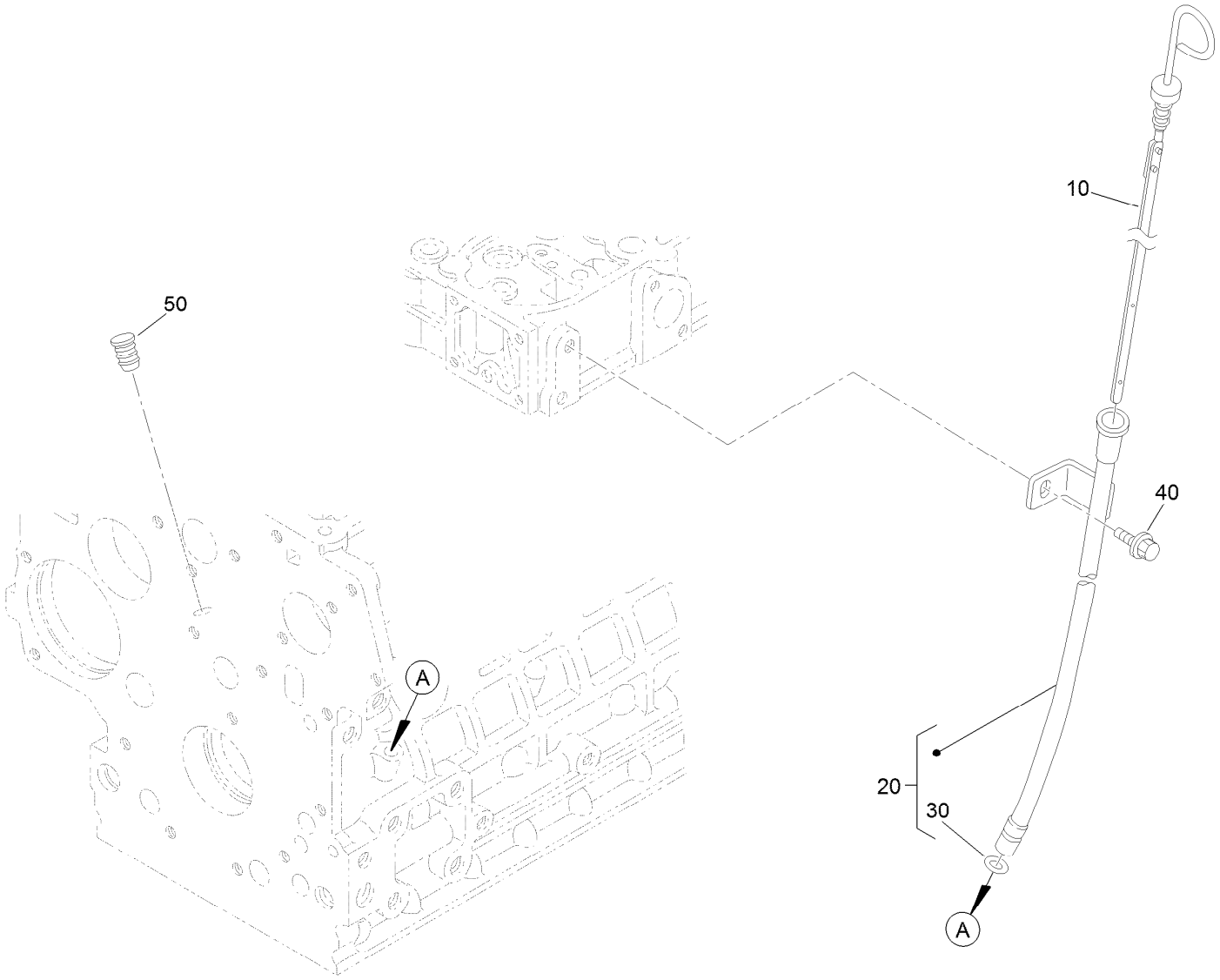

Oil Dipstick and Guide Assembly

Ref.	*Part Number*	*Qty.*	*Description*
10	98-9670	1	Gauge-Oil
20	98-9672	1	Oil Gauge Guide ASM
30	98-9722	1	O-Ring
40	115-8504	1	Bolt-Flange
50	110-3720	1	Plug-Gauge, Oil

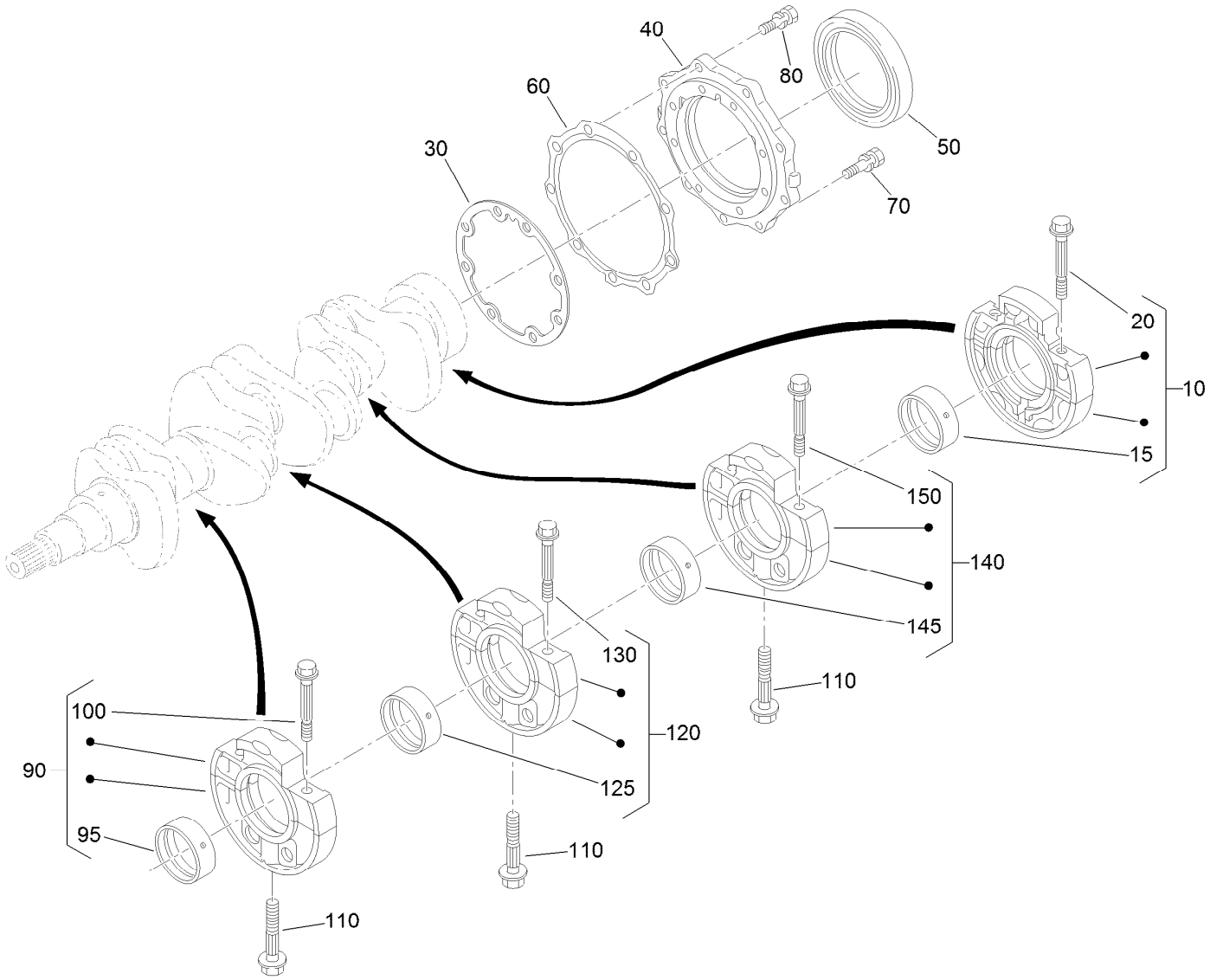

Main Bearing Case Assembly

Ref.	Part Number	Qty.	Description
10	112-7026	1	Wheel Bearing Case ASM
15	98-9525	1	Metal-Crankshaft (STD Set)
20	98-9484	2	Bolt-Case, Bearing
30	127-0440	1	Gasket-Case, Bearing
40	112-7046	1	Cover-Case, Bearing
50	112-0180	1	Seal-Oil
60	112-7037	1	Gasket-Cover, Case
70	127-0441	8	Bolt
80	127-0442	9	Bolt
90	127-0427	1	Main Bearing Case ASM

Ref.	Part Number	Qty.	Description
95	98-9524	2	Metal-Crankshaft (STD Set)
100	98-9484	2	Bolt-Case, Bearing
110	98-9485	3	Bolt-Case, Bearing
120	127-0428	1	Main Bearing Case ASM
125	98-9524	1	Metal-Crankshaft (STD Set)
130	98-9484	2	Bolt-Case, Bearing
140	127-0429	1	Bearing Case ASM
145	98-9524	1	Metal-Crankshaft (STD Set)
150	98-9484	2	Bolt-Case, Bearing

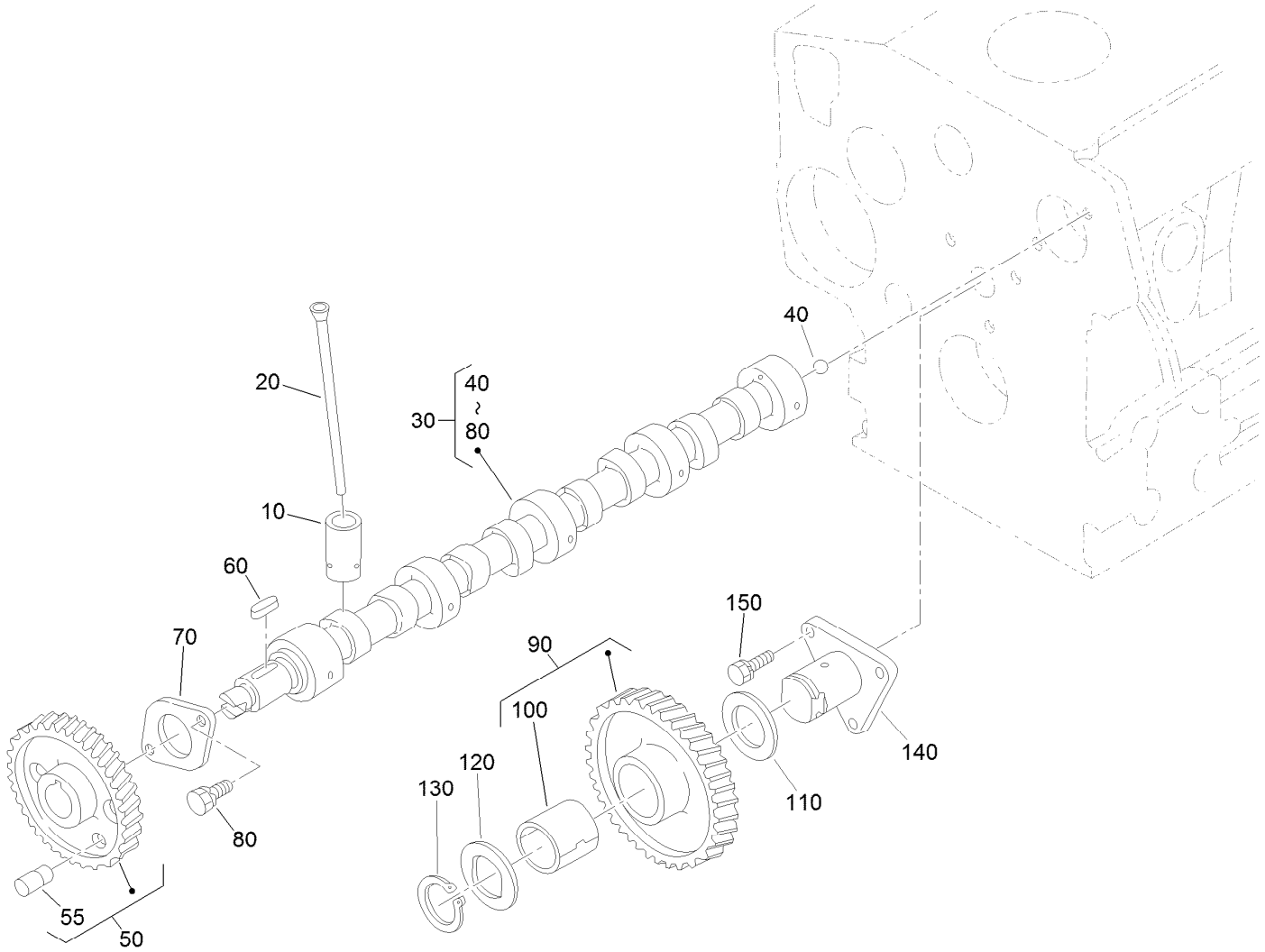

Cam Shaft and Idle Gear Assembly

Ref.	Part Number	Qty.	Description
10	112-0185	8	Tappet
20	127-0421	8	Rod-Push
30	127-0481	1	Camshaft ASM
40	110-3729	1	Ball
50	127-0482	1	Cam Gear ASM
55	127-0483	1	Pin-Gear, Cam
60	98-9378	1	Key-Feather
70	98-9510	1	Stopper-Camshaft

Ref.	Part Number	Qty.	Description
80	98-7692	2	Bolt
90	117-7584	1	Idler Gear ASM
100	117-7585	1	Bushing-Gear, Idle
110	98-9535	1	Collar-Gear, Idle
120	98-9536	1	Collar-Gear, Idle
130	98-9534	1	Circlip-Gear, Idle
140	98-9533	1	Shaft-Gear, Idle
150	98-7692	3	Bolt

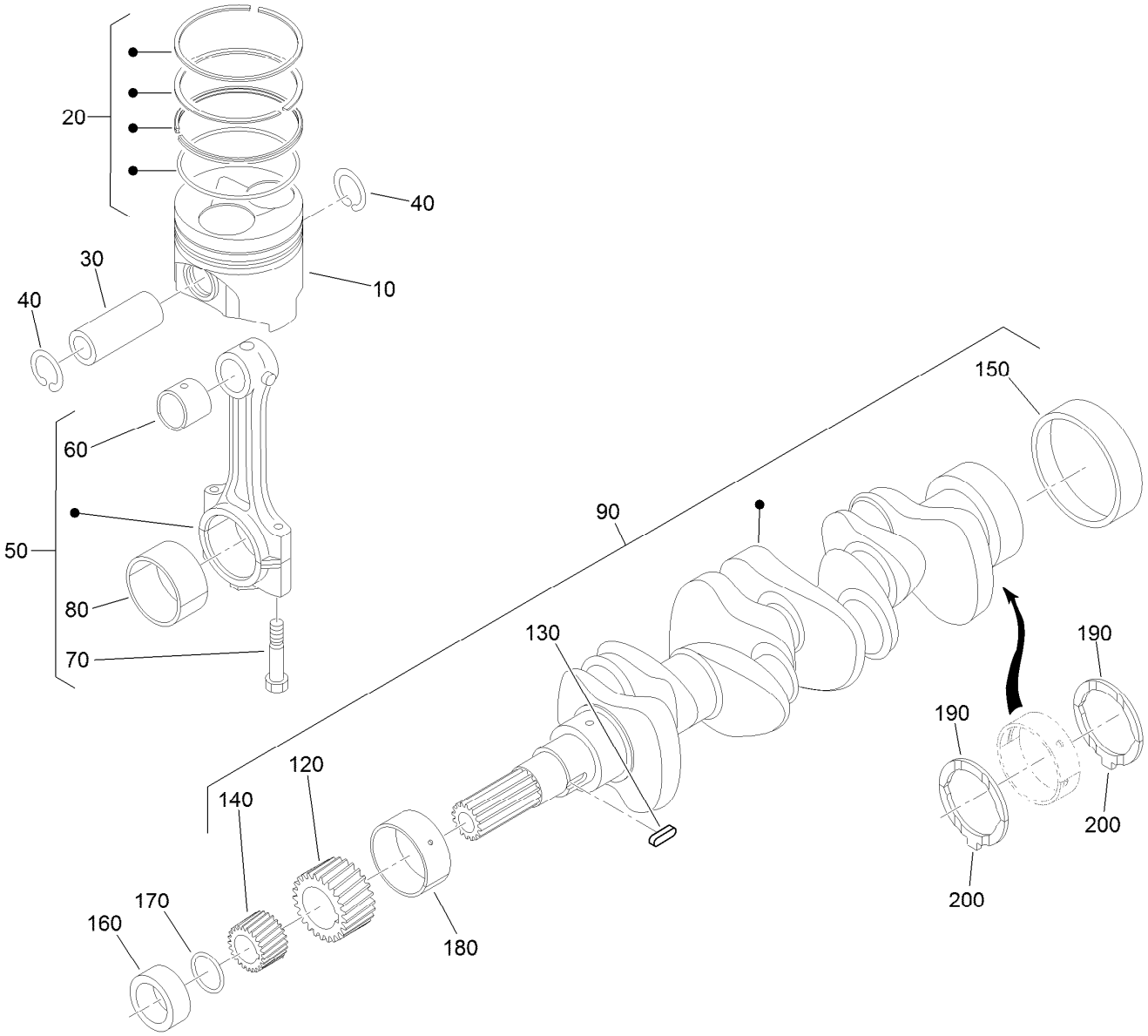

Piston and Crankshaft Assembly

Ref.	Part Number	Qty.	Description
10	127-0487	4	Piston (STD)
10	127-0488	4	Piston (+0.50Mm)
20	127-0485	4	Piston Ring ASM (STD)
20	127-0486	4	Piston Ring ASM (+0.50Mm)
30	98-9513	4	Pin-Piston
40	98-9514	8	Circlip-Pin, Piston
50	117-7586	4	Connecting Rod ASM
60	115-3014	4	Bushing-Pin, Piston
70	98-9517	8	Bolt-Rod, Connecting
80	98-9553	4	Bearing-Rod (STD)
80	98-9519	4	Bearing-Rod (-0.2Mm)
80	117-7588	4	Metal-Crankpin (-0.4Mm)
90	127-0433	1	Metal-Crankshaft (-0.2Mm)
120	117-7561	1	Gear-Crankshaft

Ref.	Part Number	Qty.	Description
130	98-9666	1	Key
140	127-0445	1	Gear-Drive, Oil Pump
150	98-9522	1	Sleeve-Crankshaft
160	127-0444	1	Collar-Crankshaft
170	105-3783	1	O-Ring
180	98-9524	3	Metal-Crankshaft (STD Set)
180	127-0433	3	Metal-Crankshaft (-0.2Mm)
180	127-0432	1	Metal-Crankshaft (-0.4Mm)
190	98-9413	2	Bearing-Thrust (STD)
190	127-0416	2	Metal-Side (+0.2Mm)
190	127-0417	2	Metal-Side (+0.40Mm)
200	98-9688	2	Bearing-Thrust (STD)
200	127-0437	2	Metal-Side (+0.2Mm)
200	127-0438	2	Metal-Side (+0.40Mm)

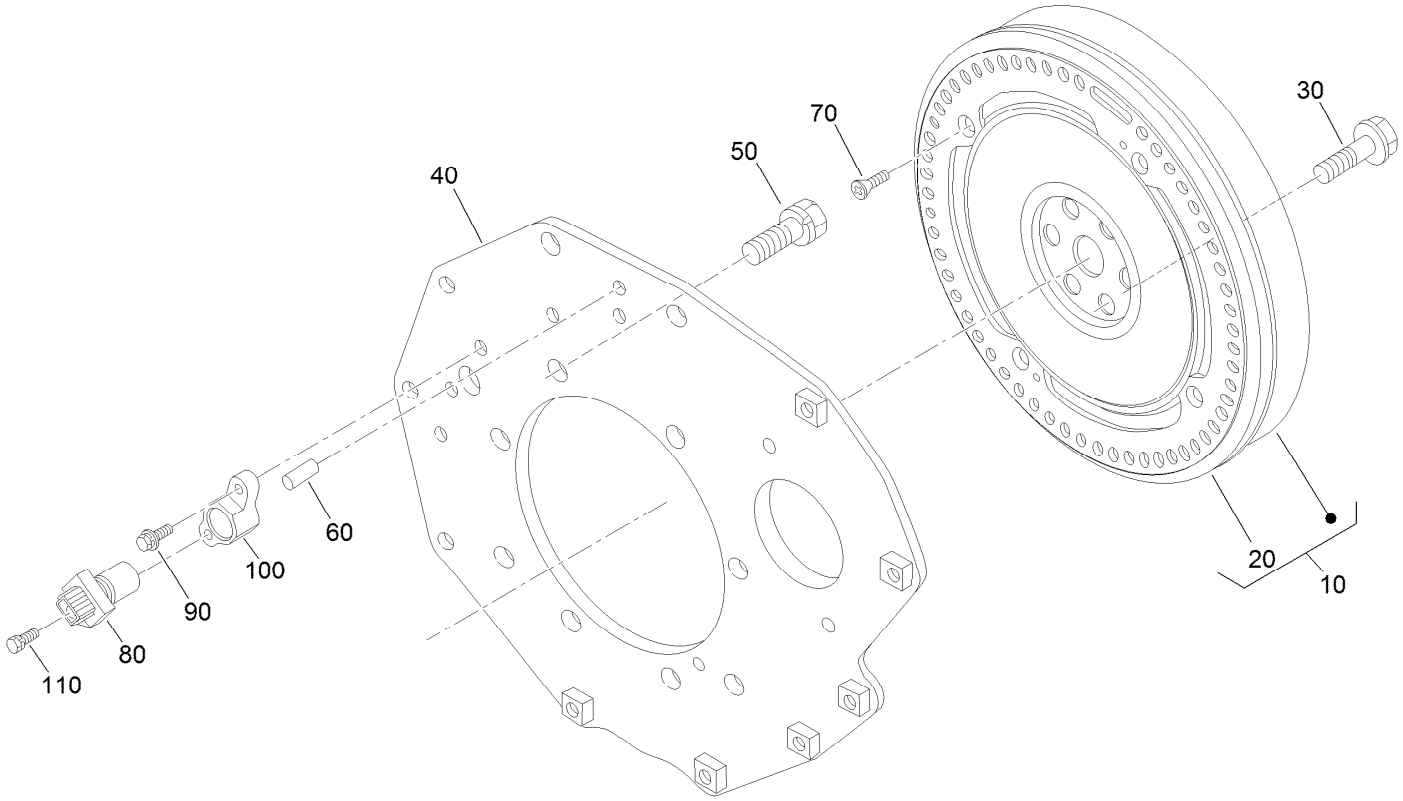

Flywheel and Sensor Switch Assembly

Ref.	*Part Number*	*Qty.*	*Description*
10	127-0489	1	Flywheel ASM
20	115-3015	1	Gear-Ring
30	98-9537	6	Bolt-Flywheel
40	127-0454	1	Plate-End, Rear
50	98-9392	8	Bolt
60	127-0412	2	Pin-Straight
70	127-0407	4	Screw-Head, Flat
80	125-9103	1	Sensor Stick ASM
90	127-0403	1	Bolt-Flange
100	127-0494	1	Holder-Sensor
110	127-0404	1	Bolt-Flange

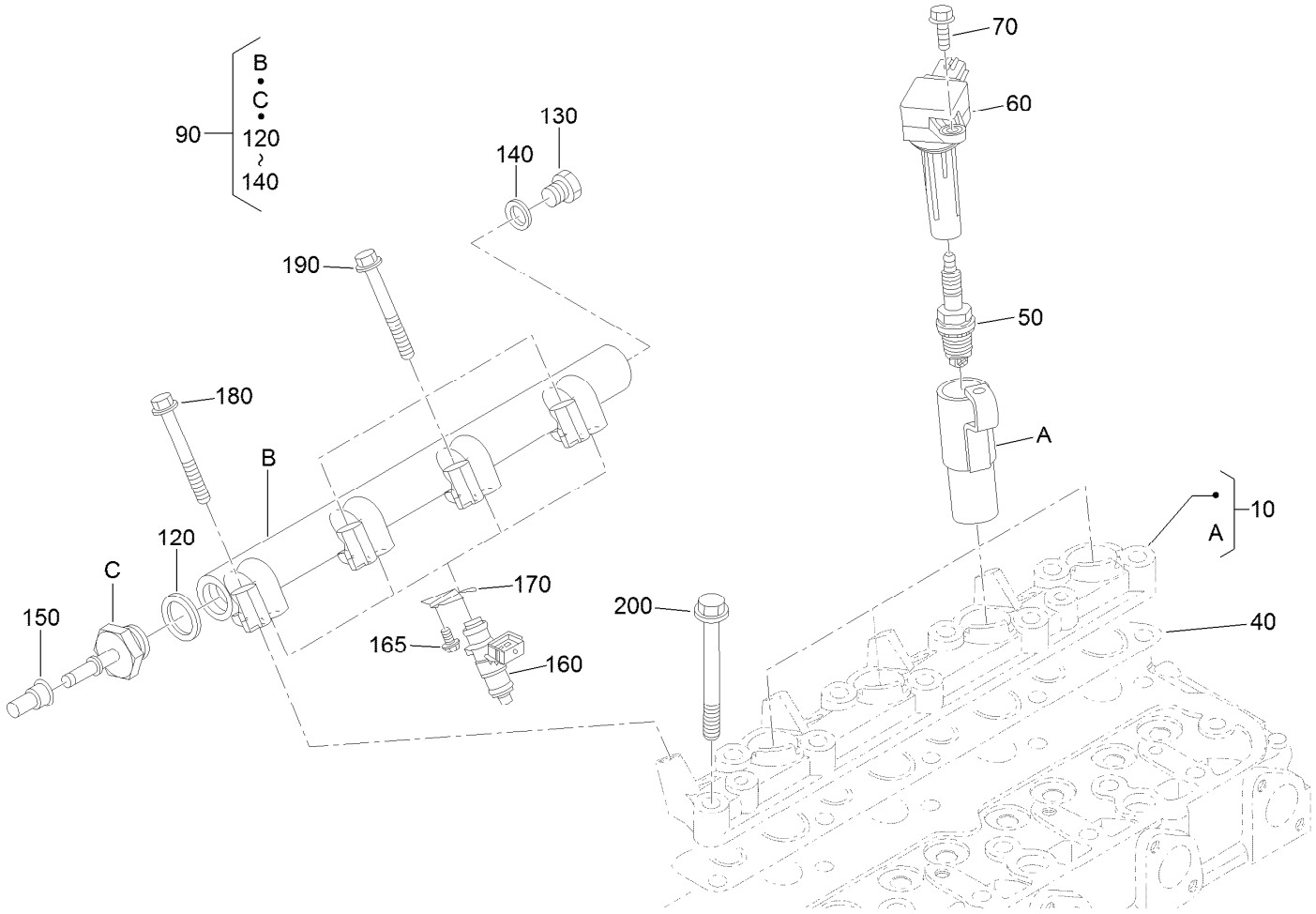

Ignition Coil and Delivery Pipe Assembly

Ref.	Part Number	Qty.	Description
10	127-0459	1	Flange-Injector
40	127-0460	1	Gasket-Flange
50	127-0499	4	Spark Plug
60	127-0498	4	Coil-Ignition
70	99-8363	4	Bolt-Flange
90	127-0509	1	Delivery Pipe ASM
120	127-0411	1	Packing
130	127-0413	1	Plug

Ref.	Part Number	Qty.	Description
140	125-9096	1	Gasket
150	127-0456	1	Cap-Fuel
160	125-9107	4	Injector
165	100-1774	4	Bolt-Flange
170	127-0458	4	Stopper-Injector
180	127-0404	1	Bolt-Flange
190	127-0405	3	Bolt-Flange
200	127-0466	9	Bolt-Head, Cylinder

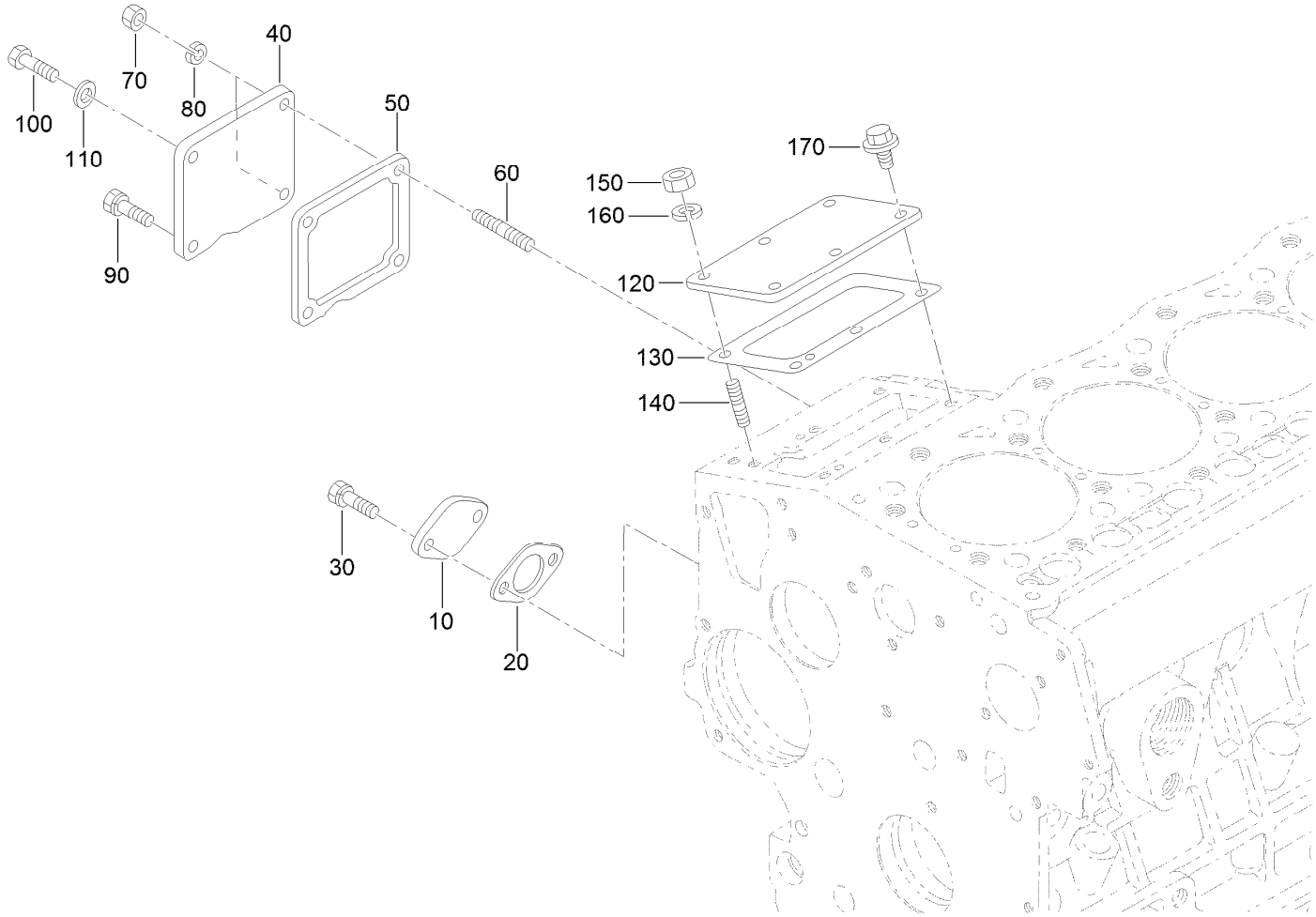

Engine Covers Assembly

Ref.	Part Number	Qty.	Description
10	115-4122	1	Cover-Shaft, Fork Lever
20	98-9682	1	Gasket
30	98-9350	2	Bolt
40	127-0418	1	Cover
50	98-9637	1	Gasket
60	105-3710	2	Stud
70	98-7572	2	Nut
80	98-7699	2	Washer-Spring
90	98-9350	1	Bolt

Ref.	Part Number	Qty.	Description
100	127-0401	1	Bolt-Hex
110	98-7654	1	Gasket
120	127-0465	1	Cover-Pump, Injection
130	105-3728	1	Shim-Pump, Injection (.20Mm)
140	98-9438	3	Stud
150	100-1776	3	Nut
160	98-7699	3	Washer-Spring
170	100-1774	3	Bolt-Flange

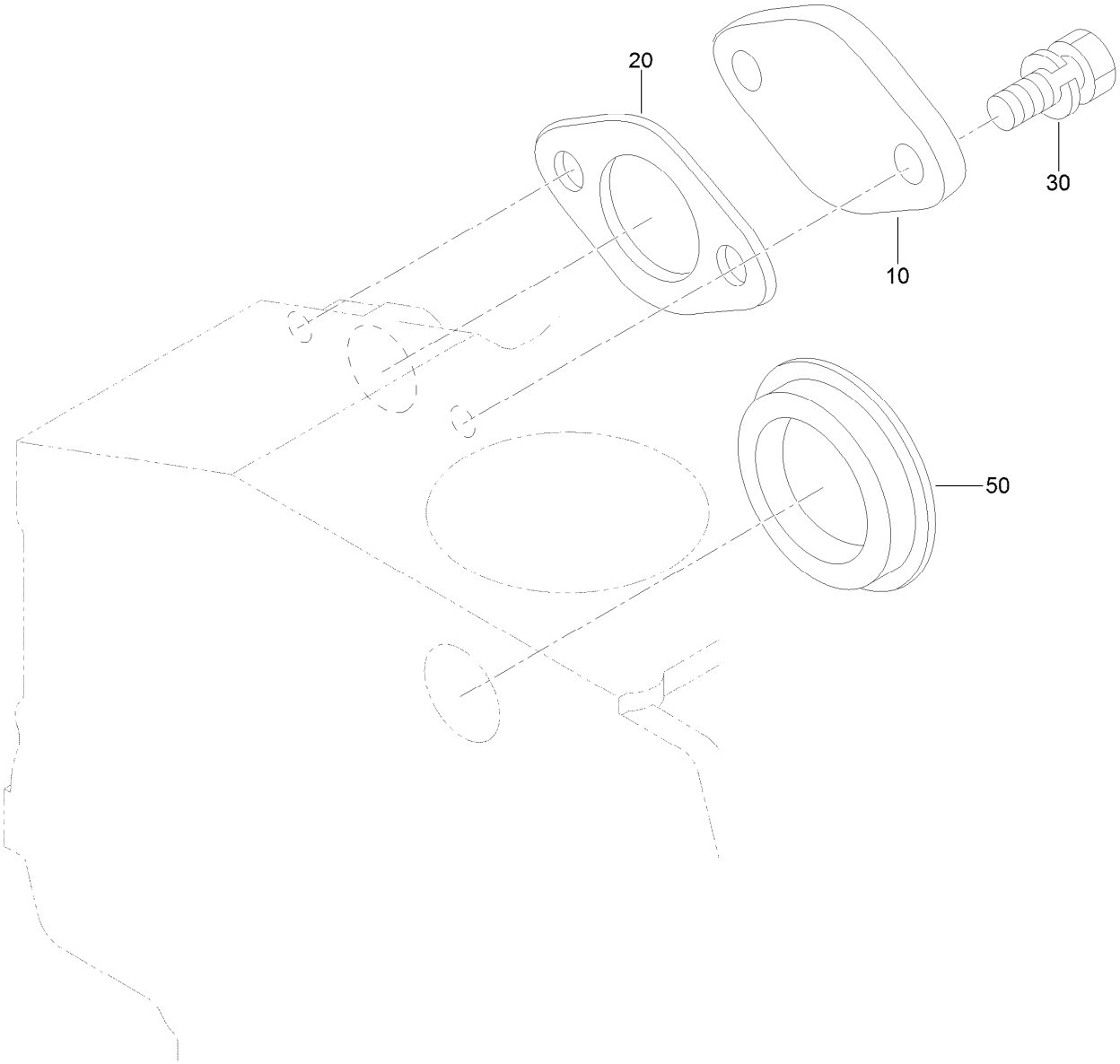

Solenoid Cover and Hydraulic Pump Cover

Ref.	*Part Number*	*Qty.*	*Description*
10	127-0419	1	Cover-Solenoid
20	98-9683	1	Gasket-Cover, Solenoid
30	98-7692	2	Bolt
50	112-7016	1	Cover-Pump

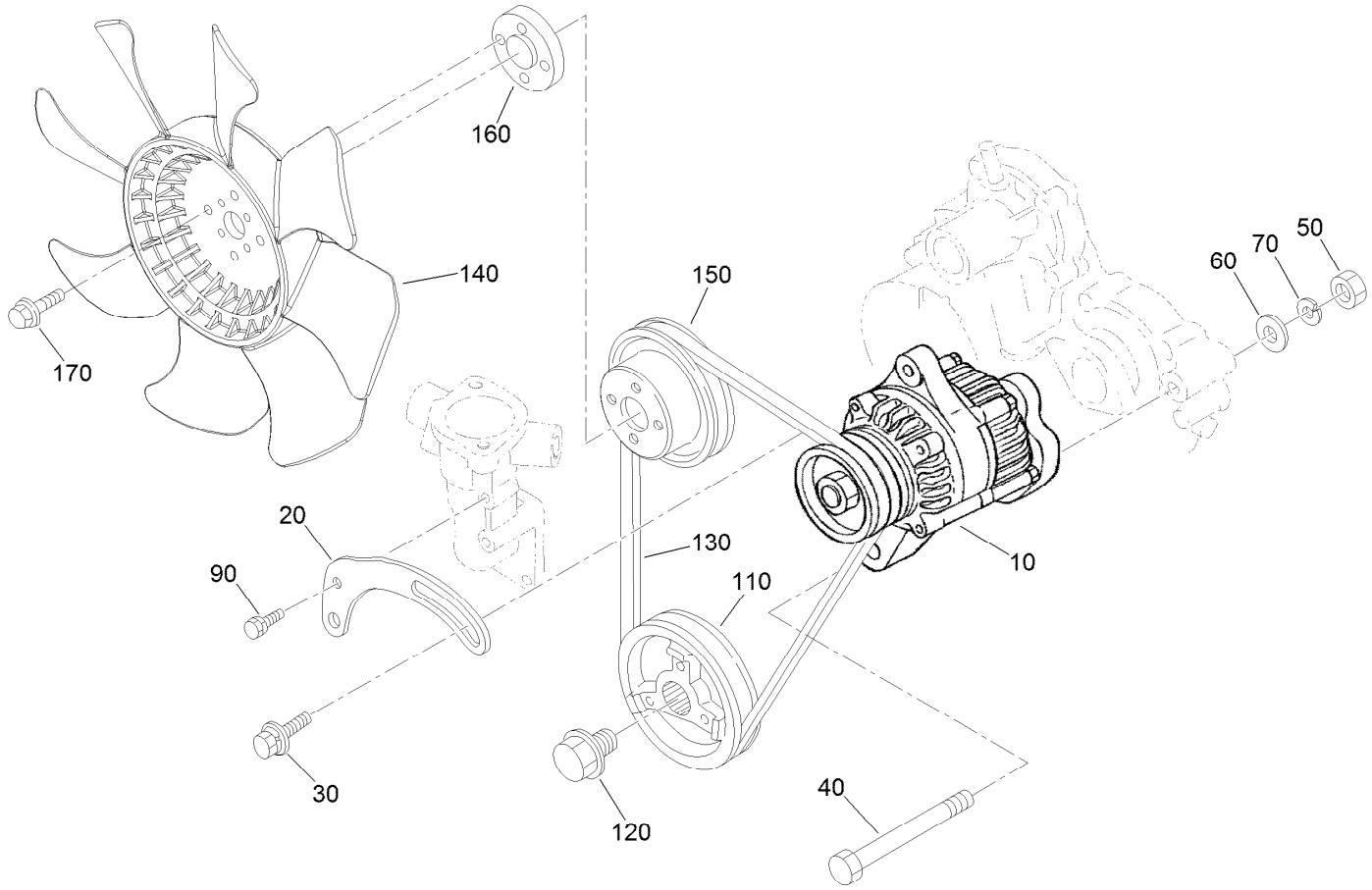

Alternator, Pulley and Fan Assembly

Ref.	Part Number	Qty.	Description
10	131-9567	1	60 Amp Alternator ASM
20	117-5542	1	Bracket
30	108-7088	1	Bolt
40	98-9360	1	Bolt
50	98-7737	1	Nut
60	98-9366	1	Washer-Plain
70	98-7738	1	Washer-Spring
90	98-7692	1	Bolt
110	105-3745	1	Pulley-Drive, Fan
120	98-9585	1	Bolt
130	104-3494	1	Belt-V
140	131-5803	1	Fan
150	98-9584	1	Pulley-Fan
160	108-2872	1	Collar-Fan
170	114-8414	4	Screw-HHF

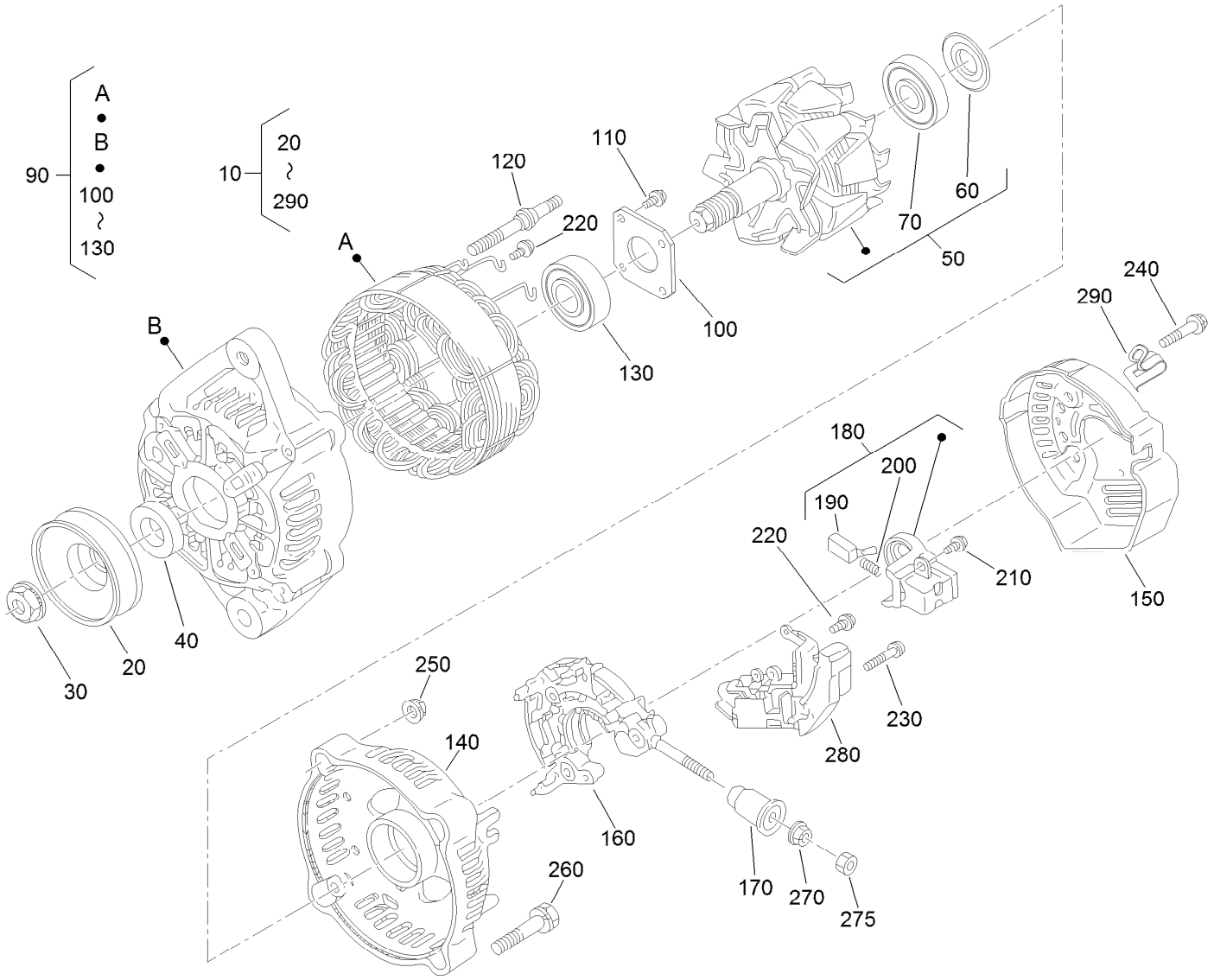

Alternator Components

Ref.	Part Number	Qty.	Description
10	131-9567	1	60 Amp Alternator ASM
20	98-9453	1	Pulley-Dynamo
30	98-7708	1	Nut
40	98-7709	1	Collar
50	107-0136	1	Rotor ASM
60	98-7711	1	Cover-Bearing
70	107-0138	1	Bearing-Ball
90	131-9573	1	Frame-End, Drive
100	98-7715	1	Plate-Retainer
110	98-7716	4	Screw-Head, Round
120	98-7717	2	Bolt-Through
130	133-2811	1	Bearing
140	121-3812	1	Frame-End
150	121-3813	1	Cover-End
160	121-3805	1	Rectifier ASM

Ref.	Part Number	Qty.	Description
170	117-0321	1	Insulation-Brush
180	107-0141	1	Brush Holder ASM
190	98-7724	2	Brush
200	98-7725	2	Spring-Brush
210	98-7726	2	Screw-Head, Round
220	98-7727	6	Screw-Head, Round
230	98-7728	1	Screw-Head, Round
240	98-7729	3	Bolt
250	98-7730	2	Nut
260	98-7731	2	Bolt
270	98-7732	1	Nut
275	100-1776	1	Nut
280	121-3809	1	Regulator ASM
290	120-5841	1	Clamp-Cord

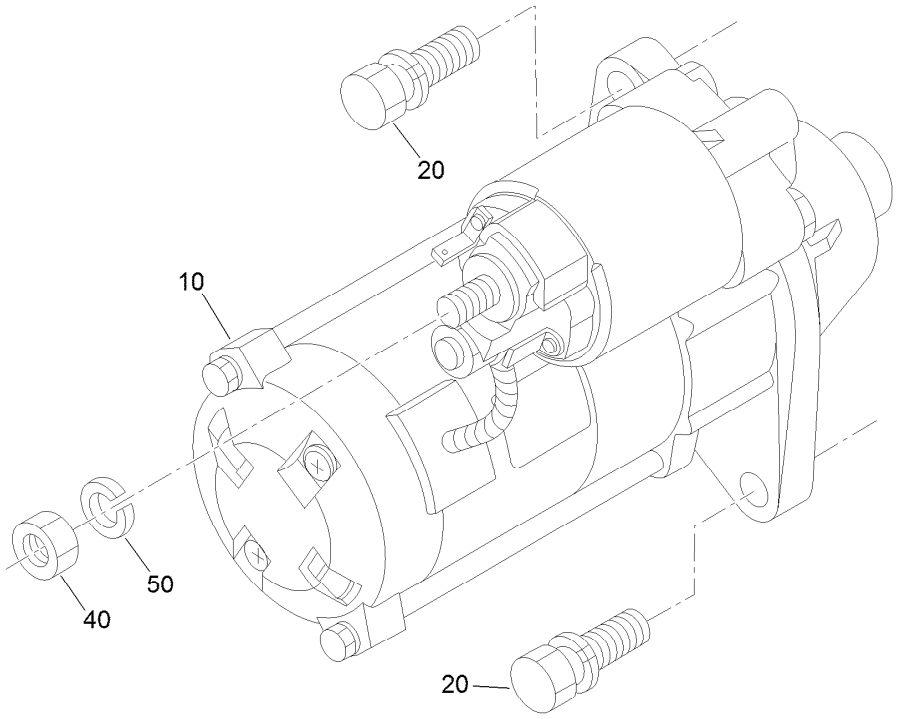

Starter Installation Assembly

Ref.	*Part Number*	*Qty.*	*Description*
10	127-0495	1	Starter ASM
20	98-7697	2	Bolt
40	98-7739	1	Nut
50	3253-4	1	Washer-Lock

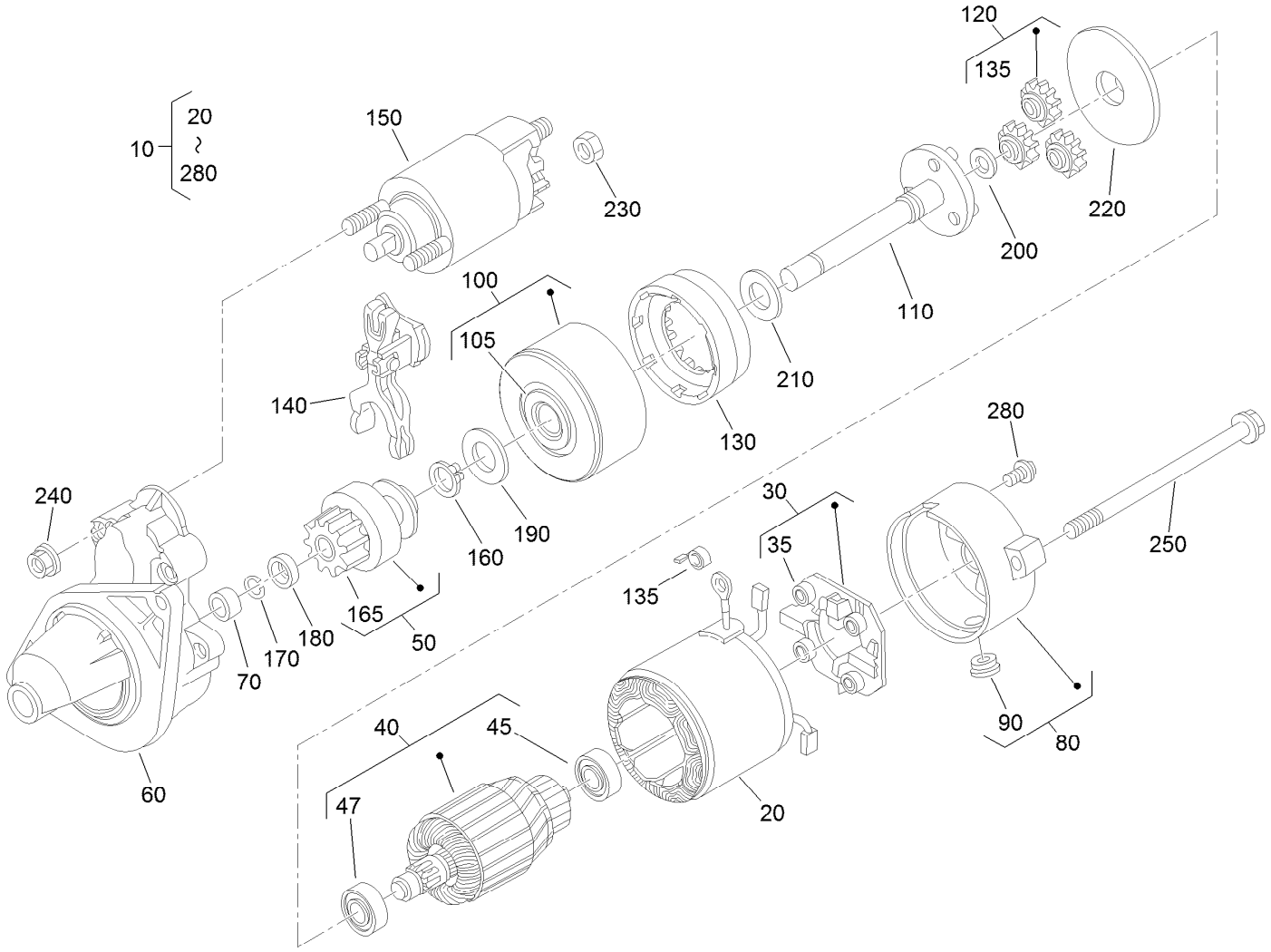

Starter Components Assembly

Ref.	Part Number	Qty.	Description
10	127-0495	1	Starter ASM
20	100-2181	1	Starter Yoke ASM
30	100-2222	1	Holder ASM
35	127-0415	4	Spring-Brush
40	100-2182	1	Armature ASM
45	98-9412	1	Bearing-Ball
47	98-9411	1	Bearing-Ball
50	100-2185	1	Starter Clutch ASM
60	127-0490	1	Starter Housing ASM
70	100-2183	1	Bearing
80	127-0449	1	Frame ASM
90	100-2213	1	Cover
100	100-2223	1	Bearing ASM
105	127-0414	1	Bearing
110	100-2187	1	Starter Shaft ASM
120	100-2220	3	Gear

Ref.	Part Number	Qty.	Description
130	100-2221	1	Gear
135	98-7750	4	Spring-Brush
140	100-2218	1	Lever
150	127-0448	1	Switch-Magnetic
160	100-2219	1	Ring-Snap
165	112-2833	1	Gear-Pinion
170	100-2212	1	Ring-Snap
180	100-2216	1	Collar
190	100-2224	1	Washer-Plain
200	100-2225	1	Washer-Plain
210	100-2226	1	Washer-Plain
220	100-2227	1	Plate
230	99-8371	1	Nut-Hex
240	100-1813	2	Nut
250	100-2210	2	Bolt-Through
280	100-2188	2	Screw

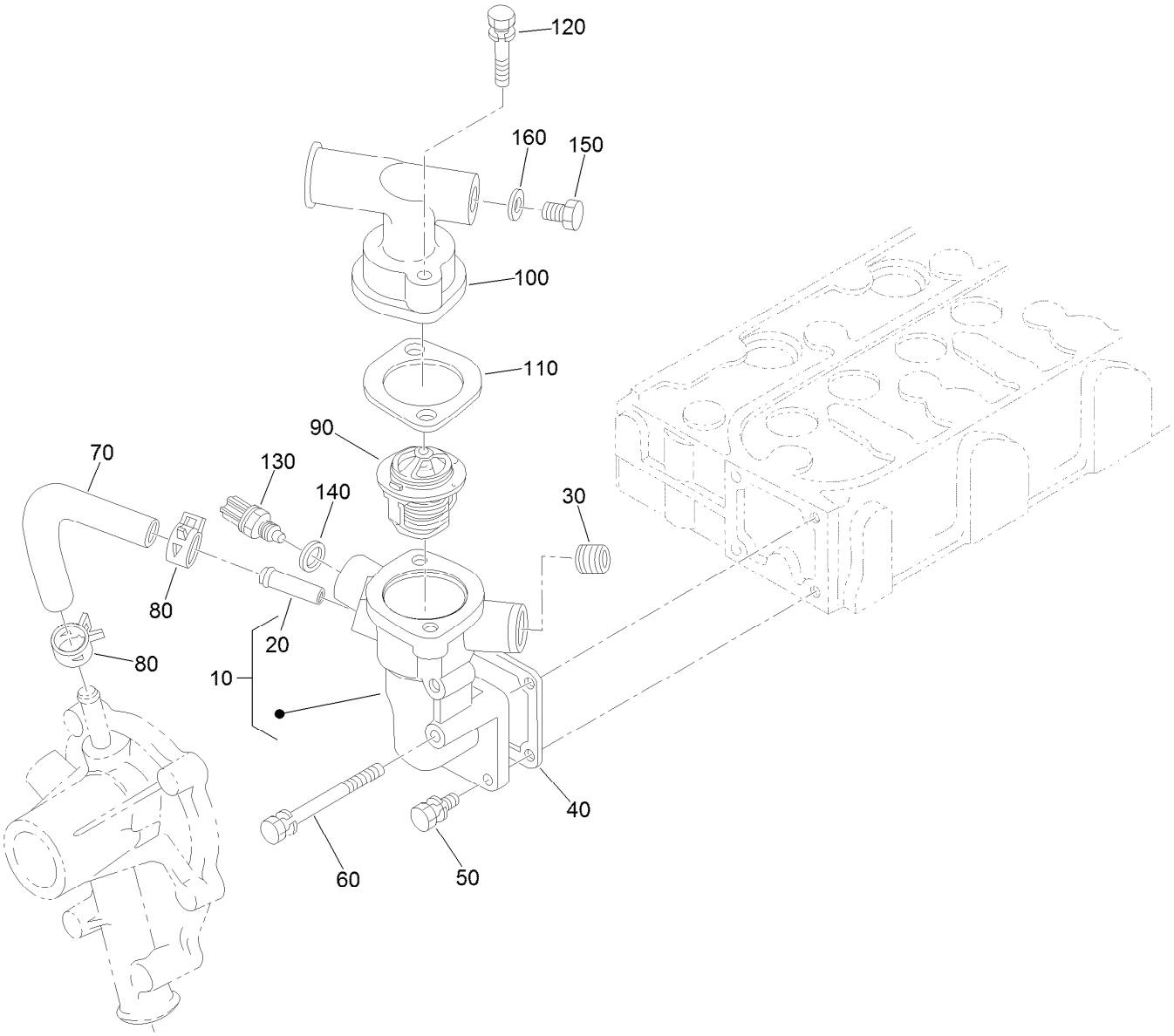

Water Flange and Thermostat Assembly

Ref.	Part Number	Qty.	Description
10	127-0435	1	Water Flange ASM
20	98-9580	1	Pipe-Return, Water
30	105-2874	1	Plug
40	98-9638	1	Gasket-Flange, Water
50	98-7692	3	Bolt
60	98-9356	1	Bolt
70	98-9578	1	Pipe-Return, Water
80	125-9078	2	Clamp-Hose

Ref.	Part Number	Qty.	Description
90	98-7778	1	Thermostat ASM
100	108-2869	1	Cover-Thermostat
110	105-3748	1	Gasket-Thermostat
120	98-7777	2	Bolt
130	125-9102	1	Sensor-Temperature, Water
140	127-0410	1	Washer-Seal
150	108-2870	1	Plug-Drain
160	100-9155	1	Gasket

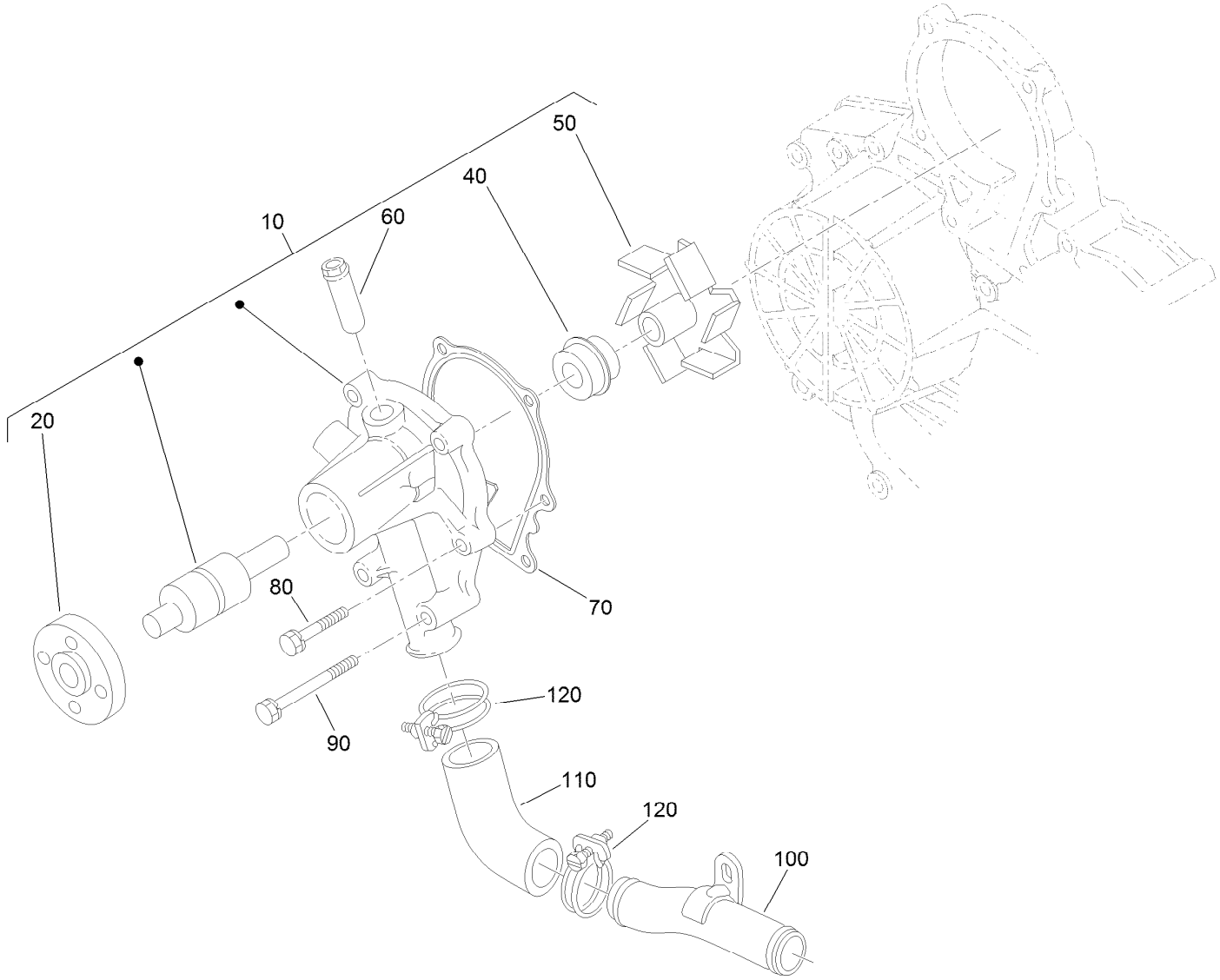

Water Pump Assembly

Ref.	Part Number	Qty.	Description
10	107-9089	1	Water Pump ASM
20	99-3516	1	Flange-Pump, Water
40	105-3750	1	Mechanical Seal ASM
50	112-7017	1	Impeller-Pump, Water
60	100-1932	1	Pipe-Return, Water
70	99-3454	1	Gasket-Pump, Water
80	98-9353	4	Bolt
90	107-9090	2	Bolt
100	98-9716	1	Pipe-Water
110	107-9091	1	Pipe-Water
120	127-0439	2	Clamp-Hose

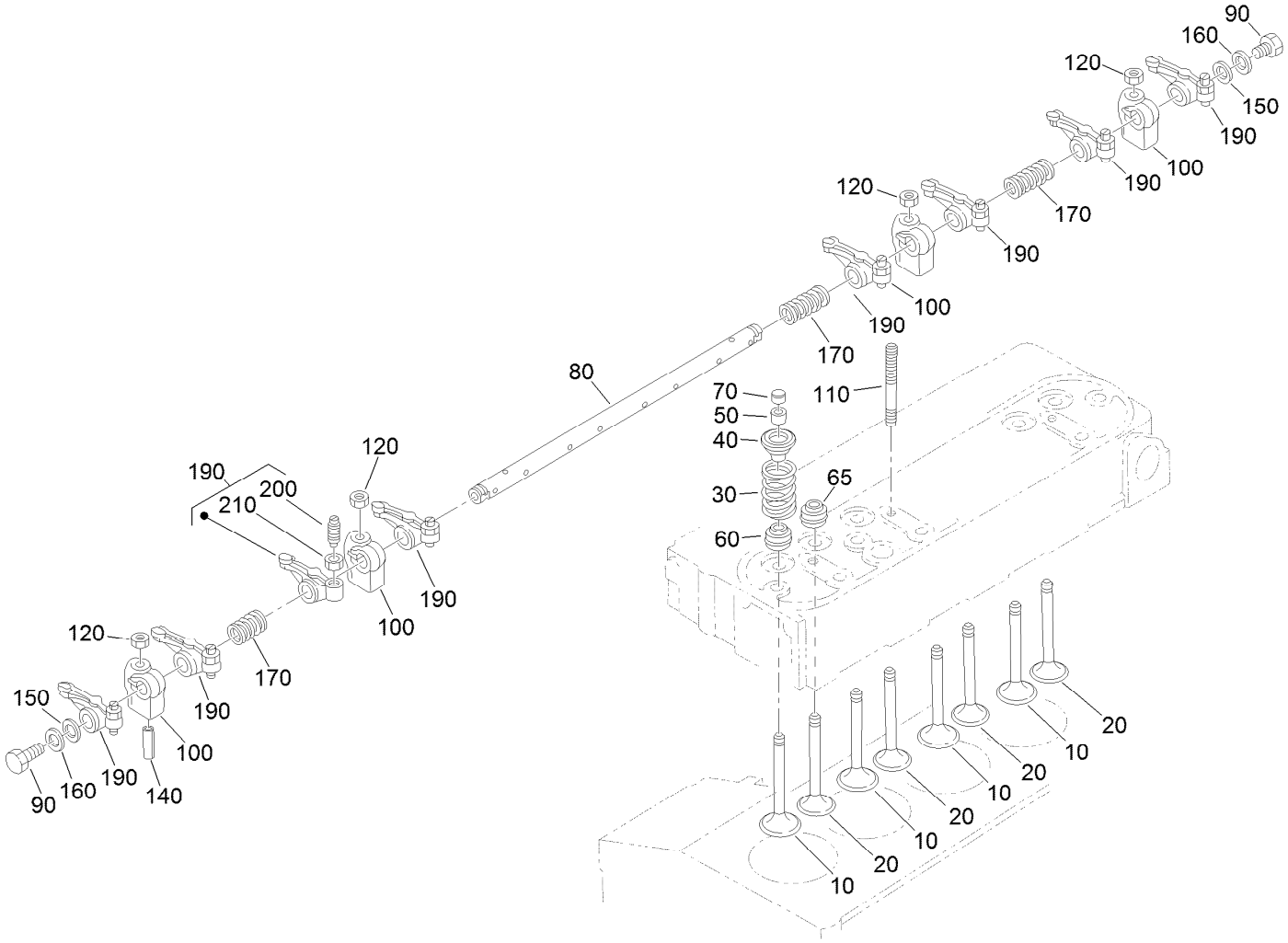

Valve and Rocker Arm Assembly

Ref.	Part Number	Qty.	Description
10	127-0475	4	Valve-Intake
20	127-0476	4	Valve-Exhaust
30	98-9626	8	Spring-Valve
40	107-9092	8	Retainer-Spring
50	117-7572	8	Collet-Spring, Valve
60	99-8385	4	Seal-Stem, Valve
65	127-0477	4	Seal-Stem, Valve
70	98-9497	8	Cap-Valve
80	127-0420	1	Shaft-Arm, Rocker
90	99-8363	2	Bolt-Flange

Ref.	Part Number	Qty.	Description
100	98-9505	4	Bracket-Arm, Rocker
110	98-9506	4	Stud
120	131-6563	4	Nut-Flange
140	105-3758	1	Pin-Spring
150	98-9507	2	Washer-Shaft, Rocker Arm
160	110-3832	2	Washer-Plain
170	98-9504	3	Spring-Arm, Rocker
190	112-7020	8	Rocker Arm ASM
200	98-9502	8	Screw-Adjusting
210	98-9503	8	Nut

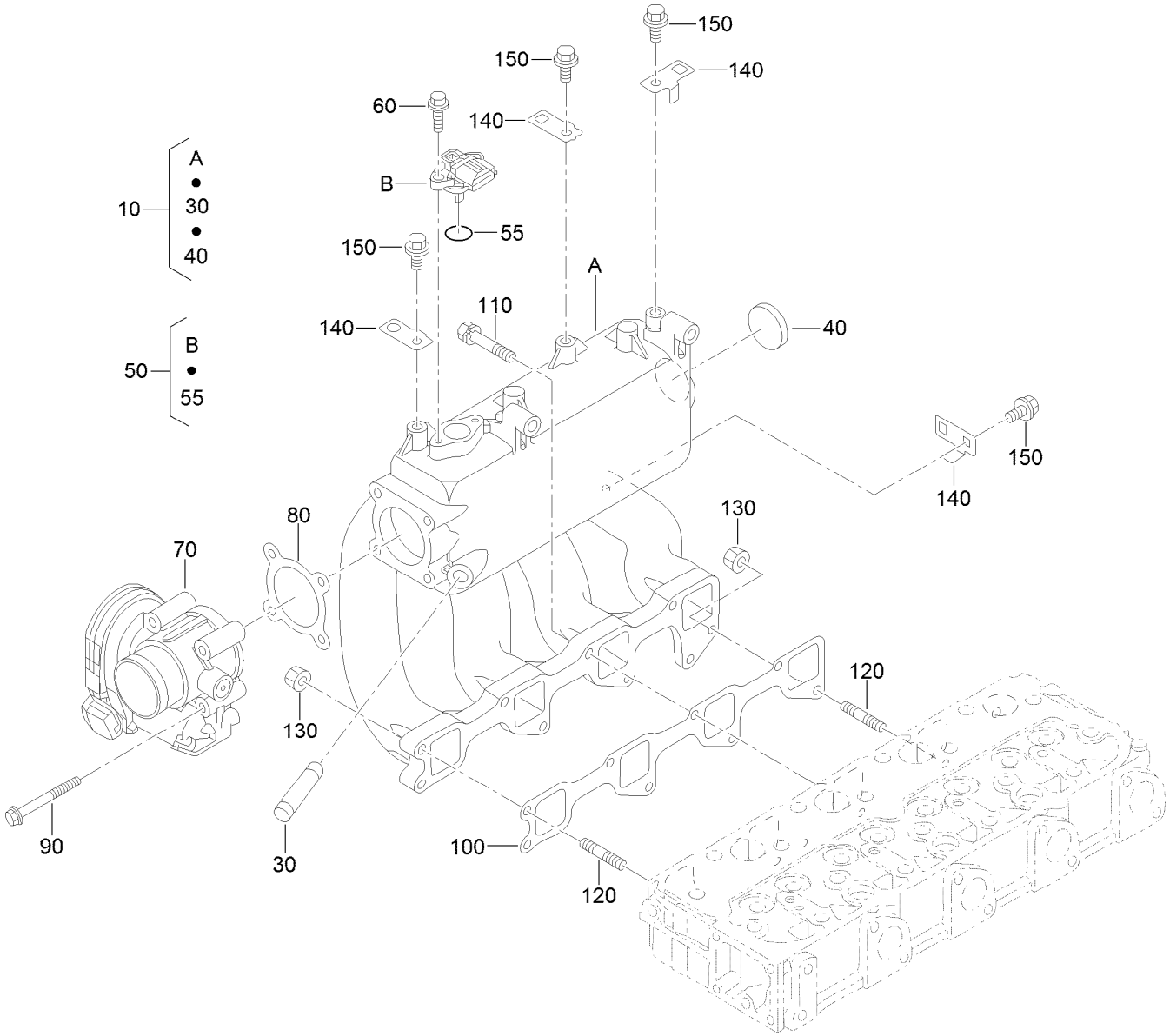

Inlet Manifold Assembly

Ref.	Part Number	Qty.	Description
10	127-0471	1	Manifold-Intake
30	127-0470	1	Joint-Tube, Breather
40	98-7539	1	Cap-Sealing
50	125-9110	1	Sensor (Tmap)
55	125-9112	1	O Ring
60	125-9111	2	Bolt-Flange
70	127-0492	1	Throttle Body ASM
80	127-0493	1	Gasket-Throttle
90	127-0405	1	Bolt-Flange
100	127-0472	1	Gasket-Intake
110	98-9352	6	Bolt
120	125-9092	2	Stud
130	100-2203	2	Nut-Flange
140	127-0496	4	Bracket-Harness
150	100-1774	4	Bolt-Flange

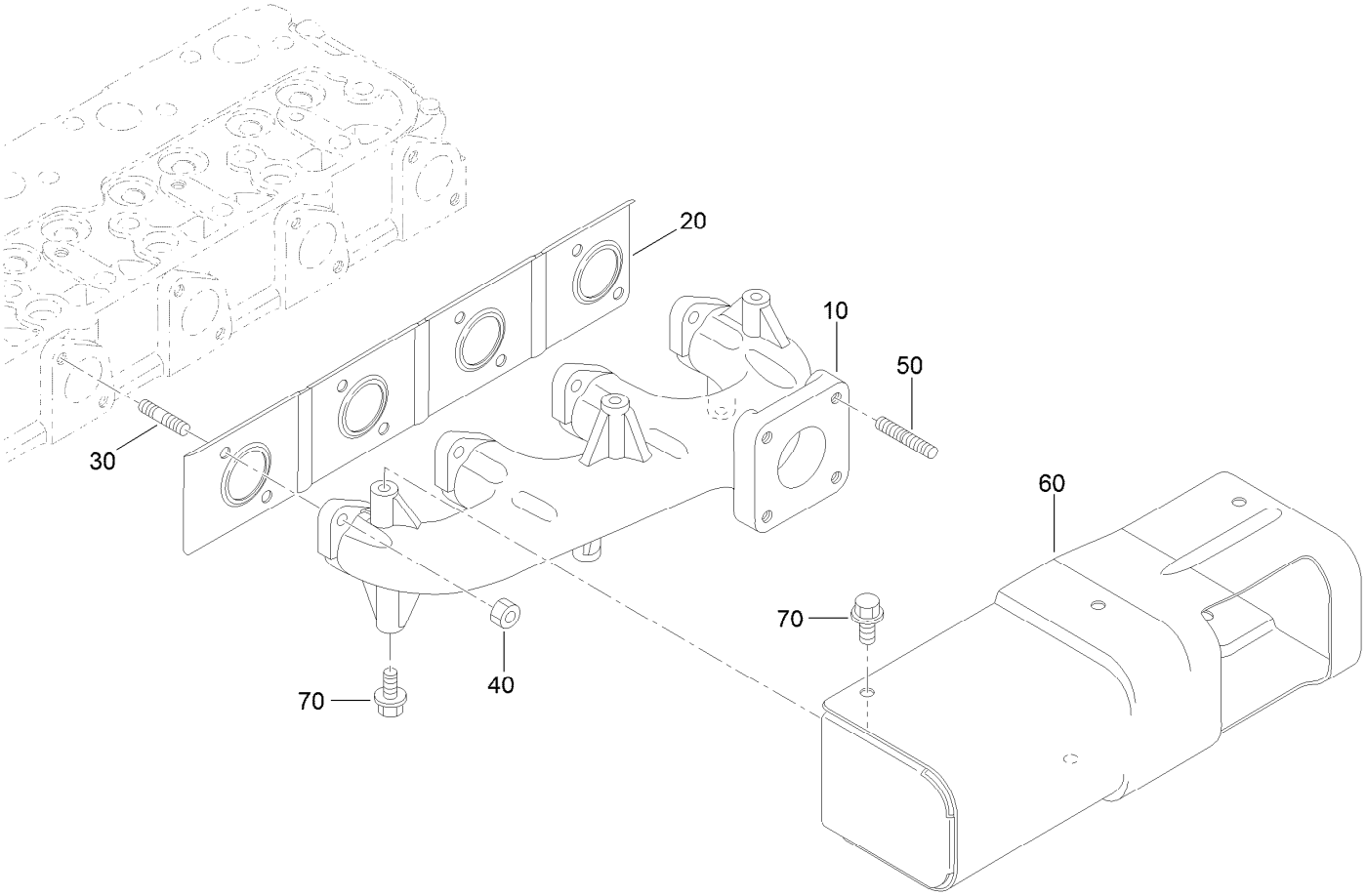

Exhaust Manifold Assembly

Ref.	*Part Number*	*Qty.*	*Description*
10	131-9592	1	Manifold-Exhaust
20	127-0474	1	Gasket-Manifold, Exhaust
30	127-0507	8	Stud
40	98-9665	8	Nut
50	127-0446	4	Stud
60	131-9593	1	Cover-Exhaust
70	99-8363	6	Bolt-Flange

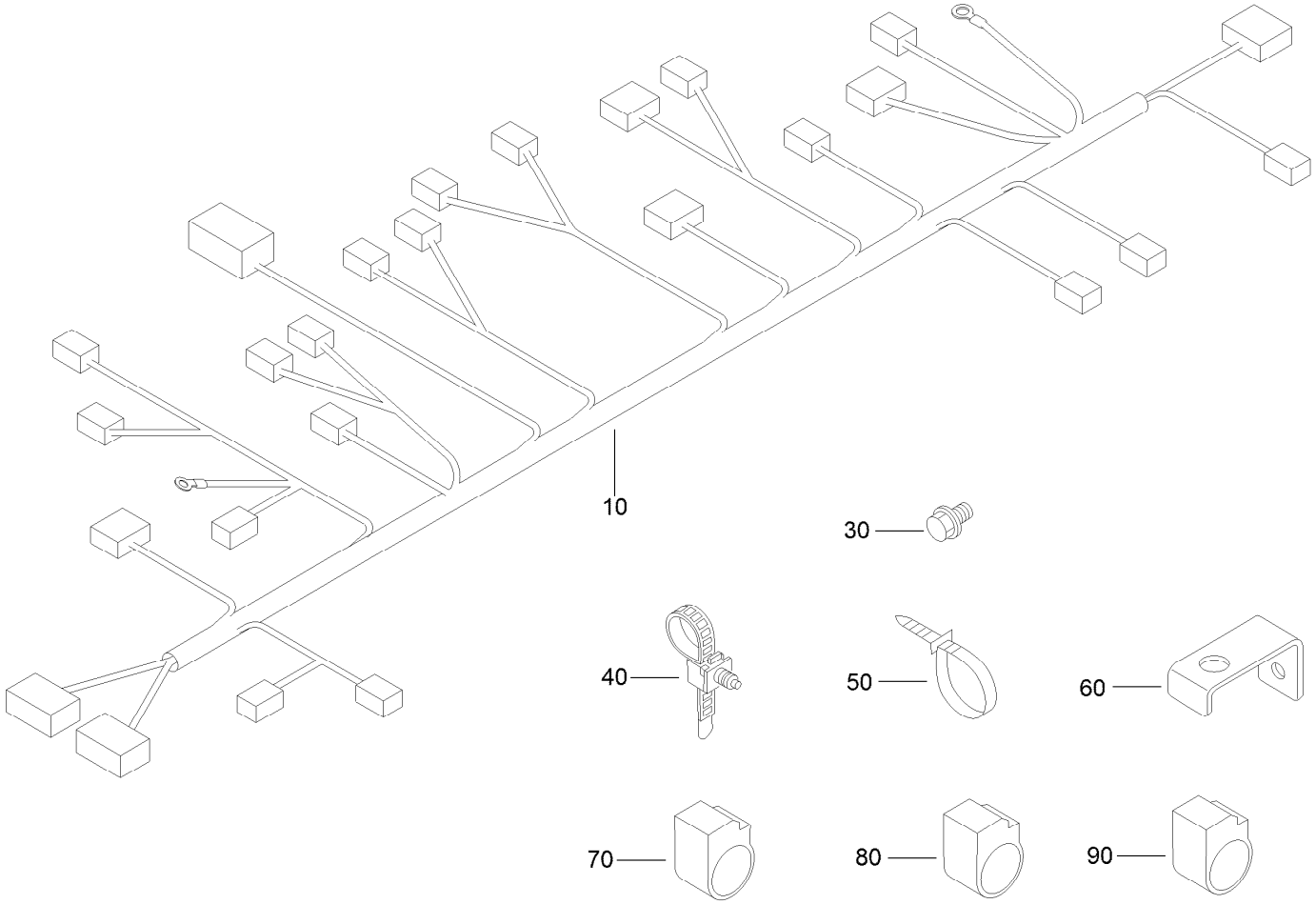

Wire Harness Assembly

Ref.	*Part Number*	*Qty.*	*Description*
10	127-0450	1	Wire Harness ASM
30	115-8504	1	Bolt-Flange
40	127-0515	1	Clamp
50	127-0447	4	Band-Cord
60	127-0497	1	Bracket-Harness
70	127-0514	1	Clamp
80	127-0513	2	Clamp
90	127-0512	1	Clamp

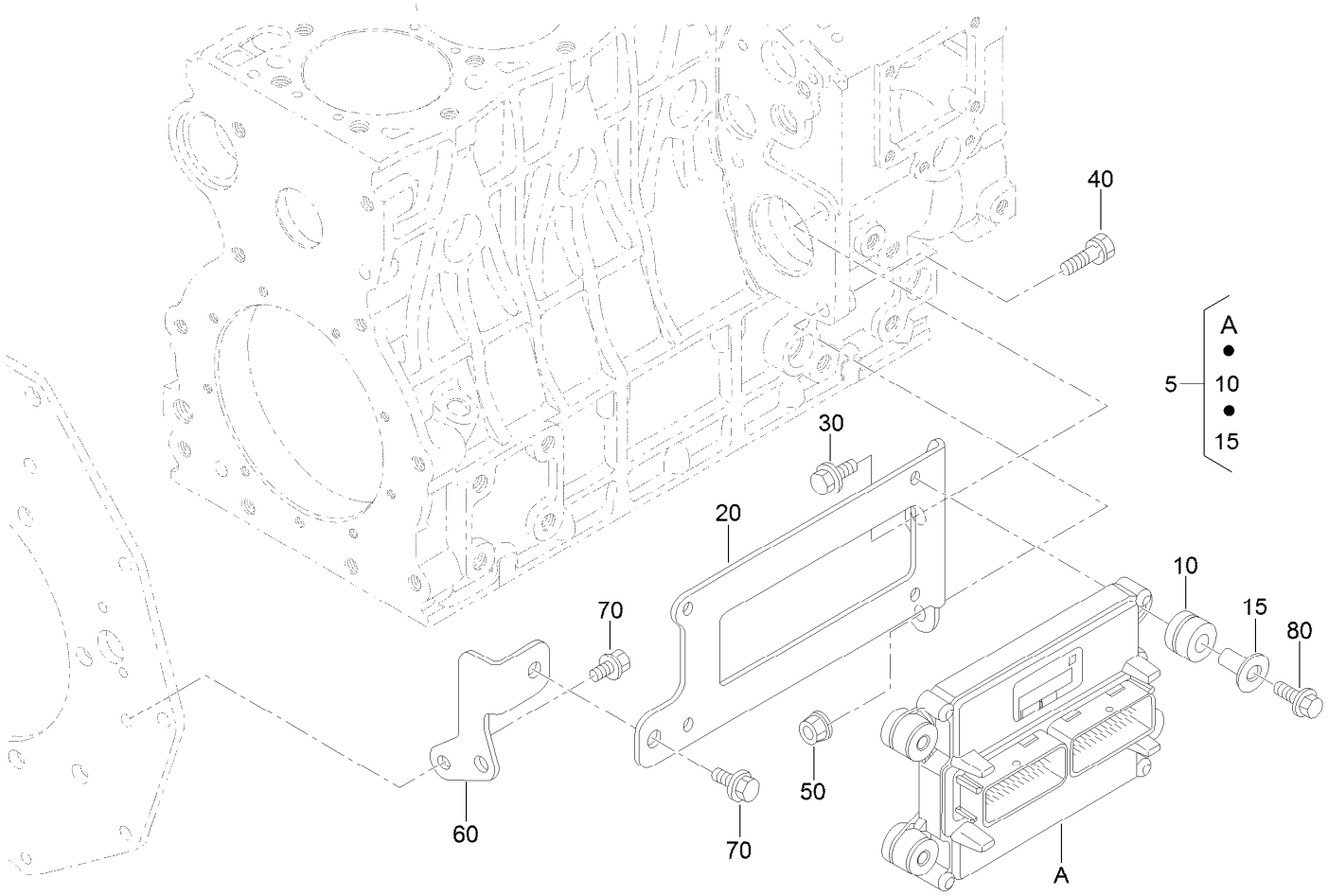

Electronic Control Unit Assembly

Ref.	*Part Number*	*Qty.*	*Description*
5	133-2789	1	Electronic Control Unit ASM
10	127-0501	4	Rubber-Cushion
15	127-0500	4	Spacer (E C U)
20	127-0502	1	Stay-E C M
30	127-0406	1	Bolt-Flange
40	98-7697	1	Bolt
50	112-2492	1	Nut-Flange
60	127-0503	1	Stay-E C M
70	115-8504	2	Bolt-Flange
80	125-9094	4	Bolt-Flange

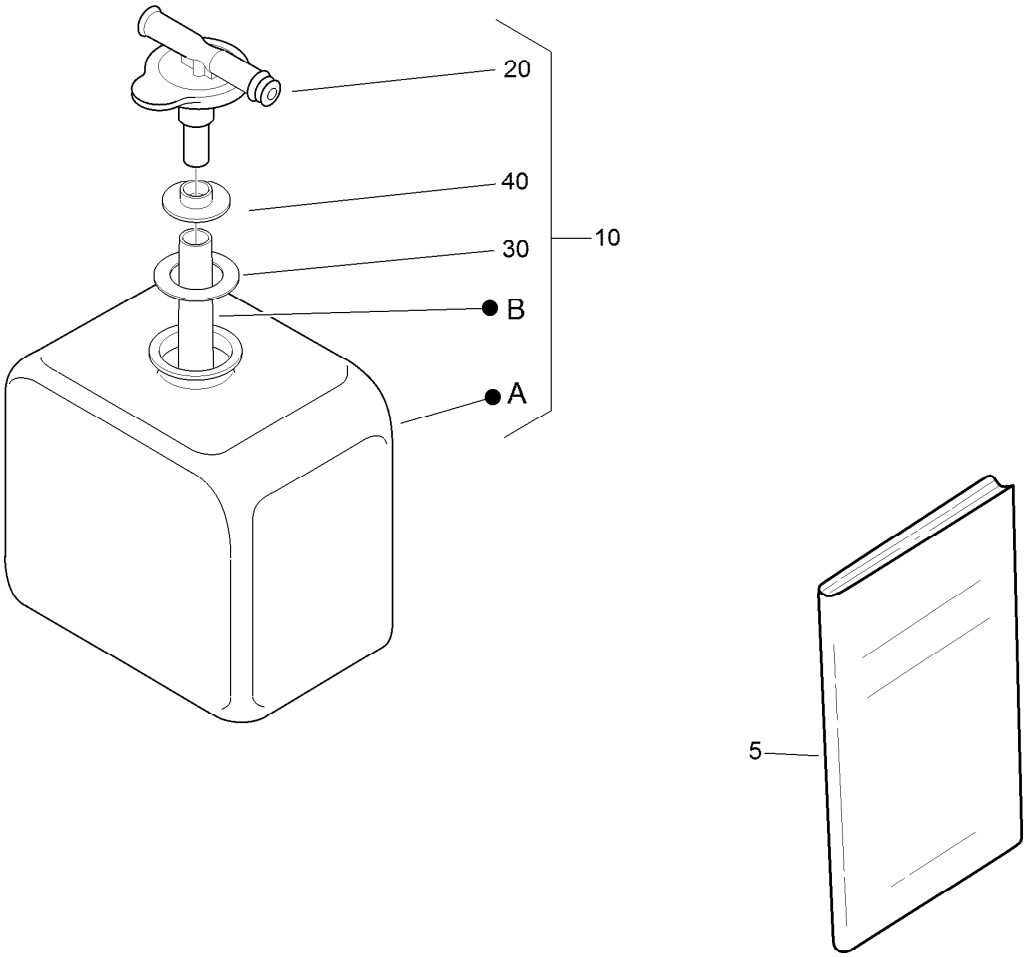

Miscellaneous Engine Parts

Ref.	*Part Number*	*Qty.*	*Description*
5	136-2287	1	Manual-Owners
10	108-0638	1	Bottle-Overflow
20	105-3754	1	Cap
30	105-3755	1	Gasket
40	105-3756	1	Plate

Attachments and Accessories

For 41394 Multi Pro 5800-G Turf Sprayer with ExcelaRate Spray System

Product Name	Model/Part
Premium All Season Hydraulic Fluid (55 Gallon Drum)	108-1177
Premium All Season Hydraulic Fluid (5 Gallon Pail)	108-1178
Premium Heavy Duty All Season Gear Lube (Pail)	108-1188
Premium All Purpose Grease (Tube)	108-1190
Premium Heavy Duty All Season Gear Lube (Quart)	108-1591
Spark Arrestor	115-2919
Tire	119-6021
Beacon Kit	120-8505
License Plate Kit	120-8506
Covered Boom Spring Upgrade Kit	120-8508
Premium Engine Oil 10w30 (55 Gal)	121-6392
Premium Engine Oil 10w30 (5 Gallon Pail)	121-6393
Wheel And Tire Asm	127-1100
Lance Suction Assembly	127-9826
Low Flow Kit	130-7258
Ultra Sonic Boom Finishing Kit	130-8229
Right Hand Step Kit	130-8230
Left Hand Step Kit	130-8231
Foam Marker Finishing Kit	130-8292
Pivoting Hose Reel Finishing Kit, 2014 and Before Multi-Pro 5800 Turf Sprayer	131-3291
Manual Spray Kit	132-5570
Pump Head Kit	133-2898
Rear Work Light Kit	41010
Single Nozzle Kit	41023
Hand Spray Wand Kit	41118
Pro Foam Concentrate (4 x 1 Gallon)	41157
Ultra Sonic Boom Leveling Kit	41219
Foam Marker Kit	41232
Drift Reduction Boom Shroud Kit	41602
Pro-Foam	41607
EU Compliance Kit	41608
Eductor Kit	41612
Tank Rinse Kit	41614
Pivoting Hose Reel Kit	41621
Eductor Kit	41622
GeoLink Precision Spray System	41623
CDMA RTK Correction Modem Kit, GeoLink Precision Spray System	41624
GSM RTK Correction Modem Kit, GeoLink Precision Spray System	41625
GeoLink Reference Antenna Kit	41626
Road Light / Homologation Kit	41628
GeoLink Spray System Finishing Kit, 2016 and After Multi Pro 5800 Turf Sprayer	41632

Notes:

Notes:

Notes:

TORO®

Count on it.