Form No. 3412-592 Rev B

TORO®

Count on it.

Parts Catalog

# GrandStand® Mower

## With 91cm TURBO FORCE® Cutting Unit

**Model No. 74534TE—Serial No. 400000000 and Up**

Register at www.Toro.com.
Original Instructions (EN)

CE

*3412-592* B

# Ordering Replacement Parts

To order replacement parts, please supply the part number, the quantity, and the description of each part desired.

### Understanding Reference Numbers

Each identified part in an illustration has a reference number. The reference number for a part also appears in the parts list, along with other information about the part.

This catalog uses two special reference number formats, one to indicate parts in a service assembly and another to indicate the quantity of a given part in an illustration.

### Service Assembly Reference Numbers

Parts in service assemblies have reference numbers in the form a:b. The a represents the reference number of the entire service assembly and the b represents a sequential number unique to each part within the service assembly.

For example, a wheel assembly might be identified by reference number 6, the tire by 6:1, the valve by 6:2, and the wheel by 6:3. When you order the assembly identified by reference number 6, you receive all parts identified by reference numbers 6:1,6:2, and 6:3. However, you may also order any part individually. Reference numbers of this type appear in illustration and in parts lists.

### Reference Numbers Indicating Quantity

In an illustration, if a reference number indicates more than one part, the reference number has the form nX y. The n represents the quantity of the part, the X is the multiplication symbol, and the y represents the reference number.

For example, in an illustration, the reference number 2X 37 means that two of the parts identified by reference number 37 are indicated.

# Contents

Main Frame Assembly . . . . . 4
Wheel and Bearing Assembly No. 112-3810 . . . . . 6
Parking Brake Assembly . . . . . 8
Height-of-Cut Plate Assembly . . . . . 10
Deck Lift Assembly . . . . . 12
Deck Lift Spring Assembly No. 119-2337 . . . . . 14
Cushion and Platform Assembly . . . . . 16
Cushion Assembly No. 130-1767 . . . . . 18
Platform Assembly No. 132-9402 . . . . . 20
Traction Drive Assembly . . . . . 22
Hydraulic Motor Assembly 104-1171 . . . . . 24
Pump Idler Assembly No. 117-7685 . . . . . 26
Motion Control Assembly . . . . . 28
Engine Assembly . . . . . 30
Fuel Tank Assembly . . . . . 32
Vent Hose Assembly . . . . . 34
Electrical Assembly . . . . . 36
Deck Assembly . . . . . 38
Deflector Assembly No. 119-2347 . . . . . 40
Spindle Assembly No. 117-7638 . . . . . 42
Deck Decal Assembly No. 121-6015 . . . . . 44
Attachments and Accessories . . . . . 46

**© 2018—The Toro® Company**
**8111 Lyndale Avenue South**
**Bloomington, MN 55420**



**Contact us at www.Toro.com.**
**Printed in the USA.**
**All Rights Reserved**

# Main Frame Assembly

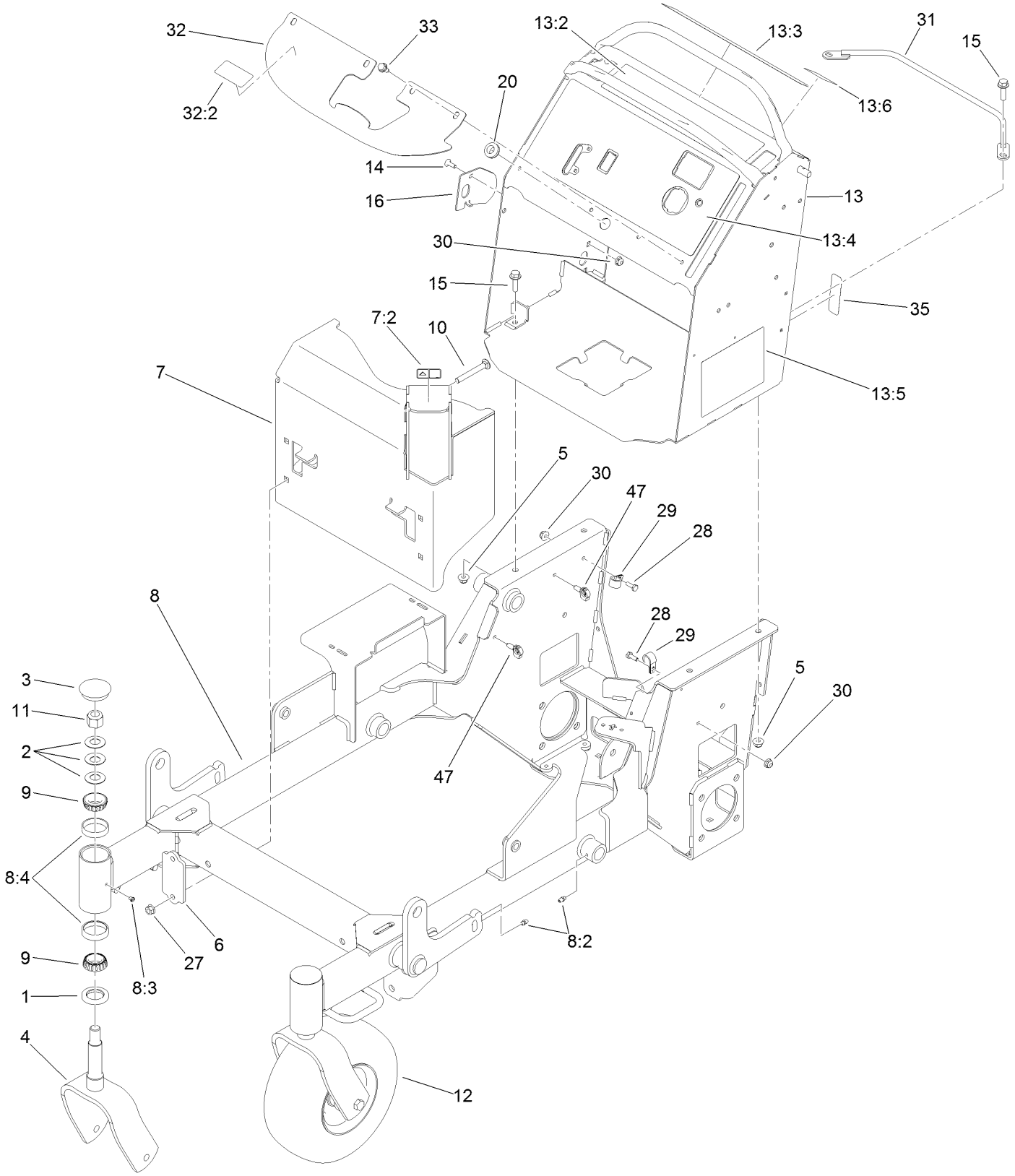

# Main Frame Assembly (continued)

| Ref. | Part Number | Qty. | Description |
|---|---|---|---|
| 1 | 116-5647 | 2 | Seal-Grease |
| 2 | 1-633508 | 6 | Washer-Bellville |
| 3 | 103-4882 | 2 | Cap-Grease |
| 4 | 121-7988-01 | 2 | Fork-Caster |
| 5 | 104-8301 | 4 | Nut-HF, NI |
| 6 | 119-7303-01 | 2 | Bracket-Mounting, Guard |
| 7 | 116-8739 | 1 | Muffler Guard ASM |
| 7:2 | 106-5517 | 1 | Decal-Warning |
| 8 | 125-4650 | 1 | Frame ASM |
| 8:2 | 302-5 | 7 | Fitting-Grease |
| 8:3 | 1-811010 | 2 | Plug |
| 8:4 | 1-543508 | 4 | Cup-Bearing |
| 9 | 1-543509 | 4 | Bearing-Roller, Tapered |
| 10 | 3231-10 | 4 | Screw-CARR |
| 11 | 3296-51 | 2 | Nut-Lock, NI |
| 12 | 112-3810 | 2 | Wheel/Tire And Bearing ASM |
| 13 | 125-4676 | 1 | Control Tower ASM |
| 13:2 | 117-0454 | 1 | Decal-OPC |
| 13:3 | 117-3626 | 1 | Decal-Warning |
| 13:4 | 125-4679 | 1 | Decal-Panel, Control |
| 13:5 | 119-0241 | 1 | Decal-Service Aid |
| 13:6 | 120-6447 | 1 | Decal-Stability, CE |
| 14 | 1-807512 | 1 | Bolt-CARR |
| 15 | 119-4061 | 4 | Screw-HHF |
| 16 | 119-7312 | 1 | Plate-Striker |
| 20 | 112-7069 | 1 | Grommet |
| 27 | 32128-21 | 4 | Nut-HF |
| 28 | 321-4 | 2 | Screw-HH |
| 29 | 2412-87 | 2 | Clamp-Cable |
| 30 | 104-7201 | 3 | Nut-HF |
| 31 | 119-1878-03 | 1 | Retainer-Cable |
| 32 | 119-0239 | 1 | Cover-Tank |
| 32:2 | 116-8775 | 1 | Decal-Fill, Fuel |
| 33 | 32144-70 | 4 | Screw-HWHTF |
| 35 | 116-8772 | 1 | Decal-Fuse |
| 47 | 32180-040 | 2 | Clip-Harness |

# Wheel and Bearing Assembly No. 112-3810

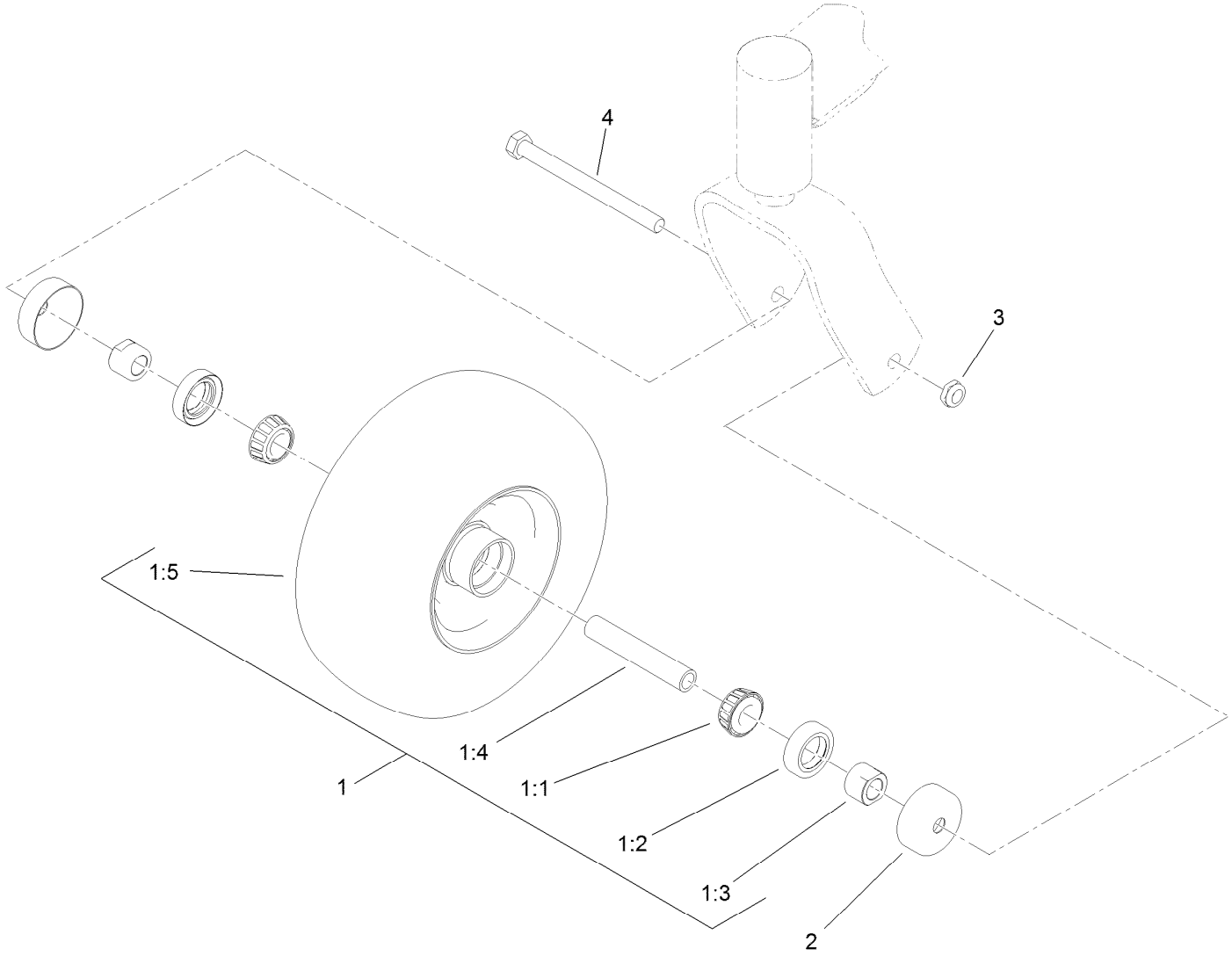

# Wheel and Bearing Assembly No. 112-3810 (continued)

| Ref. | Part Number | Qty. | Description |
|---|---|---|---|
| 1 | | 1 | Wheel And Bearing ASM ● |
| 1:1 | 1-633585 | 2 | Bearing-Cone, Taper |
| 1:2 | 103-0063 | 2 | Seal-Caster |
| 1:3 | 103-3051 | 1 | Spacer-Nut ■ |
| 1:4 | 126-5359 | 1 | Caster Axle ASM |
| 1:5 | 110-9965 | 1 | Wheel And Tire ASM |
| 2 | 103-2768 | 2 | Guard-Seal |
| 3 | 3296-45 | 1 | Nut-Hex |
| 4 | 325-20 | 1 | Screw-HH |

● Not serviced separately
■ Use Pro-Lock, Nut Type (P/N 1-840022, .5ml tube) on spacer nut

# Parking Brake Assembly

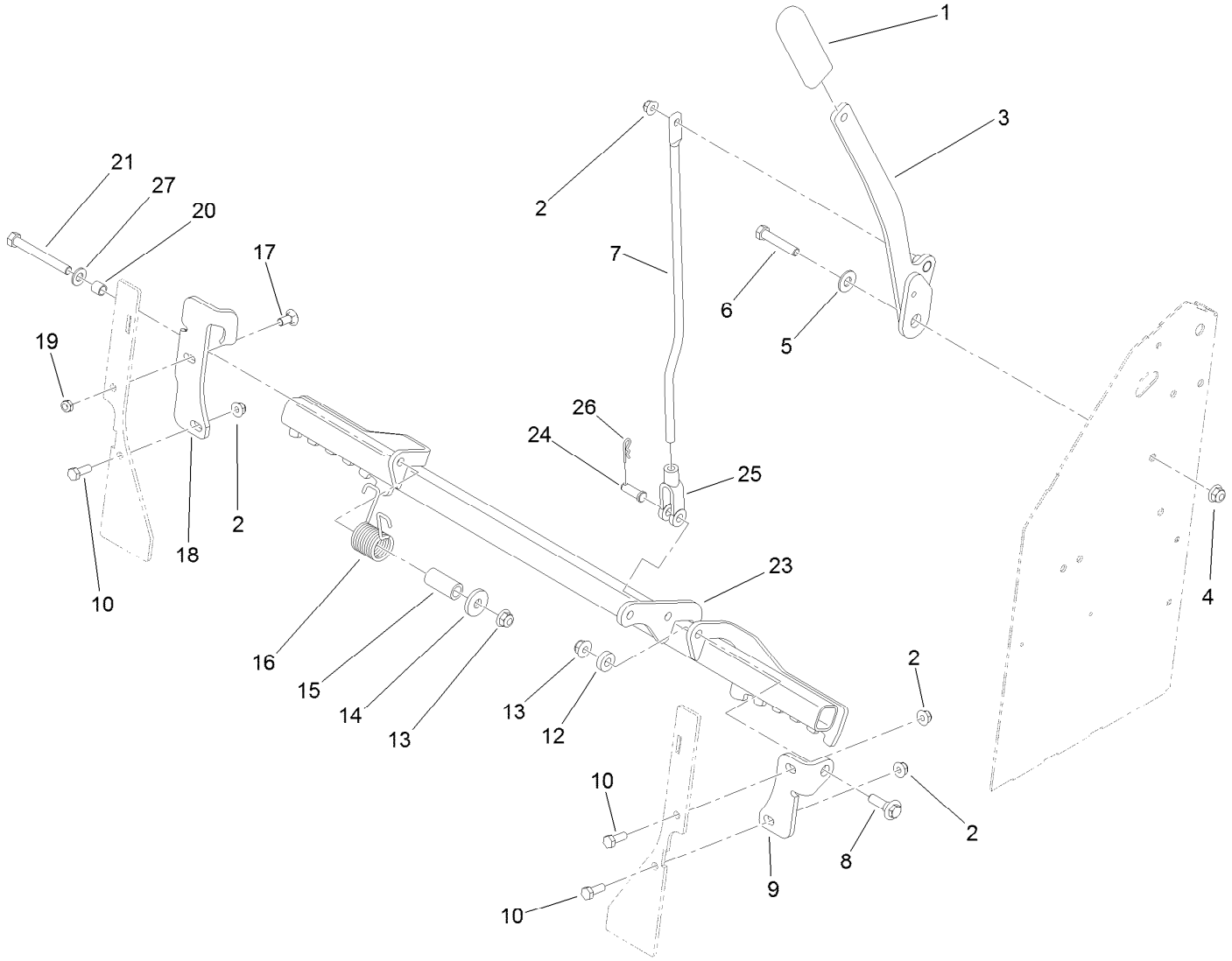

# Parking Brake Assembly (continued)

| Ref. | Part Number | Qty. | Description |
|---|---|---|---|
| 1 | 1-633268 | 1 | Grip-Lever |
| 2 | 104-8300 | 4 | Nut-HF, NI |
| 3 | 119-1861-01 | 1 | Handle-Brake |
| 4 | 104-8301 | 1 | Nut-HF, NI |
| 5 | 3256-4 | 1 | Washer-Flat |
| 6 | 323-10 | 1 | Screw-HH |
| 7 | 117-6199 | 1 | Rod-Link, Brake |
| 8 | 614672 | 1 | Screw-Shoulder, HWH |
| 9 | 119-1860-01 | 1 | Bracket-Brake Mount, LH |
| 10 | 322-4 | 3 | Screw-HH |
| 12 | 5-0652 | 1 | Spacer |
| 13 | 104-8301 | 2 | Nut-HF, NI |
| 14 | 1-373034 | 1 | Washer |
| 15 | 117-9683 | 1 | Spacer |
| 16 | 108-4052 | 1 | Spring-Torsion |
| 17 | 3230-1 | 1 | Bolt-CARR |
| 18 | 125-4667-01 | 1 | Bracket-Brake Mount, RH |
| 19 | 3296-47 | 1 | Nut-Lock, NI |
| 20 | 117-9684 | 1 | Spacer |
| 21 | 323-20 | 1 | Screw-HH |
| 23 | 116-4600-03 | 1 | Bar-Brake |
| 24 | 283-2 | 1 | Pin-Clevis |
| 25 | 1-633131 | 1 | Yoke-Linkage, Brake |
| 26 | 3290-307 | 1 | Pin-Cotter |
| 27 | 3256-24 | 1 | Washer-Flat |

# Height-of-Cut Plate Assembly

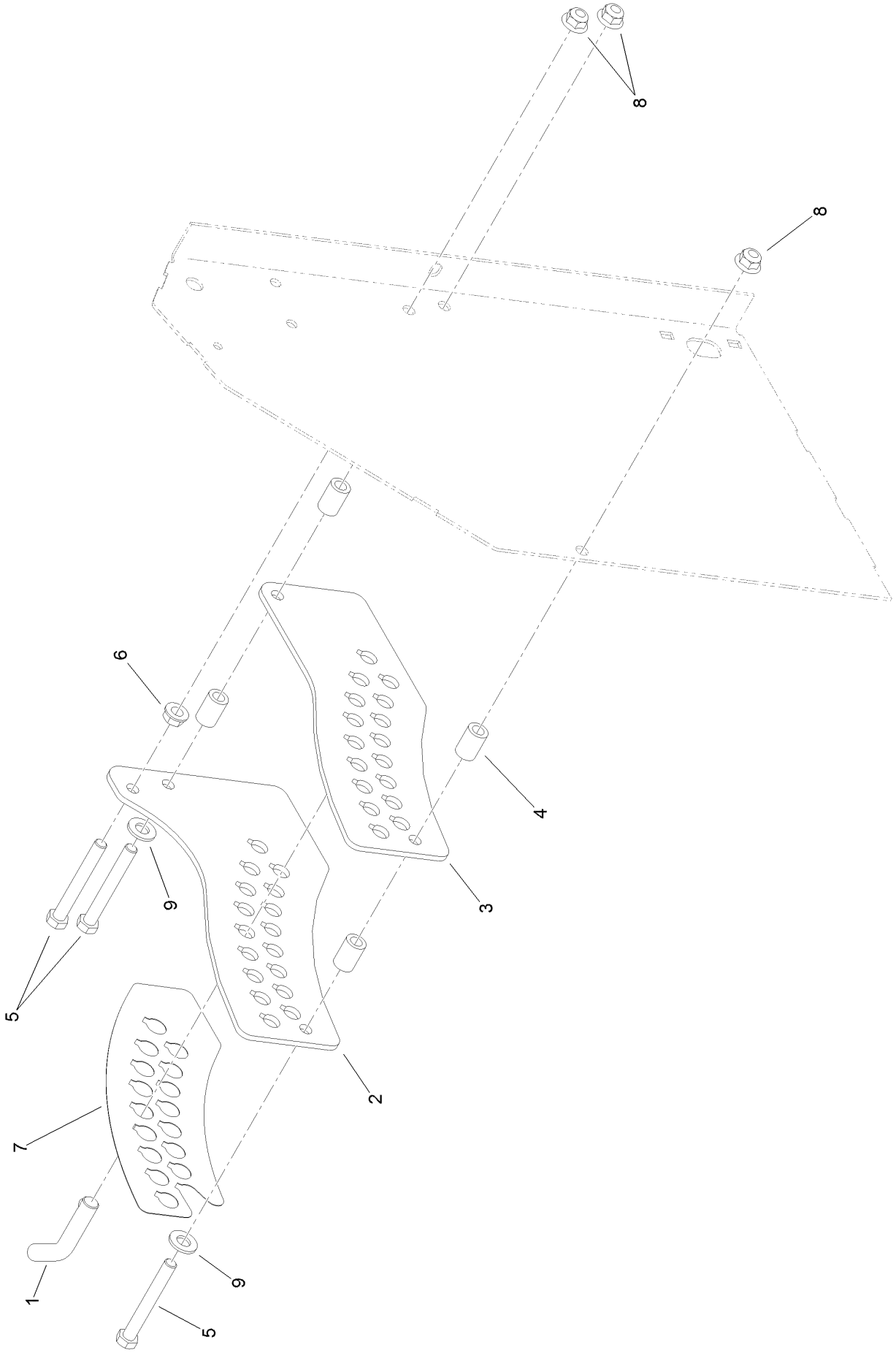

# Height-of-Cut Plate Assembly (continued)

| Ref. | Part Number | Qty. | Description |
|---|---|---|---|
| 1 | 116-5584 | 1 | Pin-HOC |
| 2 | 117-5286-01 | 1 | Plate-HOC, Outside |
| 3 | 117-5287-01 | 1 | Plate-HOC, Inside |
| 4 | 114-2754 | 4 | Spacer |
| 5 | 323-14 | 3 | Screw-HH |
| 6 | 3290-357 | 1 | Nut-HHF, Whiz |
| 7 | 119-2317 | 1 | Decal-HOC |
| 8 | 104-8301 | 3 | Nut-HF, NI |
| 9 | 3256-24 | 2 | Washer-Flat |

# Deck Lift Assembly

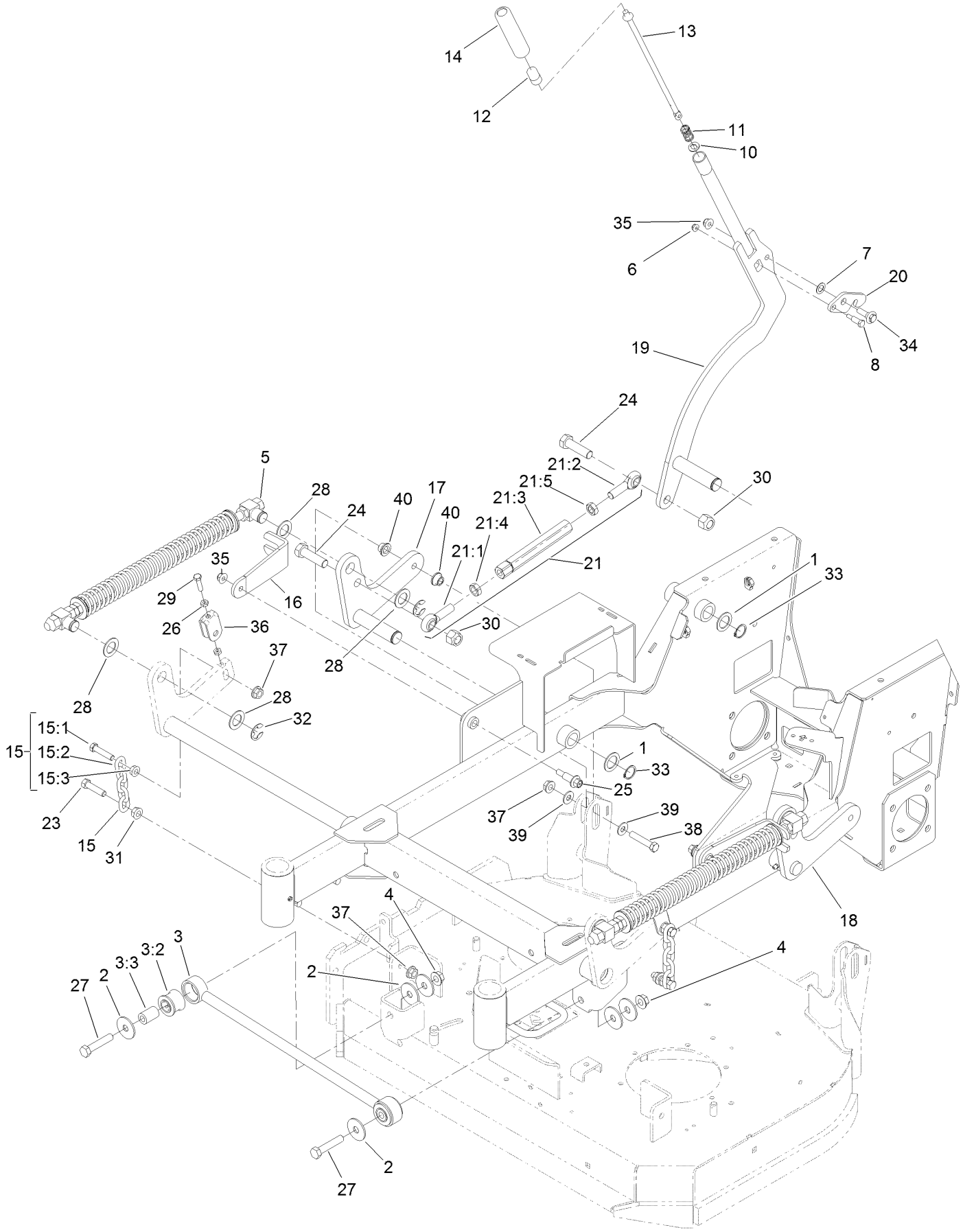

# Deck Lift Assembly (continued)

| Ref. | Part Number | Qty. | Description |
|---|---|---|---|
| 1 | 1-523157 | 3 | Washer-Spacer |
| 2 | 86-1990 | 4 | Washer-Thrust |
| 3 | 109-5013 | 1 | Panhard Rod ASM |
| 3:2 | 109-5009 | 2 | Bushing-Suspension, Rubber |
| 3:3 | 109-5010 | 2 | Spacer |
| 4 | 32128-23 | 2 | Nut-HF |
| 5 | 119-2337 | 2 | Deck Lift Spring ASM |
| 6 | 104-7201 | 1 | Nut-HF |
| 7 | 98-1629 | 1 | Washer |
| 8 | 119-2309 | 1 | Bolt-Shoulder |
| 10 | 114-1207 | 1 | Washer-Special |
| 11 | 114-8187 | 1 | Spring-Compression |
| 12 | 115-2750 | 1 | Knob |
| 13 | 136-0530 | 1 | Rod-Latch, Release |
| 14 | 115-3592 | 1 | Grip |
| 15 | 116-0756 | 2 | Deck Lift Chain ASM |
| 15:1 | 1-633447 | 1 | Chain-Lift, Deck |
| 15:2 | 109-9065 | 1 | Screw-HH |
| 15:3 | 32128-37 | 1 | Nut-HF |
| 16 | 119-2302-01 | 2 | Bracket-Fork |
| 17 | 121-6014-01 | 1 | Arm-Lift, RH |
| 18 | 121-6013-01 | 1 | Arm-Lift, LH |
| 19 | 117-5290-01 | 1 | Arm-Lift, HOC |
| 20 | 117-5292 | 1 | Latch-HOC |
| 21 | 119-0383 | 1 | Deck Lift Link ASM |
| 21:1 | 1-633029 | 1 | Balljoint-Spherical |
| 21:2 | 117-5291 | 1 | Balljoint-Spherical |
| 21:3 | 119-0382 | 1 | Link-Lift, Deck |
| 21:4 | 3220-6 | 1 | Nut-Jam |
| 21:5 | 117-5293 | 1 | Nut-Jam |
| 23 | 324-7 | 2 | Screw-HH |
| 24 | 327-22 | 2 | Screw-HH |
| 25 | 62-1330 | 2 | Bolt-Shoulder |
| 26 | 3218-2 | 4 | Nut-Jam |
| 27 | 325-10 | 2 | Screw-HH |
| 28 | 119-2332 | 8 | Washer-Flat |
| 29 | 119-3626 | 2 | Screw-HH |
| 30 | 3296-53 | 2 | Nut-Lock, NI |
| 31 | 32128-37 | 2 | Nut-HF |
| 32 | 32151-103 | 4 | Ring-Retaining, EXT |
| 33 | 32151-29 | 3 | Ring-Retaining |
| 34 | 614672 | 1 | Screw-Shoulder, HWH |
| 35 | 104-8301 | 3 | Nut-HF, NI |
| 36 | 109-9066 | 2 | Yoke-Adjust, Deck |
| 37 | 32128-42 | 6 | Nut-HF |
| 38 | 324-9 | 2 | Screw-HH |
| 39 | 3256-4 | 4 | Washer-Flat |
| 40 | 116-2428 | 4 | Bushing-Flanged |

# Deck Lift Spring Assembly No. 119-2337

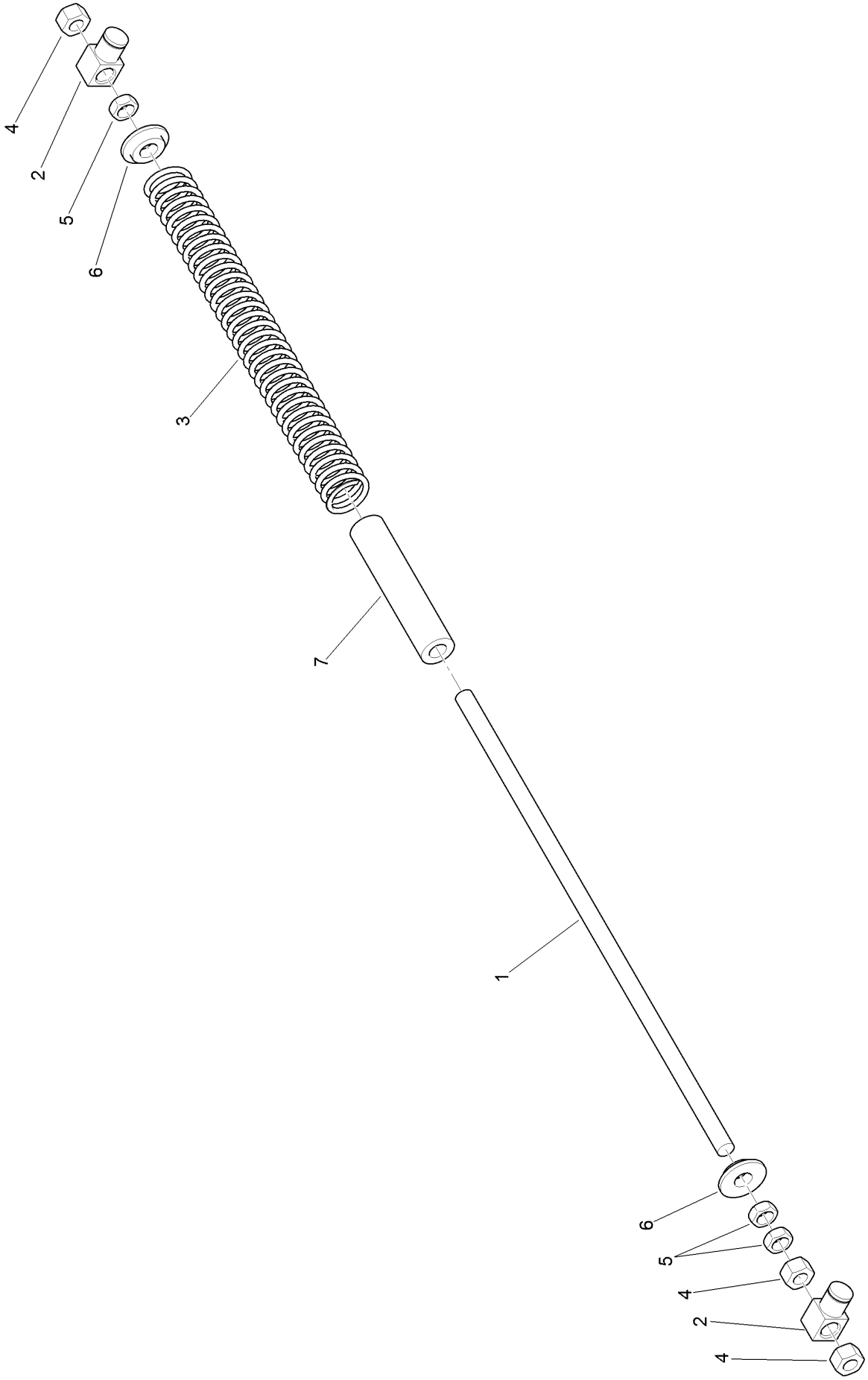

# Deck Lift Spring Assembly No. 119-2337 (continued)

| Ref. | Part Number | Qty. | Description |
|---|---|---|---|
| 1 | 1-633096 | 1 | Rod-Lift, Deck |
| 2 | 1-633441 | 2 | Swivel-Deck Mount, Rear |
| 3 | 119-2327 | 1 | Spring-Compression |
| 4 | 3217-11 | 3 | Nut-Hex |
| 5 | 3218-6 | 3 | Nut-Jam |
| 6 | 119-2334 | 2 | Washer-Step |
| 7 | 119-2335 | 1 | Tube-Guide, Spring |

# Cushion and Platform Assembly

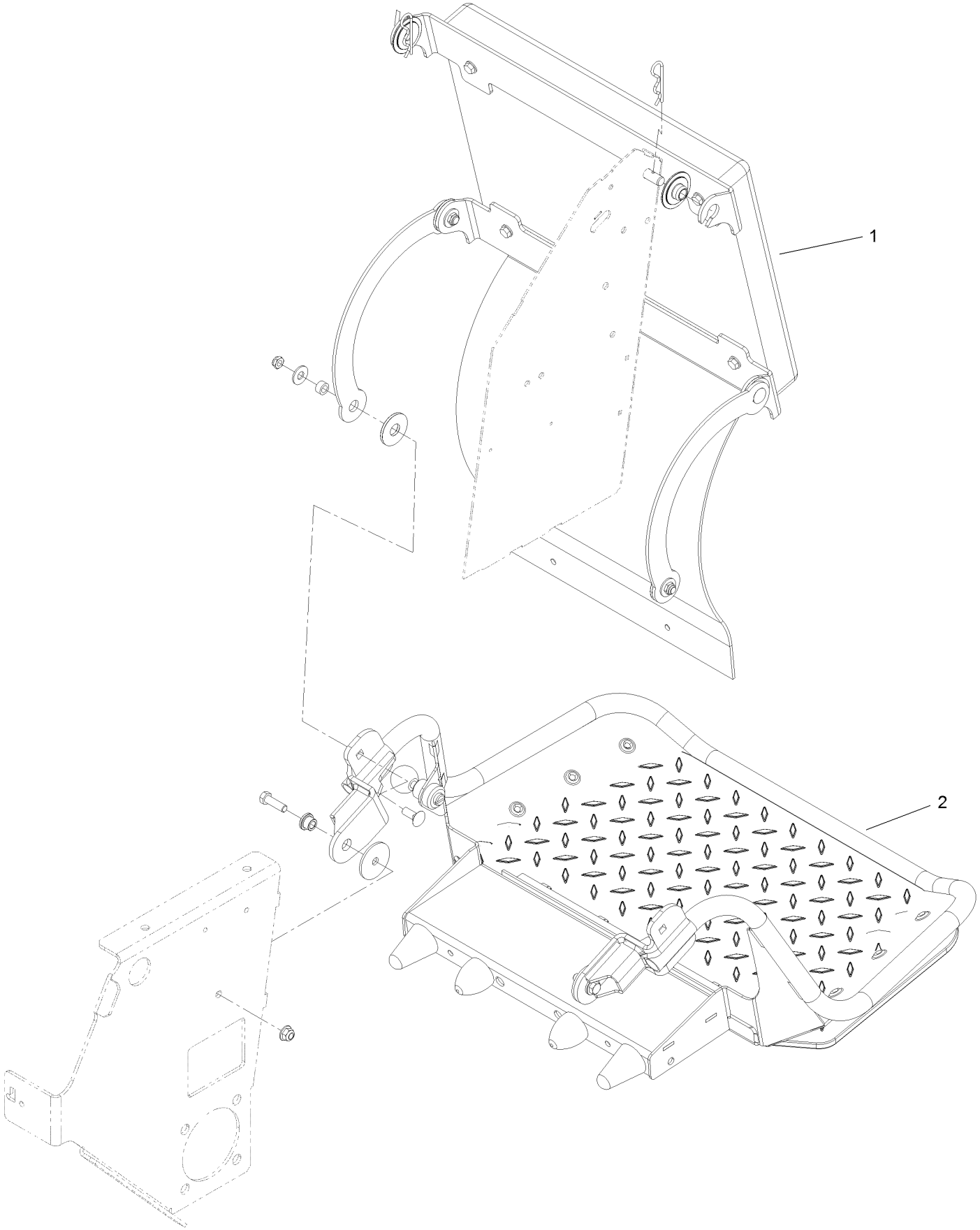

# Cushion and Platform Assembly (continued)

| Ref. | Part Number | Qty. | Description |
|---|---|---|---|
| 1 | 130-1767 | 1 | Cushion ASM |
| 2 | 132-9402 | 1 | Platform ASM |

# Cushion Assembly No. 130-1767

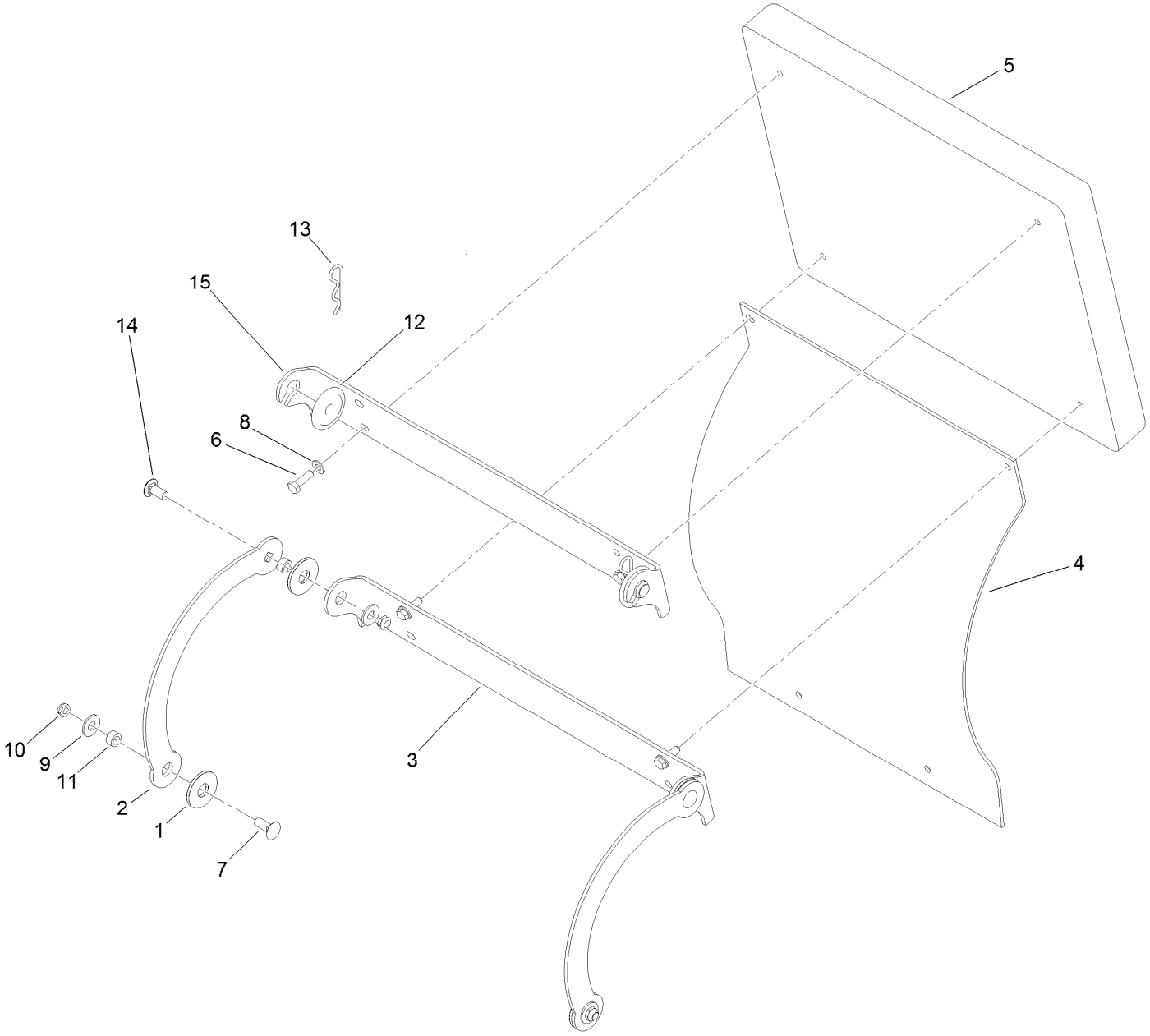

# Cushion Assembly No. 130-1767 (continued)

| Ref. | Part Number | Qty. | Description |
|---|---|---|---|
| 1 | 114-0463 | 4 | Washer-Friction, Composite |
| 2 | 114-1915-01 | 2 | Link-Pad |
| 3 | 116-2061-03 | 1 | Hinge-Pad |
| 4 | 130-1769 | 1 | Shield-Rear |
| 5 | 117-9739 | 1 | Pad-Cushion |
| 6 | 121-7999 | 4 | Screw-HH |
| 7 | 3231-2 | 2 | Bolt-CARR |
| 8 | 3256-23 | 4 | Washer-Plain |
| 9 | 3256-4 | 4 | Washer-Flat |
| 10 | 3296-59 | 4 | Nut-Lock, NI |
| 11 | 111044 | 4 | Spacer |
| 12 | 116-2886 | 2 | Slide-Bushing |
| 13 | 3290-355 | 2 | Pin-Hair |
| 14 | 3231-27 | 2 | Screw-CARR |
| 15 | 116-2757-03 | 1 | Hinge-Pad |

# Platform Assembly No. 132-9402

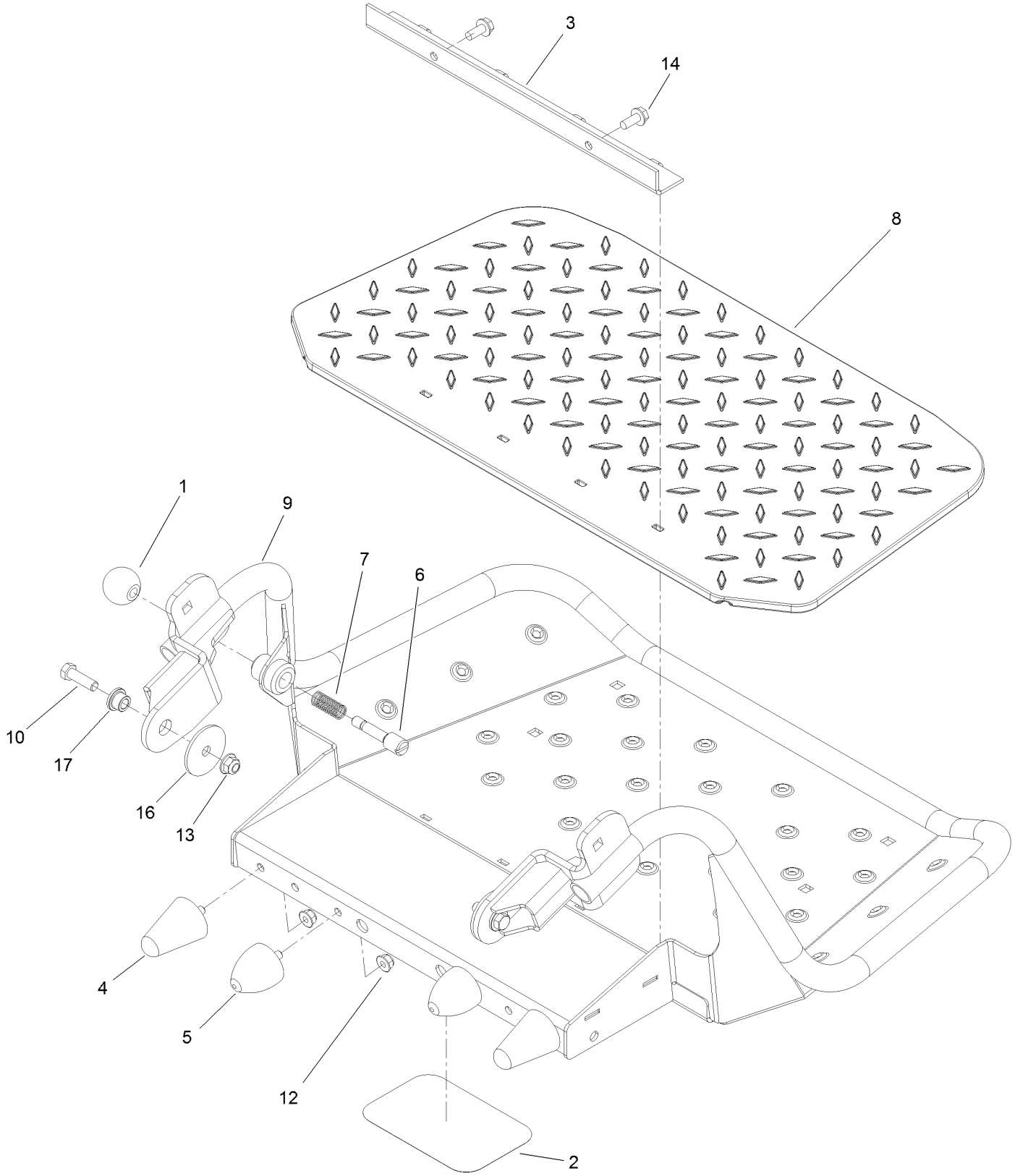

# Platform Assembly No. 132-9402 (continued)

| Ref. | Part Number | Qty. | Description |
|---|---|---|---|
| 1 | 1-603175 | 1 | Knob-Ball |
| 2 | 68-3640 | 1 | Decal |
| 3 | 114-1920-03 | 1 | Clamp-Shield |
| 4 | 114-1925 | 2 | Bumper-Rubber |
| 5 | 114-1926 | 2 | Bumper-Rubber |
| 6 | 119-8650 | 1 | Pin-Latch |
| 7 | 114-5348 | 1 | Spring |
| 8 | 126-7157 | 1 | Mat-Platform |
| 9 | 132-9403-01 | 1 | Platform ASM |
| 10 | 323-7 | 2 | Screw-HH |
| 12 | 104-8300 | 4 | Nut-HF, NI |
| 13 | 104-8301 | 2 | Nut-HF, NI |
| 14 | 32144-11 | 2 | Screw-HWHTF |
| 16 | 83-1040 | 2 | Washer-Flat |
| 17 | 109-8788 | 2 | Bushing-Flanged |

# Traction Drive Assembly

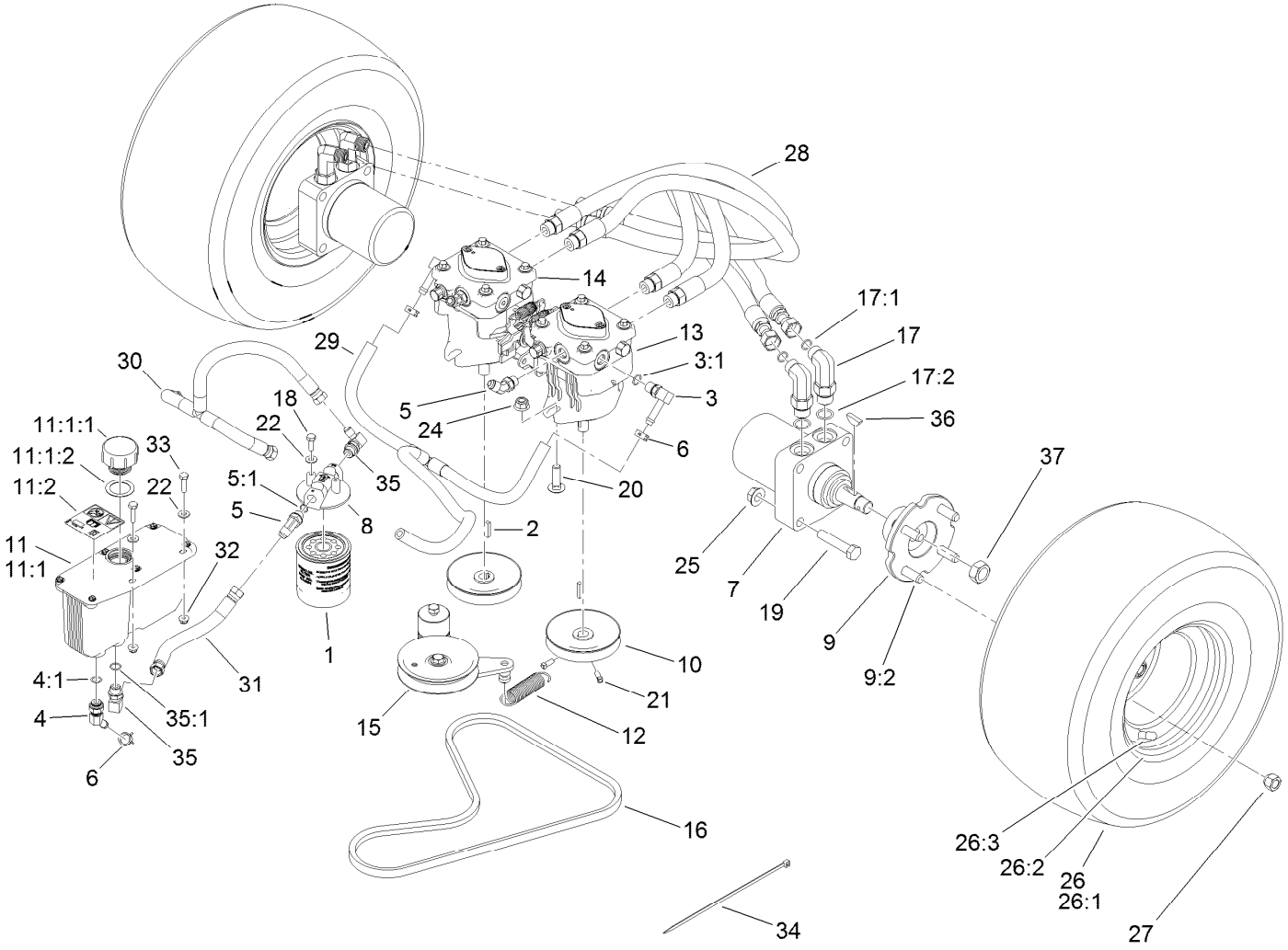

# Traction Drive Assembly (continued)

| Ref. | Part Number | Qty. | Description |
|---|---|---|---|
| 1 | 114-3494 | 1 | Element-Filter, 25 Micron |
| 2 | 1-807272 | 2 | Key |
| 3 | 100-4887 | 2 | Fitting-Elbow, 90 |
| 3:1 | 237-42 | 1 | O-Ring |
| 4 | 103-1807 | 1 | Fitting-Barbed, 45 DEG |
| 4:1 | 237-42 | 1 | O-Ring |
| 5 | 353-212 | 3 | Fitting-Elbow, 45 DEG |
| 5:1 | 237-42 | 1 | O-Ring |
| 6 | 103-1988 | 3 | Clamp-Hose |
| 7 | 104-1171 | 2 | HYD Motor ASM |
| 8 | 104-7836 | 1 | Head-Filter |
| 9 | 105-0800 | 2 | Wheel Hub ASM |
| 9:2 | 10-6830 | 4 | Stud-Type, Drive |
| 10 | 105-5648 | 2 | Pulley-Pump |
| 11 | 107-8433 | 1 | HYD Reservoir ASM |
| 11:1 | | 1 | Reservoir-HYD ● |
| 11:1:1 | 103-1948 | 1 | Cap-Reservoir, HYD |
| 11:1:2 | 103-1949 | 1 | Gasket-Cap |
| 11:2 | 115-4212 | 1 | Decal-Warning |
| 12 | 108-4056 | 1 | Spring-Extension |
| 13 | 119-0176 | 1 | Hydraulic Pump ASM |
| 14 | 119-0177 | 1 | Hydraulic Pump ASM |
| 15 | 117-7685 | 1 | Pump Idler ASM |
| 16 | 119-0174 | 1 | Belt-V |
| 17 | 119-8680 | 4 | Fitting-Elbow, 90 |

| Ref. | Part Number | Qty. | Description |
|---|---|---|---|
| 17:1 | 237-30 | 1 | O-Ring |
| 17:2 | 237-80 | 1 | O-Ring |
| 18 | 321-3 | 2 | Screw-HH |
| 19 | 325-10 | 8 | Screw-HH |
| 20 | 3232-3 | 4 | Bolt-CARR |
| 21 | 3241-5 | 4 | Screw-Set |
| 22 | 3256-22 | 4 | Washer-Flat |
| 24 | 114-8417 | 4 | Nut-HF, NI |
| 25 | 32128-23 | 8 | Nut-HF |
| 26 | 116-4587 | 2 | Wheel/Tire ASM |
| 26:1 | 116-4605 | 1 | Rim-8 Inch |
| 26:2 | 116-4606 | 1 | Tire |
| 26:3 | 232-27 | 1 | Stem-Valve |
| 27 | 242-50 | 8 | Nut-Lug |
| 28 | 119-0173 | 4 | HYD Hose ASM |
| 29 | 119-8745 | 1 | HYD Hose ASM |
| 30 | 119-0206 | 1 | HYD Hose ASM |
| 31 | 119-0203 | 1 | HYD Hose ASM |
| 32 | 104-7201 | 2 | Nut-HF |
| 33 | 321-6 | 2 | Screw-HH |
| 34 | 3290-378 | 1 | Tie-Cable |
| 35 | 103-1802 | 2 | Fitting-Elbow, 90 DEG |
| 35:1 | 237-42 | 1 | O-Ring |
| 36 | 3257-8 | 2 | Key-Woodruff |
| 37 | 85-7310 | 2 | Nut-Motor, Wheel |

● Not serviced separately

# Hydraulic Motor Assembly 104-1171

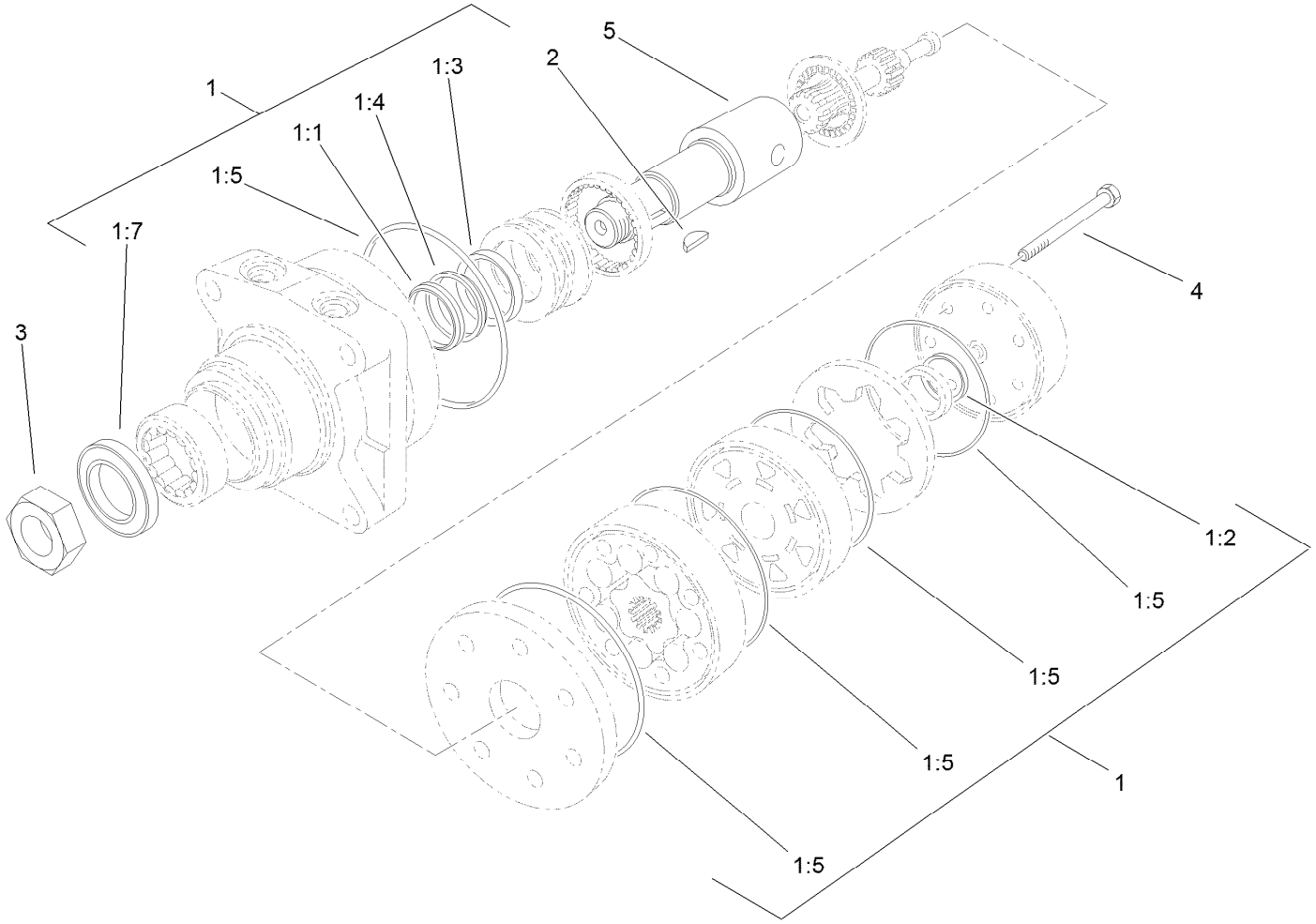

# Hydraulic Motor Assembly 104-1171 (continued)

| Ref. | Part Number | Qty. | Description |
|---|---|---|---|
| 1 | 1-000119 | 1 | Seal Kit |
| 1:1 | | 1 | Ring-Back Up ● |
| 1:2 | | 1 | Seal-Commutator ● |
| 1:3 | | 1 | Seal-Shaft (Viton) ● |
| 1:4 | | 1 | Washer-Back Up, Steel ● |
| 1:5 | | 5 | Ring-Seal (Viton) ● |
| 1:7 | | 1 | Seal-Dirt And Water ● |
| 2 | 3257-8 | 1 | Key-Woodruff |
| 3 | 85-7310 | 1 | Nut-Motor, Wheel |
| 4 | 106-5549 | 6 | Bolt-Special |
| 5 | 106-8764 | 1 | Shaft-Coupling |

● Not serviced separately

# Pump Idler Assembly No. 117-7685

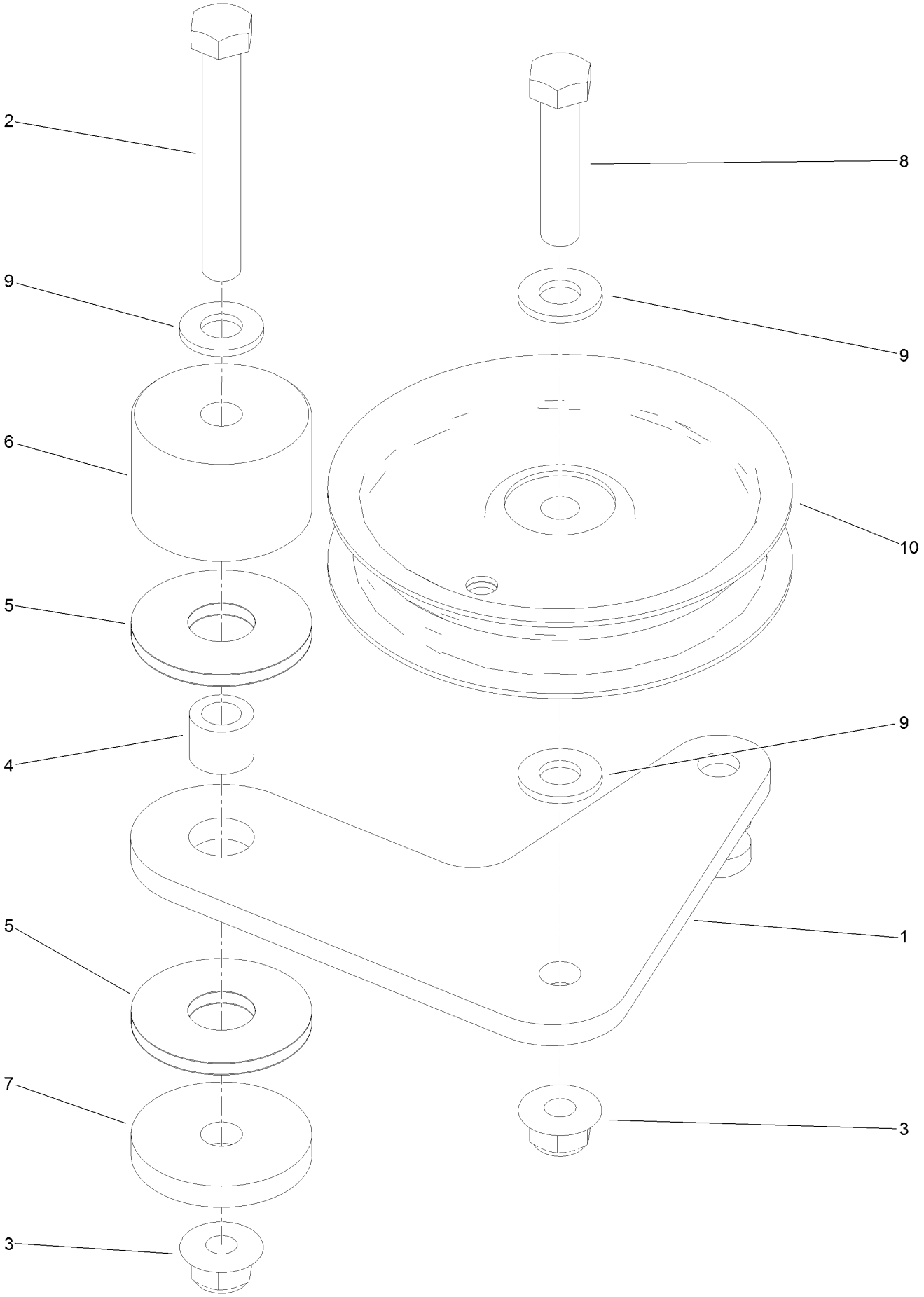

# Pump Idler Assembly No. 117-7685 (continued)

| Ref. | Part Number | Qty. | Description |
|---|---|---|---|
| 1 | 117-7684 | 1 | Plate-Idler |
| 2 | 323-13 | 1 | Screw-HH |
| 3 | 104-8301 | 2 | Nut-HF, NI |
| 4 | 1-413088 | 1 | Bushing-Lever, Lift |
| 5 | 114-0463 | 2 | Washer-Friction, Composite |
| 6 | 116-7599 | 1 | Hub, Idler |
| 7 | 110-9981 | 1 | Washer-Plain |
| 8 | 323-9 | 1 | Screw-HH |
| 9 | 3256-24 | 3 | Washer-Flat |
| 10 | 93-1622 | 1 | Pulley-Idler |

# Motion Control Assembly

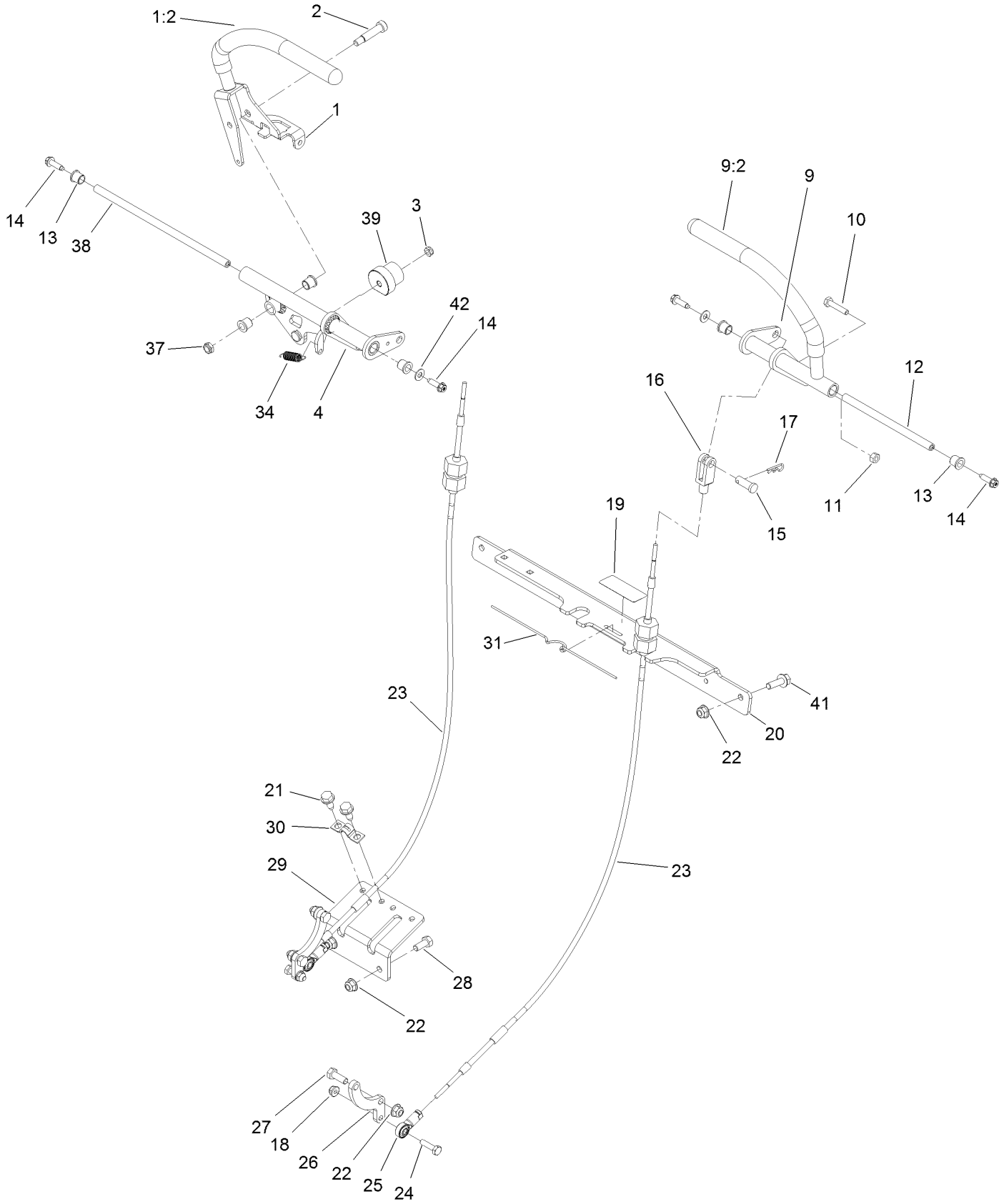

# Motion Control Assembly (continued)

| Ref. | Part Number | Qty. | Description |
|---|---|---|---|
| 1 | 120-8393 | 1 | RH Lever ASM |
| 1:2 | 119-0222 | 1 | Grip |
| 2 | 114-0239 | 1 | Screw-HSH |
| 3 | 3296-56 | 1 | Nut-Lock, NI |
| 4 | 131-7403 | 1 | RH Motion Control ASM |
| 9 | 125-4671 | 1 | LH Motion Control ASM |
| 9:2 | 119-0222 | 1 | Grip |
| 10 | 114-0282 | 2 | Screw-HH |
| 11 | 3217-5 | 2 | Nut-Hex |
| 12 | 119-1885 | 1 | Shaft-Pivot, Motion Control |
| 13 | 103-9928 | 6 | Bearing |
| 14 | 80-0700 | 4 | Screw-HH, Torx |
| 15 | 1-808284 | 2 | Pin-Clevis |
| 16 | 119-1869 | 2 | Yoke-Female |
| 17 | 3290-307 | 2 | Pin-Cotter |
| 18 | 104-7201 | 2 | Nut-HF |
| 19 | 119-1854 | 1 | Decal-Tracking, Hydro |
| 20 | 117-6239-01 | 1 | Bracket-Cross |

| Ref. | Part Number | Qty. | Description |
|---|---|---|---|
| 21 | 32144-70 | 4 | Screw-HWHTF |
| 22 | 104-8300 | 8 | Nut-HF, NI |
| 23 | 117-6225 | 2 | Cable ASM |
| 24 | 321-6 | 2 | Screw-HH |
| 25 | 117-6222 | 2 | Rod End-Ball Joint |
| 26 | 117-6204 | 2 | Arm-Control, Pump |
| 27 | 322-4 | 4 | Screw-HH |
| 28 | 322-3 | 2 | Screw-HH |
| 29 | 117-6238-01 | 1 | Bracket-Clamp, Cable |
| 30 | 93-2279 | 2 | Clamp-Cable |
| 31 | 114-0433 | 1 | Clip-Spring |
| 34 | 114-0249 | 1 | Spring-Extension |
| 37 | 3296-47 | 1 | Nut-Lock, NI |
| 38 | 119-1886 | 1 | Shaft-Pivot |
| 39 | 126-1499 | 1 | Cam |
| 41 | 3234-29 | 2 | Screw-HHF |
| 42 | 3256-1 | 2 | Washer-Flat |

# Engine Assembly

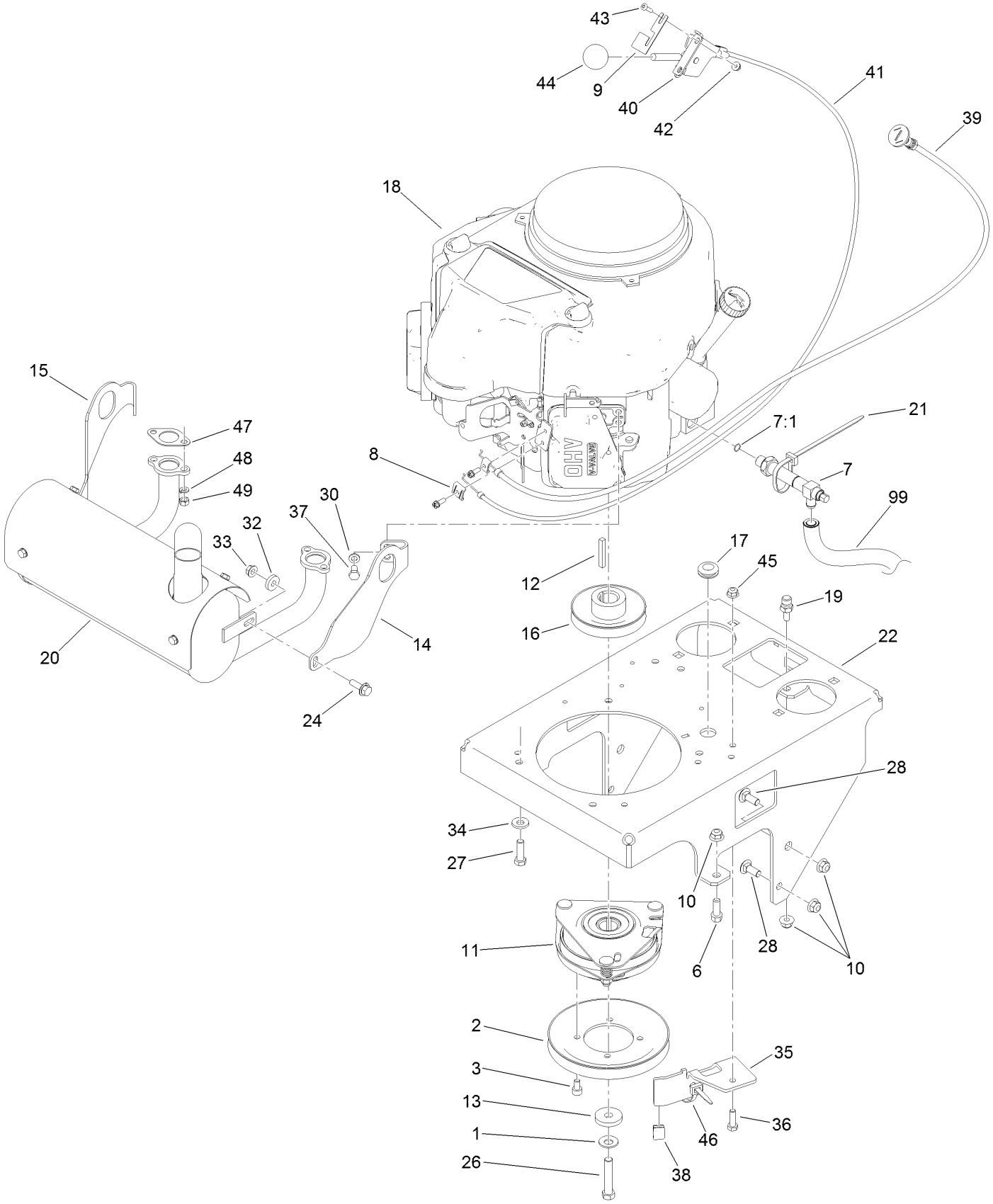

# Engine Assembly (continued)

| Ref. | Part Number | Qty. | Description |
|---|---|---|---|
| 1 | 1-603610 | 1 | Washer-Spring |
| 2 | 119-0215 | 1 | Pulley |
| 3 | 119-0221 | 4 | Screw-HSH |
| 6 | 92-1624 | 2 | Screw-HWH |
| 7 | 116-6126 | 1 | Valve-Drain Oil |
| 7:1 | 138-4636 | 1 | O-Ring |
| 8 | 81-1690 | 1 | Clamp-Cable |
| 9 | 119-1883 | 1 | Plate-Set, Throttle |
| 10 | 104-8301 | 7 | Nut-HF, NI |
| 11 | 119-0220 | 1 | Clutch/Brake ASM |
| 12 | 608006 | 1 | Key-Square |
| 13 | 107-4136 | 1 | Washer |
| 14 | 116-2353 | 1 | Bracket-Muffler Mount, LH |
| 15 | 116-2354 | 1 | Bracket-Muffler Mount, RH |
| 16 | 112-7067 | 1 | Pulley |
| 17 | 112-7069 | 1 | Grommet |
| 18 | | 1 | Engine-Kawasaki, Fs541V ■▲ |
| 18:1 | 92-2153 | 1 | Spark Plug ● |
| 18:2 | 119-5852 | 1 | Filter-Oil ● |
| 18:3 | 120-2235 | 1 | Filter-Fuel ● |
| 18:4 | 120-7447 | 1 | Element-Filter, Air ● |
| 19 | 132-4729 | 1 | Anchor-Spring, Short |
| 20 | 116-2351 | 1 | Muffler |
| 21 | 3290-378 | 1 | Tie-Cable |
| 22 | 119-0155-01 | 1 | Base-Engine |
| 24 | 3234-29 | 2 | Screw-HHF |
| 26 | 3212-9 | 1 | Screw-HH |
| 27 | 323-7 | 4 | Screw-HH |
| 28 | 3231-2 | 4 | Bolt-CARR |
| 30 | 3253-4 | 4 | Washer-Lock |
| 32 | 104-7658 | 2 | Spacer |
| 33 | 32128-25 | 2 | Nut-HF |
| 34 | 98-5975 | 3 | Washer-Belleville |
| 35 | 121-5984-03 | 1 | Bracket-Clutch Stop |
| 36 | 322-5 | 1 | Screw-HH |
| 37 | 33114-016 | 4 | Screw-HH |
| 38 | 109-3765 | 1 | Bumper |
| 39 | 106-9962 | 1 | Control-Choke, Push / Pull |
| 40 | 110-5547 | 1 | Lever-Control |
| 41 | 119-1882 | 1 | Cable-Control |
| 42 | 32128-17 | 2 | Nut-Lock, Flange |
| 43 | 110-0863 | 2 | Screw-Torx |
| 44 | 1-603175 | 1 | Knob-Ball |
| 45 | 104-8300 | 1 | Nut-HF, NI |
| 46 | 3290-378 | 2 | Tie-Cable |
| 47 | 1-653313 | 2 | Gasket-Exhaust |
| 48 | 114-3550 | 4 | Washer-Lock |
| 49 | 114-3549 | 4 | Nut |
| 99 | 103-1964 | 1 | Hose-Drain, Oil ● |

● Not illustrated
▲ Obtain parts from www.kawpowerepc.com
■ Not serviced separately

# Fuel Tank Assembly

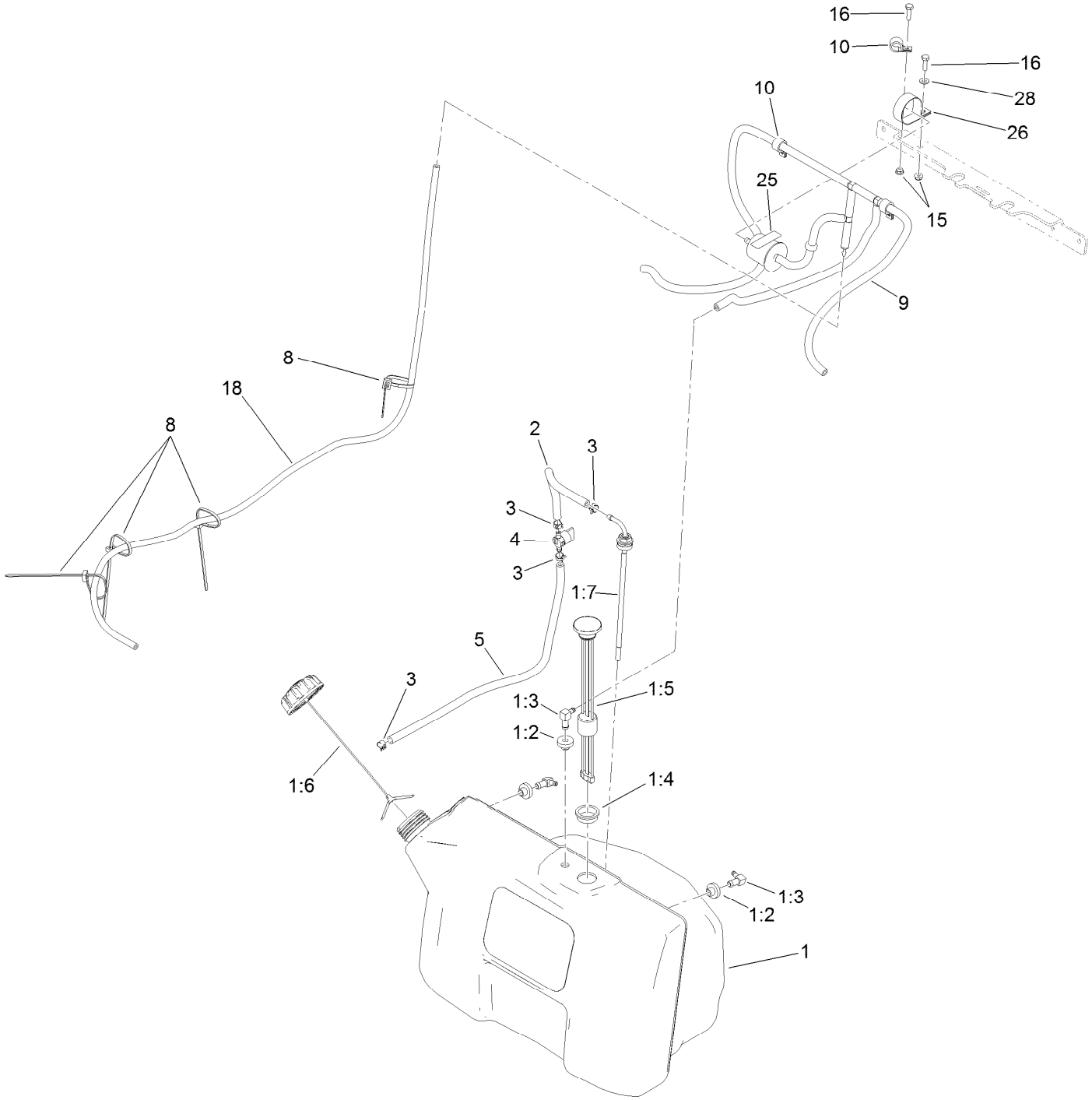

# Fuel Tank Assembly (continued)

| Ref. | Part Number | Qty. | Description |
|---|---|---|---|
| 1 | 119-7340 | 1 | Tank ASM |
| 1:2 | 46-6560 | 3 | Bushing |
| 1:3 | 1-643172 | 3 | Elbow-90 DEG |
| 1:4 | 95-8972 | 1 | Grommet |
| 1:5 | 117-9719 | 1 | Guage-Fuel |
| 1:6 | 126-1789 | 1 | Cap-Fuel, Ratcheting |
| 1:7 | 116-3408 | 1 | Fitting-Fuel, Bulkhead |
| 2 | 109-0297 | 1 | Hose-Fuel |
| 3 | 2412-98 | 4 | Clamp-Hose |
| 4 | 1-603770 | 1 | Valve-Fuel |
| 5 | 109-0301 | 1 | Hose-Fuel |
| 8 | 3290-378 | 4 | Tie-Cable |
| 9 | | 1 | Vent Hose ASM ● |
| 10 | 2412-87 | 3 | Clamp-Cable |
| 15 | 104-7201 | 2 | Nut-HF |
| 16 | 321-5 | 2 | Screw-HH |
| 18 | 110-4102 | 1 | Hose-Fuel |
| 25 | 116-4769 | 1 | Decal-Filter, Emissions |
| 26 | 2412-96 | 1 | Clamp-R |
| 28 | 3256-22 | 1 | Washer-Flat |

● Not serviced separately

# Vent Hose Assembly

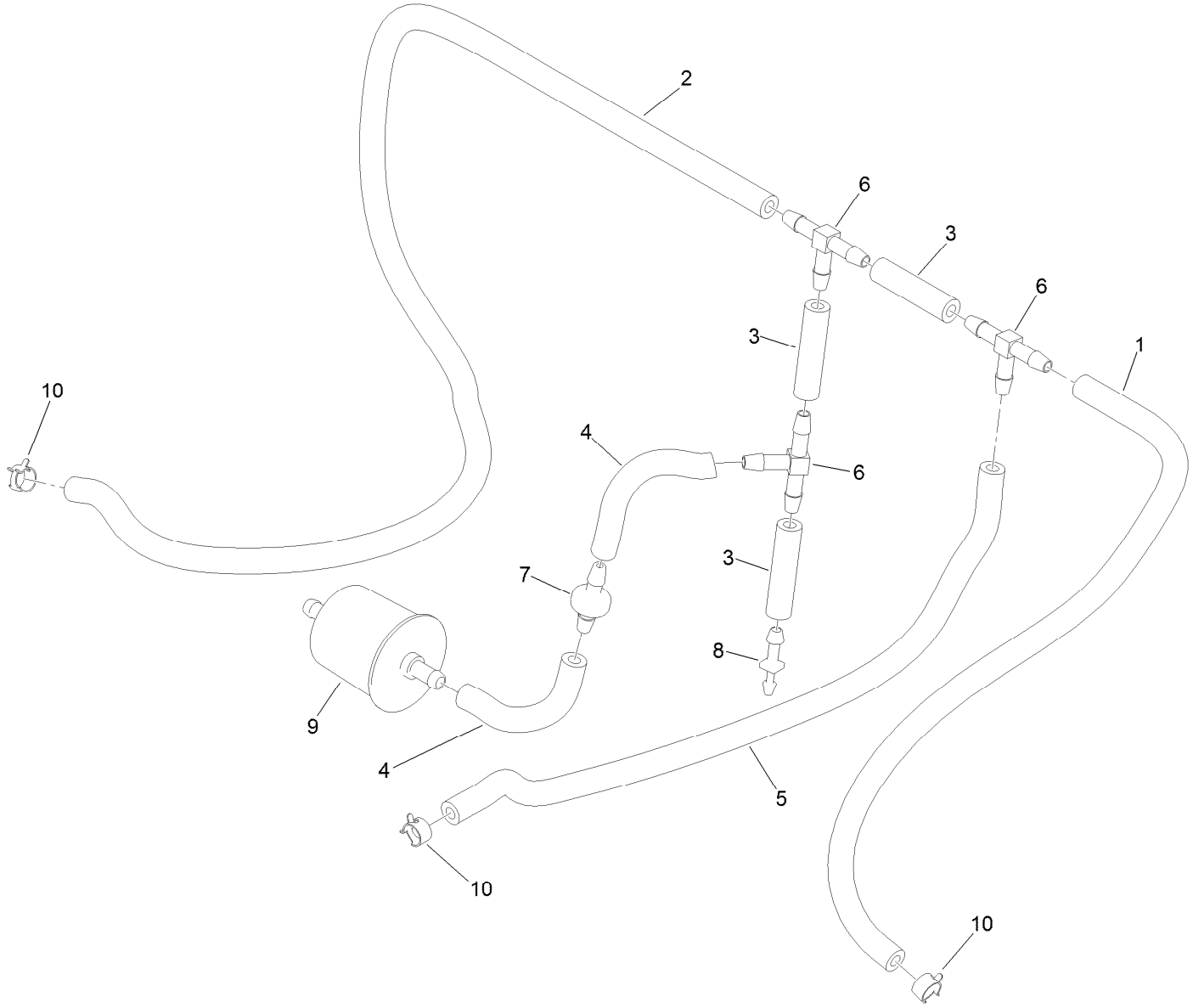

# Vent Hose Assembly (continued)

| Ref. | Part Number | Qty. | Description |
|---|---|---|---|
| 1 | 110-5701 | 1 | Hose-Fuel |
| 2 | 110-5702 | 1 | Hose-Fuel |
| 3 | 99-9415 | 3 | Hose-Fuel |
| 4 | 109-0650 | 2 | Hose-Fuel |
| 5 | 109-0296 | 1 | Hose-Fuel |
| 6 | 99-5005 | 3 | Fitting-Tee, Barbed |
| 7 | 99-5000 | 1 | Valve-Check, Fuel |
| 8 | 106-8150 | 1 | Fitting-Straight |
| 9 | 120-2235 | 1 | Filter-Fuel |
| 10 | 2412-98 | 3 | Clamp-Hose |

# Electrical Assembly

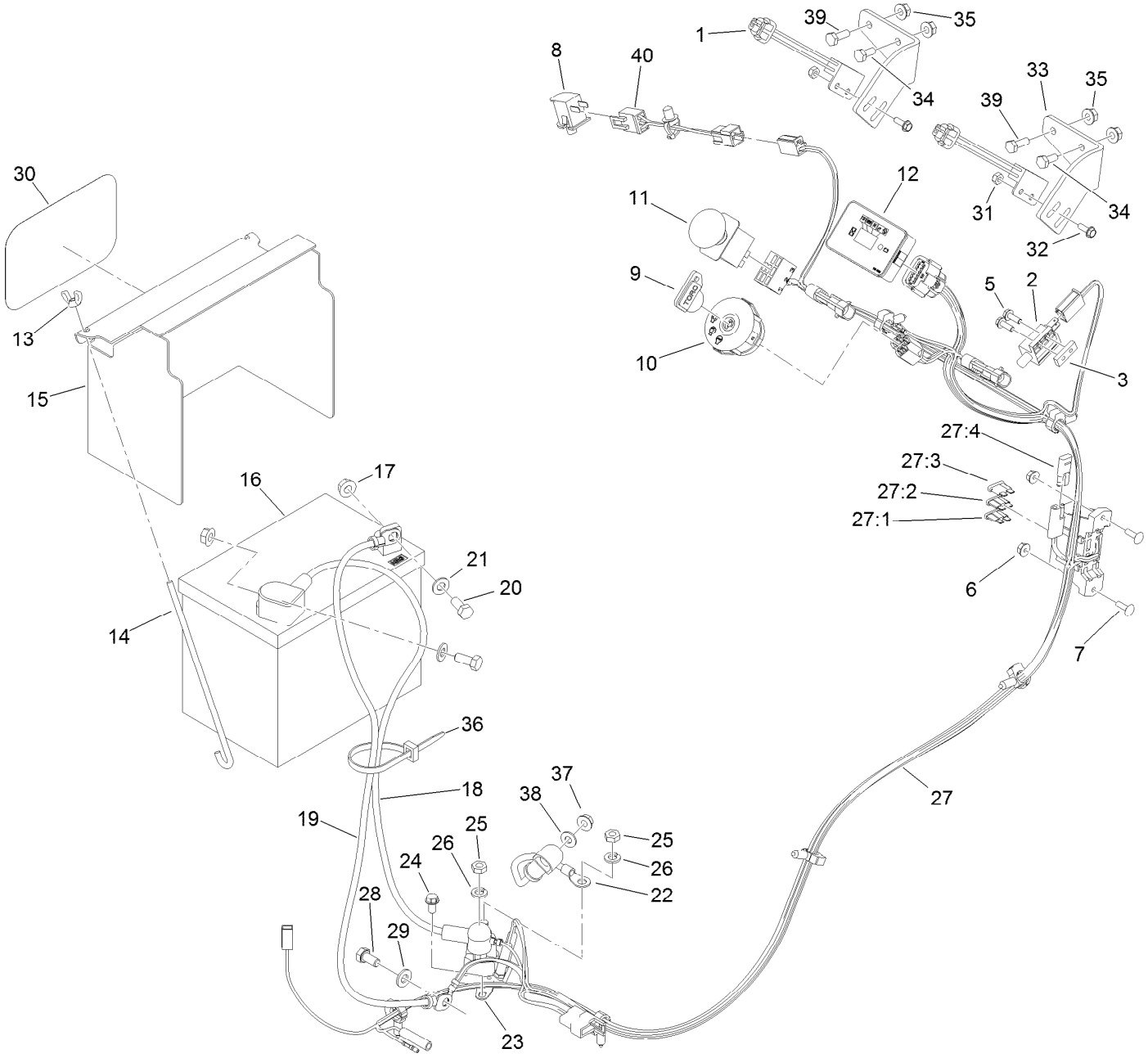

# Electrical Assembly (continued)

| Ref. | Part Number | Qty. | Description |
|---|---|---|---|
| 1 | 105-0023 | 2 | Switch-Proximity |
| 2 | 1-513152 | 1 | Switch-Closed, Normally |
| 3 | 1-633181 | 1 | Plate-Tapped |
| 5 | 32105-2 | 2 | Screw-SHWH |
| 6 | 32128-17 | 2 | Nut-Lock, Flange |
| 7 | 1-807533 | 2 | Bolt-CARR |
| 8 | 82-2190 | 1 | Switch-Bail |
| 9 | 63-8360 | 1 | Key-Ignition |
| 10 | 117-2222 | 1 | Switch-Ignition |
| 11 | 114-0279 | 1 | Switch-PTO, On-On |
| 12 | 117-3886 | 1 | Module-Hour Meter |
| 13 | 1-543792 | 2 | Wingnut |
| 14 | 1-633651 | 2 | Bolt-Holddown |
| 15 | 117-0543-01 | 1 | Cover-Battery |
| 16 | 104-8162 | 1 | Battery-Dry |
| 17 | 109-5715 | 2 | Nut-HHF, Smooth |
| 18 | 120-6442 | 1 | Cable-Battery, Positive |
| 19 | 103-0705 | 1 | Cable-Ground, Negative |
| 20 | 322-3 | 2 | Screw-HH |
| 21 | 3256-23 | 2 | Washer-Plain |
| 22 | 106-8268 | 1 | Cable-Battery, Red |
| 23 | 117-1197 | 1 | Solenoid |

| Ref. | Part Number | Qty. | Description |
|---|---|---|---|
| 24 | 32144-4 | 2 | Screw-HWH |
| 25 | 3220-2 | 2 | Nut-Jam |
| 26 | 3253-4 | 2 | Washer-Lock |
| 27 | 119-0181 | 1 | Harness-Wire |
| 27:1 | 109103 | 1 | Fuse-Blade, 30 Amp |
| 27:2 | 109102 | 1 | Fuse-Blade, 25 Amp |
| 27:3 | 218-578 | 1 | Fuse-Blade, 10 Amp |
| 27:4 | 116-0053 | 1 | Cap-Plug |
| 28 | 33114-016 | 1 | Screw-HH |
| 29 | 33094-00 | 1 | Washer-Plain |
| 30 | 68-3640 | 1 | Decal |
| 31 | 3296-2 | 4 | Nut-Lock, NI |
| 32 | 32105-23 | 4 | Screw |
| 33 | 119-8503-01 | 2 | Bracket-Mount, Switch |
| 34 | 321-3 | 2 | Screw-HH |
| 35 | 32128-32 | 4 | Nut-HHF |
| 36 | 3290-378 | 1 | Tie-Cable |
| 37 | 32128-33 | 1 | Nut-HF |
| 38 | 3256-22 | 1 | Washer-Flat |
| 39 | 321-4 | 2 | Screw-HH |
| 40 | 130-1779 | 1 | Harness-Wire, Jumper (OPC) |

# Deck Assembly

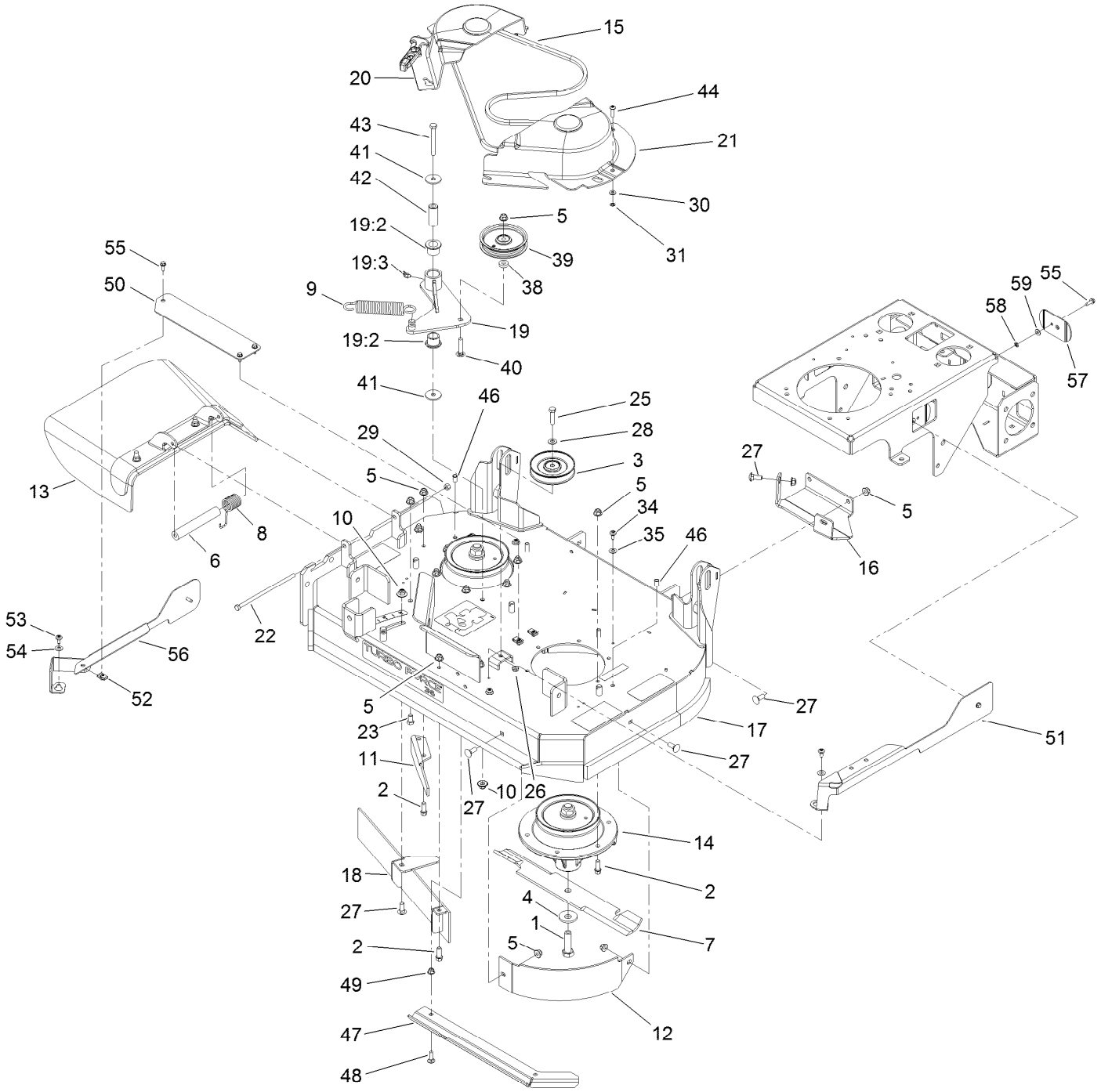

# Deck Assembly (continued)

| Ref. | Part Number | Qty. | Description |
|---|---|---|---|
| 1 | 51-4060 | 2 | Screw-Blade |
| 2 | 92-1624 | 15 | Screw-HWH |
| 3 | 92-7099 | 1 | Pulley-Idler |
| 4 | 103-0865 | 2 | Washer-Blade Bolt, Heavy |
| 5 | 104-8301 | 25 | Nut-HF, NI |
| 6 | 105-4622 | 1 | Spacer |
| 7 | 105-7781-03 | 2 | Blade-18In, Hi Flow |
| 8 | 108-4052 | 1 | Spring-Torsion |
| 9 | 119-0394 | 1 | Spring-Extension |
| 10 | 109-6658 | 2 | Nut-Flange, NI |
| 11 | 110-0754-01 | 1 | Baffle-Discharge |
| 12 | 110-6903-03 | 1 | Baffle-Front, LH |
| 13 | 119-2347 | 1 | Deflector ASM |
| 14 | 117-7638 | 2 | Spindle ASM |
| 15 | 117-7641 | 1 | Belt-V |
| 16 | 117-7687-01 | 1 | Plate-Skid |
| 17 | 121-6015 | 1 | Deck And Decal ASM |
| 18 | 119-0153-03 | 1 | Front Baffle ASM |
| 19 | 119-0180 | 1 | Idler Arm ASM |
| 19:2 | 33-3090 | 2 | Bushing |
| 19:3 | 302-11 | 1 | Fitting-Lube, 45 DEG |
| 20 | 119-1802 | 1 | Cover-Belt, RH |
| 21 | 119-1803 | 1 | Cover-Belt, LH |
| 22 | 322-50 | 1 | Screw-HH |
| 23 | 323-4 | 2 | Screw-HH |
| 25 | 323-8 | 1 | Screw-HH |
| 26 | 3296-59 | 1 | Nut-Lock, NI |
| 27 | 3231-2 | 7 | Bolt-CARR |
| 28 | 3256-24 | 1 | Washer-Flat |
| 29 | 3296-29 | 1 | Nut-Lock, NI |
| 30 | 3256-22 | 2 | Washer-Flat |
| 31 | 106-8737 | 2 | Nut-Retainer |
| 34 | 120-7950 | 4 | Screw-Shoulder |
| 35 | 73-0041 | 4 | Washer-Thrust |
| 38 | 5-0652 | 1 | Spacer |
| 39 | 93-1622 | 1 | Pulley-Idler |
| 40 | 3231-5 | 1 | Screw-CARR |
| 41 | 1-213069 | 2 | Washer |
| 42 | 119-0208 | 1 | Spacer-Plain |
| 43 | 323-20 | 1 | Screw-HH |
| 44 | 32105-32 | 2 | Screw-TTH |
| 46 | 32148-6 | 2 | Nut-Clinch |
| 47 | 119-7839-01 | 1 | Extender-Deck |
| 48 | 3230-2 | 2 | Bolt-CARR |
| 49 | 104-8300 | 2 | Nut-HF, NI |
| 50 | 131-1506-01 | 1 | Guard-Deck, Center |
| 51 | 131-1497-01 | 1 | Guard-Deck, LH |
| 52 | 107069 | 3 | Clip |
| 53 | 120-7950 | 2 | Screw-Shoulder |
| 54 | 73-0041 | 2 | Washer-Thrust |
| 55 | 32144-44 | 6 | Screw-HWH, Thread Roll |
| 56 | 131-1498-01 | 1 | Guard-Deck, RH |
| 57 | 131-1495-01 | 4 | Guard-Plate |
| 58 | 106-8737 | 6 | Nut-Retainer |
| 59 | 119-8952 | 6 | Washer |

# Deflector Assembly No. 119-2347

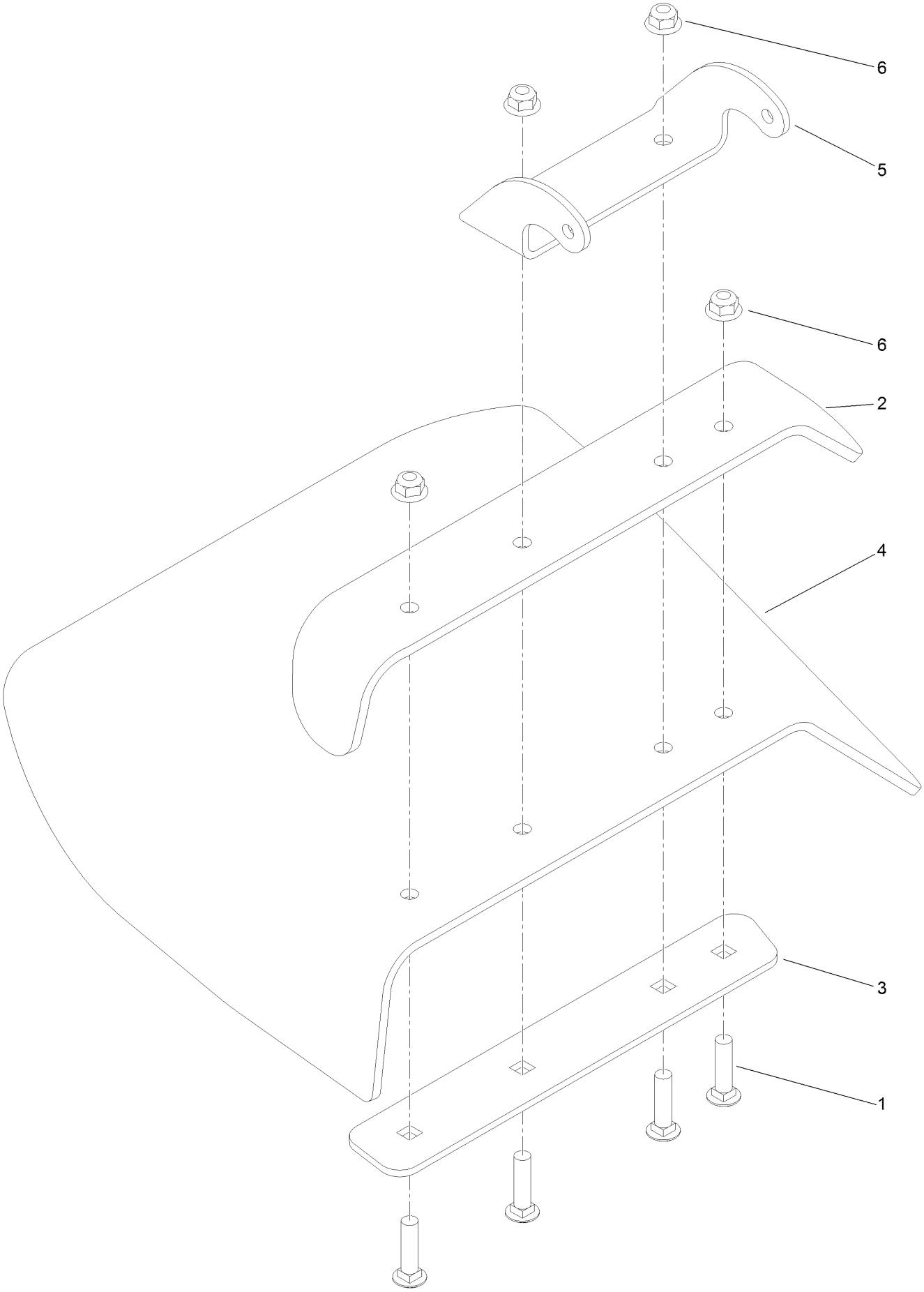

# Deflector Assembly No. 119-2347 (continued)

| Ref. | Part Number | Qty. | Description |
|---|---|---|---|
| 1 | 3231-4 | 4 | Screw-CARR |
| 2 | 110-0792-01 | 1 | Deflector |
| 3 | 110-0793-03 | 1 | Strap-Discharge |
| 4 | 119-2346 | 1 | Deflector-Rubber |
| 5 | 110-9923-01 | 1 | Bracket-Mounting, Deflector |
| 6 | 104-8301 | 4 | Nut-HF, NI |

# Spindle Assembly No. 117-7638

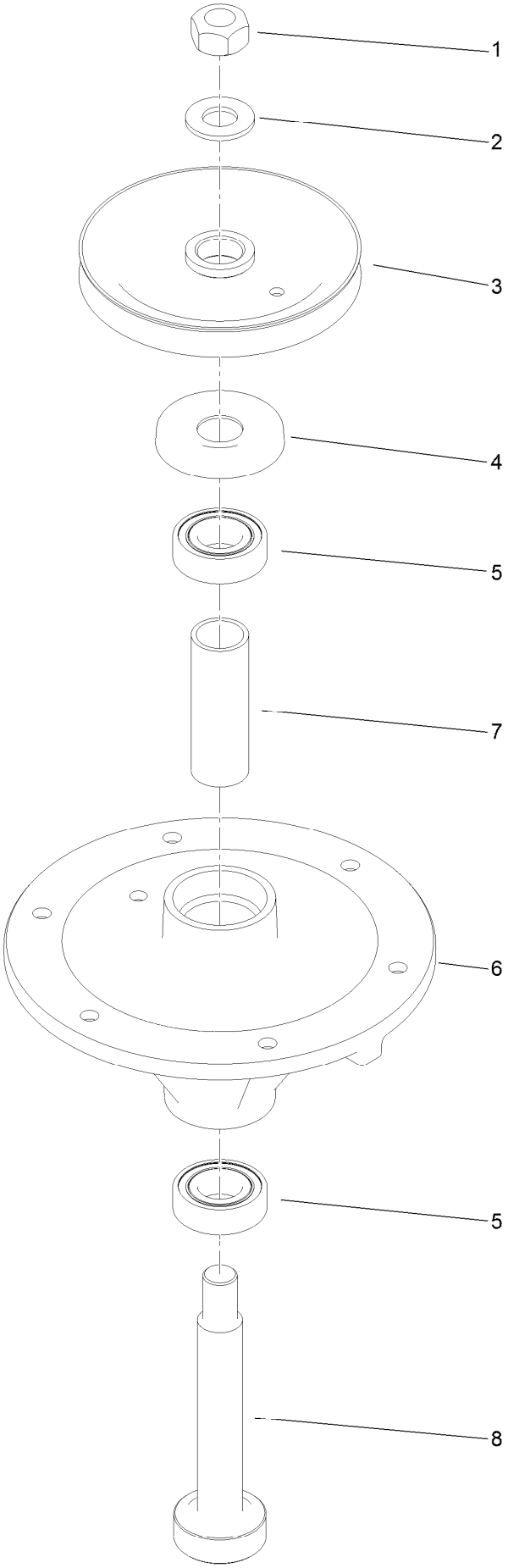

# Spindle Assembly No. 117-7638 (continued)

| Ref. | Part Number | Qty. | Description |
|---|---|---|---|
| 1 | 3219-7 | 1 | Nut-Hex |
| 2 | 7-4150 | 1 | Washer |
| 3 | 117-7614 | 1 | Pulley |
| 4 | 106-0873 | 1 | Shield-Bearing |
| 5 | 116-0720 | 2 | Bearing-Ball |
| 6 | 108-6696 | 1 | Housing-Spindle |
| 7 | 110-0727 | 1 | Spacer-Bearing |
| 8 | 110-0726 | 1 | Shaft-Spindle |

# Deck Decal Assembly No. 121-6015

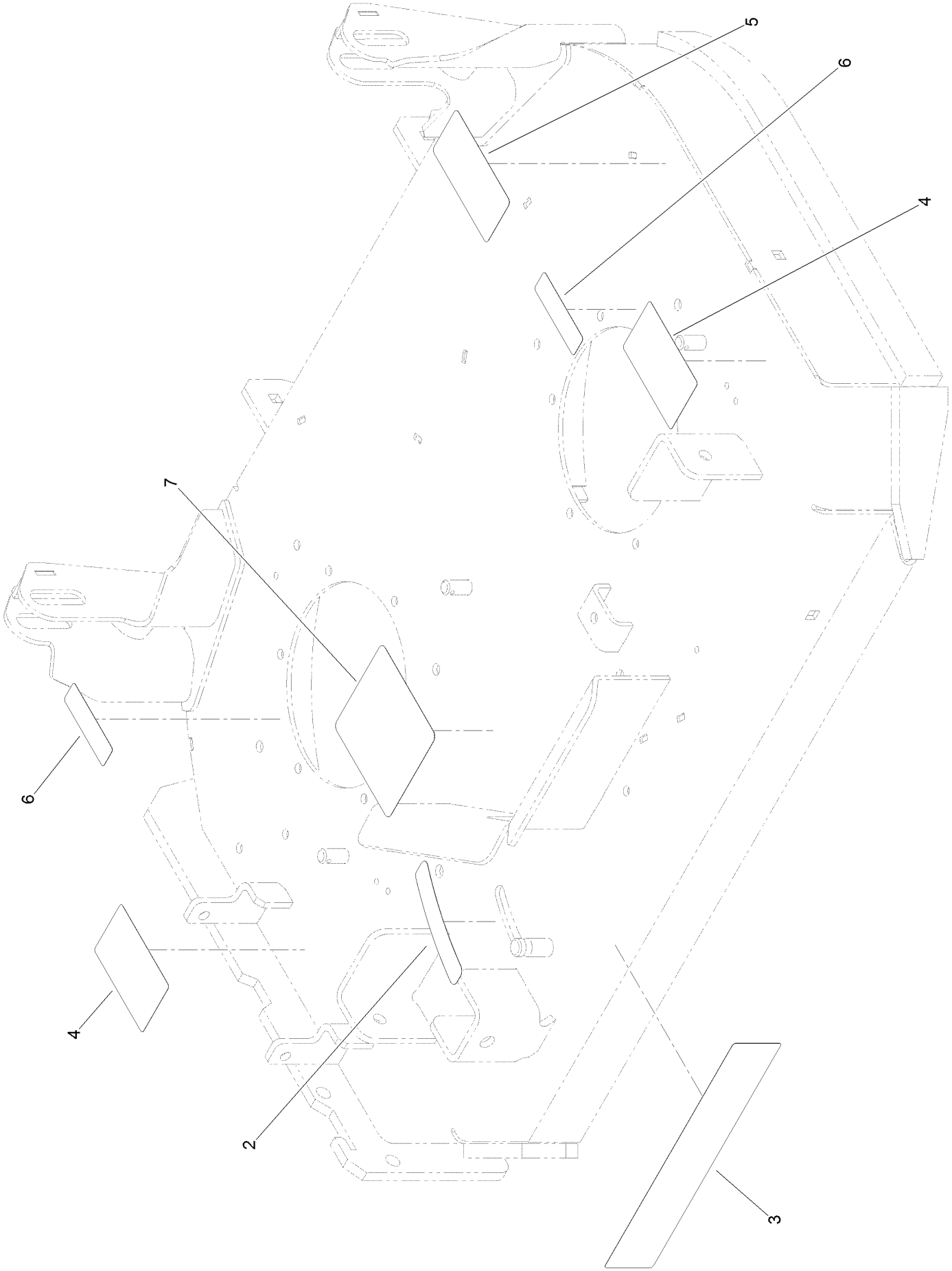

# Deck Decal Assembly No. 121-6015 (continued)

| Ref. | Part Number | Qty. | Description |
|---|---|---|---|
| 2 | 110-2067 | 1 | Decal-Setting, Baffle |
| 3 | 119-0197 | 1 | Decal |
| 4 | 121-6049 | 2 | Decal-Danger |
| 5 | 93-7818 | 1 | Decal-Torque, Blade Bolt |
| 6 | 119-0217 | 2 | Decal-Danger |
| 7 | 119-0186 | 1 | Decal-Routing, Belt |

# Attachments and Accessories

## For 74534TE GrandStand Mower With 91cm TURBO FORCE Cutting Unit

| Product Name | Model/Part |
|---|---|
| Blade-Hi Flow, 18in (6 Pack) | 108-1117 |
| Blade-Lo Flow, 18in (6 Pack) | 110-0406 |
| Blade-Recycler, 18in (6 Pack) | 110-0408 |
| Blade-Med Flow, 18in (6 Pack) | 110-0409 |
| 36in Recycler Kit | 110-2080 |
| Light Kit | 114-3505 |
| Hypr-Oil 500 (quart) | 114-4713 |
| Hypr-Oil 500 (gallon) | 114-4714 |
| Hypr-Oil 500-5 (5 gallon) | 114-4715 |
| Weight Kit | 117-3620 |
| Striping Kit | 117-8560 |
| Operator-Controlled Discharge Chute Kit with Bag | 117-8565 |
| Oil Filter | 119-5852 |
| Filter-Fuel | 120-2235 |
| Element-Filter, Air | 120-7447 |
| Bagger Adaptor Kit | 121-7515 |
| Trash Bag Kit | 121-7530 |
| Soft Bag (3 Bushel) | 30104 |
| Spark Plug | 92-2153 |
| Spark Arrestor | 98-9099 |

**Notes:**

TORO®

Count on it.