Form No. 3412-592 Rev B

TORO®

Count on it.

Parts Catalog

GrandStand® Mower

With 91cm TURBO FORCE® Cutting Unit

Model No. 74534TE—Serial No. 400000000 and Up

Register at www.Toro.com.
Original Instructions (EN)

CE

3412-592 B

Ordering Replacement Parts

To order replacement parts, please supply the part number, the quantity, and the description of each part desired.

Understanding Reference Numbers

Each identified part in an illustration has a reference number. The reference number for a part also appears in the parts list, along with other information about the part.

This catalog uses two special reference number formats, one to indicate parts in a service assembly and another to indicate the quantity of a given part in an illustration.

Service Assembly Reference Numbers

Parts in service assemblies have reference numbers in the form a:b. The a represents the reference number of the entire service assembly and the b represents a sequential number unique to each part within the service assembly.

For example, a wheel assembly might be identified by reference number 6, the tire by 6:1, the valve by 6:2, and the wheel by 6:3. When you order the assembly identified by reference number 6, you receive all parts identified by reference numbers 6:1,6:2, and 6:3. However, you may also order any part individually. Reference numbers of this type appear in illustration and in parts lists.

Reference Numbers Indicating Quantity

In an illustration, if a reference number indicates more than one part, the reference number has the form nX y. The n represents the quantity of the part, the X is the multiplication symbol, and the y represents the reference number.

For example, in an illustration, the reference number 2X 37 means that two of the parts identified by reference number 37 are indicated.

Contents

Main Frame Assembly 4
Wheel and Bearing Assembly No. 112-3810 6
Parking Brake Assembly 8
Height-of-Cut Plate Assembly 10
Deck Lift Assembly 12
Deck Lift Spring Assembly No. 119-2337 14
Cushion and Platform Assembly 16
Cushion Assembly No. 130-1767 18
Platform Assembly No. 132-9402 20
Traction Drive Assembly 22
Hydraulic Motor Assembly 104-1171 24
Pump Idler Assembly No. 117-7685 26
Motion Control Assembly 28
Engine Assembly 30
Fuel Tank Assembly 32
Vent Hose Assembly 34
Electrical Assembly 36
Deck Assembly 38
Deflector Assembly No. 119-2347 40
Spindle Assembly No. 117-7638 42
Deck Decal Assembly No. 121-6015 44
Attachments and Accessories 46

© 2018—The Toro® Company
8111 Lyndale Avenue South
Bloomington, MN 55420

Contact us at www.Toro.com.
Printed in the USA.
All Rights Reserved

Main Frame Assembly

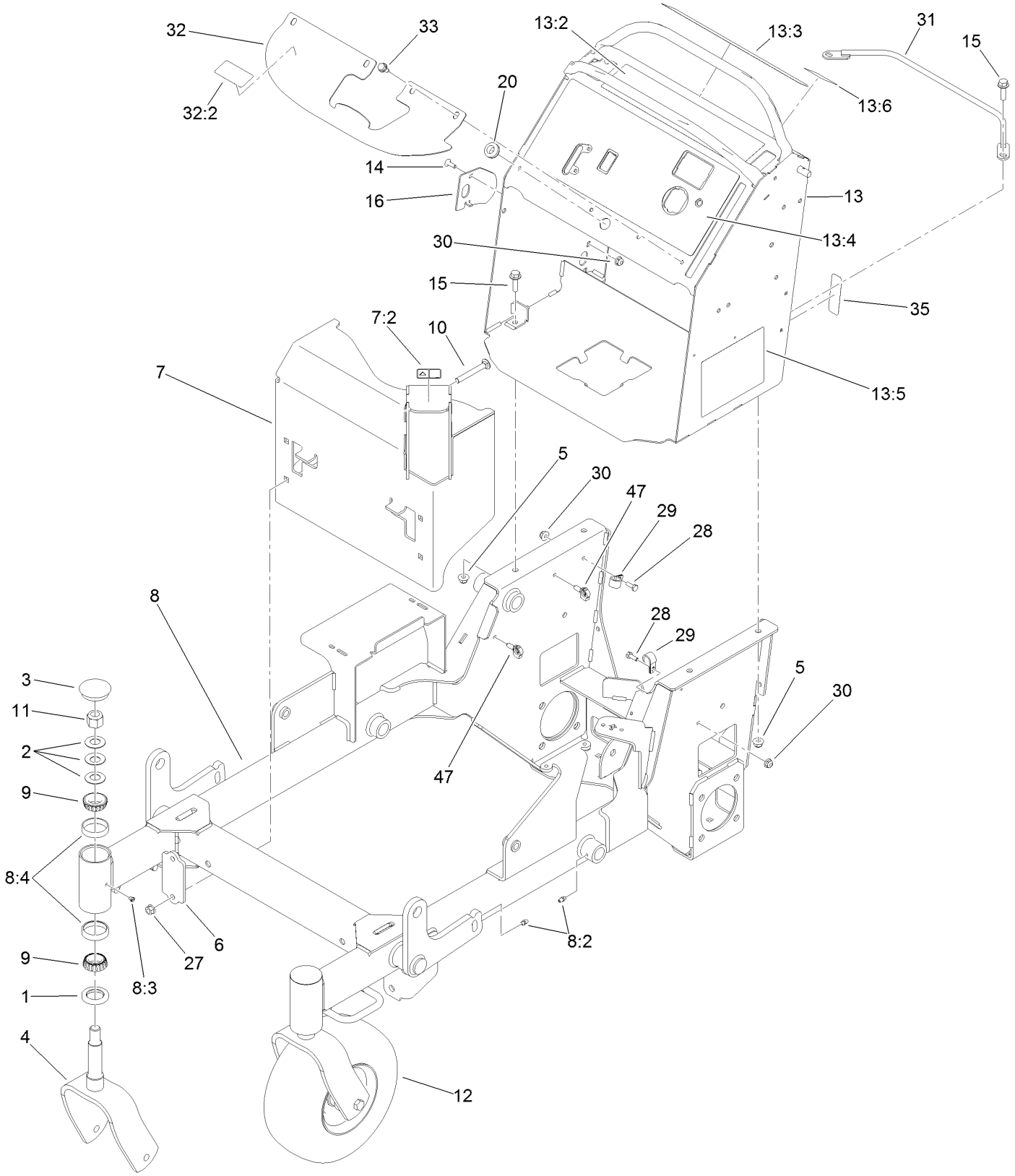

Main Frame Assembly (continued)

Ref.	Part Number	Qty.	Description
1	116-5647	2	Seal-Grease
2	1-633508	6	Washer-Bellville
3	103-4882	2	Cap-Grease
4	121-7988-01	2	Fork-Caster
5	104-8301	4	Nut-HF, NI
6	119-7303-01	2	Bracket-Mounting, Guard
7	116-8739	1	Muffler Guard ASM
7:2	106-5517	1	Decal-Warning
8	125-4650	1	Frame ASM
8:2	302-5	7	Fitting-Grease
8:3	1-811010	2	Plug
8:4	1-543508	4	Cup-Bearing
9	1-543509	4	Bearing-Roller, Tapered
10	3231-10	4	Screw-CARR
11	3296-51	2	Nut-Lock, NI
12	112-3810	2	Wheel/Tire And Bearing ASM
13	125-4676	1	Control Tower ASM
13:2	117-0454	1	Decal-OPC
13:3	117-3626	1	Decal-Warning
13:4	125-4679	1	Decal-Panel, Control
13:5	119-0241	1	Decal-Service Aid
13:6	120-6447	1	Decal-Stability, CE
14	1-807512	1	Bolt-CARR
15	119-4061	4	Screw-HHF
16	119-7312	1	Plate-Striker
20	112-7069	1	Grommet
27	32128-21	4	Nut-HF
28	321-4	2	Screw-HH
29	2412-87	2	Clamp-Cable
30	104-7201	3	Nut-HF
31	119-1878-03	1	Retainer-Cable
32	119-0239	1	Cover-Tank
32:2	116-8775	1	Decal-Fill, Fuel
33	32144-70	4	Screw-HWHTF
35	116-8772	1	Decal-Fuse
47	32180-040	2	Clip-Harness

Wheel and Bearing Assembly No. 112-3810

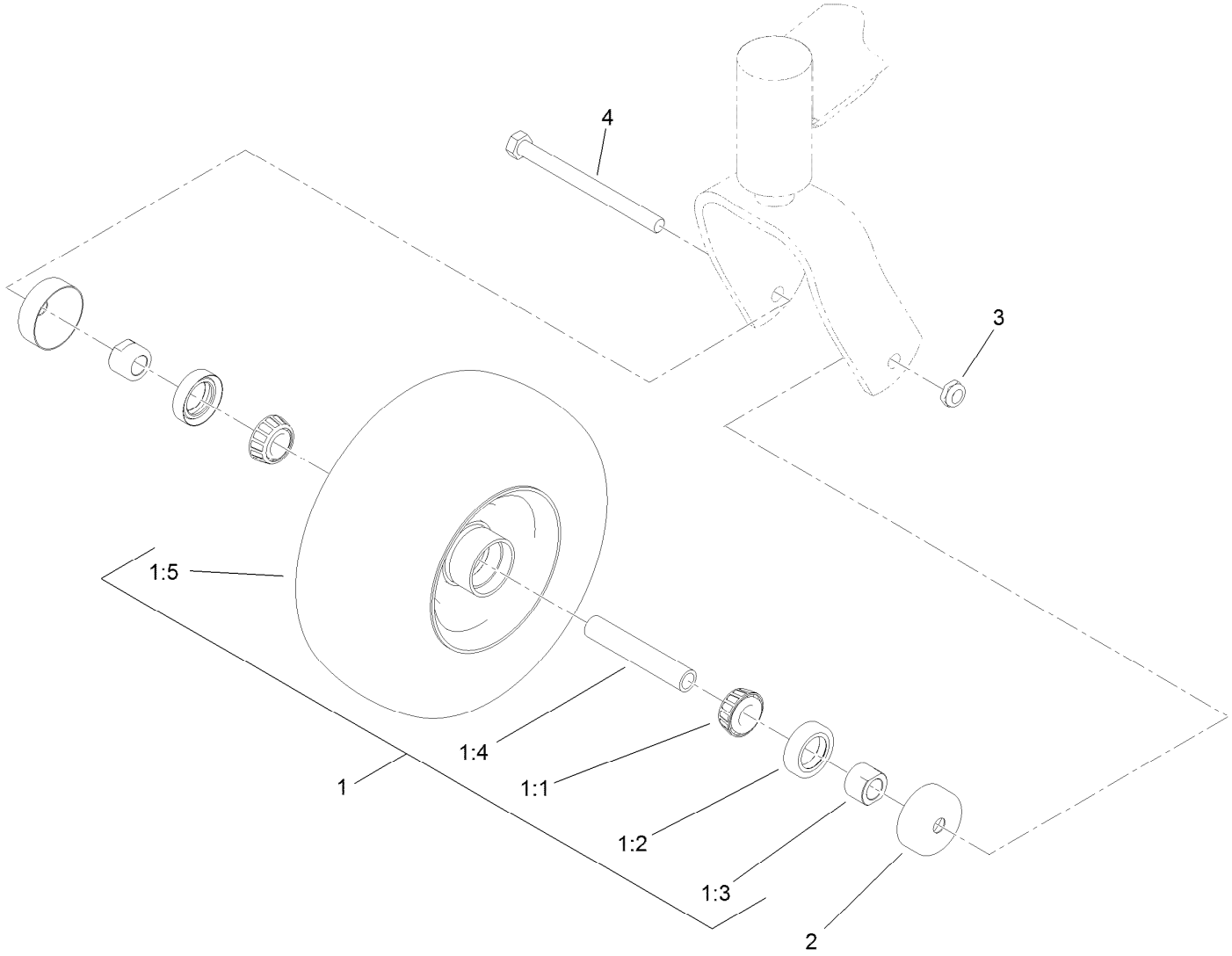

Wheel and Bearing Assembly No. 112-3810 (continued)

Ref.	Part Number	Qty.	Description
1		1	Wheel And Bearing ASM ●
1:1	1-633585	2	Bearing-Cone, Taper
1:2	103-0063	2	Seal-Caster
1:3	103-3051	1	Spacer-Nut ■
1:4	126-5359	1	Caster Axle ASM
1:5	110-9965	1	Wheel And Tire ASM
2	103-2768	2	Guard-Seal
3	3296-45	1	Nut-Hex
4	325-20	1	Screw-HH

● Not serviced separately
■ Use Pro-Lock, Nut Type (P/N 1-840022, .5ml tube) on spacer nut

Parking Brake Assembly

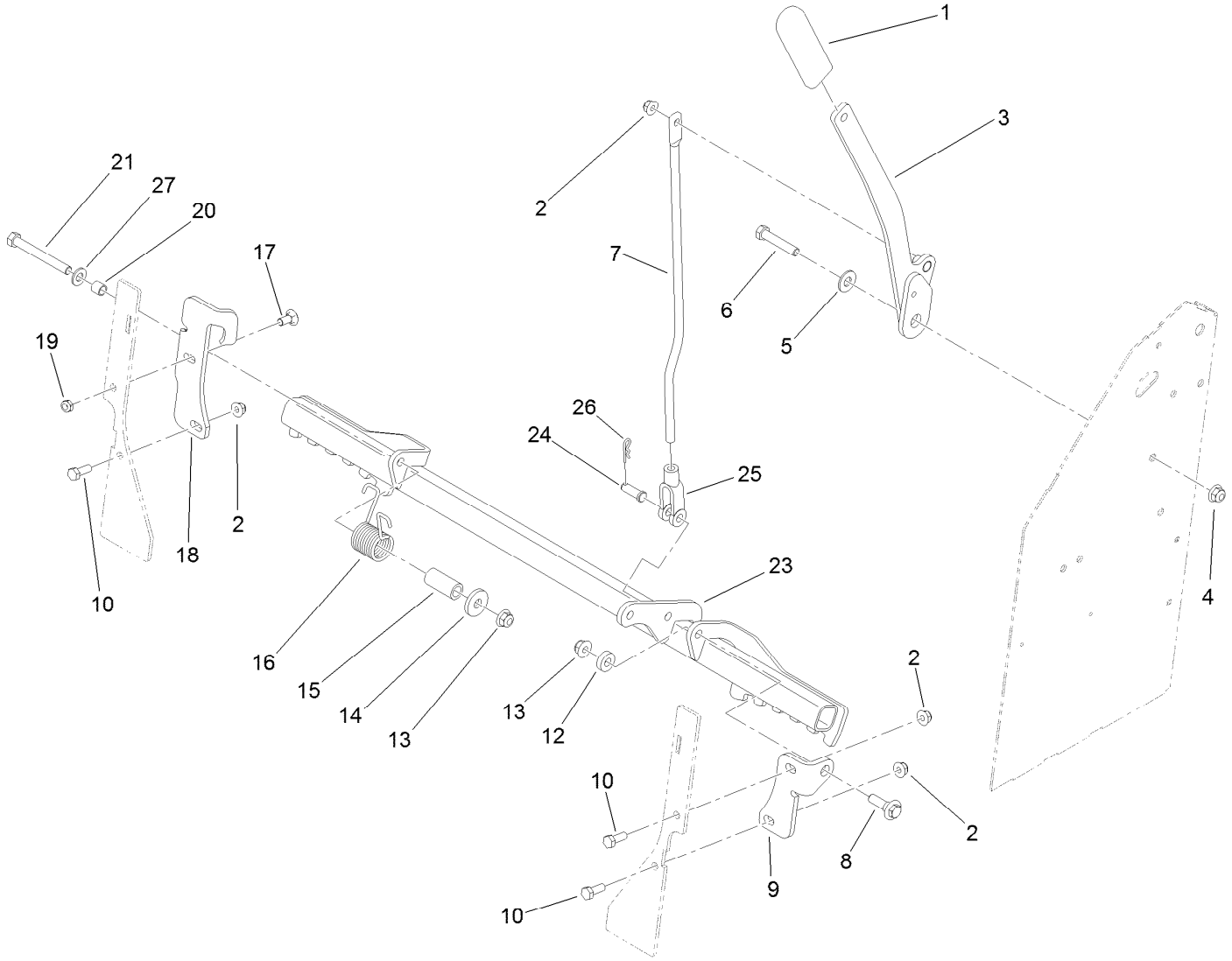

Parking Brake Assembly (continued)

Ref.	Part Number	Qty.	Description
1	1-633268	1	Grip-Lever
2	104-8300	4	Nut-HF, NI
3	119-1861-01	1	Handle-Brake
4	104-8301	1	Nut-HF, NI
5	3256-4	1	Washer-Flat
6	323-10	1	Screw-HH
7	117-6199	1	Rod-Link, Brake
8	614672	1	Screw-Shoulder, HWH
9	119-1860-01	1	Bracket-Brake Mount, LH
10	322-4	3	Screw-HH
12	5-0652	1	Spacer
13	104-8301	2	Nut-HF, NI
14	1-373034	1	Washer
15	117-9683	1	Spacer
16	108-4052	1	Spring-Torsion
17	3230-1	1	Bolt-CARR
18	125-4667-01	1	Bracket-Brake Mount, RH
19	3296-47	1	Nut-Lock, NI
20	117-9684	1	Spacer
21	323-20	1	Screw-HH
23	116-4600-03	1	Bar-Brake
24	283-2	1	Pin-Clevis
25	1-633131	1	Yoke-Linkage, Brake
26	3290-307	1	Pin-Cotter
27	3256-24	1	Washer-Flat

Height-of-Cut Plate Assembly

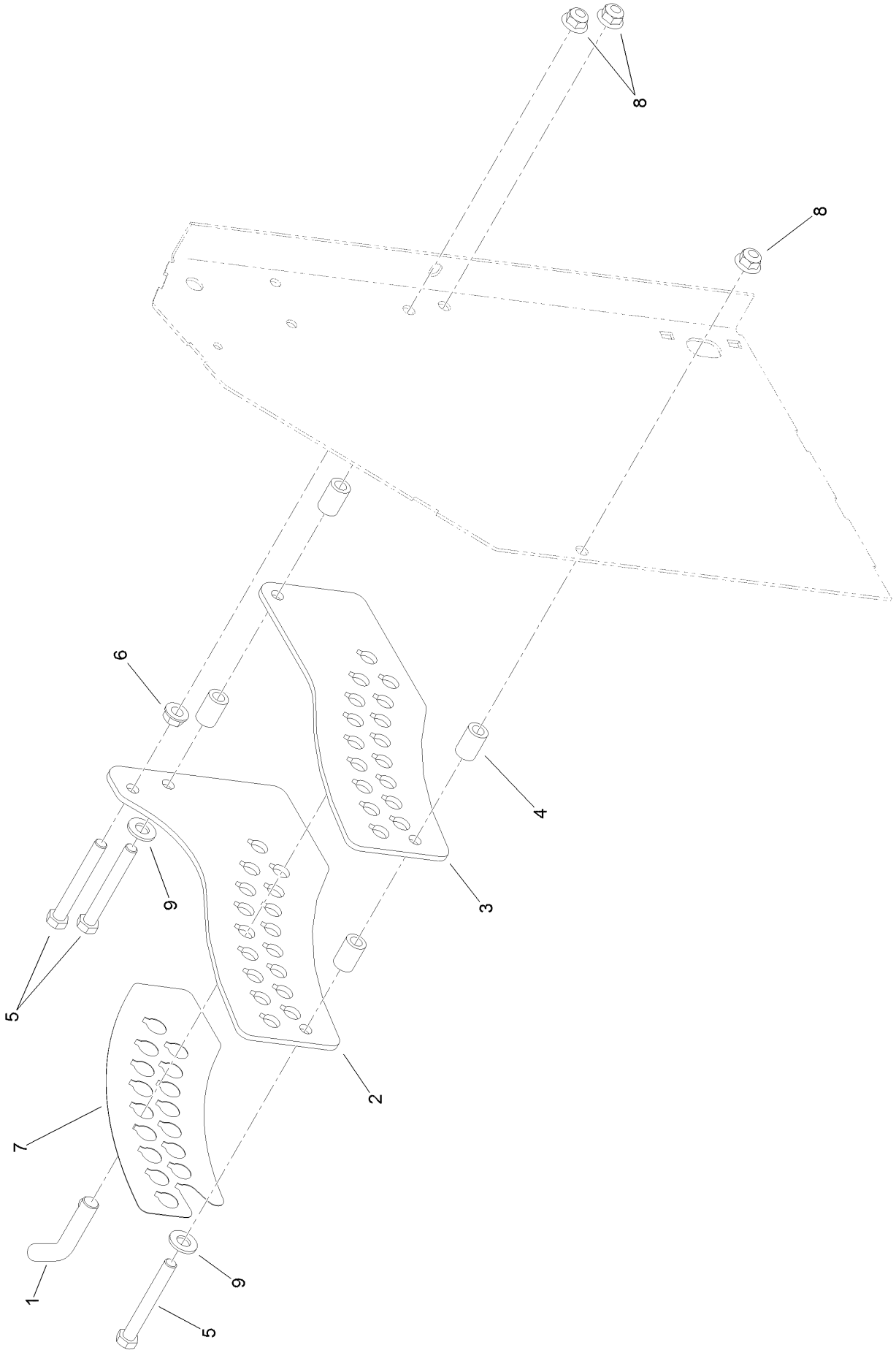

Height-of-Cut Plate Assembly (continued)

Ref.	Part Number	Qty.	Description
1	116-5584	1	Pin-HOC
2	117-5286-01	1	Plate-HOC, Outside
3	117-5287-01	1	Plate-HOC, Inside
4	114-2754	4	Spacer
5	323-14	3	Screw-HH
6	3290-357	1	Nut-HHF, Whiz
7	119-2317	1	Decal-HOC
8	104-8301	3	Nut-HF, NI
9	3256-24	2	Washer-Flat

Deck Lift Assembly

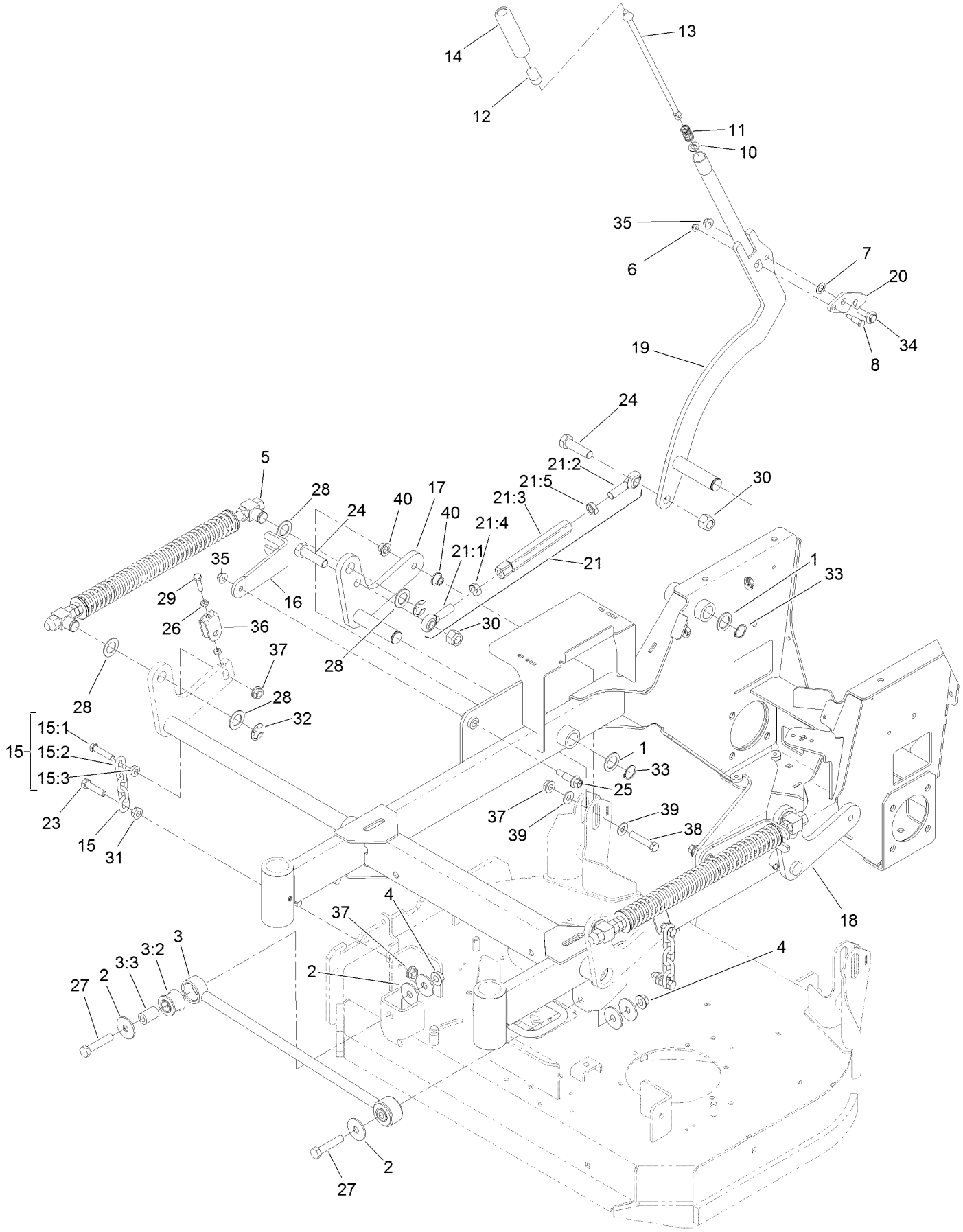

Deck Lift Assembly (continued)

Ref.	Part Number	Qty.	Description
1	1-523157	3	Washer-Spacer
2	86-1990	4	Washer-Thrust
3	109-5013	1	Panhard Rod ASM
3:2	109-5009	2	Bushing-Suspension, Rubber
3:3	109-5010	2	Spacer
4	32128-23	2	Nut-HF
5	119-2337	2	Deck Lift Spring ASM
6	104-7201	1	Nut-HF
7	98-1629	1	Washer
8	119-2309	1	Bolt-Shoulder
10	114-1207	1	Washer-Special
11	114-8187	1	Spring-Compression
12	115-2750	1	Knob
13	136-0530	1	Rod-Latch, Release
14	115-3592	1	Grip
15	116-0756	2	Deck Lift Chain ASM
15:1	1-633447	1	Chain-Lift, Deck
15:2	109-9065	1	Screw-HH
15:3	32128-37	1	Nut-HF
16	119-2302-01	2	Bracket-Fork
17	121-6014-01	1	Arm-Lift, RH
18	121-6013-01	1	Arm-Lift, LH
19	117-5290-01	1	Arm-Lift, HOC
20	117-5292	1	Latch-HOC
21	119-0383	1	Deck Lift Link ASM
21:1	1-633029	1	Balljoint-Spherical
21:2	117-5291	1	Balljoint-Spherical
21:3	119-0382	1	Link-Lift, Deck
21:4	3220-6	1	Nut-Jam
21:5	117-5293	1	Nut-Jam
23	324-7	2	Screw-HH
24	327-22	2	Screw-HH
25	62-1330	2	Bolt-Shoulder
26	3218-2	4	Nut-Jam
27	325-10	2	Screw-HH
28	119-2332	8	Washer-Flat
29	119-3626	2	Screw-HH
30	3296-53	2	Nut-Lock, NI
31	32128-37	2	Nut-HF
32	32151-103	4	Ring-Retaining, EXT
33	32151-29	3	Ring-Retaining
34	614672	1	Screw-Shoulder, HWH
35	104-8301	3	Nut-HF, NI
36	109-9066	2	Yoke-Adjust, Deck
37	32128-42	6	Nut-HF
38	324-9	2	Screw-HH
39	3256-4	4	Washer-Flat
40	116-2428	4	Bushing-Flanged

Deck Lift Spring Assembly No. 119-2337

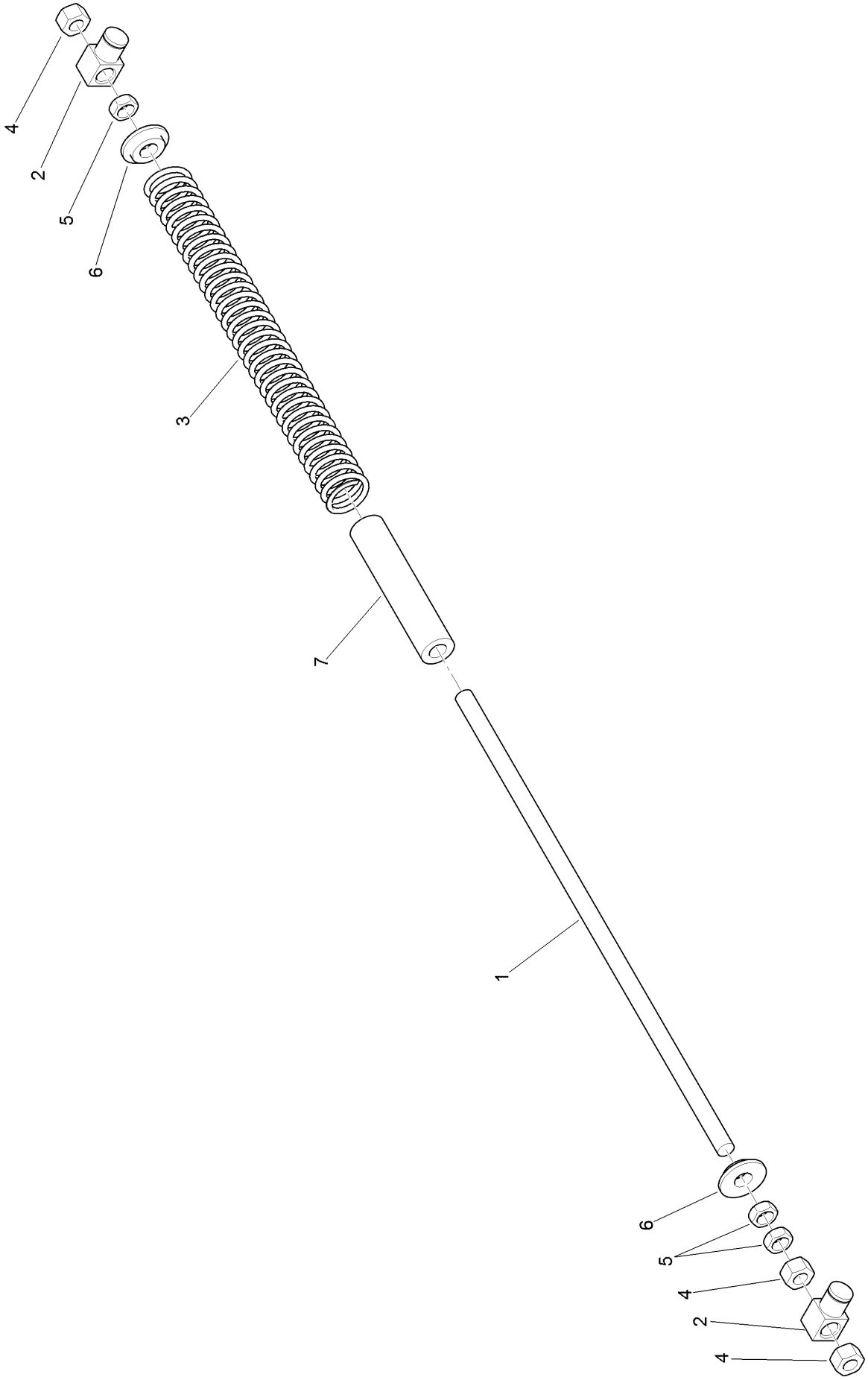

Deck Lift Spring Assembly No. 119-2337 (continued)

Ref.	Part Number	Qty.	Description
1	1-633096	1	Rod-Lift, Deck
2	1-633441	2	Swivel-Deck Mount, Rear
3	119-2327	1	Spring-Compression
4	3217-11	3	Nut-Hex
5	3218-6	3	Nut-Jam
6	119-2334	2	Washer-Step
7	119-2335	1	Tube-Guide, Spring

Cushion and Platform Assembly

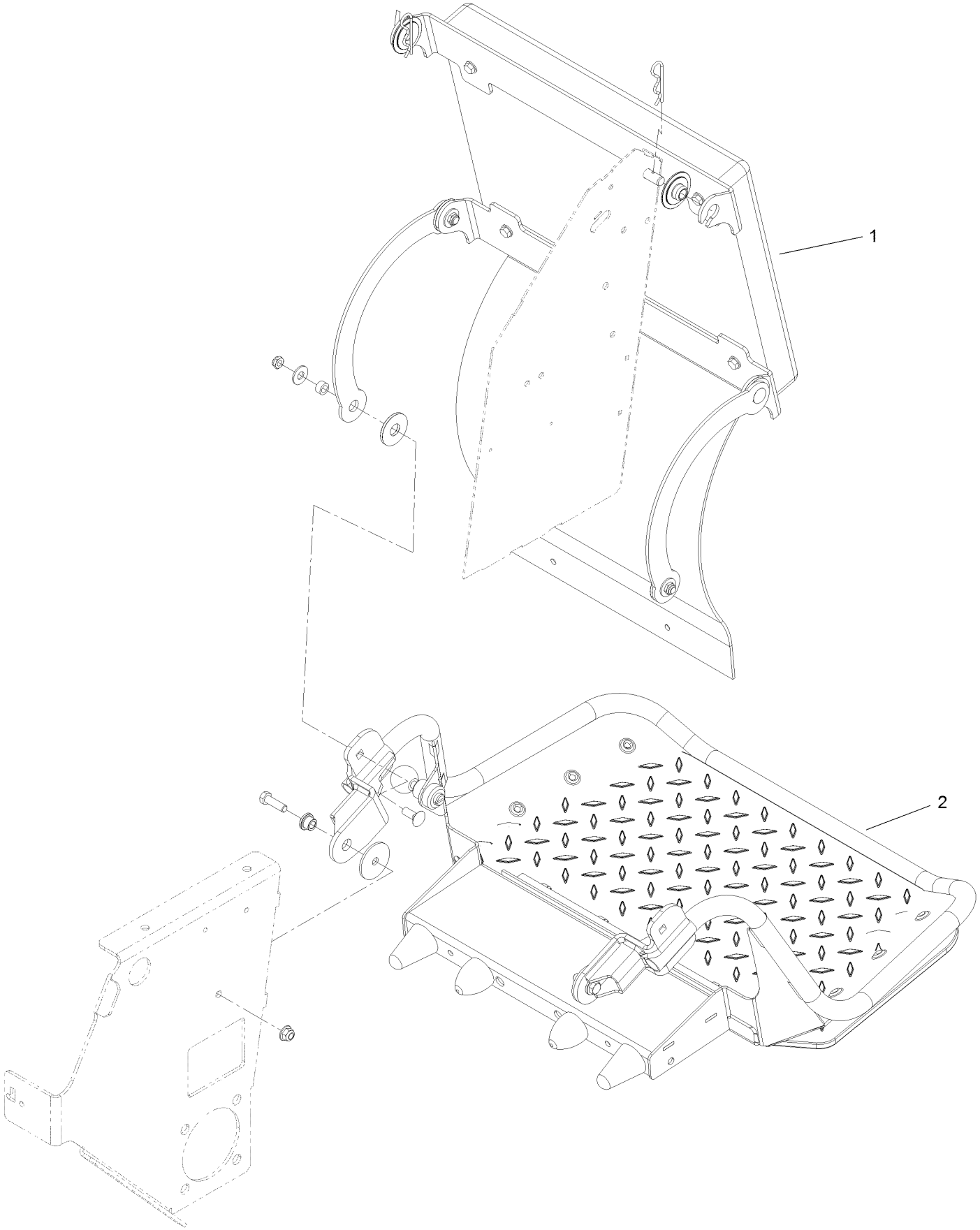

Cushion and Platform Assembly (continued)

Ref.	Part Number	Qty.	Description
1	130-1767	1	Cushion ASM
2	132-9402	1	Platform ASM

Cushion Assembly No. 130-1767

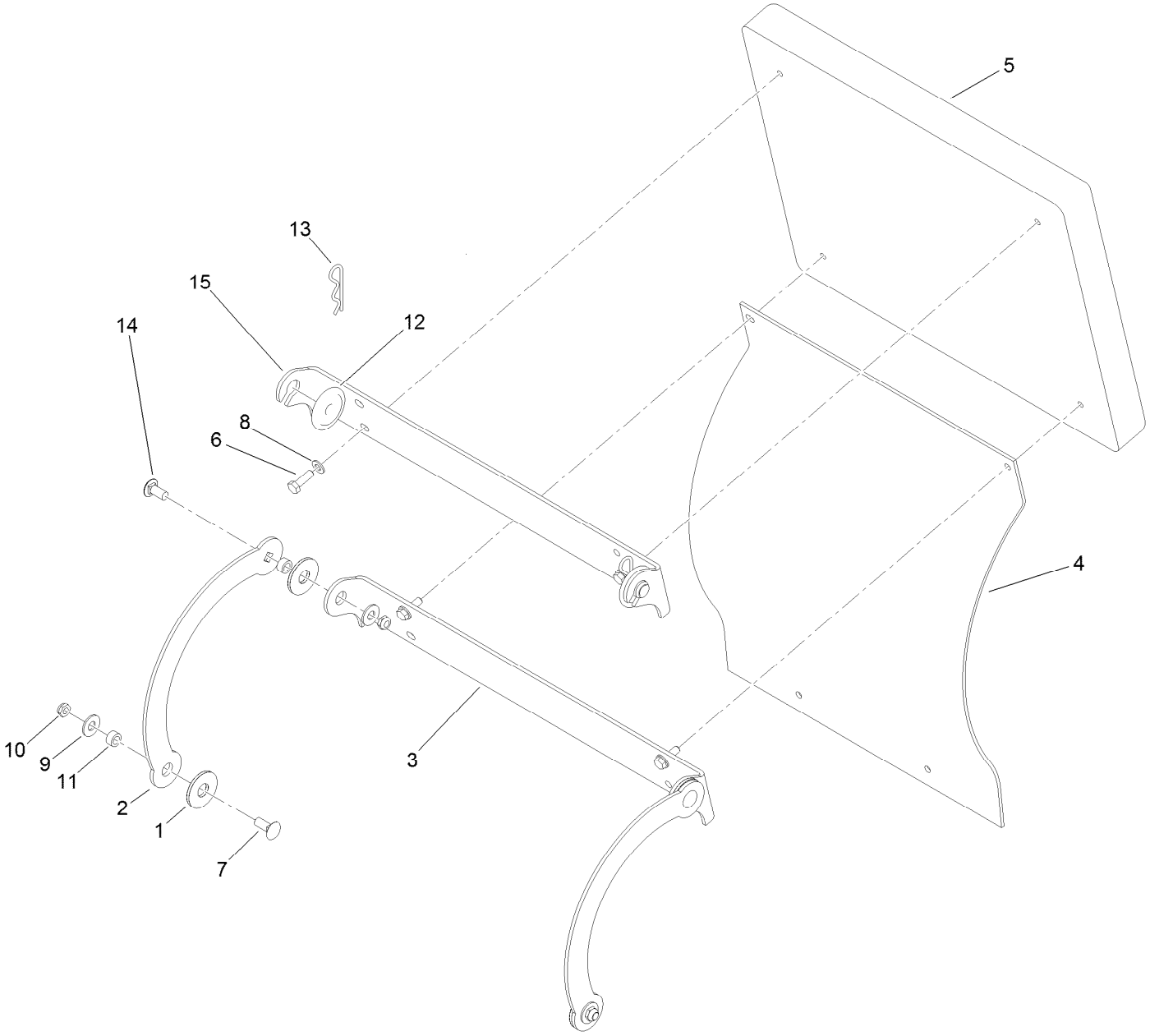

Cushion Assembly No. 130-1767 (continued)

Ref.	Part Number	Qty.	Description
1	114-0463	4	Washer-Friction, Composite
2	114-1915-01	2	Link-Pad
3	116-2061-03	1	Hinge-Pad
4	130-1769	1	Shield-Rear
5	117-9739	1	Pad-Cushion
6	121-7999	4	Screw-HH
7	3231-2	2	Bolt-CARR
8	3256-23	4	Washer-Plain
9	3256-4	4	Washer-Flat
10	3296-59	4	Nut-Lock, NI
11	111044	4	Spacer
12	116-2886	2	Slide-Bushing
13	3290-355	2	Pin-Hair
14	3231-27	2	Screw-CARR
15	116-2757-03	1	Hinge-Pad

Platform Assembly No. 132-9402

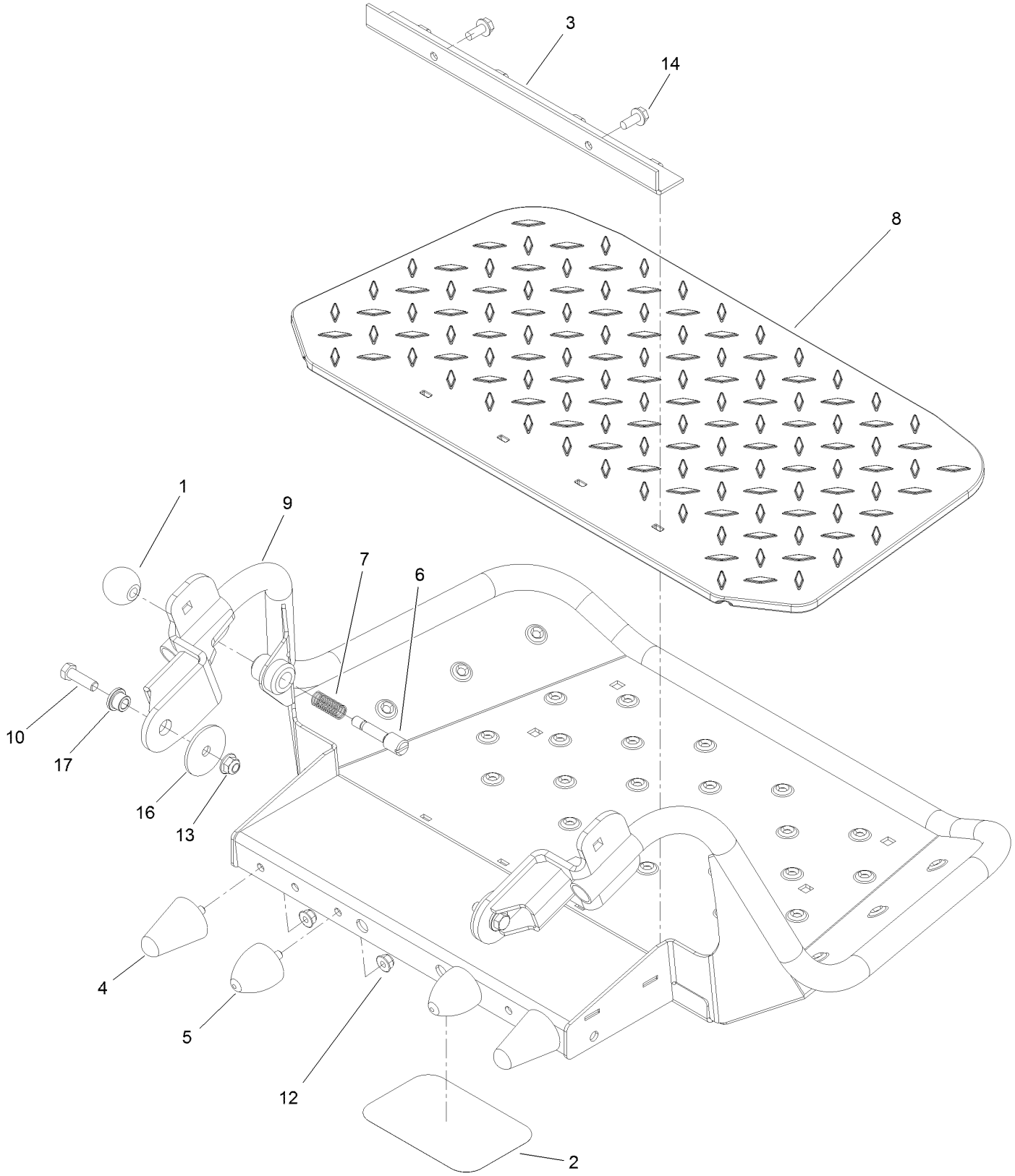

Platform Assembly No. 132-9402 (continued)

Ref.	Part Number	Qty.	Description
1	1-603175	1	Knob-Ball
2	68-3640	1	Decal
3	114-1920-03	1	Clamp-Shield
4	114-1925	2	Bumper-Rubber
5	114-1926	2	Bumper-Rubber
6	119-8650	1	Pin-Latch
7	114-5348	1	Spring
8	126-7157	1	Mat-Platform
9	132-9403-01	1	Platform ASM
10	323-7	2	Screw-HH
12	104-8300	4	Nut-HF, NI
13	104-8301	2	Nut-HF, NI
14	32144-11	2	Screw-HWHTF
16	83-1040	2	Washer-Flat
17	109-8788	2	Bushing-Flanged

Traction Drive Assembly

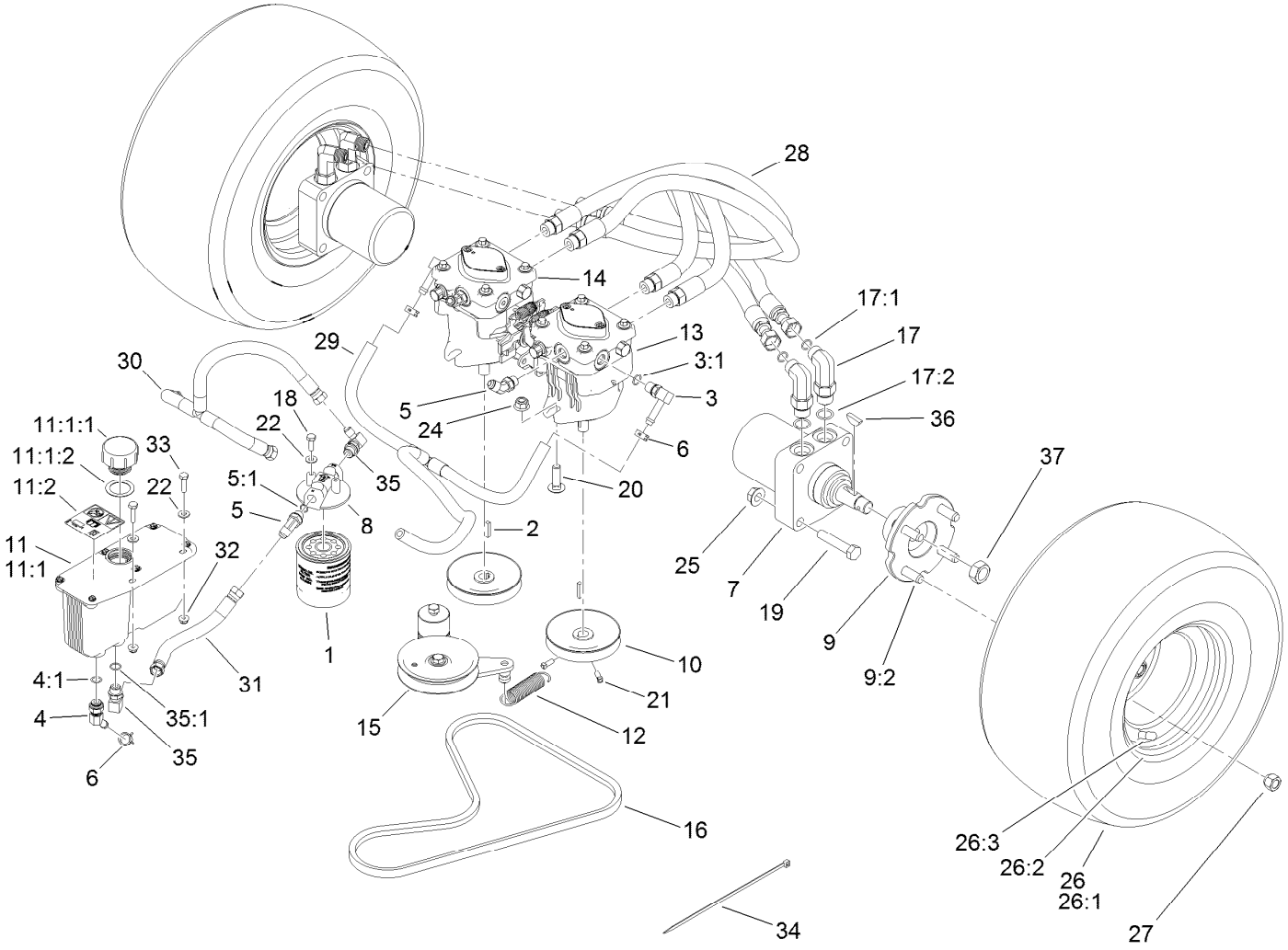

Traction Drive Assembly (continued)

Ref.	Part Number	Qty.	Description
1	114-3494	1	Element-Filter, 25 Micron
2	1-807272	2	Key
3	100-4887	2	Fitting-Elbow, 90
3:1	237-42	1	O-Ring
4	103-1807	1	Fitting-Barbed, 45 DEG
4:1	237-42	1	O-Ring
5	353-212	3	Fitting-Elbow, 45 DEG
5:1	237-42	1	O-Ring
6	103-1988	3	Clamp-Hose
7	104-1171	2	HYD Motor ASM
8	104-7836	1	Head-Filter
9	105-0800	2	Wheel Hub ASM
9:2	10-6830	4	Stud-Type, Drive
10	105-5648	2	Pulley-Pump
11	107-8433	1	HYD Reservoir ASM
11:1		1	Reservoir-HYD ●
11:1:1	103-1948	1	Cap-Reservoir, HYD
11:1:2	103-1949	1	Gasket-Cap
11:2	115-4212	1	Decal-Warning
12	108-4056	1	Spring-Extension
13	119-0176	1	Hydraulic Pump ASM
14	119-0177	1	Hydraulic Pump ASM
15	117-7685	1	Pump Idler ASM
16	119-0174	1	Belt-V
17	119-8680	4	Fitting-Elbow, 90

Ref.	Part Number	Qty.	Description
17:1	237-30	1	O-Ring
17:2	237-80	1	O-Ring
18	321-3	2	Screw-HH
19	325-10	8	Screw-HH
20	3232-3	4	Bolt-CARR
21	3241-5	4	Screw-Set
22	3256-22	4	Washer-Flat
24	114-8417	4	Nut-HF, NI
25	32128-23	8	Nut-HF
26	116-4587	2	Wheel/Tire ASM
26:1	116-4605	1	Rim-8 Inch
26:2	116-4606	1	Tire
26:3	232-27	1	Stem-Valve
27	242-50	8	Nut-Lug
28	119-0173	4	HYD Hose ASM
29	119-8745	1	HYD Hose ASM
30	119-0206	1	HYD Hose ASM
31	119-0203	1	HYD Hose ASM
32	104-7201	2	Nut-HF
33	321-6	2	Screw-HH
34	3290-378	1	Tie-Cable
35	103-1802	2	Fitting-Elbow, 90 DEG
35:1	237-42	1	O-Ring
36	3257-8	2	Key-Woodruff
37	85-7310	2	Nut-Motor, Wheel

● Not serviced separately

Hydraulic Motor Assembly 104-1171

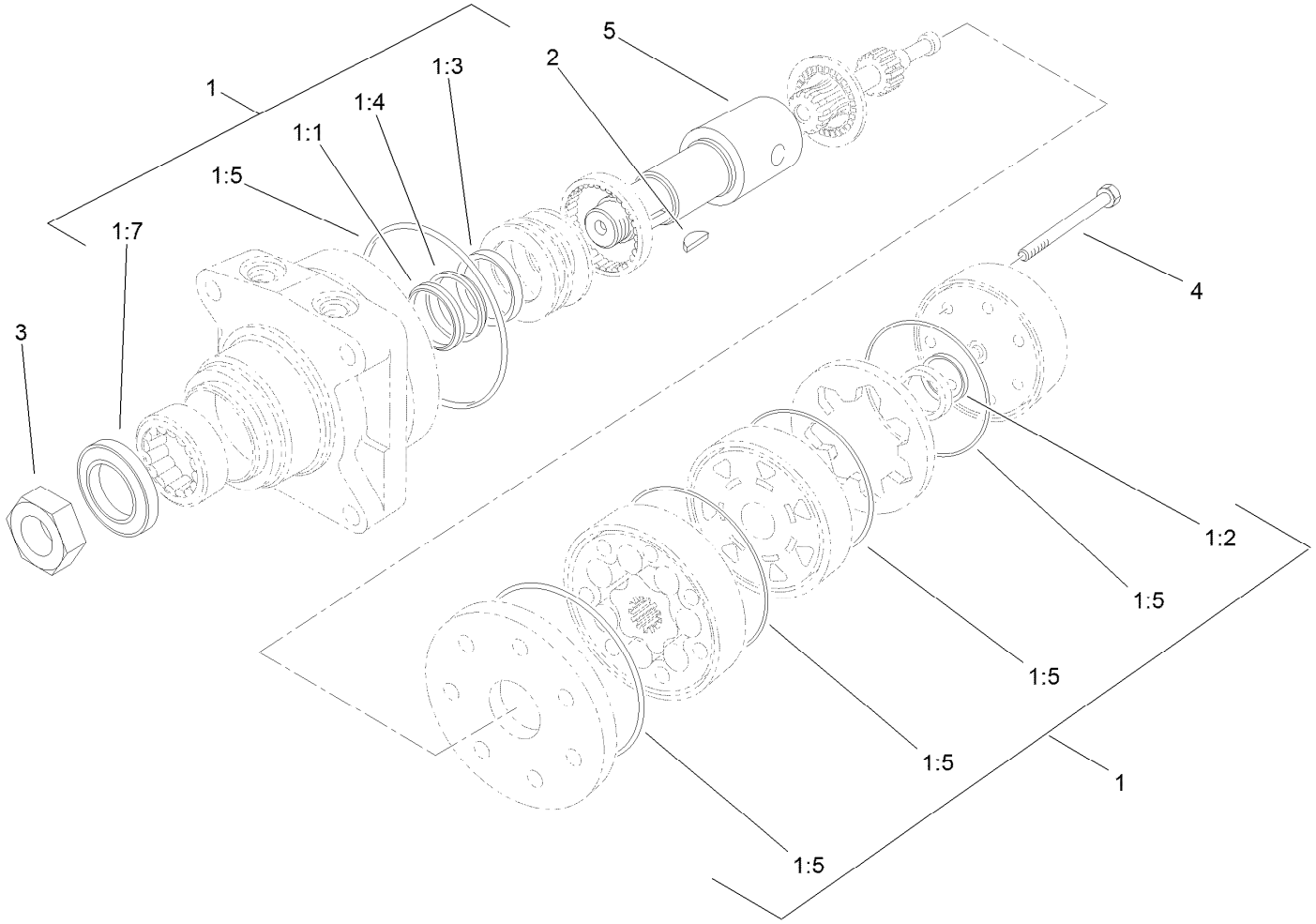

Hydraulic Motor Assembly 104-1171 (continued)

Ref.	Part Number	Qty.	Description
1	1-000119	1	Seal Kit
1:1		1	Ring-Back Up ●
1:2		1	Seal-Commutator ●
1:3		1	Seal-Shaft (Viton) ●
1:4		1	Washer-Back Up, Steel ●
1:5		5	Ring-Seal (Viton) ●
1:7		1	Seal-Dirt And Water ●
2	3257-8	1	Key-Woodruff
3	85-7310	1	Nut-Motor, Wheel
4	106-5549	6	Bolt-Special
5	106-8764	1	Shaft-Coupling

● Not serviced separately

Pump Idler Assembly No. 117-7685

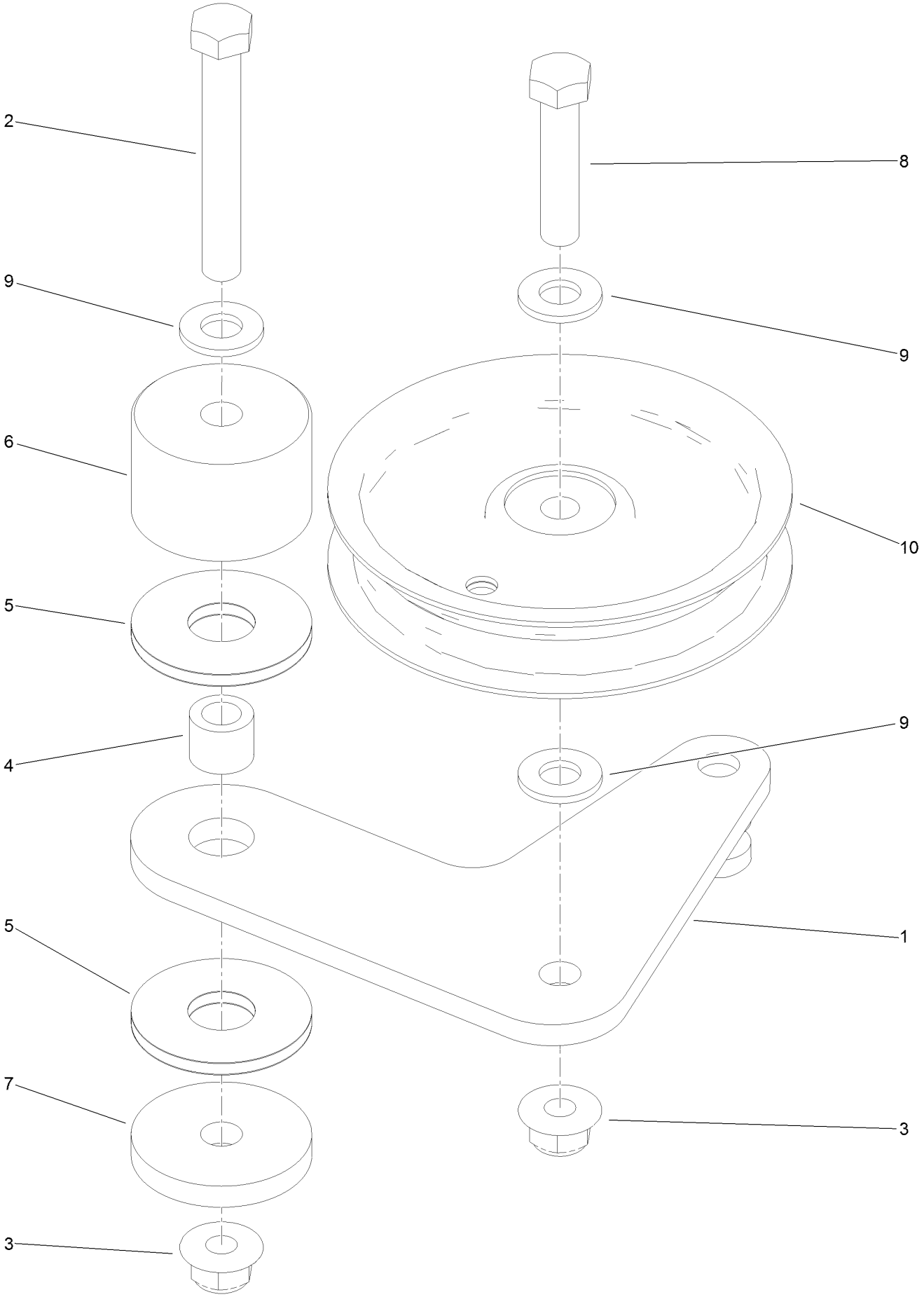

Pump Idler Assembly No. 117-7685 (continued)

Ref.	Part Number	Qty.	Description
1	117-7684	1	Plate-Idler
2	323-13	1	Screw-HH
3	104-8301	2	Nut-HF, NI
4	1-413088	1	Bushing-Lever, Lift
5	114-0463	2	Washer-Friction, Composite
6	116-7599	1	Hub, Idler
7	110-9981	1	Washer-Plain
8	323-9	1	Screw-HH
9	3256-24	3	Washer-Flat
10	93-1622	1	Pulley-Idler

Motion Control Assembly

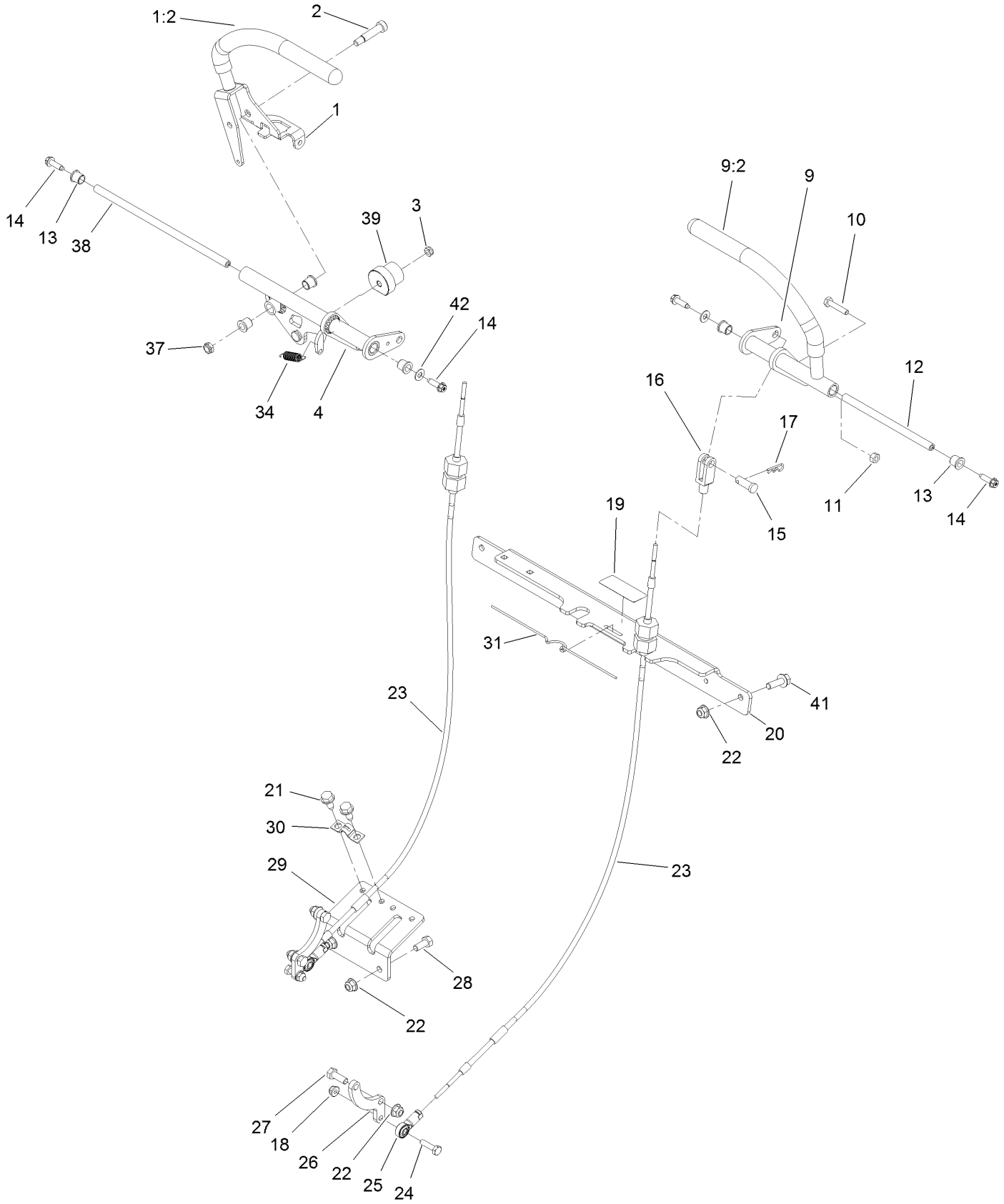

Motion Control Assembly (continued)

Ref.	Part Number	Qty.	Description
1	120-8393	1	RH Lever ASM
1:2	119-0222	1	Grip
2	114-0239	1	Screw-HSH
3	3296-56	1	Nut-Lock, NI
4	131-7403	1	RH Motion Control ASM
9	125-4671	1	LH Motion Control ASM
9:2	119-0222	1	Grip
10	114-0282	2	Screw-HH
11	3217-5	2	Nut-Hex
12	119-1885	1	Shaft-Pivot, Motion Control
13	103-9928	6	Bearing
14	80-0700	4	Screw-HH, Torx
15	1-808284	2	Pin-Clevis
16	119-1869	2	Yoke-Female
17	3290-307	2	Pin-Cotter
18	104-7201	2	Nut-HF
19	119-1854	1	Decal-Tracking, Hydro
20	117-6239-01	1	Bracket-Cross

Ref.	Part Number	Qty.	Description
21	32144-70	4	Screw-HWHTF
22	104-8300	8	Nut-HF, NI
23	117-6225	2	Cable ASM
24	321-6	2	Screw-HH
25	117-6222	2	Rod End-Ball Joint
26	117-6204	2	Arm-Control, Pump
27	322-4	4	Screw-HH
28	322-3	2	Screw-HH
29	117-6238-01	1	Bracket-Clamp, Cable
30	93-2279	2	Clamp-Cable
31	114-0433	1	Clip-Spring
34	114-0249	1	Spring-Extension
37	3296-47	1	Nut-Lock, NI
38	119-1886	1	Shaft-Pivot
39	126-1499	1	Cam
41	3234-29	2	Screw-HHF
42	3256-1	2	Washer-Flat

Engine Assembly

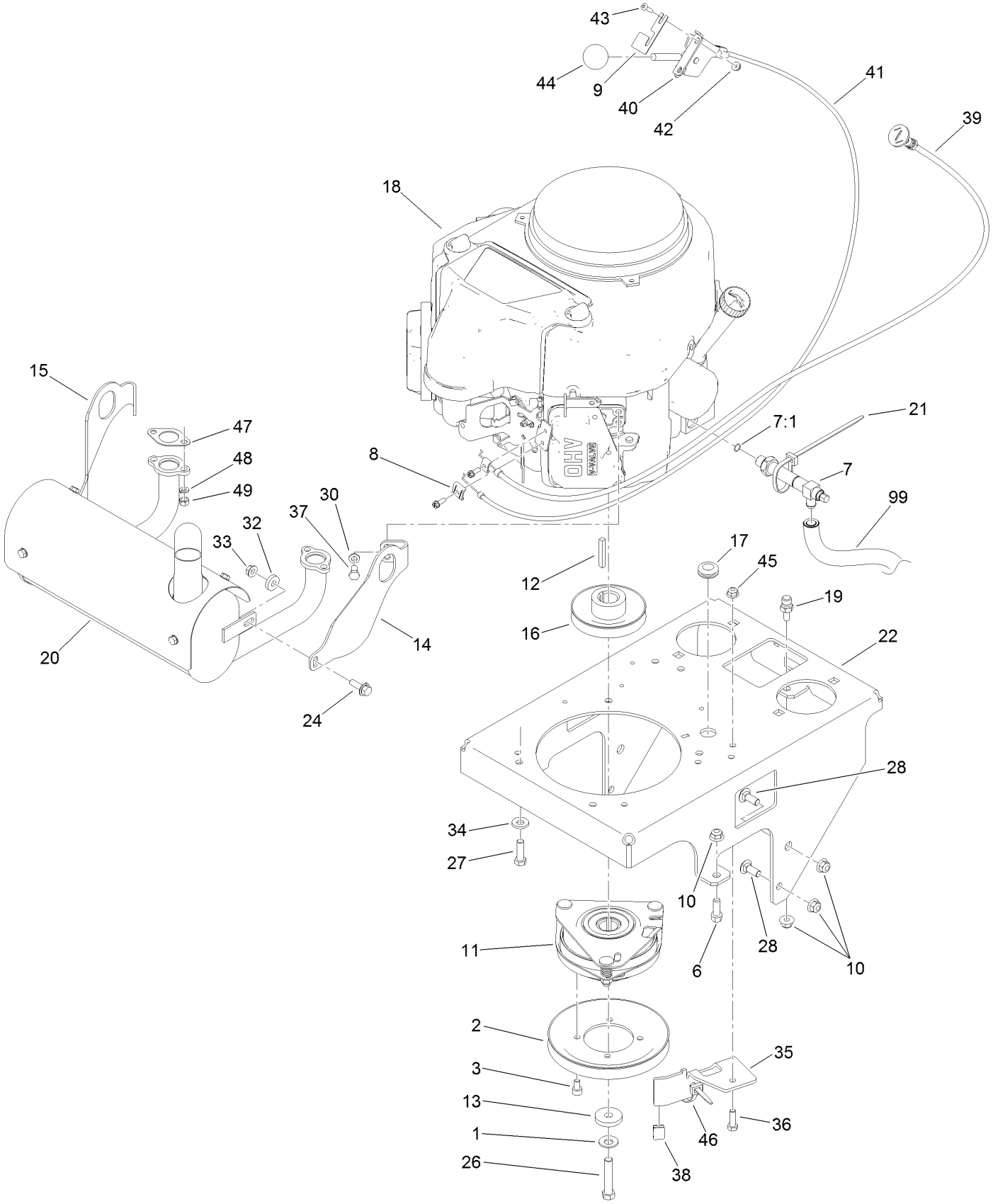

Engine Assembly (continued)

Ref.	Part Number	Qty.	Description
1	1-603610	1	Washer-Spring
2	119-0215	1	Pulley
3	119-0221	4	Screw-HSH
6	92-1624	2	Screw-HWH
7	116-6126	1	Valve-Drain Oil
7:1	138-4636	1	O-Ring
8	81-1690	1	Clamp-Cable
9	119-1883	1	Plate-Set, Throttle
10	104-8301	7	Nut-HF, NI
11	119-0220	1	Clutch/Brake ASM
12	608006	1	Key-Square
13	107-4136	1	Washer
14	116-2353	1	Bracket-Muffler Mount, LH
15	116-2354	1	Bracket-Muffler Mount, RH
16	112-7067	1	Pulley
17	112-7069	1	Grommet
18		1	Engine-Kawasaki, Fs541V ■▲
18:1	92-2153	1	Spark Plug ●
18:2	119-5852	1	Filter-Oil ●
18:3	120-2235	1	Filter-Fuel ●
18:4	120-7447	1	Element-Filter, Air ●
19	132-4729	1	Anchor-Spring, Short
20	116-2351	1	Muffler
21	3290-378	1	Tie-Cable
22	119-0155-01	1	Base-Engine
24	3234-29	2	Screw-HHF
26	3212-9	1	Screw-HH
27	323-7	4	Screw-HH
28	3231-2	4	Bolt-CARR
30	3253-4	4	Washer-Lock
32	104-7658	2	Spacer
33	32128-25	2	Nut-HF
34	98-5975	3	Washer-Belleville
35	121-5984-03	1	Bracket-Clutch Stop
36	322-5	1	Screw-HH
37	33114-016	4	Screw-HH
38	109-3765	1	Bumper
39	106-9962	1	Control-Choke, Push / Pull
40	110-5547	1	Lever-Control
41	119-1882	1	Cable-Control
42	32128-17	2	Nut-Lock, Flange
43	110-0863	2	Screw-Torx
44	1-603175	1	Knob-Ball
45	104-8300	1	Nut-HF, NI
46	3290-378	2	Tie-Cable
47	1-653313	2	Gasket-Exhaust
48	114-3550	4	Washer-Lock
49	114-3549	4	Nut
99	103-1964	1	Hose-Drain, Oil ●

● Not illustrated
▲ Obtain parts from www.kawpowerepc.com
■ Not serviced separately

Fuel Tank Assembly

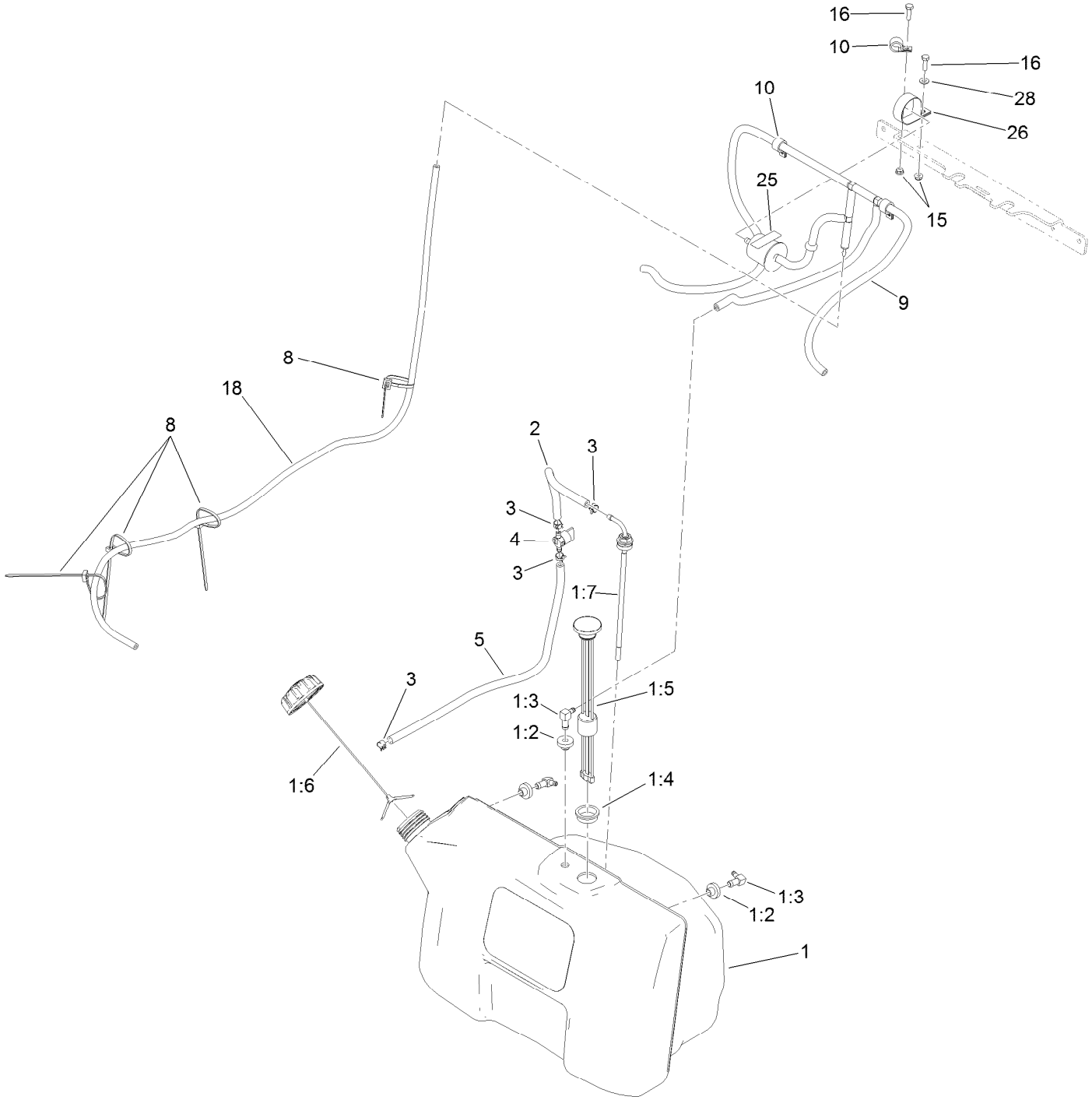

Fuel Tank Assembly (continued)

Ref.	Part Number	Qty.	Description
1	119-7340	1	Tank ASM
1:2	46-6560	3	Bushing
1:3	1-643172	3	Elbow-90 DEG
1:4	95-8972	1	Grommet
1:5	117-9719	1	Guage-Fuel
1:6	126-1789	1	Cap-Fuel, Ratcheting
1:7	116-3408	1	Fitting-Fuel, Bulkhead
2	109-0297	1	Hose-Fuel
3	2412-98	4	Clamp-Hose
4	1-603770	1	Valve-Fuel
5	109-0301	1	Hose-Fuel
8	3290-378	4	Tie-Cable
9		1	Vent Hose ASM ●
10	2412-87	3	Clamp-Cable
15	104-7201	2	Nut-HF
16	321-5	2	Screw-HH
18	110-4102	1	Hose-Fuel
25	116-4769	1	Decal-Filter, Emissions
26	2412-96	1	Clamp-R
28	3256-22	1	Washer-Flat

● Not serviced separately

Vent Hose Assembly

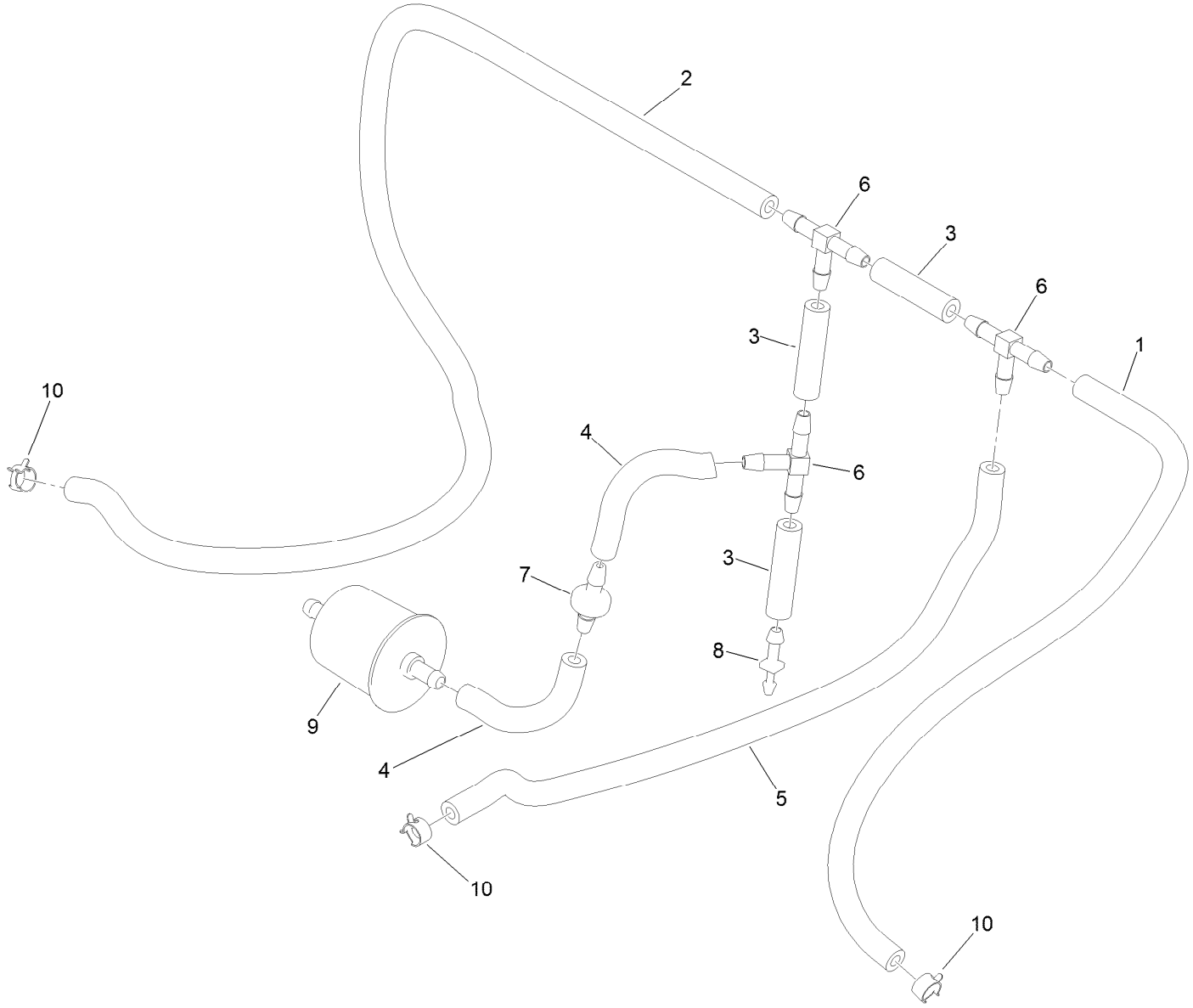

Vent Hose Assembly (continued)

Ref.	Part Number	Qty.	Description
1	110-5701	1	Hose-Fuel
2	110-5702	1	Hose-Fuel
3	99-9415	3	Hose-Fuel
4	109-0650	2	Hose-Fuel
5	109-0296	1	Hose-Fuel
6	99-5005	3	Fitting-Tee, Barbed
7	99-5000	1	Valve-Check, Fuel
8	106-8150	1	Fitting-Straight
9	120-2235	1	Filter-Fuel
10	2412-98	3	Clamp-Hose

Electrical Assembly

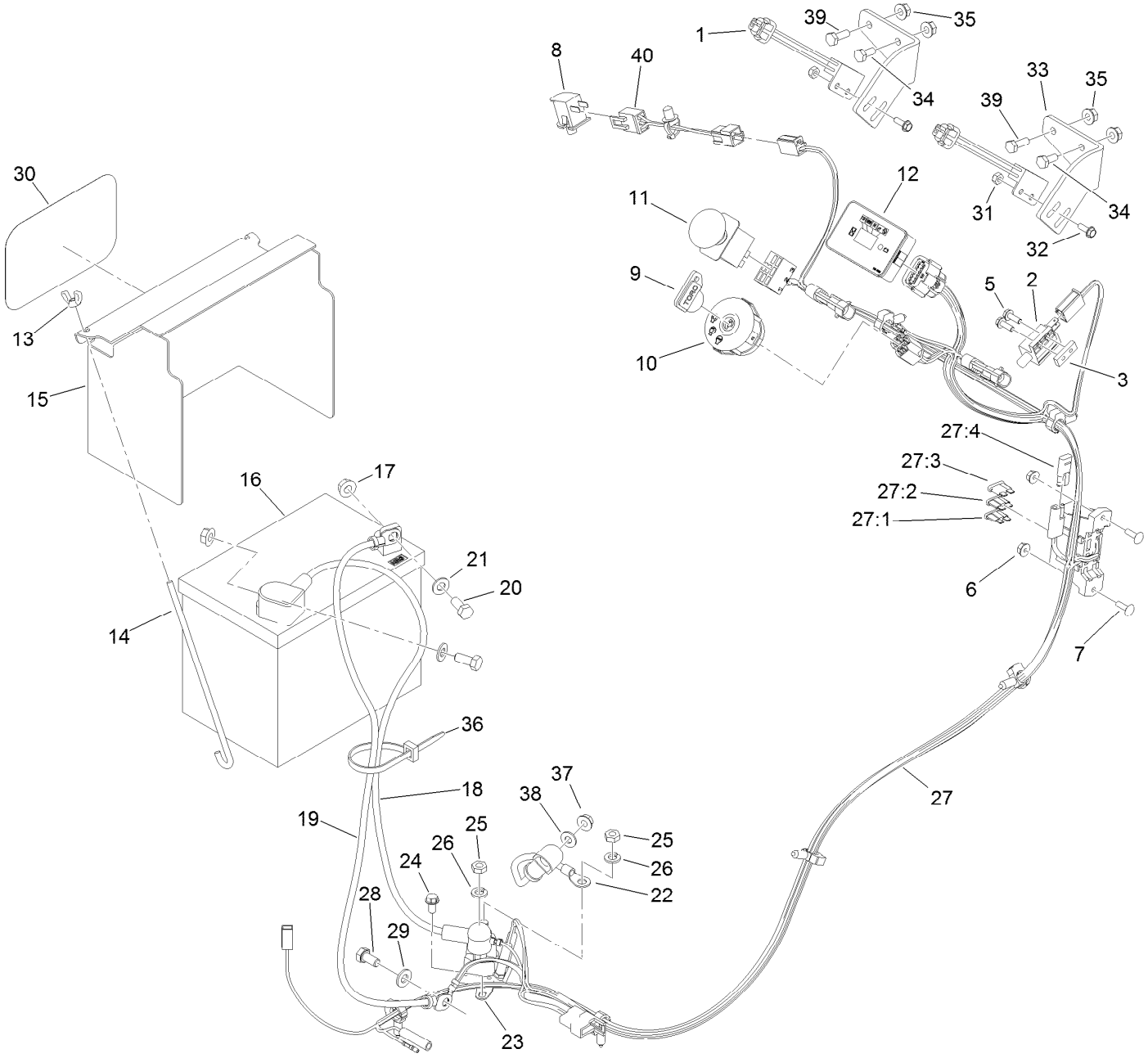

Electrical Assembly (continued)

Ref.	Part Number	Qty.	Description
1	105-0023	2	Switch-Proximity
2	1-513152	1	Switch-Closed, Normally
3	1-633181	1	Plate-Tapped
5	32105-2	2	Screw-SHWH
6	32128-17	2	Nut-Lock, Flange
7	1-807533	2	Bolt-CARR
8	82-2190	1	Switch-Bail
9	63-8360	1	Key-Ignition
10	117-2222	1	Switch-Ignition
11	114-0279	1	Switch-PTO, On-On
12	117-3886	1	Module-Hour Meter
13	1-543792	2	Wingnut
14	1-633651	2	Bolt-Holddown
15	117-0543-01	1	Cover-Battery
16	104-8162	1	Battery-Dry
17	109-5715	2	Nut-HHF, Smooth
18	120-6442	1	Cable-Battery, Positive
19	103-0705	1	Cable-Ground, Negative
20	322-3	2	Screw-HH
21	3256-23	2	Washer-Plain
22	106-8268	1	Cable-Battery, Red
23	117-1197	1	Solenoid

Ref.	Part Number	Qty.	Description
24	32144-4	2	Screw-HWH
25	3220-2	2	Nut-Jam
26	3253-4	2	Washer-Lock
27	119-0181	1	Harness-Wire
27:1	109103	1	Fuse-Blade, 30 Amp
27:2	109102	1	Fuse-Blade, 25 Amp
27:3	218-578	1	Fuse-Blade, 10 Amp
27:4	116-0053	1	Cap-Plug
28	33114-016	1	Screw-HH
29	33094-00	1	Washer-Plain
30	68-3640	1	Decal
31	3296-2	4	Nut-Lock, NI
32	32105-23	4	Screw
33	119-8503-01	2	Bracket-Mount, Switch
34	321-3	2	Screw-HH
35	32128-32	4	Nut-HHF
36	3290-378	1	Tie-Cable
37	32128-33	1	Nut-HF
38	3256-22	1	Washer-Flat
39	321-4	2	Screw-HH
40	130-1779	1	Harness-Wire, Jumper (OPC)

Deck Assembly

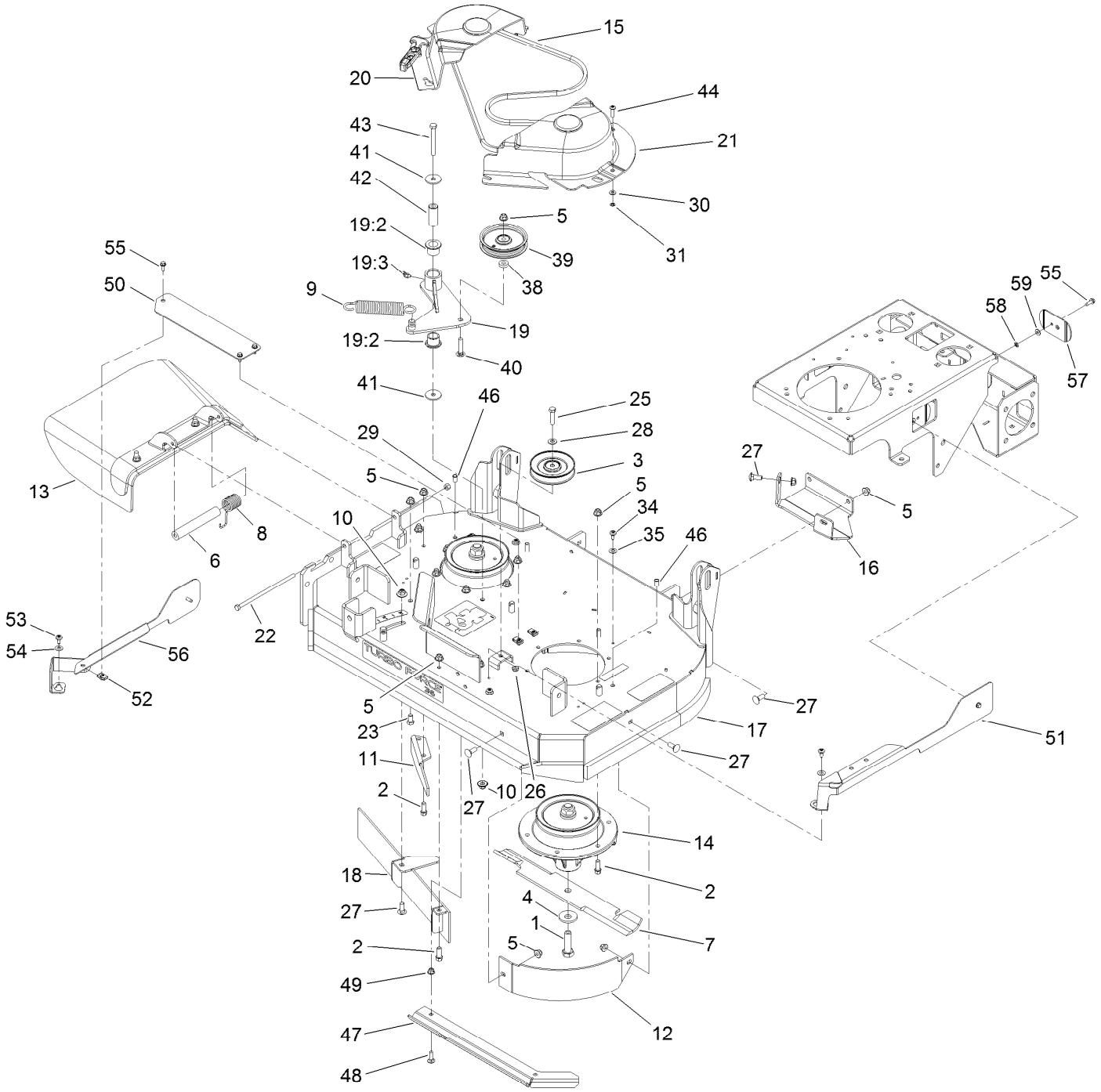

Deck Assembly (continued)

Ref.	Part Number	Qty.	Description
1	51-4060	2	Screw-Blade
2	92-1624	15	Screw-HWH
3	92-7099	1	Pulley-Idler
4	103-0865	2	Washer-Blade Bolt, Heavy
5	104-8301	25	Nut-HF, NI
6	105-4622	1	Spacer
7	105-7781-03	2	Blade-18In, Hi Flow
8	108-4052	1	Spring-Torsion
9	119-0394	1	Spring-Extension
10	109-6658	2	Nut-Flange, NI
11	110-0754-01	1	Baffle-Discharge
12	110-6903-03	1	Baffle-Front, LH
13	119-2347	1	Deflector ASM
14	117-7638	2	Spindle ASM
15	117-7641	1	Belt-V
16	117-7687-01	1	Plate-Skid
17	121-6015	1	Deck And Decal ASM
18	119-0153-03	1	Front Baffle ASM
19	119-0180	1	Idler Arm ASM
19:2	33-3090	2	Bushing
19:3	302-11	1	Fitting-Lube, 45 DEG
20	119-1802	1	Cover-Belt, RH
21	119-1803	1	Cover-Belt, LH
22	322-50	1	Screw-HH
23	323-4	2	Screw-HH
25	323-8	1	Screw-HH
26	3296-59	1	Nut-Lock, NI
27	3231-2	7	Bolt-CARR
28	3256-24	1	Washer-Flat
29	3296-29	1	Nut-Lock, NI
30	3256-22	2	Washer-Flat
31	106-8737	2	Nut-Retainer
34	120-7950	4	Screw-Shoulder
35	73-0041	4	Washer-Thrust
38	5-0652	1	Spacer
39	93-1622	1	Pulley-Idler
40	3231-5	1	Screw-CARR
41	1-213069	2	Washer
42	119-0208	1	Spacer-Plain
43	323-20	1	Screw-HH
44	32105-32	2	Screw-TTH
46	32148-6	2	Nut-Clinch
47	119-7839-01	1	Extender-Deck
48	3230-2	2	Bolt-CARR
49	104-8300	2	Nut-HF, NI
50	131-1506-01	1	Guard-Deck, Center
51	131-1497-01	1	Guard-Deck, LH
52	107069	3	Clip
53	120-7950	2	Screw-Shoulder
54	73-0041	2	Washer-Thrust
55	32144-44	6	Screw-HWH, Thread Roll
56	131-1498-01	1	Guard-Deck, RH
57	131-1495-01	4	Guard-Plate
58	106-8737	6	Nut-Retainer
59	119-8952	6	Washer

Deflector Assembly No. 119-2347

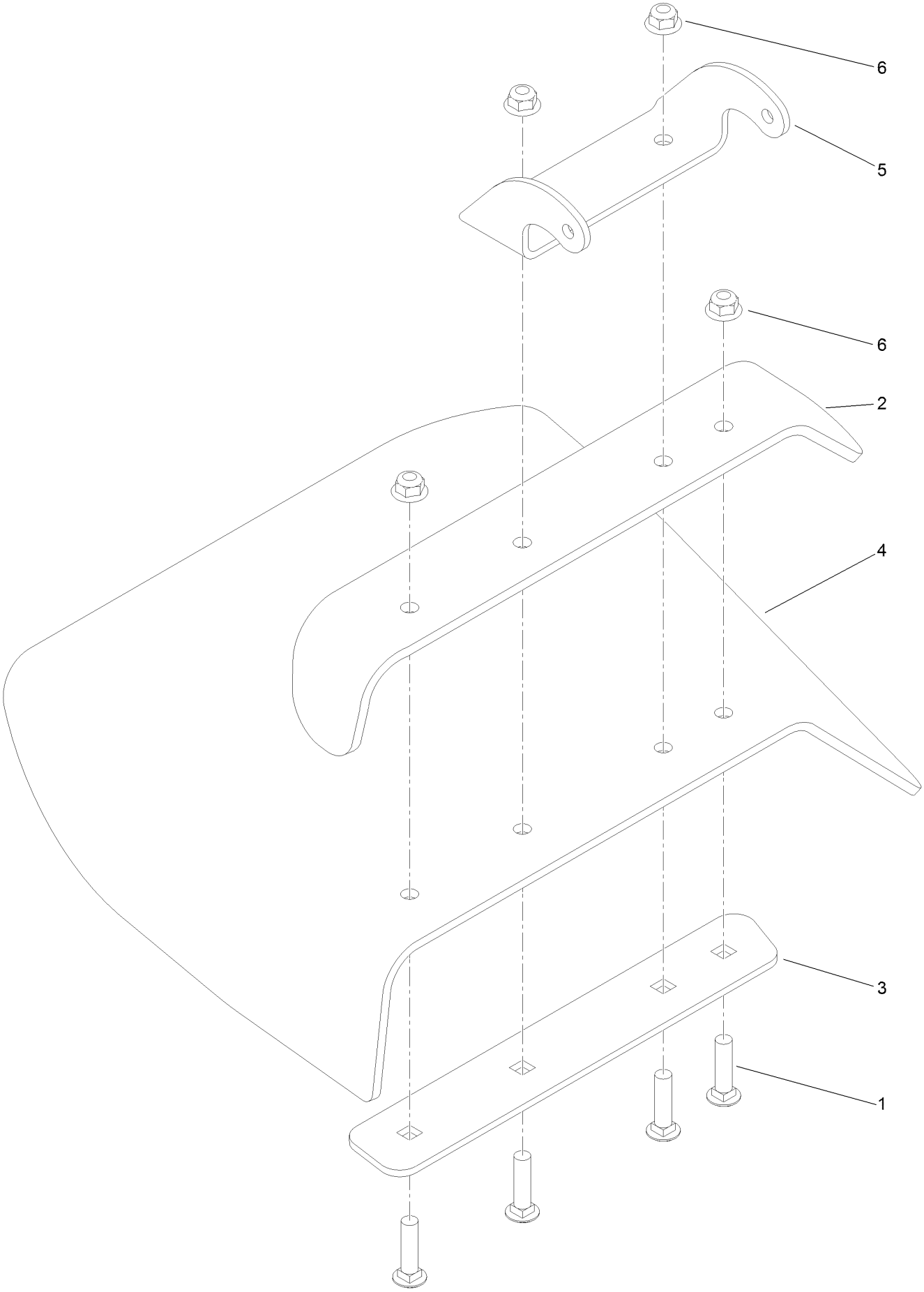

Deflector Assembly No. 119-2347 (continued)

Ref.	Part Number	Qty.	Description
1	3231-4	4	Screw-CARR
2	110-0792-01	1	Deflector
3	110-0793-03	1	Strap-Discharge
4	119-2346	1	Deflector-Rubber
5	110-9923-01	1	Bracket-Mounting, Deflector
6	104-8301	4	Nut-HF, NI

Spindle Assembly No. 117-7638

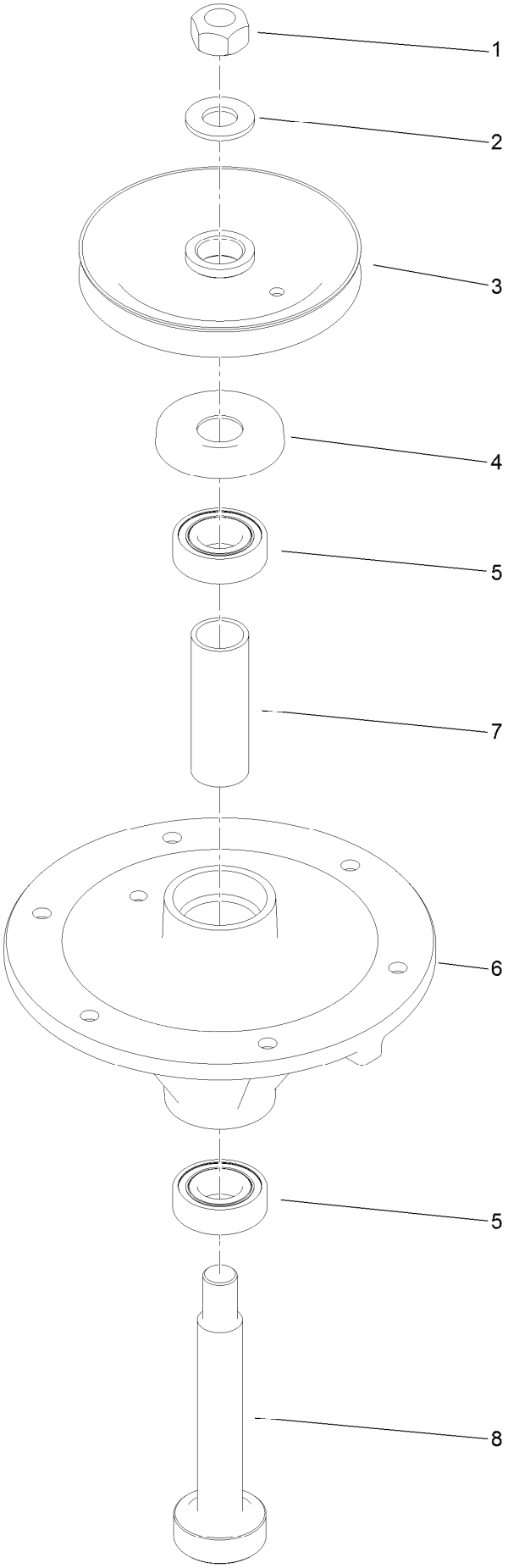

Spindle Assembly No. 117-7638 (continued)

Ref.	Part Number	Qty.	Description
1	3219-7	1	Nut-Hex
2	7-4150	1	Washer
3	117-7614	1	Pulley
4	106-0873	1	Shield-Bearing
5	116-0720	2	Bearing-Ball
6	108-6696	1	Housing-Spindle
7	110-0727	1	Spacer-Bearing
8	110-0726	1	Shaft-Spindle

Deck Decal Assembly No. 121-6015

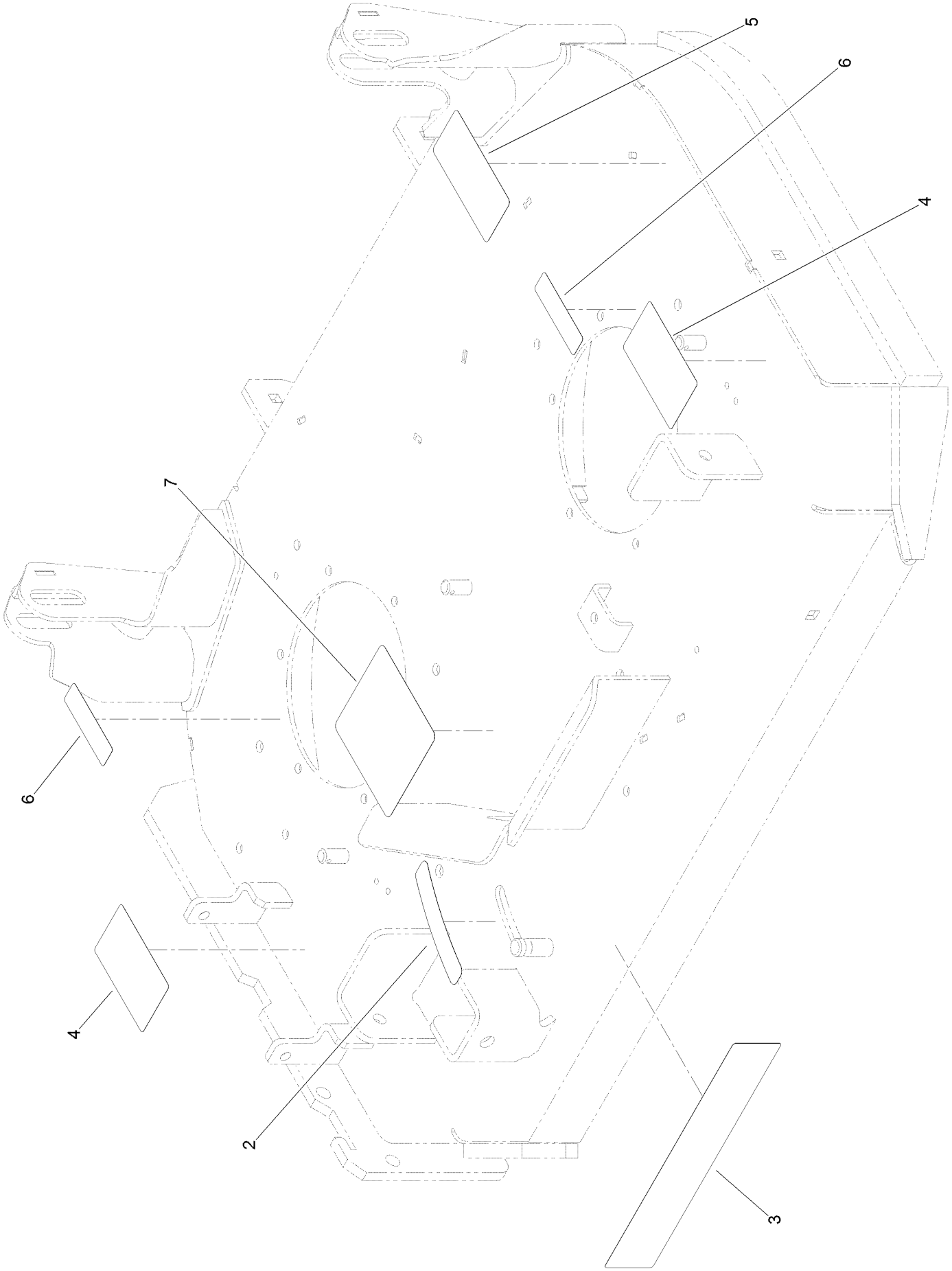

Deck Decal Assembly No. 121-6015 (continued)

Ref.	Part Number	Qty.	Description
2	110-2067	1	Decal-Setting, Baffle
3	119-0197	1	Decal
4	121-6049	2	Decal-Danger
5	93-7818	1	Decal-Torque, Blade Bolt
6	119-0217	2	Decal-Danger
7	119-0186	1	Decal-Routing, Belt

Attachments and Accessories

For 74534TE GrandStand Mower With 91cm TURBO FORCE Cutting Unit

Product Name	Model/Part
Blade-Hi Flow, 18in (6 Pack)	108-1117
Blade-Lo Flow, 18in (6 Pack)	110-0406
Blade-Recycler, 18in (6 Pack)	110-0408
Blade-Med Flow, 18in (6 Pack)	110-0409
36in Recycler Kit	110-2080
Light Kit	114-3505
Hypr-Oil 500 (quart)	114-4713
Hypr-Oil 500 (gallon)	114-4714
Hypr-Oil 500-5 (5 gallon)	114-4715
Weight Kit	117-3620
Striping Kit	117-8560
Operator-Controlled Discharge Chute Kit with Bag	117-8565
Oil Filter	119-5852
Filter-Fuel	120-2235
Element-Filter, Air	120-7447
Bagger Adaptor Kit	121-7515
Trash Bag Kit	121-7530
Soft Bag (3 Bushel)	30104
Spark Plug	92-2153
Spark Arrestor	98-9099

Notes:

TORO®

Count on it.