Form No. 3423-982 Rev A

TORO®

Count on it.

Parts Catalog

12V Electrical Accessory Port Kit

CT Series Turf Mowers or Groundsmaster® 3400 Traction Unit

Model No. 02902

Register at www.Toro.com.
Original Instructions (EN)

CE

3423-982 A

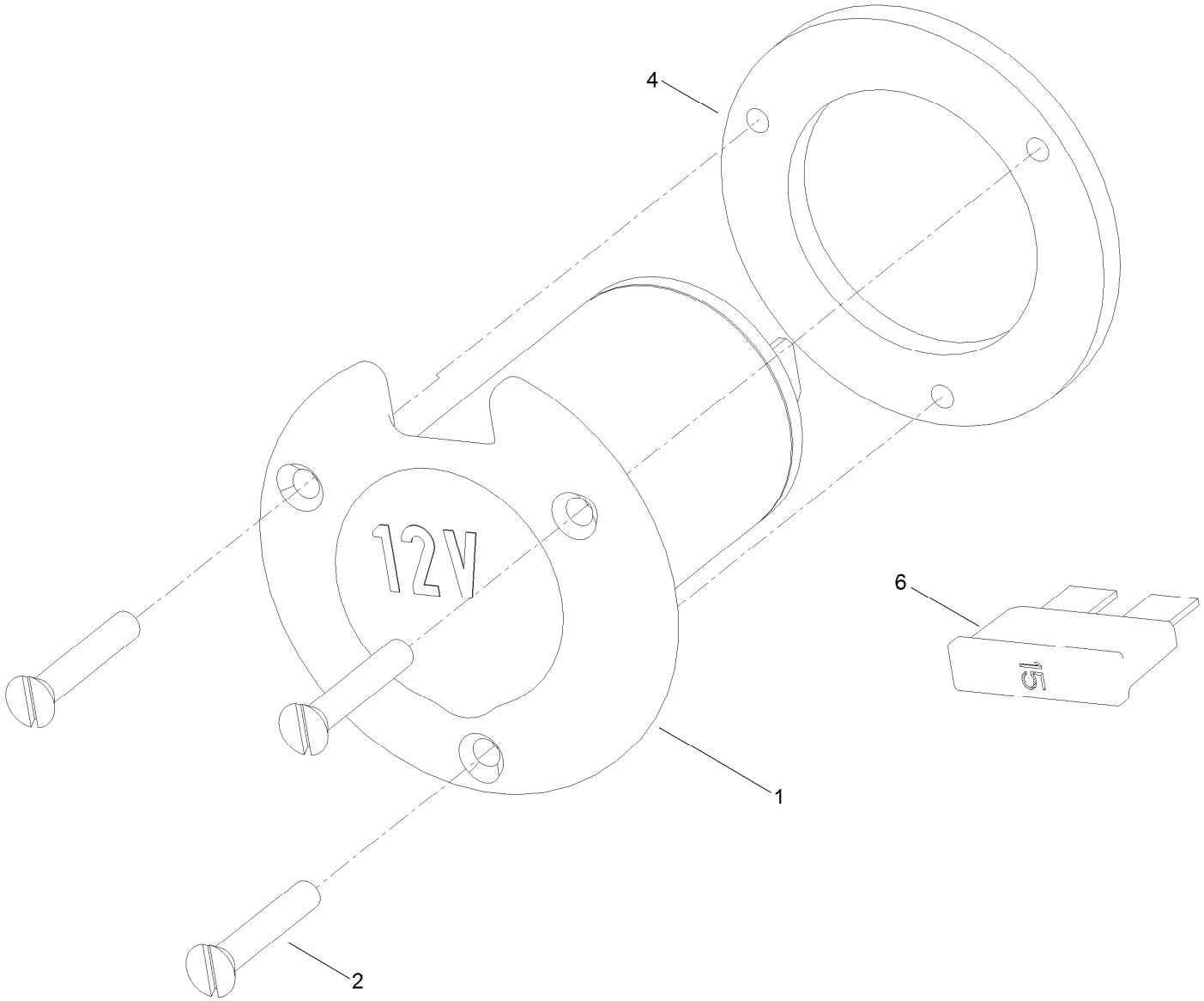

Power Port Assembly

Ref.	*Part Number*	*Qty.*	*Description*
1	111-2888	1	Socket
2	111-3539	3	Screw-Slot, Countersunk
4	111-6026	1	Bracket-Securing
6	70-09-151	1	Fuse-15A