Form No. 3418-639 Rev C

TORO®

Count on it.

Operator's Manual

Greensmaster® 1000 and 1600 Mower

Model No. 04055—Serial No. 401375001 and Up
Model No. 04056—Serial No. 401380001 and Up

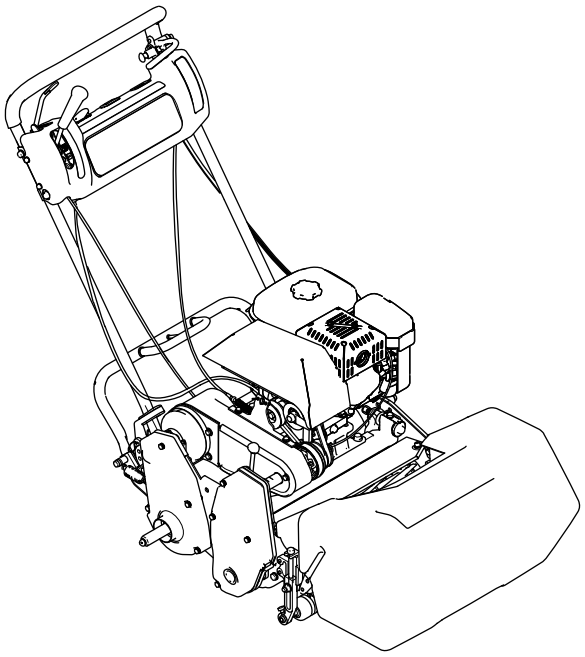

Register at www.Toro.com.
Original Instructions (EN)

CE

3418-639 C

This product complies with all relevant European directives; for details, please see the separate product specific Declaration of Conformity (DOC) sheet.

It is a violation of California Public Resource Code Section 4442 or 4443 to use or operate the engine on any forest-covered, brush-covered, or grass-covered land unless the engine is equipped with a spark arrester, as defined in Section 4442, maintained in effective working order, or the engine is constructed, equipped, and maintained for the prevention of fire.

The enclosed engine owner's manual is supplied for information regarding the US Environmental Protection Agency (EPA) and the California Emission Control Regulation of emission systems, maintenance, and warranty. Replacements may be ordered through the engine manufacturer.

⚠ WARNING

CALIFORNIA
Proposition 65 Warning

The engine exhaust from this product contains chemicals known to the State of California to cause cancer, birth defects, or other reproductive harm.

Introduction

This machine is a walk behind, reel-blade lawn mower intended to be used by professional, hired operators in commercial applications. It is primarily designed for cutting grass on well-maintained turf.

Read this information carefully to learn how to operate and maintain your product properly and to avoid injury and product damage. You are responsible for operating the product properly and safely.

Visit www.Toro.com for more information, including safety tips, training materials, accessory information, help finding a dealer, or to register your product.

Whenever you need service, genuine Toro parts, or additional information, contact an authorized Toro distributor and have the model and serial numbers of your product ready. The model and serial numbers are located on a plate on the rear frame (Figure 1). Write the numbers in the space provided.

Important: **With your mobile device, you can scan the QR code (if equipped) on the serial number decal to access warranty, parts, and other product information.**

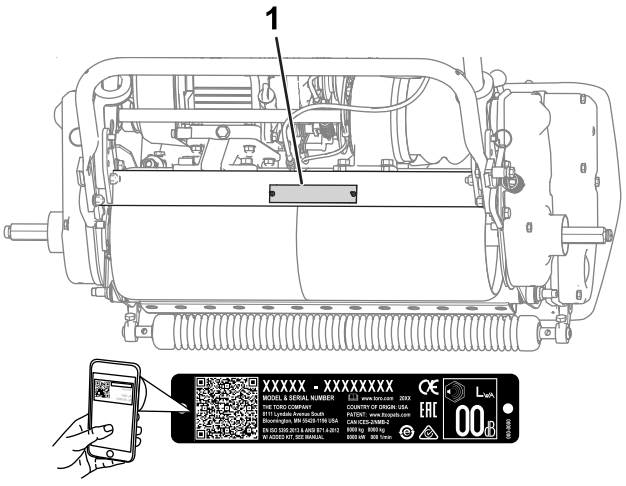

g235302

Figure 1

1. Model and serial number location

Model No. _____

Serial No. _____

This manual identifies potential hazards and has safety messages identified by the safety-alert symbol (Figure 2), which signals a hazard that may cause serious injury or death if you do not follow the recommended precautions.



g000502

Figure 2

1. Safety-alert symbol

This manual uses 2 words to highlight information. **Important** calls attention to special mechanical information and **Note** emphasizes general information worthy of special attention.

Operating this machine between 1,500 and 2,400 m (5,000 to 8,000 ft) above sea level requires the high-altitude kit. See your authorized Toro distributor.

© 2018—The Toro® Company
8111 Lyndale Avenue South
Bloomington, MN 55420

Contact us at www.Toro.com.
Printed in the USA
All Rights Reserved

Contents

Safety 4
General Safety 4
Safety and Instructional Decals 4
Setup 7
1 Installing and Adjusting the Handle 8
2 Installing the Kickstand 9
3 Installing the Transport Wheel Shafts 10
4 Installing the Transport Wheels 10
5 Adjusting the Cutting Unit 11
6 Installing the CE Decals 11
7 Installing the Grass Basket 11
8 Breaking in the Machine 12
Product Overview 13
Controls 13
Specifications 15
Attachments/Accessories 15
Before Operation 16
Before Operation Safety 16
Performing Daily Maintenance 16
Checking the Engine-Oil Level 16
Fuel Specifications 16
Filling the Fuel Tank 17
Setting the Machine to Match Turf Conditions 18
Checking the Interlock-Switch Operation 20
Transporting the Machine to a Job Site 20
Removing the Transport Wheels 20
During Operation 20
During Operation Safety 20
Starting the Engine 21
Shutting Off the Engine 22
Operating Tips 22
After Operation 23
After Operation Safety 23
Transporting the Machine 23
Maintenance 24
Recommended Maintenance Schedule(s) 24
Daily Maintenance Checklist 25
Pre-Maintenance Procedures 26
Maintenance Safety 26
Lubrication 27
Greasing the Machine 27
Engine Maintenance 28
Engine Safety 28
Servicing the Engine Oil 28
Servicing the Air Cleaner 29
Servicing the Spark Plug 30
Fuel System Maintenance 31
Cleaning the Fuel Filter 31
Electrical System Maintenance 31
Servicing the Traction-Interlock Switch 31
Brake Maintenance 32
Adjusting the Service/Parking Brake 32
Belt Maintenance 33
Adjusting the Belts 33
Replacing the Differential Belt 35
Controls System Maintenance 36
Adjusting the Traction Control 36
Cutting Unit Maintenance 37
Blade Safety 37
Leveling the Rear Drum to the Reel 37
Adjusting the Bedknife to the Reel 37
Adjusting the Height-of-Cut 38
Adjusting the Grass Shield Height 39
Adjusting the Cut-Off Bar 40
Identifying the Bedbar 40
Servicing the Bedbar 40
Bedknife Specifications 41
Backlapping the Reel 43
Storage 44
Storage Safety 44
Storing the Machine 44

Safety

This machine has been designed in accordance with EN ISO 5395:2013 and ANSI B71.4-2017 and meets these standards when you add the Operator Presence Kit and required decals.

General Safety

This product is capable of amputating hands and feet and of throwing objects. Always follow all safety instructions to avoid serious personal injury.

Using this product for purposes other than its intended use could prove dangerous to you and bystanders.

- Read and understand the contents of this *Operator's Manual* before starting the engine.
- Do not put your hands or feet near moving components of the machine.
- Use your full attention while operating the machine. Do not engage in any activity that causes distractions; otherwise, injury or property damage may occur.
- Do not operate the machine without all guards and other safety protective devices in place and working on the machine.
- Keep clear of any discharge opening. Keep bystanders a safe distance away from the machine.
- Keep children out of the operating area. Never allow children to operate the machine.
- Stop the machine and shut off the engine before servicing, fueling, or unclogging the machine.

Improperly using or maintaining this machine can result in injury. To reduce the potential for injury, comply with these safety instructions and always pay attention to the safety-alert symbol, which means Caution, Warning, or Danger—personal safety instruction. Failure to comply with these instructions may result in personal injury or death.

You can find additional safety information where needed throughout this manual.

Safety and Instructional Decals

Safety decals and instructions are easily visible to the operator and are located near any area of potential danger. Replace any decal that is damaged or missing.

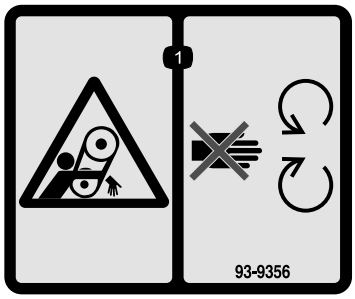

decal93-9356

93-9356

1. Entanglement hazard—stay away from moving parts.

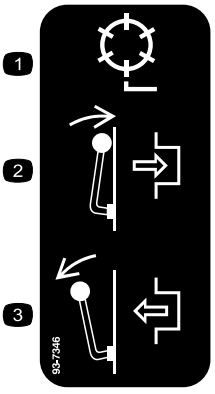

decal93-7346

93-7346

1. Reel drive
2. Engage
3. Disengage

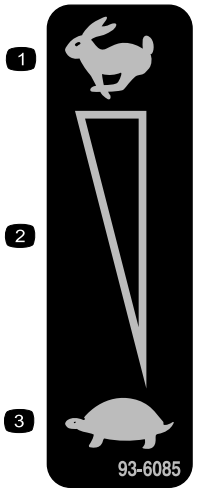

decal93-6085

93-6085

1. Fast
2. Continuous variable setting
3. Slow

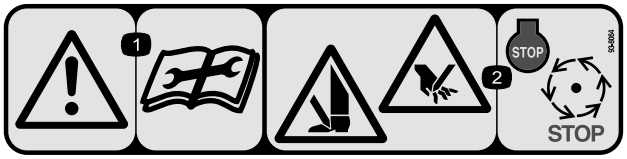

decal93-8064

93-8064

1. Warning—read the instructions before servicing or performing maintenance.
2. Cutting hazard of foot or hand—shut off the engine and wait for moving parts to stop.

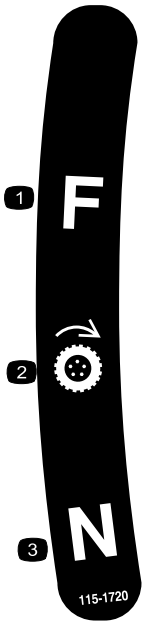

decal115-1720

115-1720

1. Forward
2. Drive wheel
3. Neutral

CALIFORNIA SPARK ARRESTER WARNING

Operation of this equipment may create sparks that can start fires around dry vegetation. A spark arrester may be required. The operator should contact local fire agencies for laws or regulations relating to fire prevention requirements. 117-2718

decal117-2718

117–2718

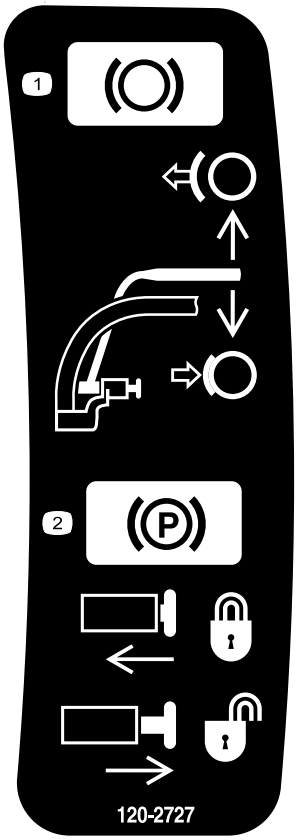

decal120-2727

120-2727

1. Brake—to engage, pull the lever toward the handle; to disengage, release the lever.
2. Parking brake—to lock, pull the lever toward the handle, press the button in and release the lever against the locking button; to release, pull the lever toward the handle until the button releases and release the lever.

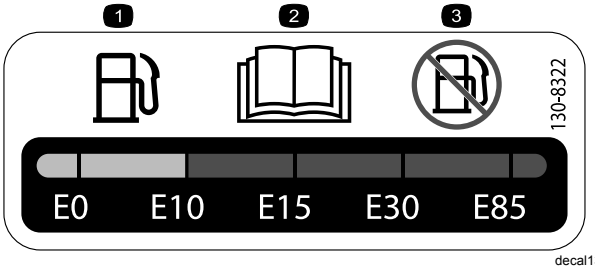

decal130-8322

130-8322

1. Use only gasoline that contains 10% ethanol by volume (E10) or less.
2. Read the *Operator's Manual*.
3. Do not use gasoline that contains more than 10% ethanol by volume (E10).

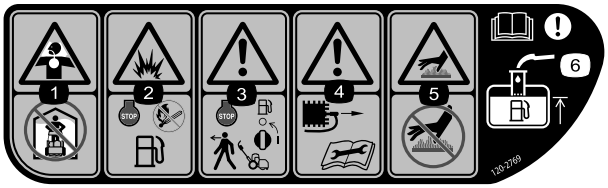

decal120-2769

120-2769

1. Toxic gas inhalation hazard—do not operate indoors.
2. Explosion hazard—shut off the engine and keep away from open flames when refueling.
3. Warning—shut off the engine and turn off the fuel before leaving the machine.
4. Warning—disconnect the spark plug wire and read the *Operator's Manual* before servicing or performing maintenance.
5. Hot surface/burn hazard—do not touch hot surfaces.
6. Warning—read the *Operator's Manual*; when adding fuel to the tank, only fill to the bottom of the fill tube.

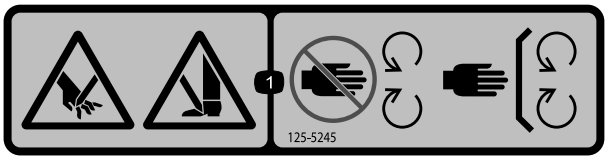

decal125-5245

125–5245

1. Cutting hazard of hand or foot—keep away from moving parts; keep all guards and shields in place.



decal120-2761

120-2761

1. Warning—read the *Operator's Manual*.
2. Warning—receive training before operating the machine.
3. Warning—wear hearing protection.
4. Thrown object hazard—keep bystanders away from the machine.
5. Warning—keep away from moving parts; keep all guards in place.

Setup

Loose Parts

Use the chart below to verify that all parts have been shipped.

Procedure	Description	Qty.	Use
1	Handle Cable tie	1 4	Install the handle.
2	Kickstand assembly Spring	1 1	Install the kickstand (Models 04054 and 04056 only).
3	Right wheel shaft Left wheel shaft	1 1	Install the transport wheel shafts.
4	Transport wheel	2	Install the transport wheels (optional).
5	No parts required	–	Adjust the cutting unit.
6	Production-year decal CE-mark decal	1 1	Install the CE decals (if required).
7	Grass basket	1	Install the grass basket.
8	No parts required	–	Break in the machine.

Media and Additional Parts

Description	Qty.	Use
Operator's Manual Engine Owner's Manual	1 1	

Note: Determine the left and right sides of the machine from the normal operating position.

1

Installing and Adjusting the Handle

Parts needed for this procedure:

1	Handle
4	Cable tie

Installing the Handle

1. Remove the bolts (5/16 inch), locknuts, ring pins, and hairpin cotters that secure the bottom of the handle arms to each side of the machine (Figure 3).

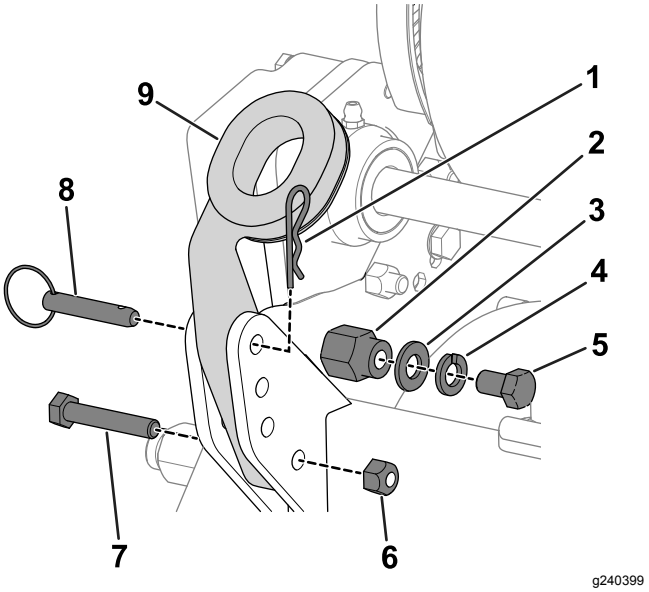

Figure 3

1. Hairpin cotter
2. Mounting pin
3. Washer
4. Lock washer
5. Bolt (3/8 inch)
6. Locknut
7. Bolt (5/16 inch)
8. Ring pin
9. Handle arm

2. Remove the bolts (3/8 inch), washers, and lock washers from the mounting pins on each side of the machine (Figure 3).
3. Insert the handle ends through the holes in the handle arms and align the holes with the mounting pins (Figure 3).
4. Squeeze the handle ends inward and install them on the mounting pins (Figure 4).

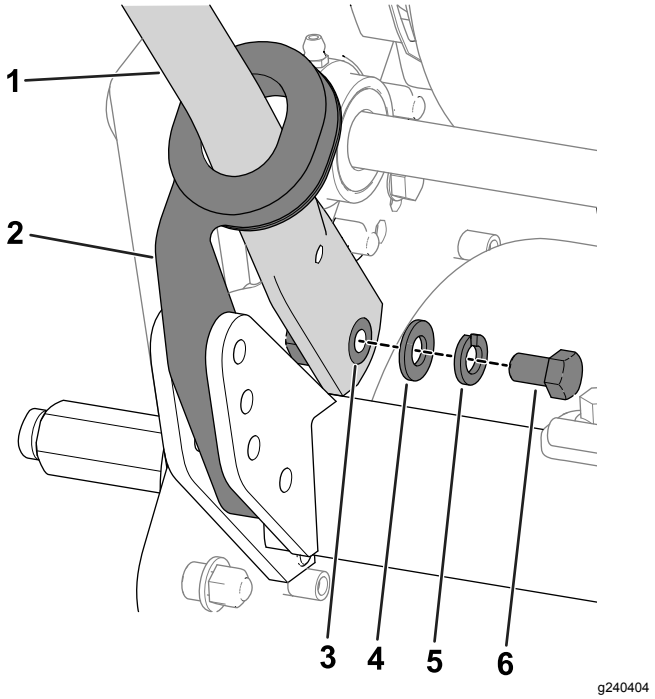

Figure 4

1. Handle
2. Handle arm
3. Mounting pin
4. Washer
5. Lock washer
6. Bolt (3/8 inch)

5. Secure the handle to the mounting pins with the bolts (3/8 inch), washers, and lock washers that you previously removed (Figure 4).
6. Use the bolts (5/16 inch), locknuts, hairpin cotters, and ring pins that you previously removed to secure the handle arms to the rear of the frame (Figure 3).
7. Secure the cables and wire harness to the handle with the cable ties (Figure 5).

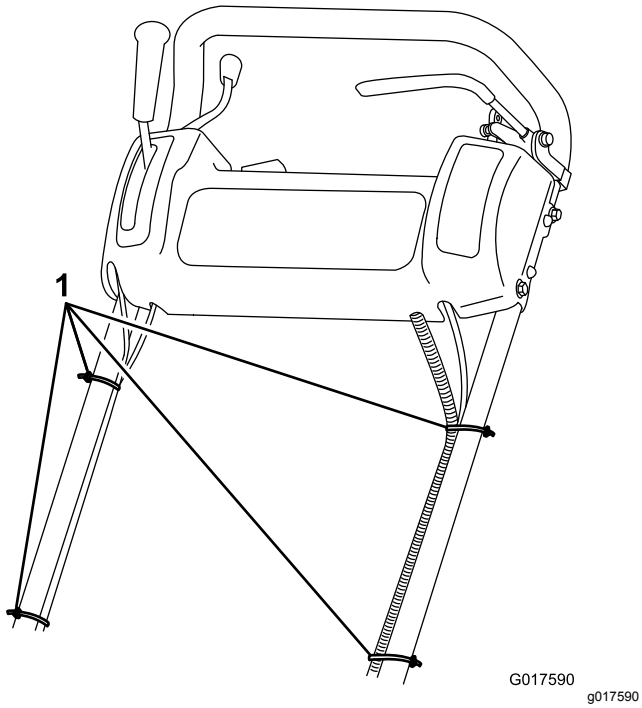

Figure 5

1. Cable ties

Adjusting the Handle

Refer to Figure 6 for this procedure.

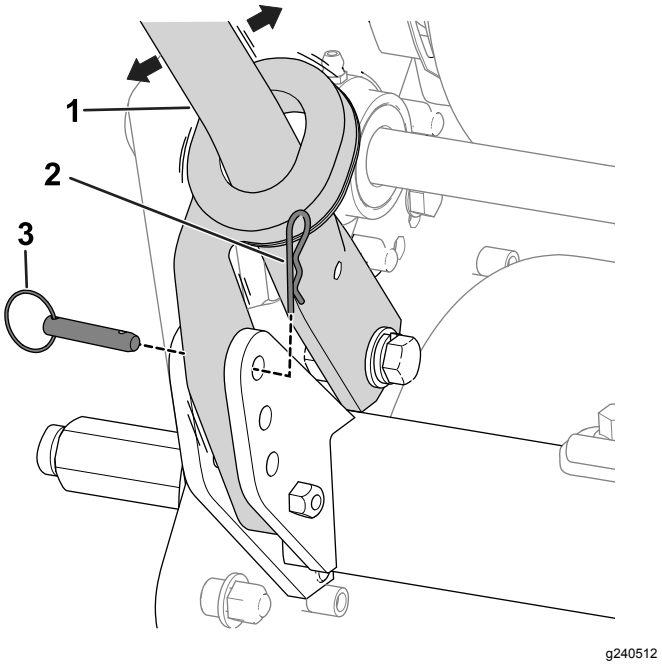

Figure 6

1. Handle
2. Hairpin cotter
3. Ring pin

1. Remove the hairpin cotters from the ring pins on each side of the machine.
2. While supporting the handle, remove the ring pins from each side and raise or lower the handle to the desired operating position.
3. Install the ring pins and hairpin cotters.

2

Installing the Kickstand

Models 04054 and 04056 Only

Parts needed for this procedure:

1	Kickstand assembly
1	Spring

Procedure

Note: The machine is shipped with the fasteners loosely installed on the kickstand assembly.

1. **On Model 04056 only**, connect the spring stud to the right-hand side of the kickstand (Figure 7) with the bolt, washer, and flange nut provided.

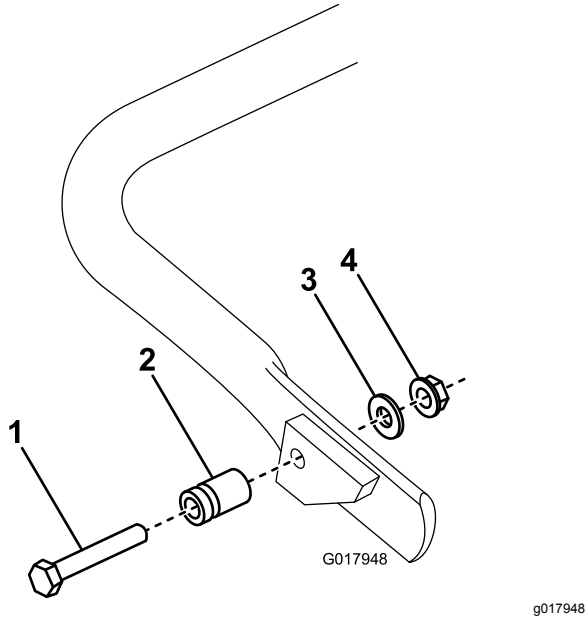

g017948

Figure 7

1. Bolt
2. Spring stud
3. Washer
4. Flange–head nut

2. Hook the spring into the hole in the spring bracket and onto the spring stud while aligning the kickstand with the mounting holes in the rear frame (Figure 8).

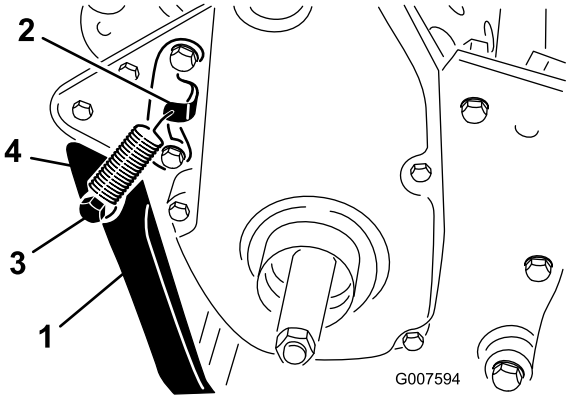

g007594

Figure 8

1. Kickstand
2. Spring bracket
3. Spring stud
4. Spring

3. Mount the kickstand to each side of the frame with a bolt, lock washer, spacer, flat washer, and locknut (Figure 8).
4. Position the spacer in the kickstand mounting hole.

3

Installing the Transport Wheel Shafts

Parts needed for this procedure:

1	Right wheel shaft
1	Left wheel shaft

Procedure

1. Push the kickstand down with your foot and pull up on the handle to support the machine on the kickstand.
2. Apply thread-locking adhesive to the threads of the wheel shafts.
3. Thread the right wheel shaft into the drive pulley on the right side of the machine (Figure 9).

   Note: The right wheel shaft has left-hand threads.

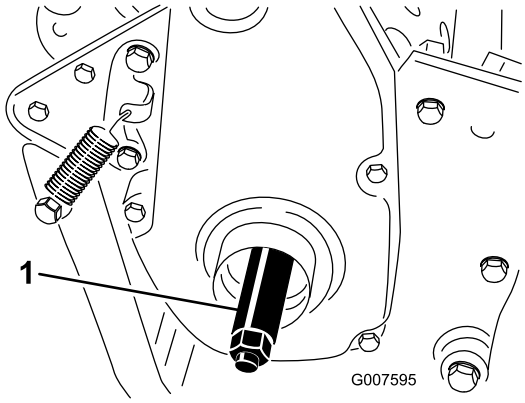

g007595

Figure 9

1. Right wheel shaft

4. Torque the shaft to 88 to 101 N·m (65 to 75 ft-lb).
5. Repeat steps 2 through 4 to install the left wheel shaft to the left side of the machine.

4

Installing the Transport Wheels

Optional

Parts needed for this procedure:

2	Transport wheel

Procedure

1. Push the kickstand down with your foot and pull up on the handle to support the machine on the kickstand.
2. Slide a wheel onto an axle.
3. Pivot the wheel locking clip away from center of the wheel allowing it to slide farther onto the axle (Figure 10).

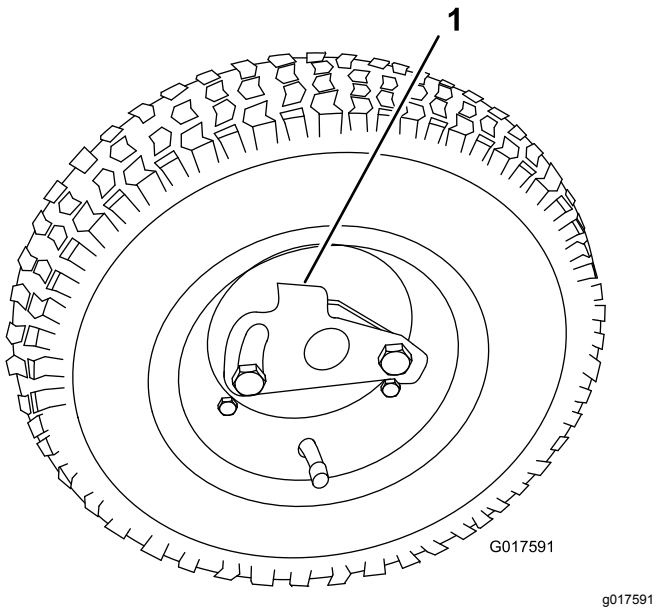

Figure 10

1. Locking clip

4. Rotate the wheel back and forth until it slides completely onto the axle and the locking clip is secured in the groove on the axle shaft.
5. Repeat the procedure on the opposite side of the machine.
6. Inflate the tires to 83 to 103 kPa (12 to 15 psi).
7. Carefully lower the machine off the kickstand.

5

Adjusting the Cutting Unit

No Parts Required

Procedure

Before operating the machine, complete the following adjustments:

- Leveling the Rear Drum to the Reel (page 37)
- Adjusting the Bedknife to the Reel (page 37)
- Adjusting the Height-of-Cut (page 38)
- Adjusting the Grass Shield Height (page 39)
- Adjusting the Cut-Off Bar (page 40)

6

Installing the CE Decals

Parts needed for this procedure:

1	Production-year decal
1	CE-mark decal

Procedure

If you use this machine in a country that complies to CE standards, apply the production-year decal and the CE-mark decal near the serial plate; refer to Figure 11.

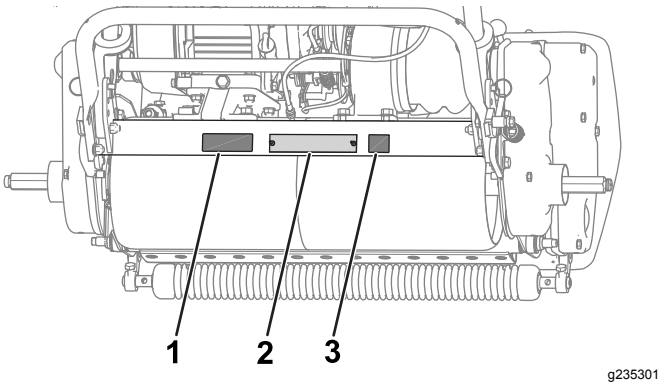

Figure 11

1. Production-year decal
2. Serial plate
3. CE-mark decal

7

Installing the Grass Basket

Parts needed for this procedure:

1	Grass basket

Procedure

Grasp the basket by the top lip and slide it onto the basket mounting rods (Figure 12).

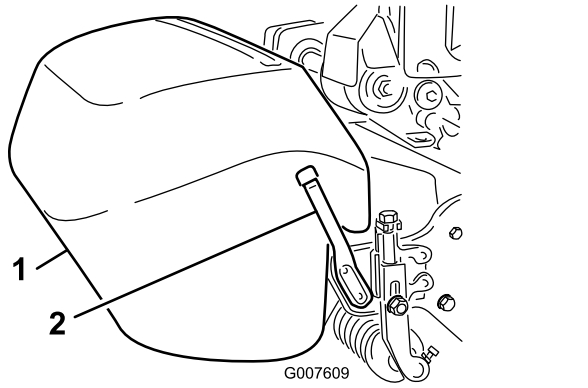

g007609

Figure 12

1. Grass basket
2. Basket mounting rod

Note: Model 04056 only— When you adjust the cutting unit to a higher height of cut, you can lower the basket by removing each basket mounting rod and installing each on the opposite side of the machine.

8

Breaking in the Machine

No Parts Required

Procedure

Only 8 hours of mowing operation is required for the break-in period.

The first several hours of operation are critical to future dependability of the machine. You must monitor the machine performance closely so that minor difficulties, which could lead to major problems, are noted and can be corrected. During the first few hours of operation, inspect the machine frequently for signs of oil leakage, loose fasteners, or any other malfunction.

Refer to the engine owner's manual for the recommended break-in-period oil change and maintenance procedures.

Product Overview

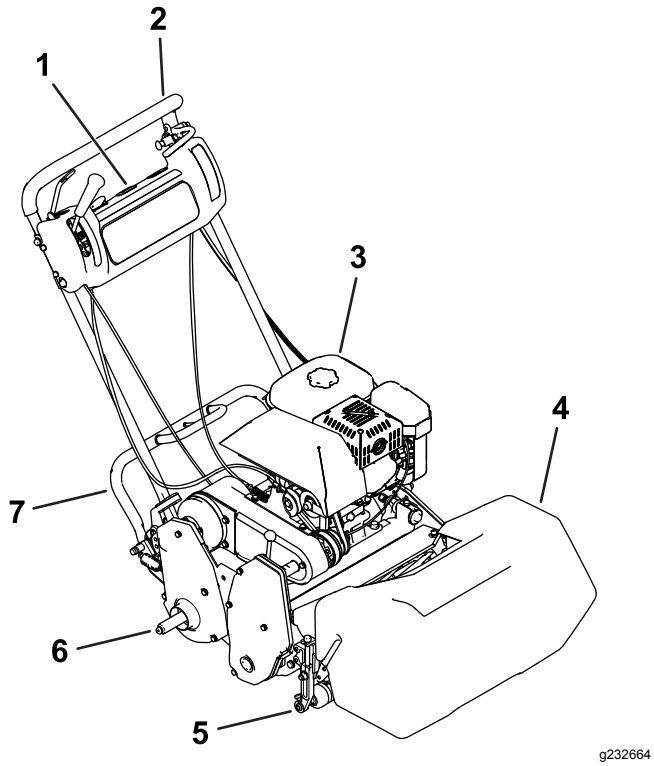

Figure 13

1. Control panel
2. Handle
3. Fuel tank
4. Grass basket
5. Cutting unit
6. Transport wheel axle
7. Kickstand

Controls

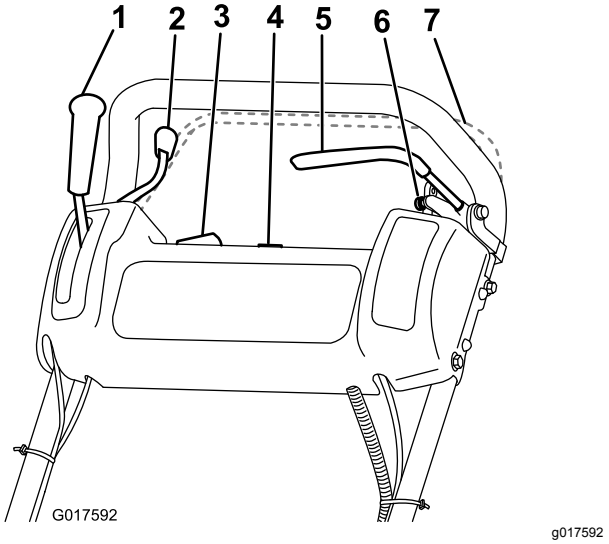

Figure 14

1. Traction-drive lever
2. Throttle control
3. On/Off switch
4. Hour meter
5. Service brake
6. Parking brake
7. Operator-presence control (optional)

Throttle Control

The throttle control (Figure 14) is located on the rear, right side of the control panel. The lever connects to and operates the throttle linkage to the carburetor. Refer to Specifications (page 15) for the engine speed.

Traction-Drive Lever

The traction-drive lever (Figure 14) is located on the front right side of the control panel. It has 2 positions: NEUTRAL and FORWARD. Pushing the lever forward engages the traction drive.

Service Brake

The service brake (Figure 15) is located on the top left, front side of the control panel. You can use the brake to slow or stop the machine.

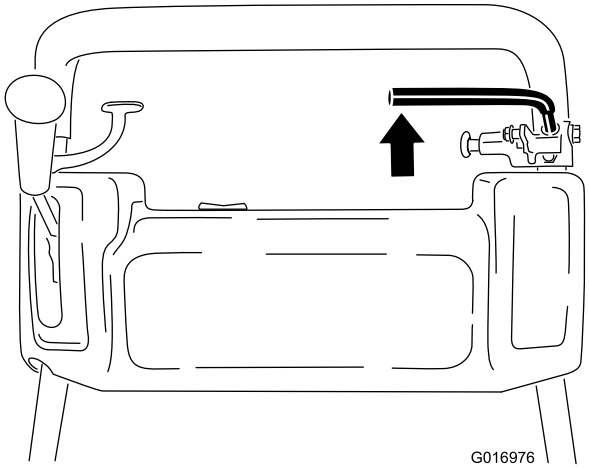

Figure 15

Parking Brake

The parking brake (Figure 16) is located at the base of the service brake. Fully engage the service brake and push the parking-brake knob to allow the service brake to rest on the parking-brake pin. Engage the service brake to release the parking brake. You must release the brake before you engage the traction drive.

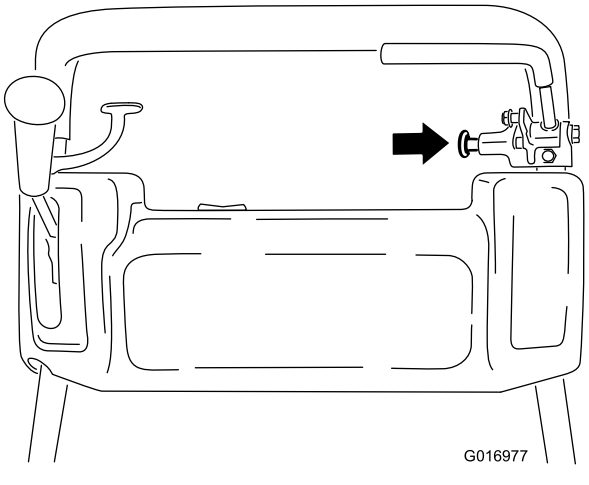

Figure 16

On/Off Switch

The On/Off switch (Figure 14) is located on the top of the control panel. Move the switch to the ON position to start the engine and the OFF position to shut off the engine.

Operator-Presence Control

Optional—If Equipped

If equipped, the operator-presence control (Figure 14) is located on the rear of the handle. Push the operator presence-control against the handle. If equipped, the operator-presence control must be engaged before moving the traction-drive lever. If you release the operator-presence control, the engine shuts off.

Reel-Drive Lever

The reel-drive lever (Figure 17) is located on the right front corner of the machine. The lever has 2 positions:

- ENGAGE—move the lever forward to engage the reel.
- DISENGAGE—move the lever rearward to disengage the reel.

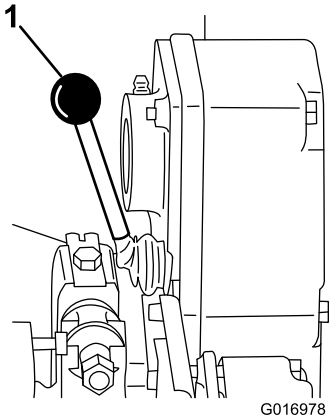

Figure 17

1. Reel-drive lever

Choke Lever

The choke lever (Figure 18) is located on the left front of the engine. The lever has 2 positions: RUN and CHOKE. Move the lever to the CHOKE position when starting a cold engine. After the engine starts, move the lever to the RUN position.

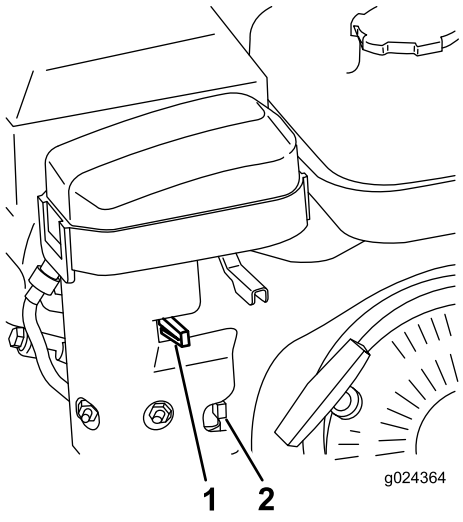

Figure 18

1. Choke lever
2. Fuel-shutoff valve

Fuel-Shutoff Valve

The fuel-shutoff valve (Figure 18 and Figure 19) is located on the left front of the engine near the choke lever. The valve has 2 positions: CLOSED and OPEN. Move the lever up to the CLOSED position when you store or transport the machine. Open the valve before you start the engine by rotating the lever down.

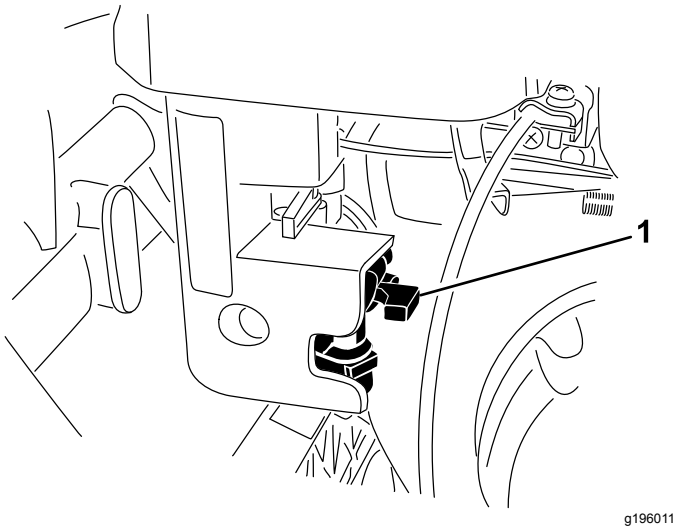

Figure 19

1. Fuel-shutoff valve—CLOSED position

Recoil-Starter Handle

Pull the recoil-starter handle (Figure 20) to start the engine.

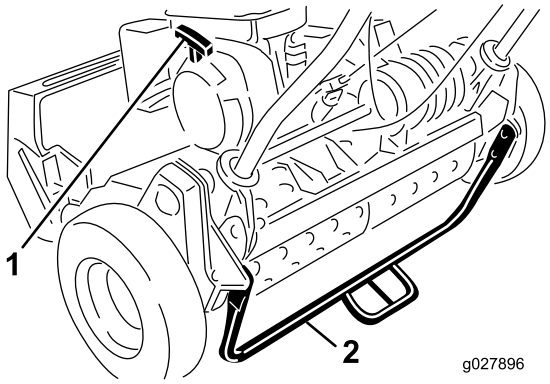

g027896

Figure 20

1. Recoil-starter handle
2. Kickstand

Kickstand

The kickstand (Figure 20) is mounted to the rear of the machine. Use the kickstand when you install or remove the transport wheels or the cutting unit.

Specifications

Note: Specifications and design are subject to change without notice.

	Model 04054	Model 04055	Model 04056
Width	84 cm (33 inches)	91 cm (36 inches)	104 cm (41 inches)
Height	114 cm (45 inches)	114 cm (45 inches)	122 cm (48 inches)
Length with basket	122 cm (48 inches)	122 cm (48 inches)	150 cm (59 inches)
Dry weight (with basket and Wiehle roller; without wheels or grooming reel)	97 kg (216 lb)	100 kg (220 lb)	105 kg (232 lb)
Width of cut	46 cm (18 inches)	53 cm (21 inches)	66 cm (26 inches)
Height of cut	1.6 mm to 31.8 mm (0.063 to 1.25 inches)	1.6 mm to 31.8 mm (0.063 to 1.25 inches)	3.1 mm to 31.7 mm (0.125 to 1.25 inches)
Clip	3.3 mm (0.13 inches)	4.3 mm (0.16 inch)	5.8 mm (0.23 inch)
Engine speed	Low idle: 1,565 ±150 rpm; High idle: 3,375 ±100 rpm	Low idle: 1,565 ±150 rpm; High idle: 3,375 ±100 rpm	Low idle: 1,565 ±150 rpm; High idle: 3,375 ±100 rpm

Attachments/Accessories

A selection of Toro approved attachments and accessories is available for use with the machine to enhance and expand its capabilities. Contact your Authorized Service Dealer or authorized Toro distributor or go to www.Toro.com for a list of all approved attachments and accessories.

To ensure optimum performance and continued safety certification of the machine, use only genuine Toro replacement parts and accessories. Replacement parts and accessories made by other manufacturers could be dangerous, and such use could void the product warranty.

Operation

Before Operation

Before Operation Safety

General Safety

- Never allow children or untrained people to operate or service the machine. Local regulations may restrict the age of the operator. The owner is responsible for training all operators and mechanics.
- Become familiar with the safe operation of the equipment, operator controls, and safety signs. Know how to shut off the engine quickly.
- Check that operator-presence control (if equipped), safety switches, and shields are attached and functioning properly. Do not operate the machine unless they are functioning properly.
- Inspect the area where you will use the machine, and remove all objects that could interfere with the operation of the machine or that the machine could throw.
- Evaluate the terrain to determine what accessories and attachments are needed to properly and safely perform the job.

Fuel Safety

- Use extreme care in handling fuel. It is flammable and its vapors are explosive
- Extinguish all cigarettes, cigars, pipes, and other sources of ignition.
- Do not remove the fuel cap or fill the fuel tank while the engine is running or hot.
- Do not add or drain the fuel in an enclosed space.
- Do not store the machine or fuel container where there is an open flame, spark, or pilot light, such as on a water heater or other appliance.
- If you spill fuel, do not attempt to start the engine; avoid creating any source of ignition until the fuel vapors have dissipated.

Performing Daily Maintenance

Perform the daily maintenance procedures; refer to Daily Maintenance Checklist (page 25).

Checking the Engine-Oil Level

Check the engine-oil level before each use or every 8 operating hours, refer to Checking the Engine-Oil Level (page 28).

Fuel Specifications

Fuel tank capacity: 2.7 L (0.71 US gallons)

Recommended fuel: Unleaded gasoline with an octane rating of 87 or higher ((R+M)/2 rating method)

Ethanol: Gasoline with up to 10% ethanol (gasohol) or 15% MTBE (methyl tertiary butyl ether) by volume is acceptable. Ethanol and MTBE are not the same. Gasoline with 15% ethanol (E15) by volume is not approved for use.

- **Never use gasoline that contains more than 10% ethanol by volume**, such as E15 (contains 15% ethanol), E20 (contains 20% ethanol), or E85 (contains up to 85% ethanol).
- **Do not** use gasoline containing methanol.
- **Do not** store fuel either in the fuel tank or fuel containers over the winter unless a fuel stabilizer is used.
- **Do not** add oil to gasoline.
- For best results, use only clean, fresh (less than 30 days old) fuel.
- Using unapproved gasoline may cause performance problems and/or engine damage, which may not be covered under the warranty.

Filling the Fuel Tank

⚠ DANGER

In certain conditions, fuel is extremely flammable and highly explosive. A fire or explosion from fuel can burn you and others and can damage property.

- **Fill the fuel tank outdoors, in an open area, when the engine is cold. Wipe up any fuel that spills.**
- **Never fill the fuel tank inside an enclosed trailer.**
- **Do not fill the fuel tank completely full. Add fuel to the fuel tank until the level is 6 to 13 mm (1/4 to 1/2 inch) below the bottom of the filler neck. This empty space in the tank allows fuel to expand.**
- **Never smoke when handling fuel, and stay away from an open flame or where fuel fumes may be ignited by a spark.**
- **Store fuel in an approved container and keep it out of the reach of children. Never buy more than a 30-day supply of fuel.**
- **Do not operate without entire exhaust system in place and in proper working condition.**

⚠ DANGER

In certain conditions during fueling, static electricity can be released, causing a spark which can ignite the fuel vapors. A fire or explosion from fuel can burn you and others and can damage property.

- **Always place fuel containers on the ground away from your vehicle before filling.**
- **Do not fill fuel containers inside a vehicle or on a truck or trailer bed because interior carpets or plastic truck-bed liners may insulate the container and slow the loss of any static charge.**
- **When practical, remove equipment from the truck or trailer and fuel it on the ground. If this is not possible, then fuel such equipment with a portable container rather than from a fuel-dispenser nozzle.**
- **If you must use a fuel-dispenser nozzle, keep the nozzle in contact with the rim of the fuel tank or container opening at all times until fueling is complete.**

⚠ WARNING

Fuel is harmful or fatal if swallowed. Long-term exposure to vapors can cause serious injury and illness.

- **Avoid prolonged breathing of vapors.**
- **Keep your face away from the nozzle and fuel tank or conditioner bottle opening.**
- **Avoid contact with skin; wash off spills with soap and water.**

1. Clean around the fuel-tank cap and remove the cap from the tank (Figure 21). Fill the fuel tank no higher than to the bottom of the filter screen.

   Important: **Do not overfill the tank with fuel.**

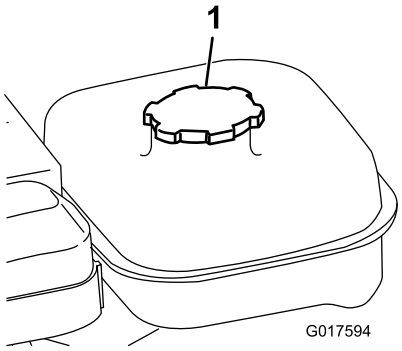

g017594

Figure 21

1. Fuel-tank cap

2. Install the fuel-tank cap and wipe up any spilled fuel.

Setting the Machine to Match Turf Conditions

Use the following table to set the machine to match turf conditions.

Greensmower Cutting Unit Setup Matrix				
Bedbars: Standard and Optional				
Part Number	**Description**	**Mower**	**Aggressiveness**	**Comments**
120-2682-03	Standard	Greensmaster 800	Less	Standard Greensmaster 800
112-9281-01	Standard	Greensmaster 1000	Less	Standard Greensmaster 1000
112-9279-03	Aggressive	Greensmaster 1000	More	
112-9280-01	Standard	Greensmaster 1600	Less	Standard Greensmaster 1600
110-9278-03	Aggressive	Greensmaster 1600	More	
Bedknives: Standard and Optional				
Part Number	**Description**	**Mower**	**Height of Cut Range**	**Comments**
98-7261	Microcut	Greensmaster 800	1.57–3.1 mm (0.062–0.125 inch)	
117-1530	EdgeMax Microcut	Greensmaster 800	1.57–3.1 mm (0.062–0.125 inch)	Standard Greensmaster 800
98-7260	Tournament	Greensmaster 800	3.1–6.0 mm (0.125–0.250 inch)	
117-1532	EdgeMax Tournament	Greensmaster 800	3.1–6.0 mm (0.125–0.250 inch)	Longer wearing
110-2300	Extended Microcut	Greensmaster 800	1.57–3.1 mm (0.062–0.125 inch)	Less aggressive
110-2301	Low cut	Greensmaster 800	6.0 mm (0.250 inch) and up	
93-4262	Microcut	Greensmaster 1000	1.57–3.1 mm (0.062–0.125 inch)	
115-1880	EdgeMax Microcut	Greensmaster 1000	1.57–3.1 mm (0.062–0.125 inch)	Standard Greensmaster 1000
93-4263	Tournament	Greensmaster 1000	3.1–6.0 mm (0.125–0.250 inch)	
115-1881	EdgeMax Tournament	Greensmaster 1000	3.1–6.0 mm (0.125–0.250 inch)	Longer wearing
93-4264	Low cut	Greensmaster 1000	6.0 mm (0.250 inch) and up	
108-4303	Extended Microcut	Greensmaster 1000	1.57–3.1 mm (0.062–0.125 inch)	Less aggressive
112-9275	Microcut	Greensmaster 1600	Less than 3.1 mm (0.125 inch)	
94-5885	Tournament	Greensmaster 1600	3.1–6.0 mm (0.125–0.250 inch)	
104-2646	High cut	Greensmaster 1600	6.0 mm (0.250 inch) and up	Tees
93-9015	Low cut	Greensmaster 1600	6.0 mm (0.250 inch) and up	Standard Greensmaster 1600
117-1548	Edgemax Microcut	Greensmaster 1600	1.52 to 3.1 mm (0.060 to 0.122)	Longer wearing - Standard Greensmaster 1610

Rollers: Standard and Optional				
Part Number	**Description**	**Mower**	**Diameter/Material**	**Comments**
99-6240	Narrow Wiehle	Greensmaster 800	50.8 mm (2.0 inches) Aluminum	Standard, 0.20 inch spacing
99-6241	Narrow Wiehle	Greensmaster 1000	50.8 mm (2.0 inches) Aluminum	Standard, 0.20 inch spacing
88-6790	Wide Wiehle	Greensmaster 1000	50.8 mm (2.0 inches) Aluminum	More penetration, 0.43 inch spacing
104-2642	Full roller	Greensmaster 1000	50.8 mm (2.0 inches) Steel	Least penetration
71-1550	Wiehle roller	Greensmaster 1000	50.8 mm (2.0 inches) Cast Iron	More penetration, 0.43 inch spacing
93-9045	Wiehle roller	Greensmaster 1000	63.5 mm (2.5 inches) Aluminum	24 inches wide for edge support
52-3590	Swaged roller	Greensmaster 1000	63.5 mm (2.5 inches) Aluminum	
93-9039	Narrow Wiehle	Greensmaster 1600	63.5 mm (2.5 inches) Aluminum	Standard
95-0930	Full roller	Greensmaster 1600	63.5 mm (2.5 inches) Steel	Least penetration

Clip Table for Fixed-Head Walk-Behind Greensmowers						
Model	Standard			Clip Kit 65–9000		
	Standard reel	Optional reel		Standard reel	Optional reel	
04054	14–blade 3.3 mm (0.13 inch)	11–blade 4.1 mm (0.16 inch)		14–blade 4.8 mm (0.19 inch)	11–blade 6.4 mm (0.25 inch)	
04055	11–blade 4.1 mm (0.16 inch)	14–blade 3.3 mm (0.13 inch)	8–blade 5.8 mm (0.23 inch)	11–blade 6.4 mm (0.25 inch)	14–blade 4.8 mm (0.19 inch)	8–blade 8.6 mm (0.34 inch)
04056	8–blade 5.8 mm (0.23 inch)	11–blade 4.1 mm (0.16 inch)		8–blade 8.6 mm (0.34 inch)	11–blade 6.4 mm (0.25 inch)	
Ground speed	5.39 km/h (3.35 mph)					

Clip Table for Fixed-Head Walk-Behind Greensmowers						
Model	Traction Kit 115–1886			Clip and Traction Kits		
	Standard reel	Optional reel		Standard reel	Optional reel	
04054	14–blade 3.0 mm (0.12 inch)	11–blade 3.8 mm (0.15 inch)		14–blade 4.3 mm (0.17 inch)	11–blade 5.6 mm (0.22 inch)	
04055	11–blade 3.8 mm (0.15 inch)	14–blade 3.0 mm (0.12 inch)	8–blade 5.1 mm (0.20 inch)	11–blade 5.6 mm (0.22 inch)	14–blade 4.3 mm (0.17 inch)	8–blade 7.6 mm (0.30 inch)
04056	8–blade 5.1 mm (0.20 inch)	11–blade 3.8 mm (0.15 inch)		8–blade 7.6 mm (0.30 inch)	11–blade 5.6 mm (0.22 inch)	
Ground speed	4.80 km/h (2.98 mph)					

Checking the Interlock-Switch Operation

⚠ CAUTION

If the safety interlock switches are disconnected or damaged, the machine could operate unexpectedly causing personal injury.

- **Do not tamper with the interlock switches.**
- **Check the operation of the interlock switches daily and replace any damaged switches before operating the machine.**

1. Push the kickstand down with your foot and pull up and back on the handle to raise the wheels off the ground.
2. Place the traction lever into the ENGAGE position and the engine controls in the starting position.
3. Attempt to start the engine.

   The engine should not start. If the engine starts, the interlock switch needs service. Correct the problem before operating the machine. Refer to Servicing the Traction-Interlock Switch (page 31)
4. Carefully lift up on the handle to release the kickstand.

Transporting the Machine to a Job Site

Transporting the Machine Using Transport Wheels

Use the transport wheels to transport the machine a shorter distance.

1. Install the transport wheels; refer to 4 Installing the Transport Wheels (page 10)
2. Ensure that the traction and reel-drive controls are in the NEUTRAL position.
3. Start the engine; refer to Starting the Engine (page 21)
4. Set the throttle control to SLOW, tip the front of the machine up, gradually engage the traction drive, and slowly increase the engine speed.
5. Adjust the throttle to operate the mower at the desired ground speed and transport the machine to the desired destination.

Transporting the Machine Using a Trailer

Use a trailer to transport the machine a considerable distance. Use caution while loading and unloading the machine onto the trailer.

1. Carefully drive the machine onto the trailer.
2. Shut off the engine and engage the parking brake.
3. Securely fasten the machine to the trailer.

Note: The Toro Trans Pro trailer can be used to transport the machine. For instructions on loading the trailer, refer to your trailer *Operator's Manual*.

Important: **Do not run the engine while transporting it on a trailer because damage can occur to the machine.**

Hauling the Machine

- Use care when loading or unloading the machine into a trailer or a truck.
- Use a full-width ramp for loading the machine into a trailer or truck.
- Tie the machine down securely.

Removing the Transport Wheels

1. Return the traction control lever to the NEUTRAL position, the throttle to the SLOW position, and shut off the engine.
2. Push the kickstand down with your foot and pull up on the handle support until the kickstand has rotated forward, over center.
3. Remove the transport wheels by pushing the wheel locking clips out of the hex-shaft grooves.
4. Carefully lower the machine off of the kickstand by pushing forward slowly or by lifting the lower handle support, allowing the kickstand to spring back to the STORAGE position.

During Operation

During Operation Safety

General Safety

- The owner/operator can prevent and is responsible for accidents that may cause personal injury or property damage.
- Wear appropriate clothing, including eye protection; long pants; slip-resistant, substantial

footwear; and hearing protection. Tie back long hair, secure loose clothing, and do not wear loose jewelry.

- Use your full attention while operating the machine. Do not engage in any activity that causes distractions; otherwise, injury or property damage may occur.
- Do not operate the machine while ill, tired, or under the influence of alcohol or drugs. Keep bystanders, especially small children, out of the operating area. Shut off the engine if anyone enters the area.
- Do not run an engine in an enclosed area where exhaust gases can collect.
- Operate the machine only in good visibility and appropriate weather conditions. Do not operate the machine when there is the risk of lightning.
- Before you start the engine, disengage all blade-attachment clutches, shift into neutral, and engage the parking brake.
- Watch for holes, ruts, bumps, rocks, or other hidden objects. Uneven terrain could cause a slip-and-fall accident.
- Use extreme care when approaching blind corners, shrubs, trees, or other objects that may block your view.
- Always stand in the operating position (behind the handle) when starting and operating the machine.
- Ensure that the grass basket is in place while mowing. Shut off the engine before emptying the basket.
- Never leave a running machine unattended.
- Do not touch the engine, muffler, or exhaust pipe while the engine is running or soon after it has shut off because these areas could be hot enough to cause burns.
- Shut off the engine and disengage the drive to the cutting unit in the following situations:
  - Before fueling
  - Before clearing blockages
  - Before removing the grass basket
  - Before checking, cleaning, or maintaining the cutting unit
  - After striking a foreign object or if an abnormal vibration occurs. Inspect the cutting unit for damage and make repairs before starting and operating the machine
  - Before leaving the operating position
- Disengage the drive to the cutting unit when transporting or not using the machine.
- Watch out for traffic when crossing or near roadways.
- Stop the blades whenever you are not mowing.
- Do not change the engine governor settings or overspeed the engine. Operating the engine at excessive speed may increase the hazard of personal injury.
- Use accessories and attachments approved by The Toro® Company only.

Slope Safety

- Slopes are a major factor related to loss of control and rollover accidents, which can result in severe injury or death. The operator is responsible for safe slope operation. Operating the machine on any slope requires extra caution.
- Evaluate the site conditions to determine if the slope is safe for machine operation including surveying the site. Always use common sense and good judgment when performing this survey.
- Review the slope instructions, listed below, for operating the machine on slopes and review the conditions in which the machine is being operated to determine whether the machine can be operated in the conditions on that day and at that site. Changes in the terrain can result in a change in slope operation for the machine.
  - Avoid starting, stopping, or turning the machine on slopes. Avoid making sudden changes in speed or direction. Make turns slowly and gradually.
  - Do not operate a machine under any conditions where traction, steering, or stability is in question.
  - Remove or mark obstructions such as ditches, holes, ruts, bumps, rocks, or other hidden hazards. Tall grass can hide obstructions. Uneven terrain could overturn the machine.
  - Be aware that operating the machine on wet grass, across slopes, or downhill may cause the machine to lose traction. Loss of traction may result in sliding and a loss of braking and steering.
  - Use extreme caution when operating the machine near dropoffs, ditches, embankments, water hazards, or other hazards. The machine could suddenly roll over if part of the traction goes over the edge or the edge caves in. Establish a safety area between the machine and any hazard.
  - Identify hazards at the base of the slope.

Starting the Engine

Note: For illustrations and descriptions of the controls referenced in this section, refer to Controls (page 13).

Note: Ensure that the spark-plug wire is installed on the spark plug.

1. Ensure that the traction and reel drive levers are in the DISENGAGED position.

   Note: The engine will not start if the traction lever is in the ENGAGED position.
2. Ensure that the fuel-shutoff valve is open.
3. Move the On/Off switch to the ON position.
4. Move the throttle control to the FAST position.
5. Move the choke lever halfway between the CHOKE and RUN positions when starting a cold engine.

   Note: The choke may not be required when starting a warm engine.
6. Pull the recoil-start handle out until positive engagement results, then pull it vigorously to start the engine.

   Important: **Do not pull the recoil rope to its limit or let go of the starter handle when the rope is pulled out; the rope may break or the recoil assembly may be damaged.**
7. Move the choke lever to the RUN position as the engine warms up.

Shutting Off the Engine

1. Move the traction and reel drive controls to the DISENGAGED position.
2. Move the throttle control to the SLOW position.
3. Move the On/Off switch to the OFF position.
4. Close the fuel-shutoff valve before you store or transport the machine

Operating Tips

Important: **Grass clippings act as a lubricant when mowing. Operating the cutting unit excessively without grass clippings can damage the cutting unit.**

- Mow the greens in a straight back-and-forth direction across the green.
- Avoid circular mowing or turning the machine on the greens areas to prevent scuffing.
- Turn the machine off the green by raising the cutting reel (pushing the handle down) and turning on the traction drum.
- Mow at a normal walking pace. Fast speeds saves little time and results in an inferior mowing job.
- To assist in maintaining a straight line across the green and to keep the machine an equal distance from the edge of the previous cut, use the alignment stripes on the basket (Figure 22).

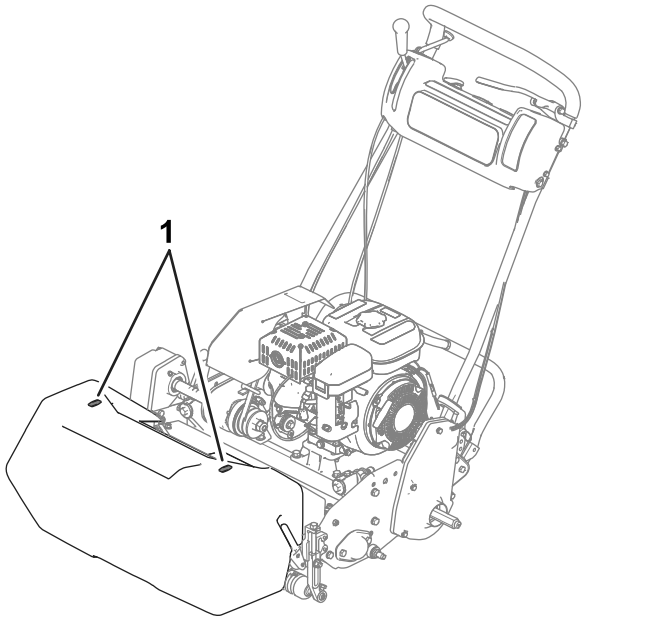

Figure 22

1. Alignment stripes

Operating the Machine in Low Light Conditions

Use the LED Light Kit when you operate the machine in low light conditions; contact your authorized Toro distributor.

Important: **Do not use other light systems with this machine, as they will not operate properly with the engine AC output.**

Operating the Controls while Mowing

1. Start the engine, set the throttle to a reduced speed, push down on the handle to raise the cutting unit, press the operator-presence control, move the traction and reel-drive engagement lever to the FORWARD (transport) position, and transport the machine onto the collar of the green (Figure 23).
2. Move the lever to the NEUTRAL position (Figure 23).

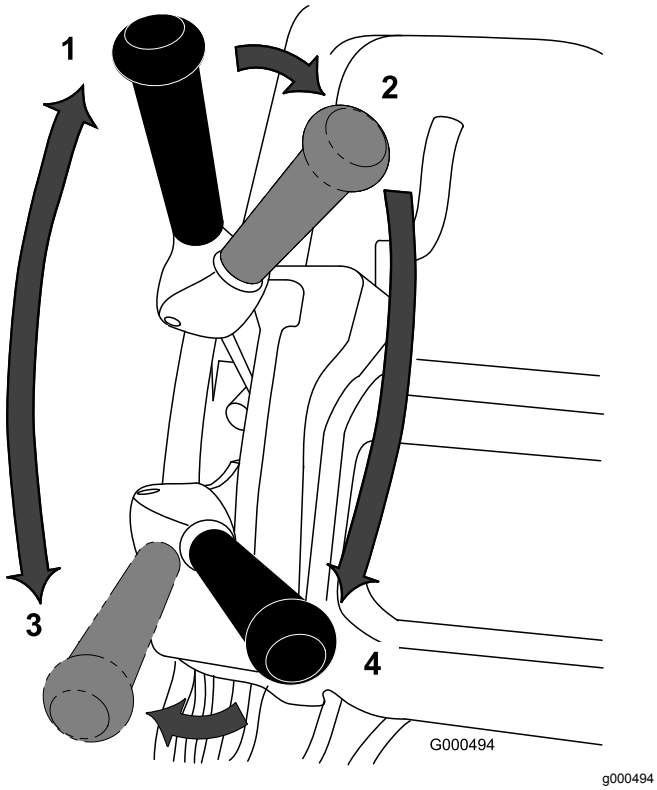

Figure 23

Traction and Reel-Drive Lever Positions

1. NEUTRAL
2. Traction—NEUTRAL and reel drive—DISENGAGE
3. Traction—FORWARD (transport)
4. Traction—FORWARD and reel drive—ENGAGE

3. Move the lever to the traction—NEUTRAL and reel drive—DISENGAGE position (Figure 23).
4. Move the lever to the traction—FORWARD and reel drive—ENGAGE position (Figure 23), increase the throttle speed until the machine is traveling at the desired ground speed, drive the machine onto the green, lower the cutting unit to the ground, and begin mowing.

Operating the Controls after Mowing

1. Drive off the green, move the reel drive and traction control levers to the DISENGAGED position, and shut off the engine.
2. Empty the grass basket of clippings, install the grass basket on the mower, and transport the machine to storage.

After Operation

After Operation Safety

General Safety

- Reduce the throttle setting before shutting off the engine and, if the engine has a fuel-shutoff valve, turn off the valve after mowing.
- Clean grass and debris from the machine to help prevent fires. Clean up oil or fuel spills.

Transporting the Machine

After mowing, transport the machine away from the job site; refer to Transporting the Machine Using Transport Wheels (page 20) or Transporting the Machine Using a Trailer (page 20) and Hauling the Machine (page 20).

Maintenance

⚠ WARNING

Failing to properly maintain the machine could result in premature failure of machine systems, causing possible harm to you or bystanders.

Keep the machine well maintained and in good working order as indicated in these instructions.

Note: Determine the left and right sides of the machine from the normal operating position.

Important: **Do not tip the machine at an angle greater than 25°. Tipping the machine beyond 25 ° leads to oil leaking into the combustion chamber and/or fuel leaking out of the fuel-tank cap.**

⚠ CAUTION

If you leave the key in the ignition switch, someone could accidently start the engine and seriously injure you or other bystanders.

Remove the key from the ignition and disconnect the battery before you do any maintenance.

Recommended Maintenance Schedule(s)

Maintenance Service Interval	Maintenance Procedure
After the first 20 hours	• After the first 20 hours—Change the engine oil. • Change the engine oil.
Before each use or daily	• Check the interlock switch operation. • Before each use or daily—Check the engine-oil level. • Check the engine-oil level.
Every 25 hours	• Grease the machine. (Grease the fittings immediately after every washing regardless of the interval listed.)
Every 50 hours	• Change the engine oil (more frequently in dusty or dirty conditions). • Change the engine oil. • Clean and oil the foam air-cleaner element (more often in dirty or dusty conditions).
Every 100 hours	• Replace the paper air-filter element (more often in dirty or dusty conditions). • Check the spark plug.
Every 1,000 hours	• Replace the fuel line. • Replace the breather hose. • Check the transmission-drive belts. • Check the transmission bearings.

Important: **Refer to your engine owner's manual for additional maintenance procedures.**

Daily Maintenance Checklist

Important: **Duplicate this page for routine use.**

Maintenance Check Item	For the week of:						
	Mon.	Tues.	Wed.	Thurs.	Fri.	Sat.	Sun.
Check the safety interlock operation.							
Check the parking brake operation.							
Check the fuel level.							
Check the engine oil level.							
Check the air filter.							
Clean the engine cooling fins.							
Check for unusual engine noises.							
Check for unusual operating noises.							
Check the reel-to-bedknife adjustment.							
Check the height-of-cut adjustment.							
Grease all fittings.							
Touch up damaged paint.							

Notation for Areas of Concern

Inspection performed by:		
Item	**Date**	**Information**

Pre-Maintenance Procedures

Maintenance Safety

- Disengage the drives and the cutting unit, engage the parking brake, shut off the engine, and disconnect the spark-plug wire. Wait for all movement to stop before adjusting, cleaning, or repairing the machine.
- If the engine must be running to perform a maintenance adjustment, keep your hands, feet, clothing, and any parts of the body away from the cutting unit, attachments, and any moving parts. Keep bystanders away.
- Keep all parts in good working condition and all hydraulic fittings tight. Replace all worn, damaged, or missing parts and decals. Keep all fasteners tight to ensure that the machine is in safe working condition.
- Check the grass catcher components frequently and replace them when necessary.
- Clean grass and debris from the cutting unit, drives, mufflers, cooling screens, and the engine to help prevent fires. Clean up oil or fuel spills.
- Carefully release pressure from components with stored energy.
- Replace faulty silencers.
- If major repairs are ever needed or if assistance is desired, contact an authorized Toro distributor.
- To ensure safe, optimum performance of the machine, use only genuine Toro replacement parts. Replacement parts made by other manufacturers could be dangerous, and such use could void the product warranty.

Lubrication

Greasing the Machine

Service Interval: Every 25 hours

Lubricate the 12 grease fittings on the mower using a No. 2 lithium grease. For best results, use a hand-operated grease gun.

The grease fitting locations are as follows:

- 2 on the front roller (Figure 24)
- 2 on the reel bearings (Figure 24)
- 2 on the drum axles (Figure 25)
- 3 on the differential (Figure 25)
- 2 on the reel countershaft bearings (Figure 26)
- 1 on the belt idler pivots (Figure 27).

1. Wipe each grease fitting with a clean rag.
2. Pump grease into each fitting.

   Important: **Do not apply too much pressure or the grease seals may become permanently damaged.**
3. Wipe off any excess grease.

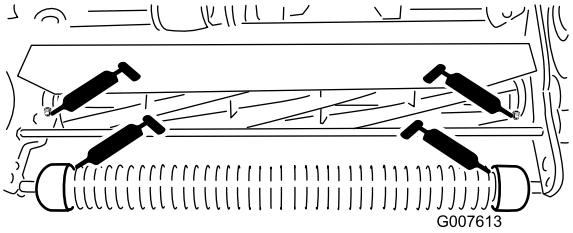

Figure 24

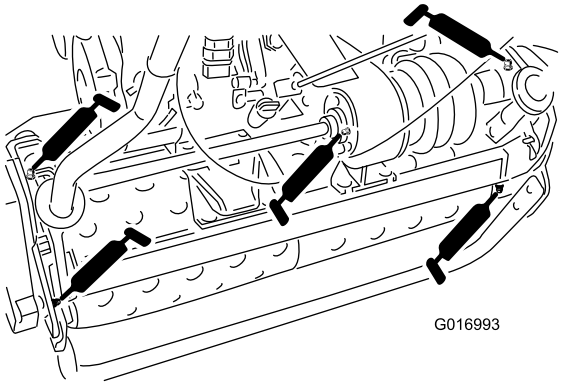

Figure 25

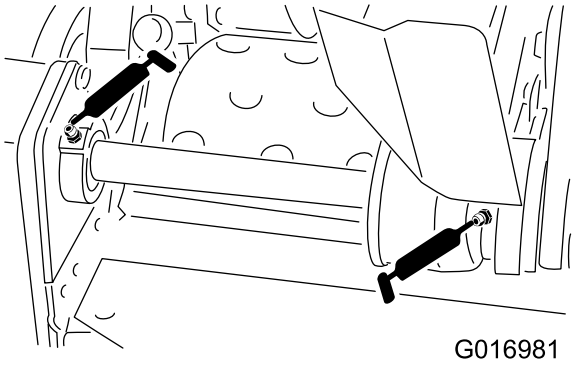

Figure 26

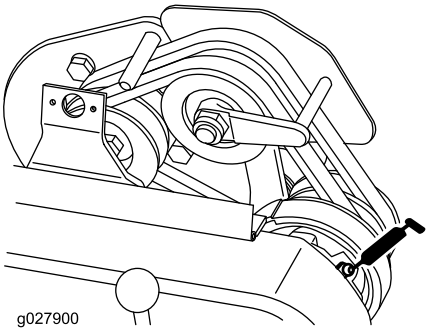

Figure 27

Engine Maintenance

Engine Safety

- Fuel is flammable and explosive, and can cause personal injury.
- Check all fuel lines for tightness and wear regularly. Tighten or repair them as needed.
- Tipping the machine may cause the fuel to leak. Do not tip the machine at an angle greater than 25°. If fuel comes in contact with the fuel cap, replace the cap.
- Run the engine dry or remove the fuel with a hand pump; never siphon the fuel. If you must drain the fuel tank, do it outdoors.

Servicing the Engine Oil

Service Interval: After the first 20 hours
Before each use or daily
Every 50 hours

Fill the crankcase with approximately 0.6 L (20 fl oz) of the proper viscosity oil before starting. The engine uses a high-quality oil that has the American Petroleum Institute (API) service classification of SE or higher. Select the proper oil viscosity (weight) based on the ambient temperature. Figure 28 illustrates the temperature/viscosity recommendations.

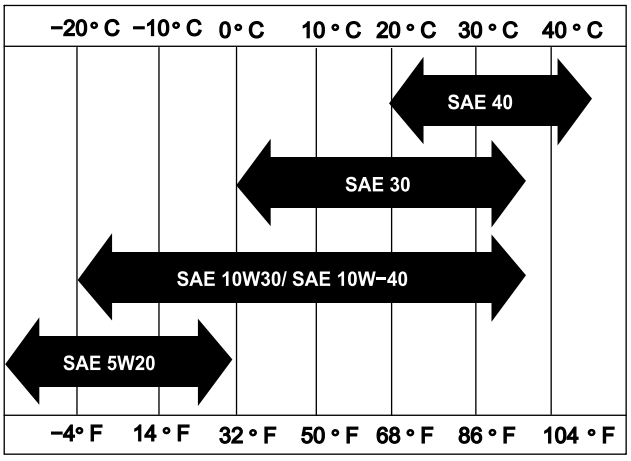

Figure 28

Note: Multi-grade oils (5W-20, 10W-30 and 10W-40) increase oil consumption. Check the engine-oil level more frequently when you use these oils.

Checking the Engine-Oil Level

Service Interval: Before each use or daily

The ideal time to check the engine-oil level is when the engine is cool or before you have started the engine for the day. If you have already ran the engine, allow the oil to drain back down to the sump for at least 10 minutes before you check the engine-oil level.

1. Remove the transport wheels (if installed).
2. Position the machine so that the engine is level, and clean the area around the oil-level gauge (Figure 29).

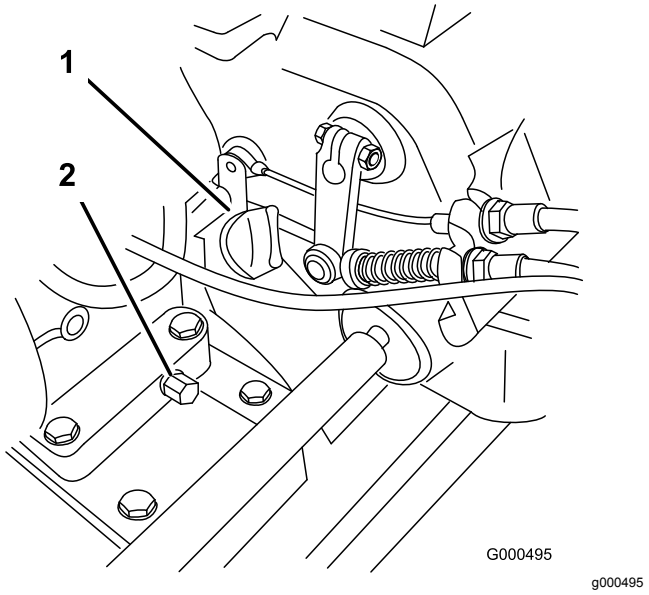

Figure 29

1. Oil-level dipstick
2. Drain plug

3. Remove the oil-level dipstick by rotating it counterclockwise (Figure 29).
4. Wipe the dipstick and insert it into the filler port, but do not screw the dipstick into the port.
5. Remove the dipstick and check the level of the oil.
6. If the level is low, add only enough oil to raise the level until it is between the “H” and “L” marks on the dipstick (Figure 30). Check the level of the oil.

Important: **Do not overfill the crankcase.**

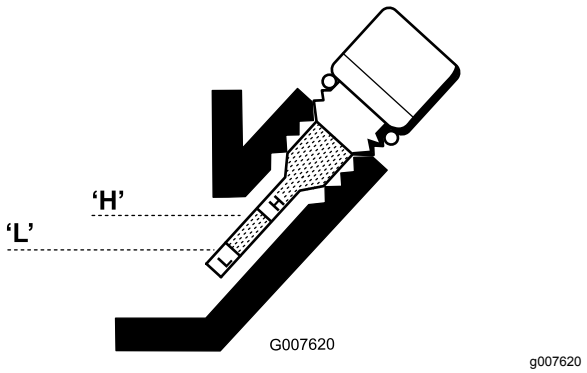

Figure 30

7. Install the dipstick and wipe up any oil that may have spilled.

Changing the Engine Oil

Service Interval: After the first 20 hours

Every 50 hours

1. Start and run the engine for a few minutes to warm the engine oil.
2. At the rear of the machine, place a drain pan under the drain plug (Figure 29). Loosen the drain plug.
3. Push down on the handle to tip the machine and engine backward, allowing all the oil to run into the drain pan.

   Important: **Do not tip the machine at an angle greater than 25°. Tipping the machine beyond 25° leads to oil leaking into the combustion chamber and/or fuel leaking out of the fuel-tank cap.**
4. Install the drain plug and refill the crankcase with the specified oil.
5. Torque the drain plug to 20 to 23 N·m (15 to 17 ft-lbs).
6. Wipe up any spilled oil.
7. Dispose of the used oil properly. Recycle as per local codes.

Servicing the Air Cleaner

Service Interval: Every 50 hours—Clean and oil the foam air-cleaner element (more often in dirty or dusty conditions).

Every 100 hours—Replace the paper air-filter element (more often in dirty or dusty conditions).

Important: **Service the air cleaner more often in dirty or dusty conditions**

1. Ensure that the spark-plug wire is removed from the spark plug.
2. Remove the wing nut that secures the air-cleaner cover, and remove the cover (Figure 31).

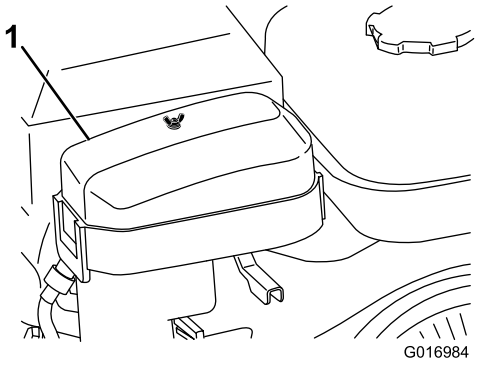

g016984

Figure 31

1. Air-cleaner cover

3. Clean the cover.
4. If the foam element is dirty, remove it from the paper element (Figure 32) and clean it as follows:

   A. Wash the foam element in a solution of liquid soap and warm water. Squeeze it to remove dirt, but do not twist it, as the foam may tear.

   B. Dry the foam element by wrapping it in a clean rag. Squeeze the rag and foam element to dry it, but do not twist it, as the foam may tear.

   C. Saturate the foam element with clean engine oil. Squeeze the element to remove excess oil and to distribute the oil.

   Note: A foam element that is damp with oil is desirable.

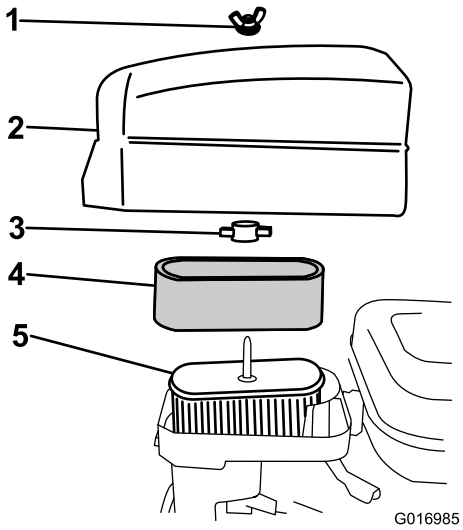

g016985

Figure 32

1. Wing nut
2. Air-cleaner cover
3. Plastic wing nut
4. Foam element
5. Paper element

5. Check the condition of the paper element. Clean it by gently tapping or replace it as necessary.

   Important: **Do not use compressed air to clean the paper element.**

6. Install the foam element, paper element, and air-cleaner cover.

   Important: **Do not operate the engine without the air-cleaner element, as extreme engine wear and damage can result.**

Servicing the Spark Plug

Service Interval: Every 100 hours

Use an NGK BR6HS spark plug or equivalent. The correct air gap is 0.6 to 0.7 mm (0.024 to 0.028 inch).

1. Pull the molded wire off the spark plug (Figure 33).

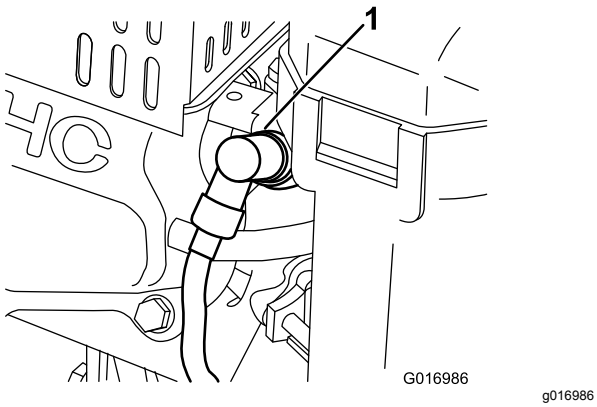

Figure 33

1. Spark-plug wire

2. Clean around the spark plug and remove the plug from the cylinder head.

   Important: **Replace a cracked, fouled, or dirty spark plug. Do not sand blast, scrape, or clean the electrodes because engine damage could result from grit entering the cylinder.**

3. Set the air gap at 0.6 to 0.7 mm (0.024 to 0.028 inch) as shown in Figure 34. Install the correctly gapped spark plug and tighten it firmly to 23 N·m (17 ft-lb).

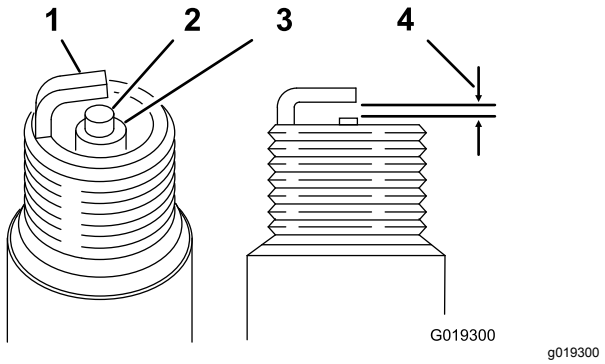

Figure 34

1. Center-electrode insulator
2. Side electrode
3. Air gap—0.6 to 0.7 mm (0.024 to 0.028 inch)

Fuel System Maintenance

Cleaning the Fuel Filter

1. Close the fuel-shutoff valve and unscrew the sediment bowl from the carburetor body (Figure 35).

   Note: Using a 17 mm, 12-point socket over the bottom of the sediment bowl can prevent damage to the sediment bowl.

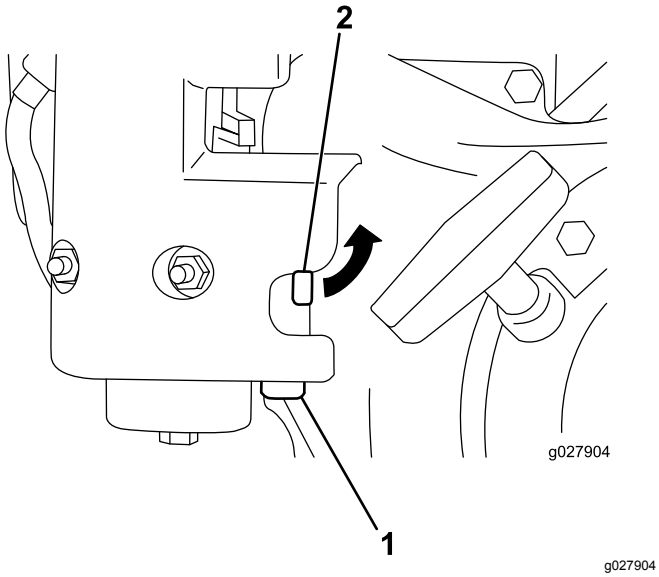

Figure 35

1. Sediment owl
2. Fuel-shutoff valve

2. Clean the bowl and filter in clean gasoline and install it.

Electrical System Maintenance

Servicing the Traction-Interlock Switch

Use the following procedure if the traction-interlock switch needs adjustment or replacement.

1. Ensure that the engine is off and the traction lever is disengaged and resting against the neutral stop (Figure 36).

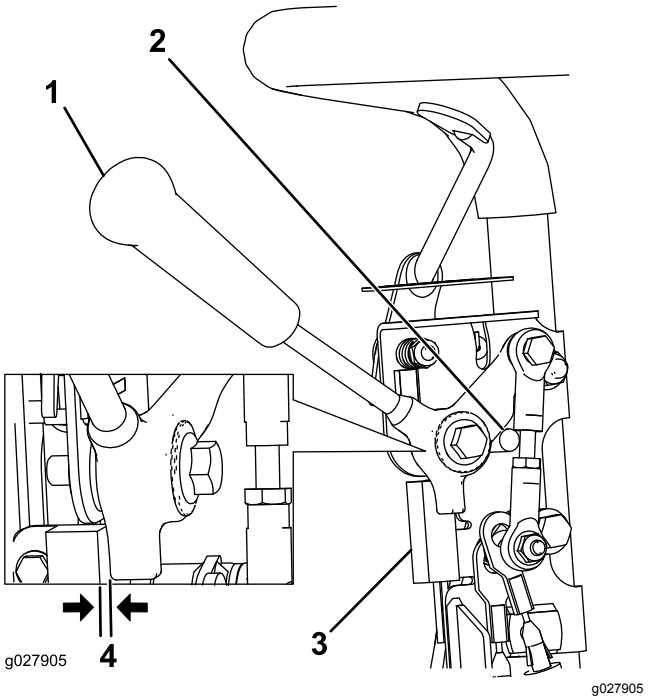

Figure 36

1. Traction lever
2. Neutral stop
3. Interlock switch
4. 0.8 mm (0.032 inch) gap

2. Loosen the interlock switch mounting fasteners (Figure 36).
3. Place a 0.8 mm (0.032 inch) thick shim between the traction lever and the interlock switch (Figure 36).
4. Tighten the interlock switch mounting fasteners and check the gap again.

   Note: The traction lever must not contact the switch.

5. Engage the traction lever and verify that the switch loses continuity.

   Note: Replace the switch if necessary.

Brake Maintenance

Adjusting the Service/Parking Brake

If the service/parking brake slips during operation, adjust it.

1. Engage the service brake, push in the parking brake knob, and allow the service brake to rest on the parking-brake pin (Figure 37).

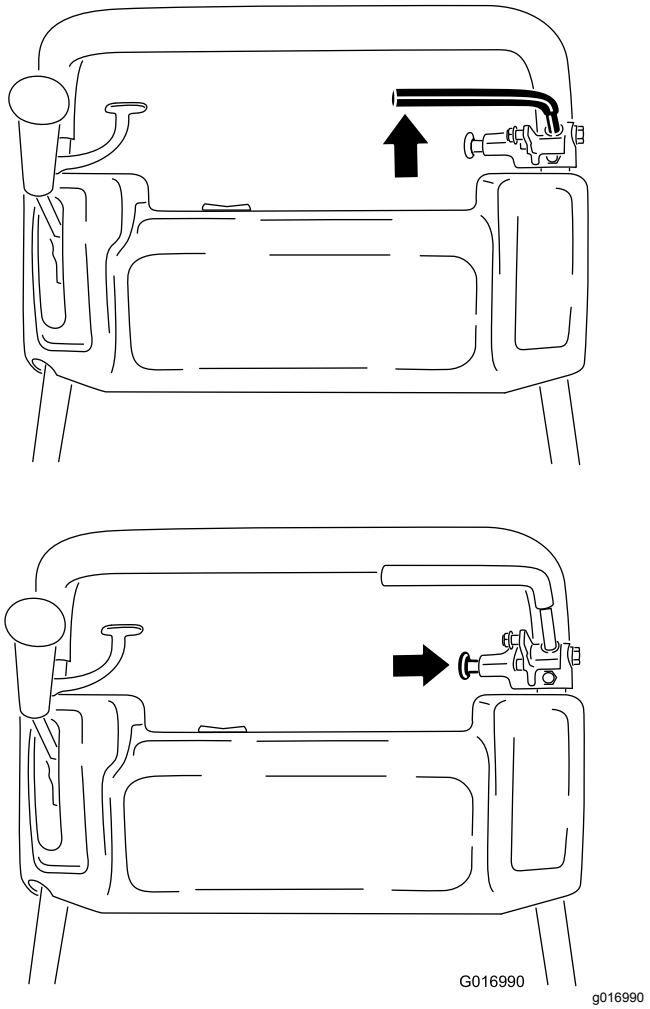

Figure 37

2. Using a spring scale, press rearward on the service-brake lever (Figure 38). The parking brake should release when a force of 13.5 to 18 kg (30 to 40 lb) is attained. If the parking brake releases before 13.5 to 18 kg (30 to 40 lb) of force is attained, adjust the brake cable.

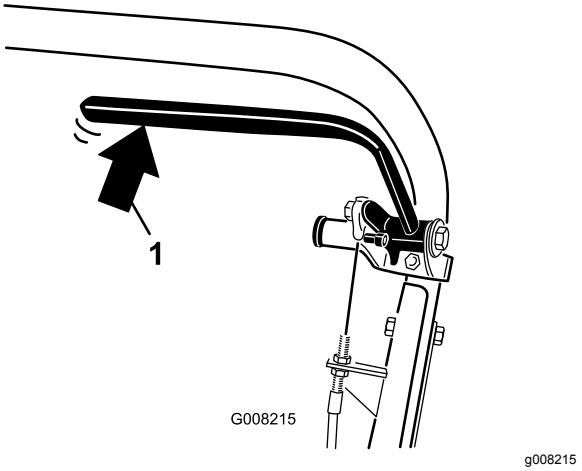

Figure 38

1. Rear pressure on the service-brake lever

3. Loosen the retainer that secures the V-belt cover and pivot the cover open (Figure 39).

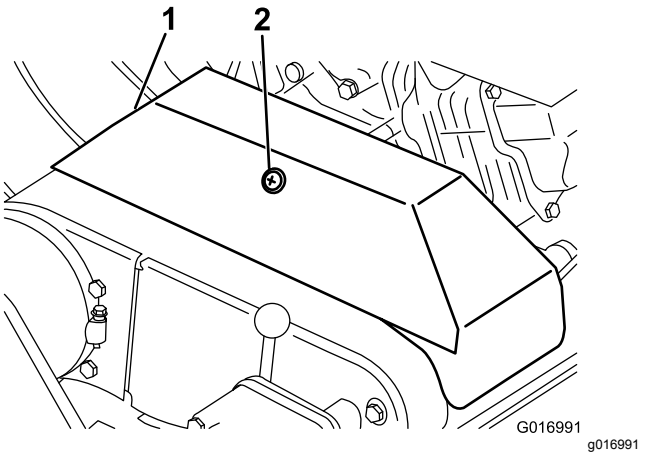

Figure 39

1. V–belt cover
2. Retainer

4. To adjust the brake cable tension, proceed as follows.
   - To decrease the cable tension, loosen the front cable jam nut and tighten the rear jam nut (Figure 40). Repeat steps 1 and 2 and adjust the tension if necessary.
   - To increase the cable tension, tighten the front cable jam nut and loosen the rear jam nut (Figure 40). Repeat steps 1 and 2 and adjust the tension if necessary.

   Note: You can adjust the cable at the jam nut brackets by the control panel or at the bracket at the base of the engine.

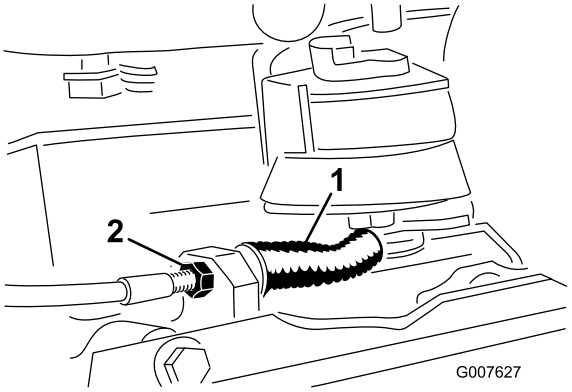

g007627

Figure 40

1. Service/parking brake cable
2. Front jam nut

5. Close the cover and secure the retainer.

Belt Maintenance

Adjusting the Belts

Ensure that the belts are properly tensioned to ensure proper operation of the machine and prevent unnecessary wear. Check the belts frequently.

Adjusting the Reel-Drive Belt

1. Remove the belt-cover mounting fasteners and the belt cover to expose the belt (Figure 41).

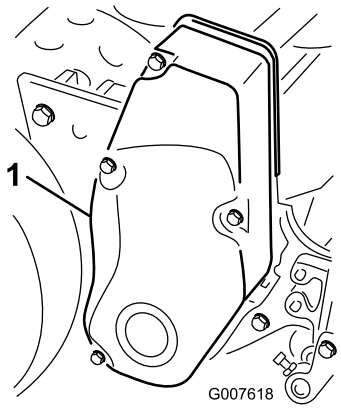

g007618

Figure 41

1. Belt cover

2. Check the tension by pressing the belt at mid-span of the pulleys (Figure 42) with 18 to 22 N (4 to 5 lb) of force. The belt should deflect 6 mm (1/4 inch).

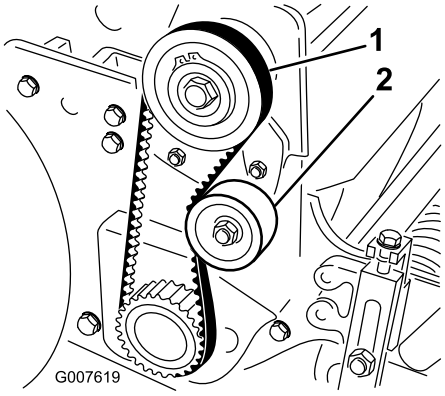

g007619

Figure 42

1. Reel-drive belt
2. Idler pulley

3. Complete the following steps to adjust the belt tension:

   A. Loosen the idler-pulley mounting nut and pivot the idler pulley clockwise against the backside of the belt until you attain the desired belt tension (Figure 42).

Important: **Do not over-tension the belt.**

B. Tighten the nut to lock the adjustment.

4. Install the belt cover by placing it in position.
5. While maintaining a slight gap between the cover seal and the side plate, install each mounting bolt until the threads engage in the insert.

   Note: The gap allows visual alignment of the bolts to the threaded inserts.
6. After all bolts are installed, tighten them until the stand-offs inside the cover contact the side plate.

   Note: Do not overtighten the bolts.

Adjusting the Traction-Drive Belt

1. Remove the belt-cover mounting fasteners and the belt cover to expose the belt (Figure 43).

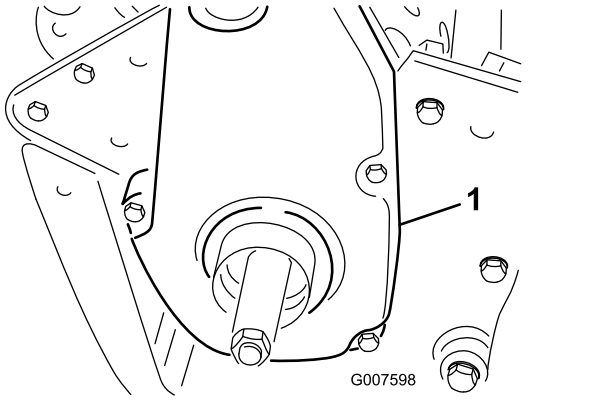

Figure 43

1. Traction-drive-belt cover

2. Check the tension by pressing the belt at mid span of the pulleys (Figure 44) with 18 to 22 N (4 to 5 lb) of force.

   Note: The belt should deflect 6 mm (1/4 inch).

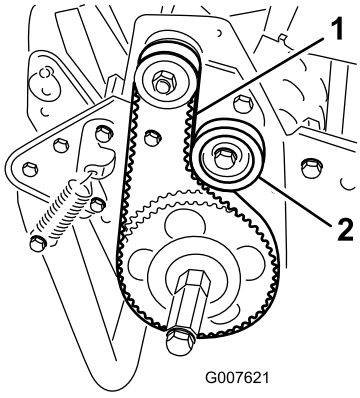

Figure 44

1. Traction-drive belt
2. Idler pulley

3. Complete the following to adjust the belt tension:

   A. Loosen the idler-pulley mounting nut and pivot the idler pulley clockwise against the backside of the belt until the desired belt tension is attained (Figure 44).

   Important: **Do not over-tension the belt.**

   B. Tighten the nut to lock the adjustment.
4. Install the belt cover by placing it in position.
5. While maintaining a slight gap between the cover seal and the side plate, install each mounting bolt until the threads engage in the insert.

   Note: The gap allows visual alignment of the bolts to the threaded inserts.
6. After all bolts are installed, tighten them until the stand-offs inside the cover contact the side plate.

   Note: Do not overtighten the bolts.

Adjusting the Differential Belt

1. Remove the bolts securing the front and rear sections of the differential cover to the differential housing and slide the cover sections away to expose the belt.
2. Check the tension by pressing the belt at mid span of the pulleys (Figure 45) with 22 to 26 N (5 to 6 lb) of force.

   Note: The belt should deflect 6 mm (1/4 inch).

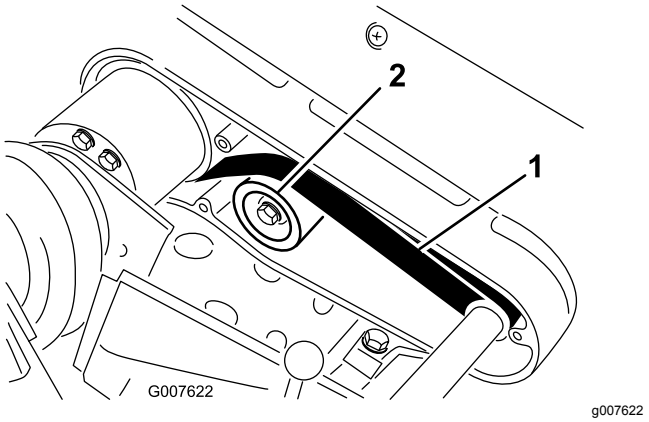

Figure 45

1. Differential belt
2. Idler pulley

3. Complete the following to adjust the belt tension:

   A. Loosen the idler pulley mounting nut and pivot the idler pulley clockwise against the backside of the belt until the desired belt tension is attained (Figure 45).

   Important: **Do not over-tension the belt.**

   B. Tighten the nut to lock the adjustment.
4. Install the belt cover by placing it in position.

5. While maintaining a slight gap between the cover seal and the side plate, install each mounting bolt until the threads engage in the insert. The gap allows visual alignment of the bolts to the threaded inserts.
6. After all bolts are installed, tighten them until the stand-offs inside the cover contact the side plate. Do not overtighten the bolts.

Adjusting the Primary V-Belts

1. To adjust the belt tension on primary V-belts, first check the adjustment of the traction control; refer to Adjusting the Traction Control (page 36). If you are unable to attain the 27 to 32 N (6 to 7 lb) force required in adjusting the traction control, proceed to the next step.
2. Loosen the retainer that secures the V-belt cover and pivot the cover open (Figure 46).

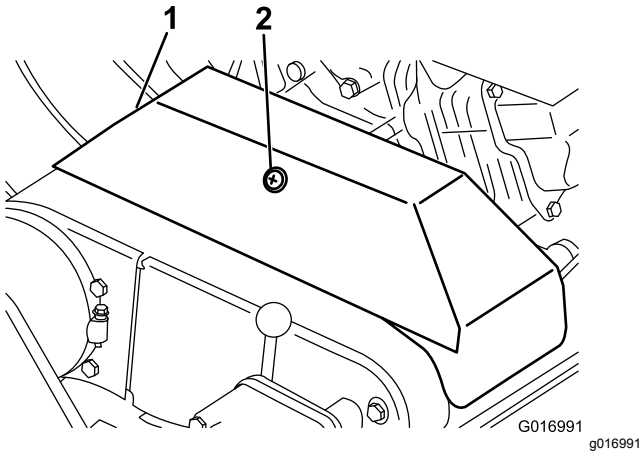

Figure 46

1. V-belt cover
2. Retainer

3. To increase the belt tension, loosen the engine mounting bolts and move the engine backwards in the slots.

   Important: **Do not over-tension the belt.**
4. Tighten the mounting bolts.

   Note: The distance between the center of the drive pulley and the center of the driven pulley should be approximately 12.9 cm (5.1 inches) after the new V-belts are installed.
5. After tensioning the primary V-belts, check the alignment of the engine output-shaft pulley and the counter-shaft pulley with a straightedge.
6. If the pulleys are misaligned, loosen the screws that secure the engine mounting base to the machine frame and slide the engine from side to side until the pulleys are aligned within 0.7 mm (0.030 inch).

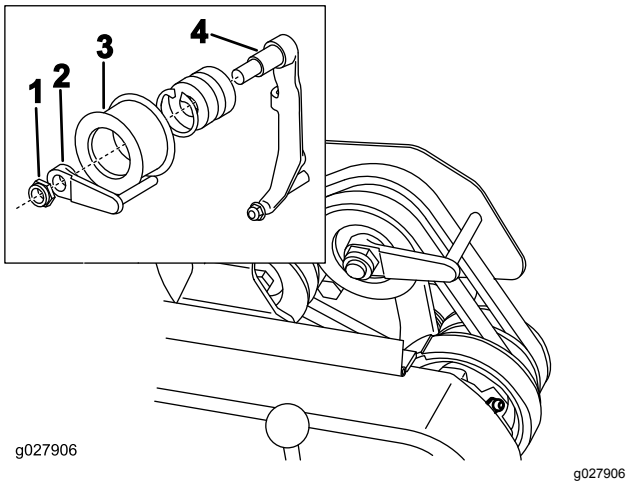

Figure 47

1. Locknut
2. Belt guide
3. Idler pulley
4. Idler arm

7. Tighten the mounting screws and check the alignment.
8. To push or pull the machine easier without starting the engine, adjust the belt guide (Figure 47, inset) as follows:
   A. Engage the clutch.
   B. Loosen the locknut that secures the idler pulley and the belt guide to the idler arm.
   C. Rotate the belt guide clockwise until a gap of approximately 1.5 mm (0.06 inch) is obtained between the guide finger and the backside of the drive belts.
   D. Tighten the locknut that secures the idler pulley and the belt guide to the idler arm.
9. Close the cover and secure the retainer.

Replacing the Differential Belt

1. Remove the bolts that secure the traction drive and reel-drive belt covers to the right side plate and remove the belt covers.
2. Loosen the idler pulley mounting nut on each idler pulley and pivot each idler pulley counterclockwise away from the backside of each belt to release the belt tension.
3. Remove the belts.
4. Remove the bolts that secure the front and rear sections of the differential cover to the differential housing and slide the cover sections away to expose the belt (Figure 48).

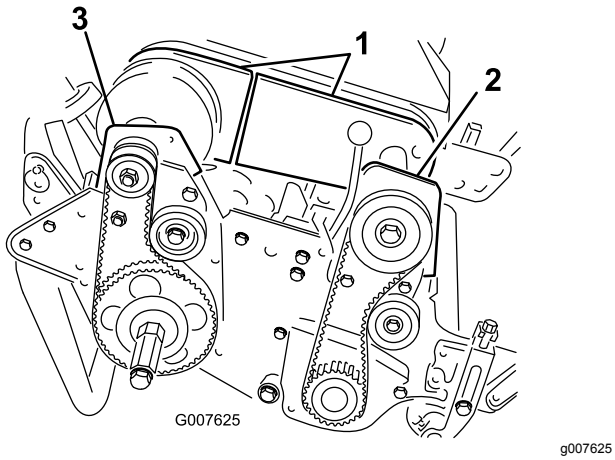

Figure 48

1. Differential cover sections
2. Front clutch housing
3. Right rear bearing housing

5. Loosen the idler pulley mounting nut on the differential idler pulley and pivot the idler pulley counterclockwise away from the backside of the belt to release the belt tension.
6. Remove the 2 bolts and 2 locknuts that secure the front clutch housing to the side plate (Figure 48).
7. Rotate the housing 180° so that the bottom of the housing points upward.
8. Remove the 2 bolts and 2 locknuts that secure the right rear bearing housing to the side plate (Figure 48).
9. Rotate the housing 180° so that the bottom of the housing points upward.
10. Remove the old belt.
11. Slide the new belt over the rotated housing covers, the differential cover sections, and onto the differential pulleys.
12. Ensure that the idler pulley is positioned against the backside of the belt.
13. Rotate both housings back into the upright position and secure them to the side plate with the bolts and nuts that you previously removed.
14. Adjust the differential belt tension; refer to Adjusting the Differential Belt (page 34).
15. Adjust the belt tension on the traction drive and reel-drive belts; refer to Adjusting the Traction-Drive Belt (page 34), and Adjusting the Reel-Drive Belt (page 33).
16. Install the differential, traction drive, and reel-drive covers.

Controls System Maintenance

Adjusting the Traction Control

If the traction control does not engage or it slips during operation, an adjustment is necessary.

1. Move the traction control to the DISENGAGED position.
2. Loosen the retainer that secures the V-belt cover and pivot the cover open (Figure 46).
3. To increase the cable tension, loosen the front-cable jam nut and tighten the back-cable jam nut (Figure 49) until a force of 8 to 9 N·m (6 to 7 lb) is created to engage the traction control.

   Note: Measure the force at the control knob.

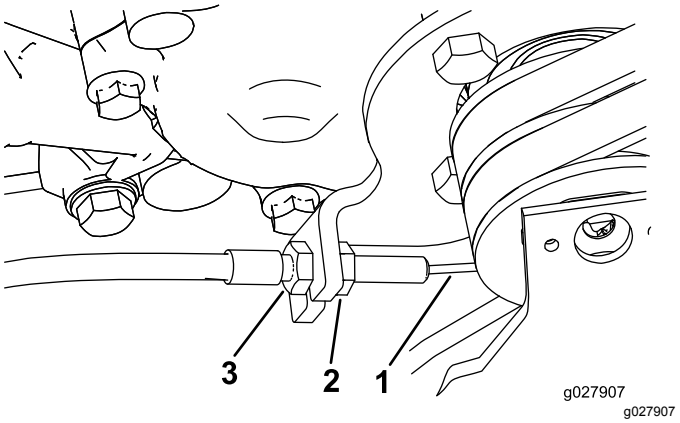

Figure 49

1. Traction cable
2. Front-cable jam nut
3. Back-cable jam nut

4. Tighten the front-cable jam nut.
5. Close the cover and secure the retainer.
6. Check the traction-control operation.

Cutting Unit Maintenance

Blade Safety

Use care when checking the cutting-unit reel. Wear gloves and use caution when servicing the reel.

Leveling the Rear Drum to the Reel

1. Park the machine on a flat, level surface, preferably a precision steel work plate.
2. Place a 0.6 x 2.5 cm (1/4 x 1 inch) flat steel strip, approximately 73.6 cm (29 inches) long, under the reel blades and against the front edge of the bedknife to prevent the bedbar from resting on the work surface.
3. Raise the front roller so that only the rear drum and the reel are on the surface.
4. Firmly press down on the machine above the reel so that all reel blades contact the steel strip.
5. While pressing down on the reel, slide a feeler gauge under one end of the drum, then check the other end of the drum.

   Note: If there is a gap between the drum and the work surface, greater than 0.25 mm (0.010 inch), on either end, adjust the drum (proceed to step 6). If the gap is less than 0.25 mm (0.010 inch), no adjustment is required.
6. Remove the rear belt cover from the right side of the machine (Figure 50).

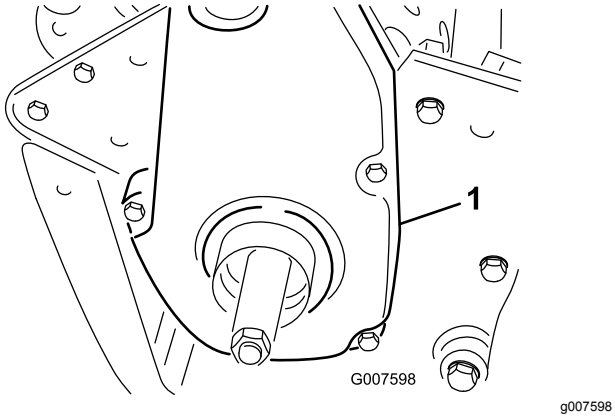

g007598

Figure 50

1. Traction-drive belt cover

7. Rotate the driven pulley until the holes align with the 4 roller bearing flange screws (Figure 51).

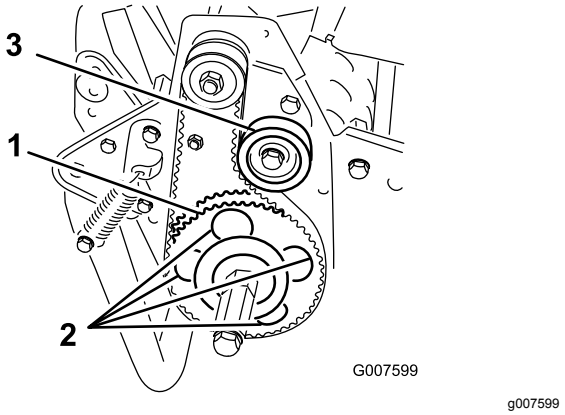

g007599

Figure 51

1. Driven pulley
2. 4 holes
3. Idler pulley

8. Loosen the 4 roller bearing screws and the screw that secures the idler pulley.
9. Raise or lower the right side of the roller assembly until the gap is less than 0.25 mm (0.010 inch).
10. Tighten the roller bearing screws.
11. Adjust the belt tension and tighten the idler pulley mounting screw (Figure 51).

Adjusting the Bedknife to the Reel

Adjust the bedknife to the reel after grinding, backlapping, or disassembling the cutting unit. This procedure is not intended as a daily adjustment.

1. Park the machine on a flat, level work surface.
2. Tilt the machine back on the handle to expose the bedknife and the reel.

   Important: **Do not tip the machine at an angle greater than 25°. Tipping the machine beyond 25 ° leads to oil leaking into the combustion chamber and/or fuel leaking out of the fuel-tank cap.**
3. Rotate the reel so that a blade crosses the bedknife edge between the first and second bedknife screw heads on the right side of the cutting unit (Figure 52).

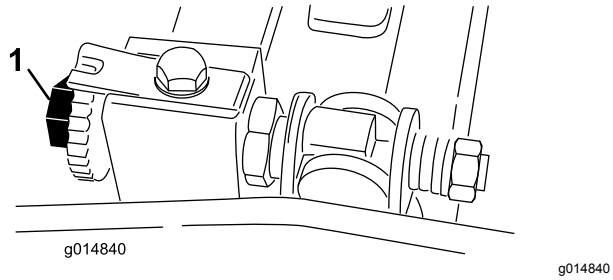

Figure 52

1. Bedbar-adjusting screw

4. Rotate the reel so that a blade crosses the bedknife edge between the first and second bedknife screw heads on the right side of the cutting unit.
5. Insert the 0.05 mm (0.002 inch) shim between the marked blade and the bedknife edge at the point where the marked blade crosses the bedknife edge.
6. Turn the right bedbar-adjusting screw until you feel light pressure (i.e., drag) on the shim by sliding it side-to-side (Figure 52).
7. Remove the shim.
8. For the left side of the cutting unit, slowly rotate the reel so that the closest blade crosses the bedknife edge between the first and second screw heads.
9. Repeat steps 4 through 7 for the left side of the cutting unit and left bedbar-adjusting screw.
10. Repeat steps 5 through 7 until light drag is achieved on both the right and left sides of the cutting unit utilizing the same contact points.
11. To obtain light contact between the reel and bedknife, turn each bedbar-adjusting screw clockwise 3 clicks.

    Note: Each click turned on the bedbar-adjusting screw moves the bedknife 0.018 mm (0.0007 inch). Clockwise rotation moves the bedknife edge closer to the reel and counterclockwise rotation move the bedknife edge away from the reel.
12. Test the cutting performance by inserting a long strip of cutting performance paper between the reel and bedknife, perpendicular to the bedknife (Figure 53). Slowly rotate the reel forward; it should cut the paper.

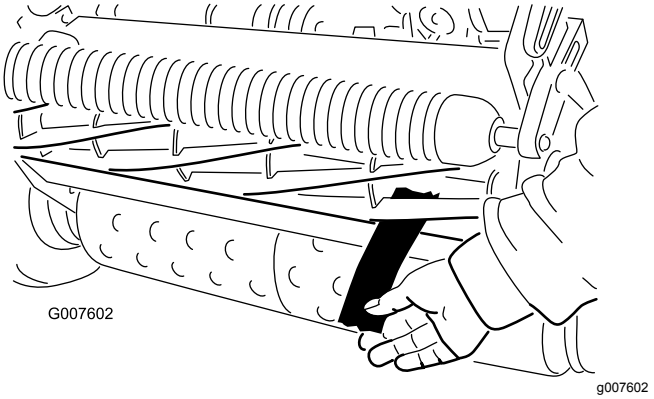

Figure 53

Note: If you see excessive contact/reel drag, it will be necessary to backlap, face the front of the bedknife, or grind the cutting unit to achieve the sharp edges that are necessary for precise cutting.

Adjusting the Height-of-Cut

1. Verify that the rear roller is level and that the bedknife-to-reel contact is correct. Tip the machine back on the handle to expose the front and rear rollers and the bedknife.

   Important: **Do not tip the machine at an angle greater than 25°. Tipping the machine beyond 25 ° leads to oil leaking into the combustion chamber and/or fuel leaking out of the fuel-tank cap.**
2. Loosen the locknuts that secure the height-of-cut arms to the height-of-cut brackets (Figure 54).

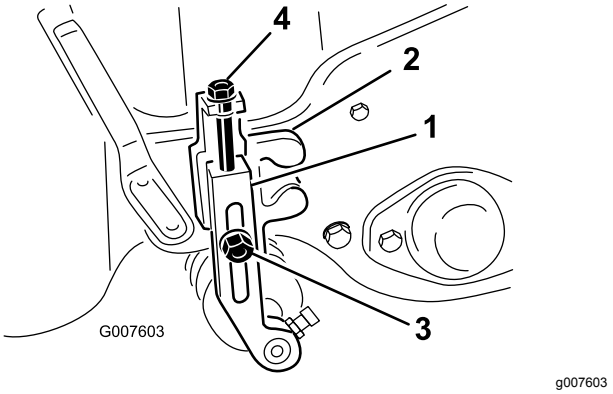

Figure 54

1. Height-of-cut arm
2. Height-of-cut bracket
3. Locknut
4. Adjusting screw

3. Loosen the nut on the gauge bar (Figure 55) and set the adjusting screw to the desired height-of-cut. The distance between the bottom of the screw head and the face of the bar is the height of cut.

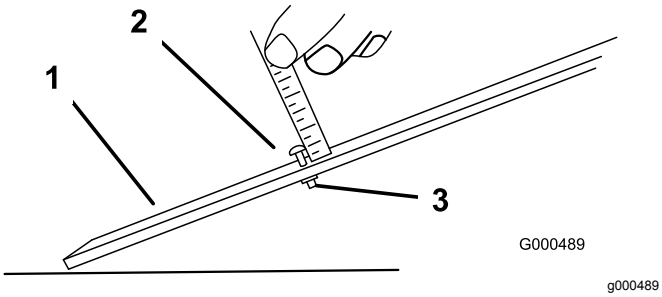

Figure 55

1. Gauge bar
2. Height-adjusting screw
3. Nut

4. Hook the screw head on the cutting edge of the bedknife and rest the rear end of the bar on the rear roller (Figure 56).

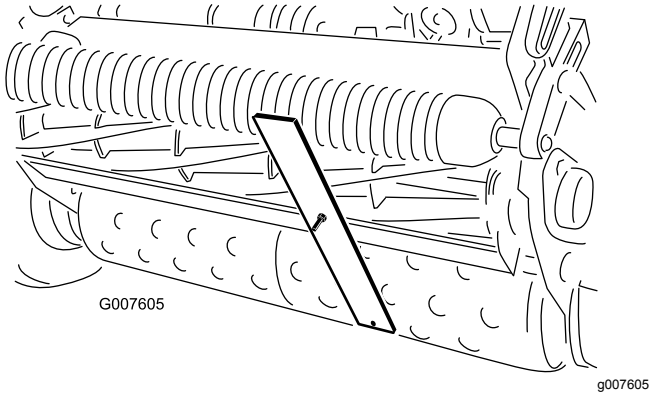

Figure 56

5. Rotate the adjusting screw until the roller contacts the front of the gauge bar.
6. Adjust both ends of the roller until the entire roller is parallel to the bedknife.

   Important: **When set properly, the rear and front rollers contact the gauge bar and the screw is snug against the bedknife. This ensures that the height-of-cut is identical at both ends of the bedknife.**
7. Tighten the nuts to lock the adjustment.

   Important: **To avoid scalping on undulating turf, ensure that the roller supports are positioned rearward (the roller closer to the reel).**

   Note: The front roller can be put in 3 different positions (Figure 57), depending on the application and needs of the user.
   - Use the front position when a groomer is installed.
   - Use the middle position without a groomer.
   - Use the third position in extremely undulating turf conditions.

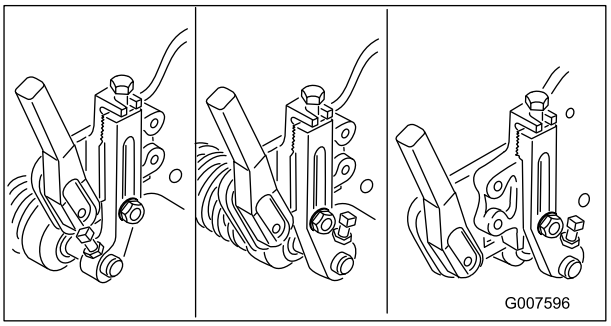

Figure 57

Adjusting the Grass Shield Height

Adjust the shield to ensure proper grass clipping discharge into the basket.

1. Measure the distance from the top of the front support rod to the front lip of the shield at each end of the cutting unit (Figure 58).

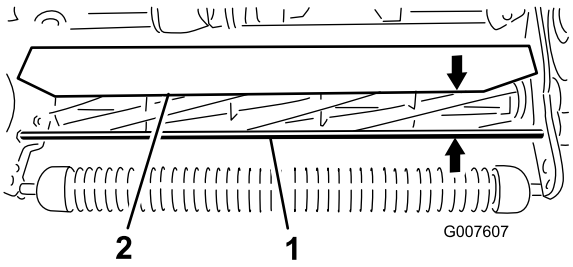

Figure 58

1. Support rod
2. Shield

2. The height of the shield from the support rod for normal cutting conditions should be 10 cm (4 inches). Loosen the bolts and nuts that secure each end of the shield to the side plate and adjust the shield to the correct height.
3. Tighten the fasteners.

   Note: You can lower the shield for dry turf conditions (clippings fly over the top of the basket) or raise it to allow for heavy, wet grass conditions (clippings build up on the rear of the basket).

Adjusting the Cut-Off Bar

Adjust the cut-off bar to ensure that the clippings are cleanly discharged from the reel area.

1. Loosen the screws that secure the top bar (Figure 59) to the cutting unit.

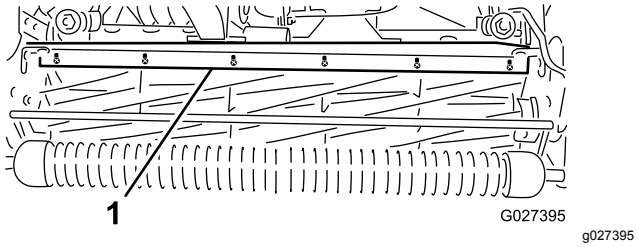

Figure 59

1. Cut-off bar

2. Insert a 1.5 mm (0.060 inch) feeler gauge between the top of the reel and the bar and tighten the screws.
3. Ensure that the bar and reel are equal distances apart across the entire reel.

   Note: The bar is adjustable to compensate for changes in turf conditions. Adjust the bar closer to the reel when the turf is extremely wet. By contrast, adjust the bar further away from the reel when turf conditions are dry. The bar should be parallel to the reel to ensure optimum performance. Adjust the bar when you adjust the shield height or when you sharpen the reel on a reel grinder.

Identifying the Bedbar

To determine if the bedbar is standard or aggressive, check the left bedbar mounting ears. If the mounting ears are rounded, it is a standard bedbar. If the mounting ears have a notch in them, it is an aggressive bedbar (Figure 60).

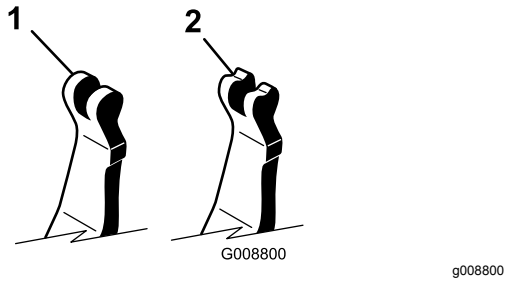

Figure 60

1. Standard bedbar
2. Aggressive bedbar

Servicing the Bedbar

Removing the Bedbar

1. Turn the bedbar-adjuster screw counterclockwise to back the bedknife away from the reel (Figure 61).

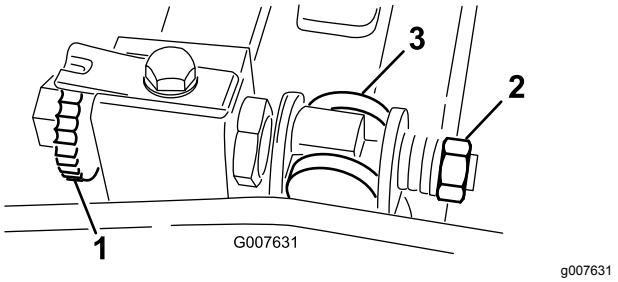

Figure 61

1. Bedbar-adjusting screw
2. Spring-tension nut
3. Bedbar

2. Back out the spring-tension nut until the washer is no longer tensioned against the bedbar (Figure 61).
3. On each side of the machine, loosen the jam nut that secures the bedbar bolt (Figure 62).

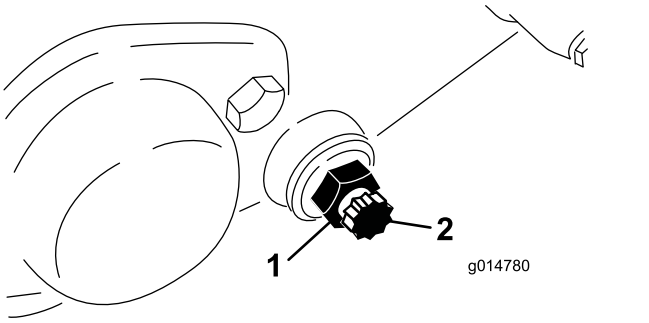

Figure 62

1. Jam nut
2. Bedbar bolt

4. Remove each bedbar bolt allowing the bedbar to be pulled downward and removed from the machine. Save the 2 nylon and 2 stamped steel washers on each end of the bedbar (Figure 62).

Installing the Bedbar

1. Install the bedbar, positioning the mounting ears between the washer and the bedbar adjuster.
2. Secure the bedbar to each side plate with the bedbar bolts (jam nuts on the bolts) and 8 washers.

   Note: Position a nylon washer on each side of the side plate boss. Place a steel washer outside each of the nylon washers.
3. Torque the bolts to 27 to 36 N·m (20 to 27 ft-lb).

4. Tighten the jam nuts until the outside thrust washers just rotate freely.
5. Tighten the spring-tension nut until the spring is collapsed, then back it off 1/2 turn.
6. Adjust the bedbar; refer to Adjusting the Bedknife to the Reel (page 37).

Bedknife Specifications

Bedknife Installation

1. Use a scraper to remove all rust, scale, and corrosion from the bedbar surface.
2. Lightly oil the bedbar surface before installing the bedknife.
3. Ensure that all the bedbar screw threads are clean.
4. Install, but do not tighten new screws (5/16–18UNC–2A) to secure the bedknife to the bedbar. Apply anti-seize compound to the threads of the screws.

   Important: **Do not apply anti-seize compound to the taper of the screw heads.**
5. Using a torque wrench and the bedknife screw tool (TOR510880), tighten the 2 outer screws to 1 N·m (10 in-lb).
6. Following the order in Figure 63, tighten the screws to 25.4 N·m (225 in-lb).

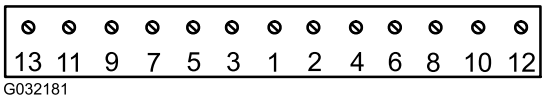

g032181

Figure 63

7. Grind the bedknife after installation.

Preparing the Reel for Grinding

1. Ensure that all cutting unit components are in good condition and correct any issues before grinding.
2. Follow the reel grinder manufacturer's instructions to grind the cutting reel to the following specifications.

Reel Grinding Specifications	
New Reel Diameter	128.5 mm (5.06 inches)
Reel Diameter Service Limit	114.3 mm (4-1/2 inches)
Blade Relief Angle	30° ± 5°
Blade Land Width	1.0 mm (0.04 inches)
Blade Land Width Range	.8 to 1.2 mm (0.03 to 0.05 inches)
Reel Diameter Taper Service Limit	0.25 mm (1/100 inch)

Relief-Grinding the Reel

The new reel has a land width of 1.3 to 1.5 mm (0.050 to 0.060 inch) and a 30° relief grind.

When the land width gets larger than 3 mm (0.120 inch) wide, do the following:

1. Apply a 30° relief grind on all reel blades until the land width is 1.3 mm (0.050 inch) wide (Figure 64.

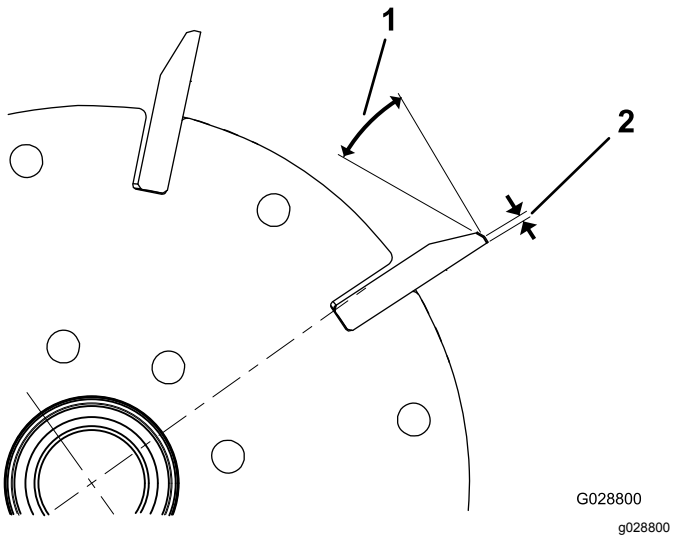

Figure 64

1. 30°
2. 1.3 mm (0.050 inch)

2. Spin grind the reel to achieve <0.025 mm (0.001 inch) reel run-out.

   Note: This causes the land width to grow slightly.

3. Adjust the cutting unit; refer to your cutting unit *Operator's Manual*.

Note: To extend the longevity of the sharpness of the edge of the reel and the bedknife—after grinding the reel and/or the bedknife—check the reel to bedknife contact again after cutting 2 faiways, as any burrs will be removed, which may create improper reel to bedknife clearance and thus accelerate wear.

Bedknife Grinding Specifications

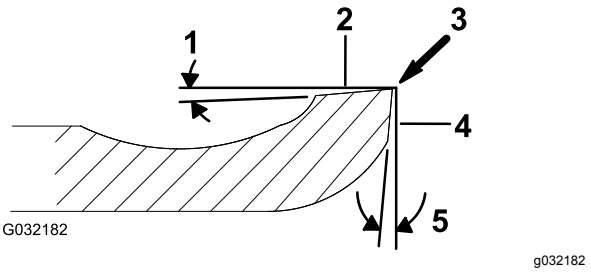

Figure 65

1. Relief angle
2. Top face
3. Remove burr
4. Front face
5. Front angle

Standard bedknife relief angle	3° minimum
Extended bedknife relief angle	7° minimum
Front Angle Range	13° to 17°

Checking the Top Grind Angle

The angle that you use to grind your bedknives is very important.

Use the angle indicator (Toro Part No. 131-6828) and the angle-indicator mount (Toro Part No. 131-6829) to check the angle that your grinder produces and then correct for any grinder inaccuracy.

1. Place the angle indicator on the bottom side of the bedknife as shown in Figure 66.

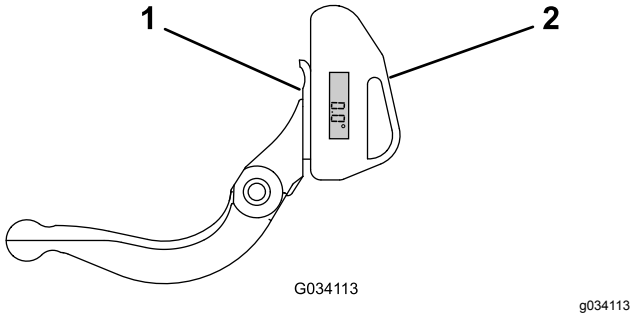

Figure 66

1. Bedknife (vertical)
2. Angle indicator

2. Press the Alt Zero button on the angle indicator.
3. Place the angle-indicator mount on the edge of the bedknife so that the edge of the magnet mates with the edge of the bedknife (Figure 67).

   Note: The digital display should be visible from the same side during this step as it was in step 1.

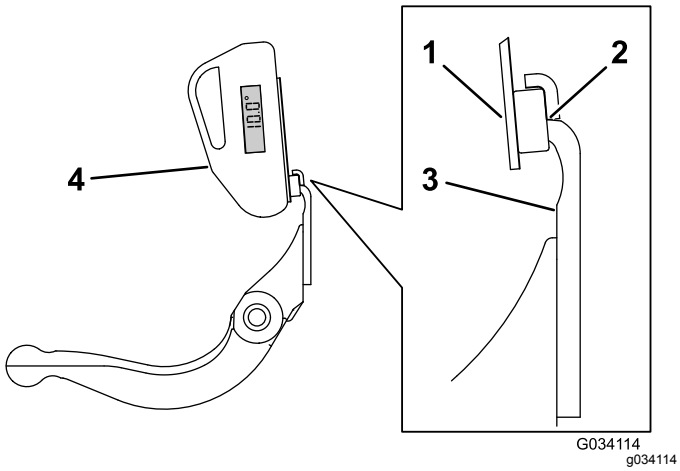

Figure 67

1. Angle-indicator mount
2. Edge of the magnet mated with the edge of the bedknife
3. Bedknife
4. Angle indicator

4. Place the angle indicator on the mount as shown in Figure 67.

   Note: This is the angle that your grinder produces, and should be within 2 degrees of the recommended top grind angle.

Backlapping the Reel

1. Remove the plug in the right reel-drive cover (Figure 68).

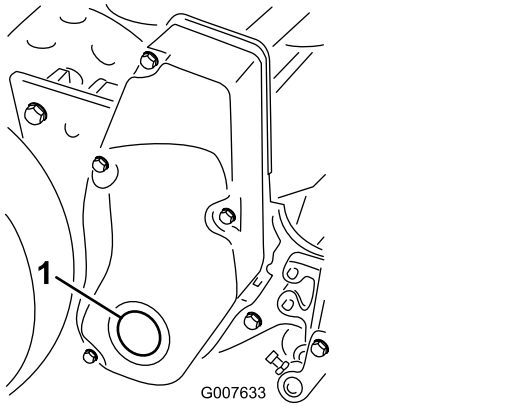

Figure 68

1. Cover plug

2. Insert a 1/2 inch-drive extension bar, connected to the backlapping machine, into the square hole in the center of the reel pulley.
3. Backlap according to the procedure in the Toro *Sharpening Reel and Rotary Mowers Manual*, Form 80-300 PT.

⚠ DANGER

Contact with the reel or other moving parts can result in personal injury.

- **Stay away from the reel while backlapping.**
- **Do not use a short-handled paint brush for backlapping. Part No. 29-9100 Handle assembly, complete or as individual parts, are available from your local authorized Toro distributor.**

Note: For a better cutting edge, run a file across the front face of the bedknife when the lapping operation is completed. This removes any burrs or rough edges that may have built up on the cutting edge.

4. Install the plug in the cover when you complete this procedure.

Storage

Storage Safety

- Park the machine on a level surface, engage the parking brake, shut off the engine, remove the key, and wait for all movement to stop before storing the machine.
- Never store the machine where there is an open flame, spark, or pilot light, such as on a water heater or on other appliances.
- Allow the machine to cool before you store the machine in any enclosure.

Storing the Machine

1. Remove any grass clippings, dirt, and grime from the external parts of the entire machine, especially the engine. Clean the dirt and chaff from the outside of the engine cylinder-head fins and the blower housing.

   Important: **You can wash the machine with mild detergent and water. Do not pressure-wash the machine. Avoid excessive use of water, especially near the shift-lever plate and the engine.**

2. For long-term storage (more than 30 days) add stabilizer/conditioner additive to the fuel in the tank.

   A. Run the engine to distribute conditioned fuel through the fuel system for 5 minutes.

   B. Either shut off the engine, allow it to cool, and drain the fuel tank, or operate the engine until it shuts off.

   C. Start the engine and run it until it shuts off. Start the engine again, with the choke closed, until the engine does not start.

   D. Disconnect the spark-plug wire from the spark plug.

   E. Dispose of the fuel properly. Recycle it according to local codes.

      Important: **Do not store fuel containing stabilizer/conditioner longer than the duration recommended by the fuel-stabilizer manufacturer.**

3. Check and tighten all bolts, nuts, and screws. Repair or replace any part that is worn or damaged.
4. Paint all scratched or bare metal surfaces. Paint is available from your authorized Toro distributor.
5. Store the machine in a clean, dry garage or storage area. Cover the machine to protect it and keep it clean.

Notes:

Notes:

European Privacy Notice

The Information Toro Collects
Toro Warranty Company (Toro) respects your privacy. In order to process your warranty claim and contact you in the event of a product recall, we ask you to share certain personal information with us, either directly or through your local Toro company or dealer.

The Toro warranty system is hosted on servers located within the United States where privacy law may not provide the same protection as applies in your country.

BY SHARING YOUR PERSONAL INFORMATION WITH US, YOU ARE CONSENTING TO THE PROCESSING OF YOUR PERSONAL INFORMATION AS DESCRIBED IN THIS PRIVACY NOTICE.

The Way Toro Uses Information
Toro may use your personal information to process warranty claims, to contact you in the event of a product recall and for any other purpose which we tell you about. Toro may share your information with Toro's affiliates, dealers or other business partners in connection with any of these activities. We will not sell your personal information to any other company. We reserve the right to disclose personal information in order to comply with applicable laws and with requests by the appropriate authorities, to operate our systems properly or for our own protection or that of other users.

Retention of your Personal Information
We will keep your personal information as long as we need it for the purposes for which it was originally collected or for other legitimate purposes (such as regulatory compliance), or as required by applicable law.

Toro's Commitment to Security of Your Personal Information
We take reasonable precautions in order to protect the security of your personal information. We also take steps to maintain the accuracy and current status of personal information.

Access and Correction of your Personal Information
If you would like to review or correct your personal information, please contact us by email at legal@toro.com.

Australian Consumer Law

Australian customers will find details relating to the Australian Consumer Law either inside the box or at your local Toro Dealer.

The Toro Warranty

A Two-Year Limited Warranty

Conditions and Products Covered

The Toro Company and its affiliate, Toro Warranty Company, pursuant to an agreement between them, jointly warrant your Toro Commercial product ("Product") to be free from defects in materials or workmanship for two years or 1500 operational hours*, whichever occurs first. This warranty is applicable to all products with the exception of Aerators (refer to separate warranty statements for these products). Where a warrantable condition exists, we will repair the Product at no cost to you including diagnostics, labor, parts, and transportation. This warranty begins on the date the Product is delivered to the original retail purchaser.
* Product equipped with an hour meter.

Instructions for Obtaining Warranty Service

You are responsible for notifying the Commercial Products Distributor or Authorized Commercial Products Dealer from whom you purchased the Product as soon as you believe a warrantable condition exists. If you need help locating a Commercial Products Distributor or Authorized Dealer, or if you have questions regarding your warranty rights or responsibilities, you may contact us at:

Toro Commercial Products Service Department
Toro Warranty Company
8111 Lyndale Avenue South
Bloomington, MN 55420-1196

952–888–8801 or 800–952–2740
E-mail: commercial.warranty@toro.com

Owner Responsibilities

As the Product owner, you are responsible for required maintenance and adjustments stated in your *Operator's Manual*. Failure to perform required maintenance and adjustments can be grounds for disallowing a warranty claim.

Items and Conditions Not Covered

Not all product failures or malfunctions that occur during the warranty period are defects in materials or workmanship. This warranty does not cover the following:

- Product failures which result from the use of non-Toro replacement parts, or from installation and use of add-on, or modified non-Toro branded accessories and products. A separate warranty may be provided by the manufacturer of these items.
- Product failures which result from failure to perform recommended maintenance and/or adjustments. Failure to properly maintain your Toro product per the Recommended Maintenance listed in the *Operator's Manual* can result in claims for warranty being denied.
- Product failures which result from operating the Product in an abusive, negligent, or reckless manner.
- Parts subject to consumption through use unless found to be defective. Examples of parts which are consumed, or used up, during normal Product operation include, but are not limited to, brake pads and linings, clutch linings, blades, reels, rollers and bearings (sealed or greasable), bed knives, spark plugs, castor wheels and bearings, tires, filters, belts, and certain sprayer components such as diaphragms, nozzles, and check valves, etc.
- Failures caused by outside influence. Conditions considered to be outside influence include, but are not limited to, weather, storage practices, contamination, use of unapproved fuels, coolants, lubricants, additives, fertilizers, water, or chemicals, etc.
- Failure or performance issues due to the use of fuels (e.g. gasoline, diesel, or biodiesel) that do not conform to their respective industry standards.
- Normal noise, vibration, wear and tear, and deterioration.
- Normal "wear and tear" includes, but is not limited to, damage to seats due to wear or abrasion, worn painted surfaces, scratched decals or windows, etc.

Parts

Parts scheduled for replacement as required maintenance are warranted for the period of time up to the scheduled replacement time for that part. Parts replaced under this warranty are covered for the duration of the original product warranty and become the property of Toro. Toro will make the final decision whether to repair any existing part or assembly or replace it. Toro may use remanufactured parts for warranty repairs.

Deep Cycle and Lithium-Ion Battery Warranty:

Deep cycle and Lithium-Ion batteries have a specified total number of kilowatt-hours they can deliver during their lifetime. Operating, recharging, and maintenance techniques can extend or reduce total battery life. As the batteries in this product are consumed, the amount of useful work between charging intervals will slowly decrease until the battery is completely worn out. Replacement of worn out batteries, due to normal consumption, is the responsibility of the product owner. Battery replacement may be required during the normal product warranty period at owner's expense. Note: (Lithium-Ion battery only): A Lithium-Ion battery has a part only prorated warranty beginning year 3 through year 5 based on the time in service and kilowatt hours used. Refer to the *Operator's Manual* for additional information.

Maintenance is at Owner's Expense

Engine tune-up, lubrication, cleaning and polishing, replacement of filters, coolant, and completing recommended maintenance are some of the normal services Toro products require that are at the owner's expense.

General Conditions

Repair by an Authorized Toro Distributor or Dealer is your sole remedy under this warranty.

Neither The Toro Company nor Toro Warranty Company is liable for indirect, incidental or consequential damages in connection with the use of the Toro Products covered by this warranty, including any cost or expense of providing substitute equipment or service during reasonable periods of malfunction or non-use pending completion of repairs under this warranty. Except for the Emissions warranty referenced below, if applicable, there is no other express warranty. All implied warranties of merchantability and fitness for use are limited to the duration of this express warranty.

Some states do not allow exclusions of incidental or consequential damages, or limitations on how long an implied warranty lasts, so the above exclusions and limitations may not apply to you. This warranty gives you specific legal rights, and you may also have other rights which vary from state to state.

Note regarding engine warranty:

The Emissions Control System on your Product may be covered by a separate warranty meeting requirements established by the U.S. Environmental Protection Agency (EPA) and/or the California Air Resources Board (CARB). The hour limitations set forth above do not apply to the Emissions Control System Warranty. Refer to the Engine Emission Control Warranty Statement supplied with your product or contained in the engine manufacturer's documentation for details

Countries Other than the United States or Canada

Customers who have purchased Toro products exported from the United States or Canada should contact their Toro Distributor (Dealer) to obtain guarantee policies for your country, province, or state. If for any reason you are dissatisfied with your Distributor's service or have difficulty obtaining guarantee information, contact the Toro importer.

374-0253 Rev D