FORM NO. 3322–252

TORO®

E24 and E36 Carefree® Cordless

Walk Power Mower

Model No. 20052–9900001 & Up
Model No. 20648–9900001 & Up
Model No. 20650–9900001 & Up

Operator’s Manual

Para obtener una versión gratis de este manual en español, escriba a la dirección indicada más abajo. Asegúrese de indicar el modelo y el número de serie de su producto.

Pour obtenir gratuitement une version en français de ce manuel, écrivez à l’adresse ci–dessous. N’oubliez pas d’indiquer les numéros de modèle et de série de votre produit.

The Toro Company, Attn: Parts Dept., 8111 Lyndale Ave S, Bloomington, MN 55420–1196.

Domestic English (EN)

English

Contents

	Page
Introduction	1
Safety	2
Safe Operating Practices	2
General Operation	2
While Operating	2
Maintenance And Storage	3
Safety and Instruction Decals	4
Assembly	5
Install Handle	5
Install Side Discharge Chute	7
Before Starting	8
Charging Battery	8
Secure Extension Cord	9
Battery Power Status	10
Operation	11
Key	11
Starting/Stopping Instructions	11
Circuit Breaker	12
Mowing Tips	13
Adjusting Height-of-Cut	14
Maintenance	14
Cleaning	15
Blade	15
Battery Disposal	17
Servicing Double-insulated Mower	18
Servicing “On/Off” and Blade Brake System	18
Storage	18
Warranty	Back Cover

Introduction

Thank you for purchasing a Toro product.

All of us at Toro want you to be completely satisfied with your new product, so feel free to contact your local Authorized Service Dealer for help with service, genuine Toro parts, or other information you may require.

Whenever you contact your Authorized Service Dealer or the factory, always know the model and serial numbers of your product. These numbers will help the Service Dealer or Service Representative provide exact information about your specific product. You will find the model and serial number decal located in a unique place on the product (Fig. 1).

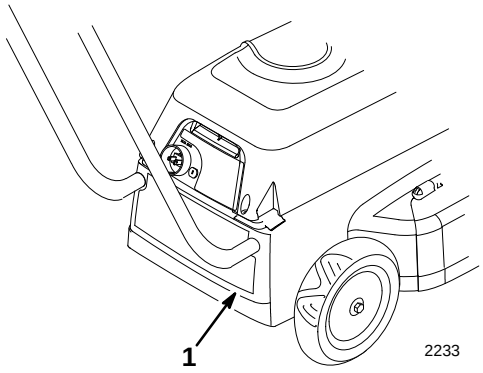

Figure 1

1. Model and serial number engraved in mower housing

For your convenience, write the product model and serial numbers in the space below.

Model No: _____

Serial No. _____

Read this manual carefully to learn how to operate and maintain your product correctly. Reading this manual will help you and others avoid personal injury and damage to the product. Although Toro designs, produces and markets safe, state-of-the-art products, you are responsible for using the product properly and safely. You are also responsible for training persons who you allow to use the product about safe operation.

The Toro warning system in this manual identifies potential hazards and has special safety messages that help you and others avoid personal injury, even death. DANGER, WARNING and CAUTION are signal words used to identify the level of hazard. However, regardless of the hazard, be extremely careful.

DANGER signals an extreme hazard that will cause serious injury or death if the recommended precautions are not followed.

WARNING signals a hazard that may cause serious injury or death if the recommended precautions are not followed.

CAUTION signals a hazard that may cause minor or moderate injury if the recommended precautions are not followed.

Two other words are also used to highlight information. “Important” calls attention to special mechanical information and “Note” emphasizes general information worthy of special attention.

The left and right side of the machine is determined by standing behind the handle in the normal operator’s position.

©The Toro Company – 1999
All Rights Reserved

Printed in USA

Safety

IMPORTANT SAFETY INSTRUCTIONS

This machine meets or exceeds CPSC blade safety requirements for walk-behind rotary mowers and the B71.1 specifications of the American National Standards Institute, in effect at time of production. However, improper use or maintenance by the operator or owner can result in injury. To reduce the potential for injury, comply with these safety instructions and always pay attention to the safety alert ⚠ symbol which means CAUTION, WARNING or DANGER—"personal safety instruction." Failure to comply with the instruction may result in personal injury.

WARNING: To reduce the risk of fire, electric shock, and personal injury when using electric lawn mowers, always follow these basic safety precautions.

READ ALL INSTRUCTIONS BEFORE USING THIS MOWER

SAVE THESE INSTRUCTIONS FOR FUTURE REFERENCE!

Safe Operating Practices

This product is capable of amputating hands and feet and throwing objects. Always follow all safety instructions to avoid serious injury or death.

This mower is designed for cutting and mulching grass or, when equipped with a grass bag, for catching cut grass. Any use for purposes other than these could prove dangerous to user or bystanders.

General Operation

1. Read this manual carefully before operating the mower. Become familiar with the controls and proper use of the mower. Never allow children under 16 years of age to operate the mower. Never allow adults to operate mower without proper instructions.
2. The operator of the mower is responsible for keeping everyone, especially children and pets, away from area of operation. The operator is responsible for accidents or hazards occurring to other people or their property.
3. Thoroughly inspect area where mower will be used and remove sticks, stones, wire, and debris that could be picked up and thrown by mower. Watch for foreign objects while mowing. Objects struck by the lawn mower blade can cause severe injuries to persons.
4. Wear long pants and substantial shoes. Do not operate mower while wearing open-toed shoes, jewelry, loose clothing or when barefoot. Use of rubber gloves and footwear is recommended when working outdoors.
5. Keep all guards, shields, safety devices, side discharge chute or optional grass catcher in place. Repair or replace damaged parts, including decals. Never tamper with safety devices. Check their proper operation regularly.
6. The motor and blade are designed to stop within 3 seconds after releasing the control bail. Ensure that the control bail functions properly before each use of mower. If the blade does not stop within 3 seconds, or if there is a grinding or scraping metal-to-metal noise when the control bail is released, contact your local Authorized Toro Service Dealer for proper "On/Off" and blade brake adjustment or replacement.
7. Before using, always visually inspect to see that the blades, blade fasteners and cutter assembly are not worn or damaged. Replace worn or damaged blades and fasteners in sets to preserve balance.
8. Only use those accessories and attachments designed to be used with this product. Use of any accessory or attachment not designed for this product may increase the risk of injury.

While Operating

1. Do not insert key into plug receptacle until you are ready to mow.
2. Do not operate mower in gaseous, explosive atmospheres. Normal sparking of motor could ignite fumes.
3. Start the motor carefully according to instructions and with feet well away from the blade.
4. Use Right Appliance – Do not use mower for any job except that for which it is intended.
5. Stay Alert – Watch what you are doing. Do not operate mower when tired or under the influence of drugs, alcohol or medication.
6. Be alert and turn mower off if children enter the area.
7. Use extra care when approaching blind corners, shrubs, trees, or other objects that may obscure vision.
8. Do not mow near drop-offs, ditches, or embankments. The operator could lose footing or balance.

9. Avoid dangerous environments. Never operate mower in wet grass. or damp locations. Do not use mower in the rain.

10. Always maintain secure footing. Keep a firm grip on the handle and walk; never run. Mow only in daylight or in good artificial light.

11. Mow across the face of slopes; never up and down. Use extreme caution when changing direction on slopes. Do not mow excessively steep slopes. Wear skid resistant shoes on slopes.

12. Don't Overreach – Keep proper footing and balance at all times.

13. Do not force the mower. It operates best and safest at the rate for which it was designed.

14. Always wear safety glasses or eye shields during operation to protect eyes from foreign objects that may be thrown from the machine. (Regular eyeglasses are **not** safety glasses.)

15. Always wear an approved dust mask when using unit in dusty conditions.

16. Keep face, hands, and feet away from the mower housing and cutter blade when the motor is running. Blade can cause injury to hands and feet. Stay behind the handle until the motor stops.

17. Use extreme caution when reversing or pulling the mower toward you. Before and while moving backwards, look behind and down for small children.

18. Since the blade rotates for a few seconds after the control bar is released, stay behind the handle until all moving parts stop.

19. After striking a foreign object or if mower vibrates abnormally, stop motor and disconnect extension cord. Check mower for damage and make all repairs before using mower again. If major repairs are ever needed or if assistance is desired, contact your local Authorized TORO Service Dealer.

20. Do not operate mower if it has been dropped or damaged in any way. Repair any damage before operating mower.

21. Stop the motor, wait for all moving parts to stop, and disconnect extension cord from mower before adjusting the height-of-cut.

22. Stop the motor when pushing the mower outside the lawn area.

23. Stop the motor and remove the key from the plug before removing side discharge chute or optional grass catcher.

24. Stop motor before leaving the operator's position—behind the handle. Disconnect extension cord from mower if mower will be unattended.

25. If mower must be lifted to be transported, stop motor, stay behind the handle until all moving parts stop and remove key from the plug receptacle.

Maintenance And Storage

1. Perform only those maintenance instructions described in this manual. If major repairs are ever needed or if assistance is desired, contact your local Authorized TORO Service Dealer.

2. Before mower is cleaned, inspected, serviced, or adjusted, stop motor and wait for all moving parts to stop. Remove key from plug.

3. Do not charge lawn mower in rain or in wet locations.

4. To prevent electric shock while charging, repair or replace any damaged electrical cords immediately.

Note: The extension cord is only needed to recharge the battery. It is not used for mowing with the mower.

5. Don't abuse extension cord while charging. Do not yank cord to remove it from plug receptacle. Keep cord away from heat, oil and sharp edges.

6. When replacing batteries, all batteries should be replaced at the same time. Mixing fresh and discharged batteries could increase internal cell pressure and rupture the battery(ies).

7. When inserting the batteries into this product, the proper polarity or direction must be observed. Reverse insertion of batteries can result in burned wires, sparks, leakage or explosion of batteries.

8. Remove key before servicing, cleaning, or removing material from the lawn mower.

9. Use only replacement battery(ies) of approved type and size.

10. Do not dispose of the battery(ies) in a fire; the cell may explode. Check with local codes for special disposal instructions.

11. Do not open or mutilate the battery(ies). Released electrolyte is corrosive and may cause damage to the eyes or skin. It may be toxic if swallowed.

12. Exercise care in handling batteries in order not to short the battery (contact both positive and negative battery posts) with conducting materials such as rings, bracelets, and keys. The battery or conductor may overheat and cause burns.

13. To ensure the mower is in safe operating condition, frequently check and keep all nuts, bolts, and screws tight. Ensure blade bolt is tightened to 35-40 ft–lb (48-54 N·m).

14. Always keep a sharp blade on your mower. When servicing blade, refer to blade maintenance section for correct installation and servicing procedures. Use identical replacement blades only.

15. To reduce fire hazard, keep motor free of excessive grass, leaves, and accumulations of dirt.

16. Check optional grass catcher bag frequently for wear or deterioration. Replace with a new bag when worn or damaged for your protection.

17. When not in use, remove key and store mower indoors in a dry, locked-up place out of the reach of children. Allow motor to cool before storing in an enclosure.

18. At the time of manufacture, the mower conformed to the safety standards in effect for rotary mowers. To assure best performance and continued safety certification of the mower, use genuine TORO replacement parts and accessories. Replacement parts and accessories made by other manufacturers may result in non–conformance with the safety standards, and that could be dangerous.

SAVE THESE INSTRUCTIONS FOR FUTURE REFERENCE!

Safety and Instruction Decals

Safety decals and instructions are easily visible to the operator and are located near any area of potential danger. Replace any decal that is damaged or lost.



ON KEY



ON MULCH PLUG



ON MULCH PLUG

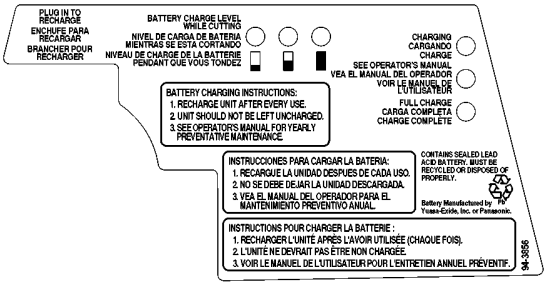

ON CONTROL PANEL



ON REAR OF MOWER

Assembly

IMPORTANT: Do not connect extension cord to mower until mower is fully assembled. Also, always unplug extension cord from mower when adding or switching attachments.

Install Handle

IMPORTANT: Control cable must be over, not under, handles (Fig. 2).

CORRECT ROUTING

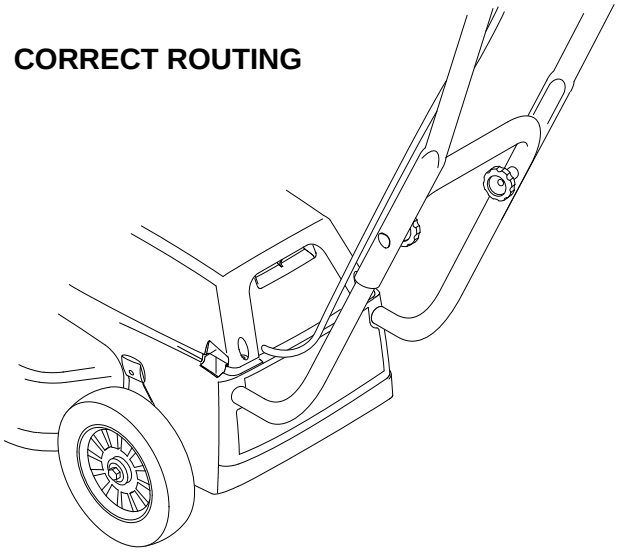

INCORRECT ROUTING

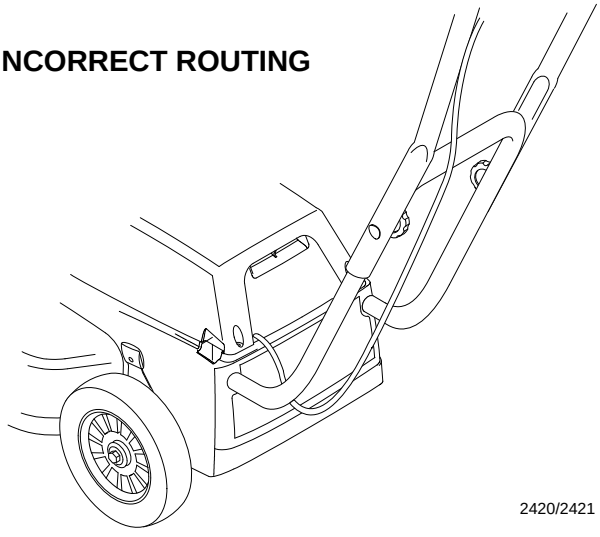

2420/2421

Figure 2

WARNING

POTENTIAL HAZARD

- **Excessive pulling on control cable may cause mower to start. When mower is operating, blade is rotating.**

WHAT CAN HAPPEN

- **Contact with rotating mower blade could cause serious personal injury.**

HOW TO AVOID THE HAZARD

- **Do not lift mower by control cable or pull excessively on cable.**

1. Lift control cable above holes in rear of shroud.

2. Lower Handle – Slide ends of lower handle into holes in shroud.

If handle stops before screw holes are aligned in center of shroud openings, push down on lower handle section while pushing tubes into holes in shroud (Fig. 3). Push tubes in until screw holes are centered in shroud openings.

Secure ends of lower handle with two screws.

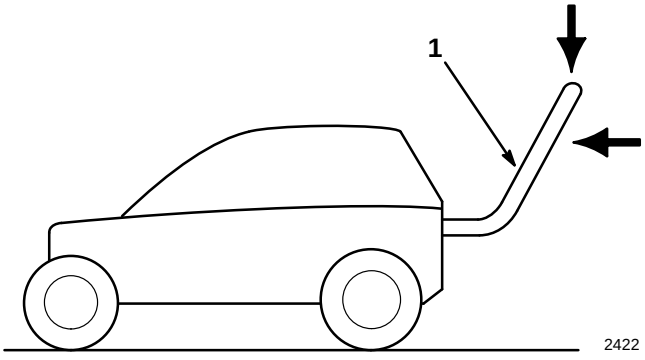

2422

Figure 3

1. Lower handle

3. Upper Handle (Fig. 4) – Handle height is adjustable to three different heights for operator comfort. Stand behind mower to gauge height. Position ends of upper handle on outside of lower handle. Select one set of upper handle holes and align with lower handle holes. Secure handles in place with bolts and knobs.

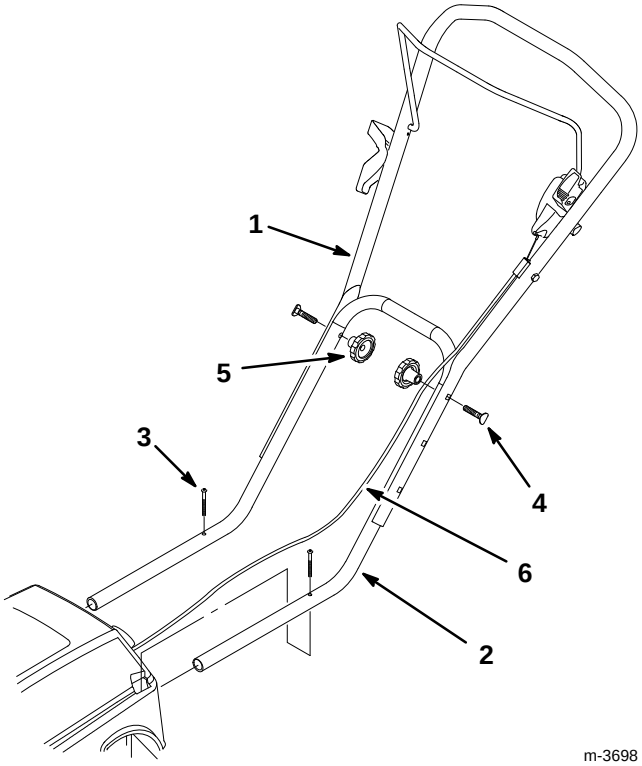

Figure 4

1. Upper handle
2. Lower handle
3. Screw (2)
4. Bolt (2)
5. Knob (2)
6. Control cable

4. If handles are in highest height position, use clip to attach cable to left side of lower handle tube (Fig. 5).

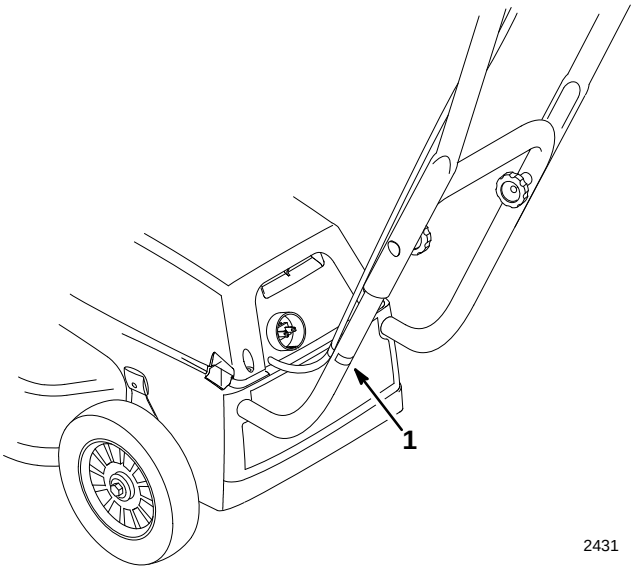

Figure 5

1. Clip

If handles are in lowest height position, use clip to attach cable to right side of lower handle tube (Fig. 6).

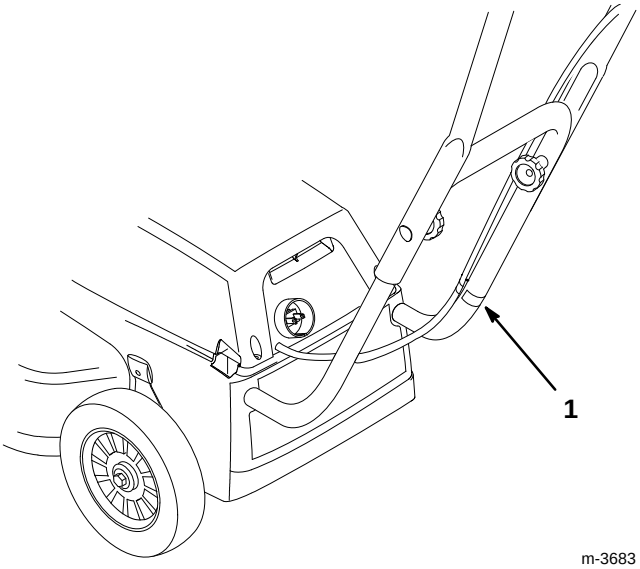

Figure 6

1. Clip

Install Side Discharge Chute

1. Use handle on mulch door to raise door (Fig. 7).

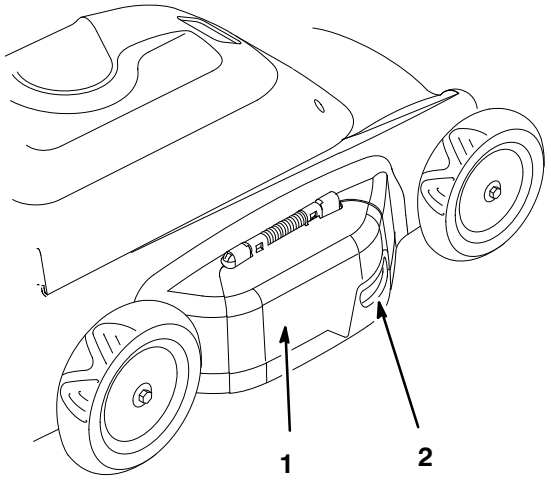

2225

Figure 7

1. Mulch door
2. Handle

2. Hook side discharge chute onto pegs (Fig. 8 & 9).

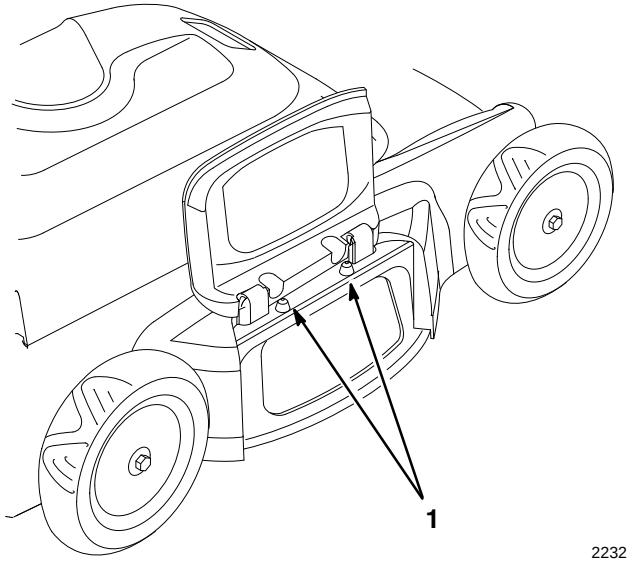

2232

Figure 8

1. Peg (2)

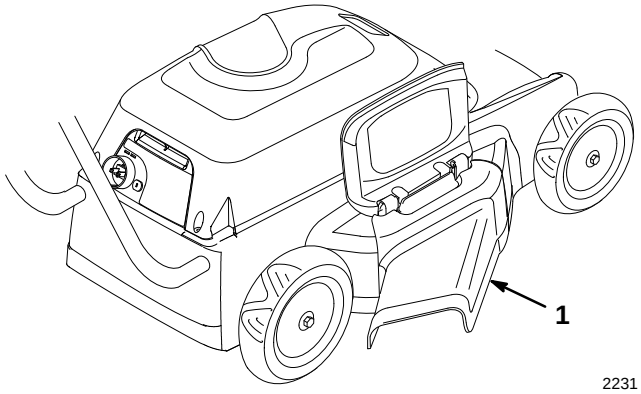

2231

Figure 9

1. Side discharge chute

3. Lower mulch door on top of side discharge chute (Fig. 10).

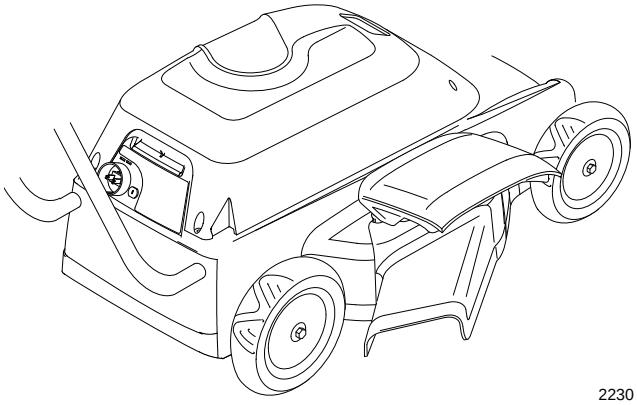

2230

Figure 10

Before Starting

Charging Battery

It takes approximately 12–16 hours to charge a fully discharged battery. **Charge the battery after <u>every use</u>. If the battery is not recharged after every use, the battery life will be shortened. Recharge even if mower is only run for a few minutes. This battery does not have a "memory."**

Note: The battery is charged at the factory. However, before using mower the first time, it is necessary to recharge battery and ensure it has a full charge before operating.

To charge battery:

1. Always charge mower in a dry area protected from the weather. Also, keep mower away from water and any flammable substances.

2. If key is in plug receptacle, remove it (Fig. 11).

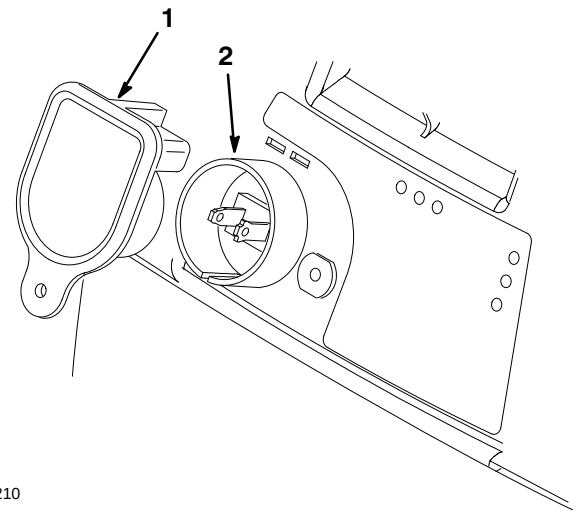

Figure 11

1. Key
2. Plug

3. Insert extension cord into the plug receptacle and connect other end of extension cord to a normal 120 volt household outlet (Fig. 12). Refer to Securing Extension Cord, page 9.

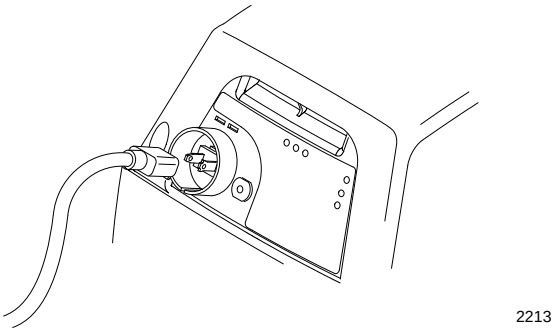

Figure 12

4. The three vertical LED lights on the control panel will indicate the charging status (Fig. 13). Refer to the Charging Chart, page 9, for a summary of the LED lights.

   The red light on the control panel will begin to flash to indicate battery is present and is ready to charge.

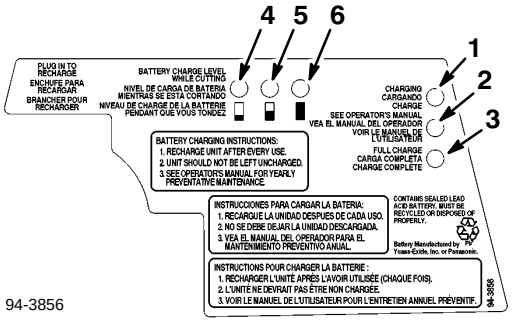

Figure 13

1. Red light
2. Yellow light
3. Green light
4. Empty box
5. Half full box
6. Full box

5. After a few minutes, the red light will stop flashing and become a steady red. This indicates the battery is charging.

6. When the battery is almost fully charged, the red light will go out and the green light will go on. The red and green light will alternately turn on and off. When the green light is on more than the red light, the battery is fully charged.

IMPORTANT: Your mower has been designed to be safe if left continually on charge for extended periods of time. It is recommended that the battery be left continually on charge when it is not in use during the mowing season. <u>During the non-mowing season, the mower can be unplugged and stored if the battery is fully charged.</u>

Note: When the mower is left on charge, it is normal for the red and green lights to alternately turn on and off.

LED CHARGING LIGHTS CHART			
Charging Status	**Red**	**Green**	**Yellow**
Pre-charge qualification – charger testing battery condition/trickle charging battery. Trickle charge can last from minutes to hours.	blinking	off	off
Battery charging	on	off	off
Battery charged	off	on	off
Battery absent or defective	off	off	on
Charging fault – charger malfunctioning	not applicable	not applicable	on
Charge pending – temperature too hot or cold to charge	not applicable	not applicable	blinking

Secure Extension Cord

Use only a UL listed (CSA certified in Canada) extension cord.

WARNING

POTENTIAL HAZARD
- **Contact with water while operating unit could cause electric shock.**

WHAT CAN HAPPEN
- **Electric shock can cause injury or death.**

HOW TO AVOID THE HAZARD
- **Don't handle plug or mower with wet hands or while standing in water.**
- **Use only a UL listed (CSA certified in Canada) extension cord.**

To reduce the risk of electric shock, this mower has a polarized plug (one blade is wider than the other) (Fig. 14) and will require the use of a polarized extension cord. The polarized extension cord receptacle will fit onto the mower plug only one way. If the extension cord receptacle does not fit fully onto the mower plug, reverse the cord receptacle. If the cord receptacle still does not fit, obtain a correct polarized extension cord. A polarized extension cord will require the use of a polarized wall outlet. The extension cord plug will fit into the polarized wall outlet only one way. If the cord plug does not fit fully into the wall outlet, reverse the cord plug. If the cord plug still does not fit, contact a qualified electrician to install the proper wall outlet. Do not change the mower plug, extension cord receptacle, or extension cord plug in any way.

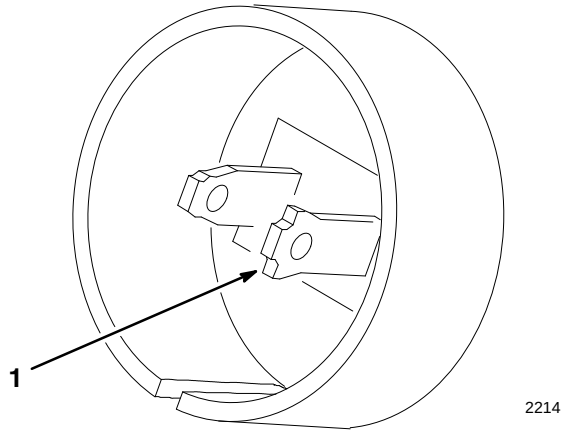

Figure 14

1. Wide blade

7. Insert extension cord receptacle onto mower plug (Fig. 15).

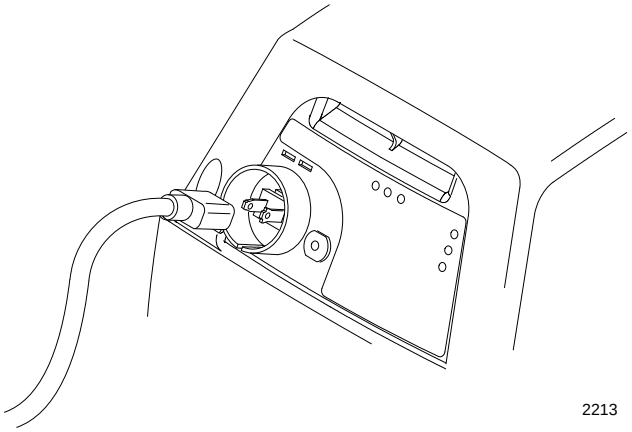

Figure 15

Note: Do not unplug extension cord by pulling on cord. To unplug, grasp the cord ends, not the cord.

WARNING

POTENTIAL HAZARD
- **The electrical cord could be damaged.**

WHAT CAN HAPPEN
- **A damaged electrical cord could cause a shock or fire.**

HOW TO AVOID THE HAZARD
- **Thoroughly inspect electrical cord before charging unit. If cord is damaged, do not charge unit. Replace or repair damaged cord immediately. Contact your TORO service dealer for assistance.**

Battery Power Status

The three horizontal LED lights at the top of the control panel indicate approximately how much charge is left in the battery while the mower is in operation (Fig. 13). The lights are only accurate when the mower is operating and cutting grass. The following is an explanation of the symbols under the battery power status LED lights:

Full Box – Battery is between 50%–100% charged.

Half Full Box – Battery is between 5%–50% charged.

Empty Box – Battery has less than 5% charge left and should be recharged.

IMPORTANT: The battery's life will be shortened if mower is run after battery lights have turned off. Do not continue to mow. Recharge battery.

Operation

This mower is intended for residential use only.

WARNING

POTENTIAL HAZARD

- **When key is in plug receptacle, mower is operational. Someone could accidentally start the mower.**

WHAT CAN HAPPEN

- **Accidental starting of mower could seriously injure you or other bystanders.**

HOW TO AVOID THE HAZARD

- **Always remove key from plug receptacle when leaving mower unattended, even for a short period of time.**

Key

The mower will only operate when key is fully seated in plug receptacle (Fig. 16). To prevent accidental starting or unauthorized use of mower, always remove key from plug receptacle when leaving mower unattended. The key has a tab with a hole in it to allow key to be hung from a nail, out of the reach of children. Read warning label on key.

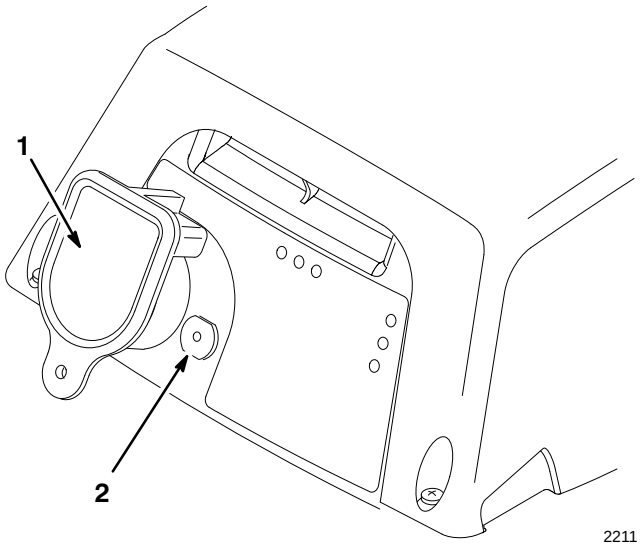

Figure 16

1. Key
2. Circuit breaker button

Starting/Stopping Instructions

To Start Motor

1. Push mower onto a flat concrete or asphalt surface.

Note: Starting mower in thick grass could cause mower to clog.

2. Insert key fully into plug receptacle (Fig. 16).

3. Pull control bar toward handle while pushing down slide on control (Fig. 17).

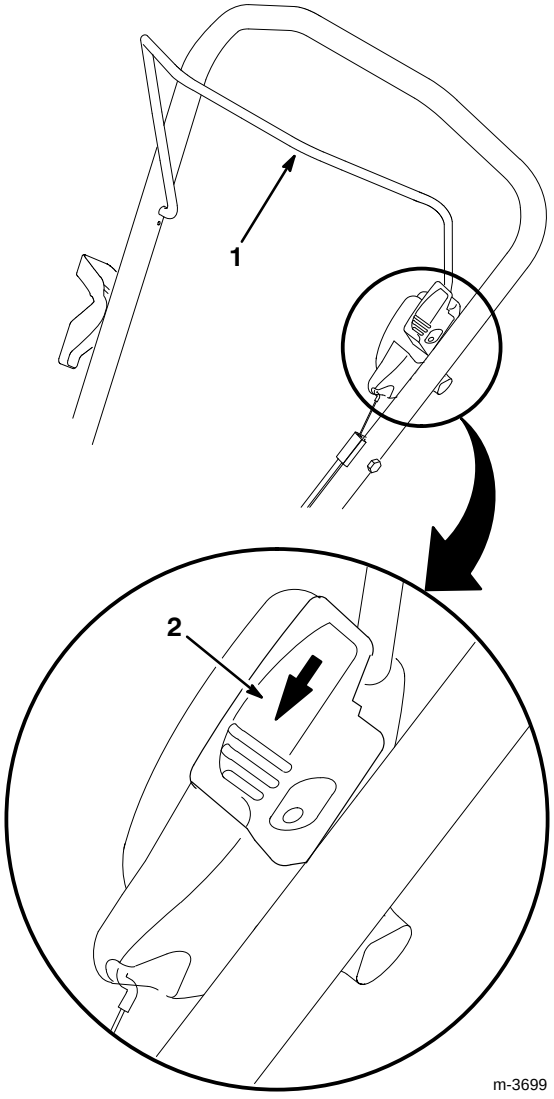

Figure 17

1. Control bar
2. Slide pushed down

4. Squeeze control bar to handle (Fig. 18).

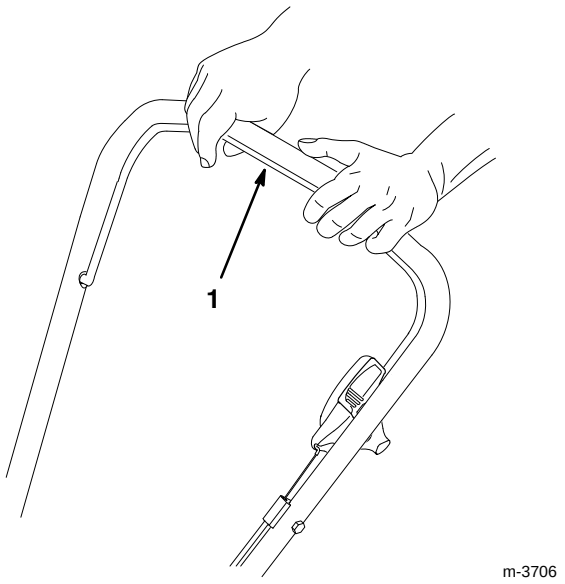

Figure 18

1. Control bar

Note: Keep mower running when turning mower. Turning mower off when making a turn does not save battery energy.

To Stop Motor

1. Release control bar.

2. Remove key from plug receptacle if mower will be unattended for any period of time. Hang key in a high place out of reach of children.

3. **Always charge battery <u>immediately after each use of mower</u>. If battery is not charged after each use, battery life will be shortened.** See Charging Battery in Before Starting section.

IMPORTANT: Your mower has been designed to be safe if left continually on charge for extended periods of time. It is recommended that the battery be left continually on charge when it is not in use during the mowing season. <u>During the non-mowing season, the mower can be unplugged and stored if the battery is fully charged.</u>

Circuit Breaker

If mower is run under too much load, the circuit breaker will trip. Follow these instructions to reset circuit breaker.

IMPORTANT: Never reset circuit breaker when key is in receptacle and control bar is squeezed to handle.

1. Remove key from plug receptacle (Fig. 19).

2. Wait 30 seconds to 1 minute before pushing in circuit breaker button (Fig. 19).

3. Reinstall key in plug receptacle.

4. Resume cutting under less load.

If circuit breaker repeatedly trips, raise the height-of-cut or side discharge.

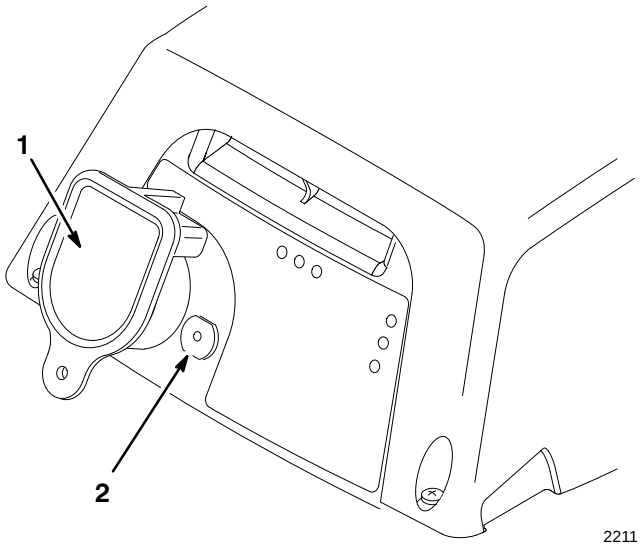

Figure 19

1. Key
2. Circuit breaker button

Mowing Tips

Battery Run Time

With a battery powered lawn mower, the condition of the grass and the way that you mow the grass will affect the how long the battery will run on a single charge at each mowing.

The following are some things that will affect battery run time:

- Moisture content of grass – The more moisture there is in the grass, the faster the battery will run down.
- Walking/mowing speed – The faster you walk, the faster the battery will run down.
- Mode of operation – Mulching grass requires the most battery energy. Bagging requires the second highest amount of battery energy and side discharging uses the least.
- Height-of-cut setting – If you are experiencing problems with the battery running down too fast, try raising the height-of-cut setting one notch.

General Mulching Tips

Your mower is designed to mulch grass when the mulch door is completely closed (Fig. 20). Follow these instructions whether cutting grass or leaves for the best cutting results and lawn appearance:

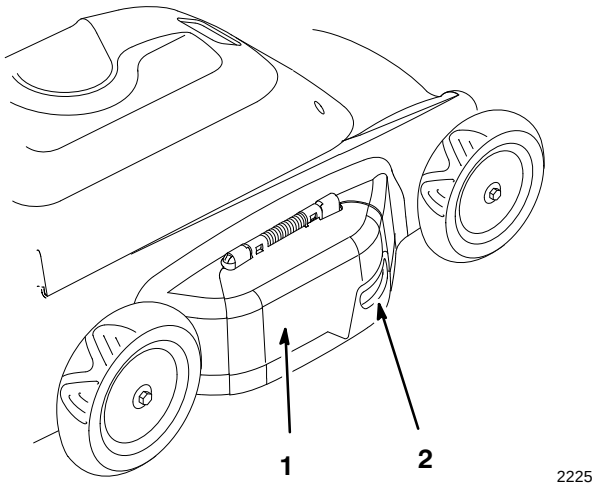

Figure 20

1. Mulch door
2. Handle

- Maintain a **sharp blade** throughout the cutting season. Periodically file down nicks on blade.
- **Only mow dry grass or leaves.** Wet grass and leaves tend to clump on yard and may cause mower to plug or motor to stall. They may also be slippery to walk on and could cause you to slip and fall.

WARNING

POTENTIAL HAZARD
- **Wet grass or leaves can cause you to slip and contact blade.**

WHAT CAN HAPPEN
- **Blade contact can seriously injure you.**

HOW TO AVOID THE HAZARD
- **Mow only in dry conditions.**

- Clean clippings or leaves from underside of mower deck after each mowing.
- Grass grows at different rates at different times of the year. In the heat of summer, it is generally best to cut grass at the $2^1/_2$", 3" or $3^1/_2$" height-of-cut settings. Only about $^1/_3$ of the grass blade should be cut off. Cutting below the $2^1/_2$"setting is not recommended unless grass is sparse or it is late fall when grass growth begins to slow down.
- When changing height-of-cut from the established setting (ex. $2^1/_2$", 3" or $3^1/_2$") to a lower height, the grass may appear ragged or uneven until the grass adjusts to the new established height-of-cut and regains its normal appearance.
- When cutting grass over six inches tall, you may want to first mow using the side discharge chute or try the highest height-of-cut setting and a slower walking speed; then mow again at a lower setting for best lawn appearance. If grass is too long and leaves clumps on top of lawn, mower may plug and cause motor to stall.
- Alternate mowing direction. This helps disperse clippings over lawn for even fertilization.

If the finished cut lawn appearance is unsatisfactory, try one or more of the following:

- Sharpen the blade.
- Walk at a slower pace while mowing.
- Raise the height-of-cut setting on your mower.
- Cut grass more frequently.
- Overlap cutting swaths instead of cutting a full swath with each pass.
- Set height-of-cut on front wheels one notch lower than rear wheels. (example: set front wheels at 2 inch setting and rear wheels at 2.5 inch setting)

Cutting Leaves

- When cutting is complete, always be sure that 50% of the lawn shows through the cut leaf cover. This may require one or more passes over the leaves.
- For light leaf coverage, position all wheels at the same height-of-cut setting.
- Walk at a slower mowing speed if leaves are not being cut up finely enough to be hidden down in the grass.
- If you cut up a lot of oak leaves, you might want to add lime to your grass in the spring. Lime reduces the acidity of oak leaves.

Adjusting Height-of-Cut

The mower has five height-of-cut adjustments: $1^1/_2$", 2", $2^1/_2$", 3" and $3^1/_2$". The rear adjustment lever adjusts the height-of-cut for both rear wheels, and the front adjustment lever adjusts both front wheels.

DANGER

POTENTIAL HAZARD
- **Adjusting height-of-cut levers could bring hands into contact with moving blade.**

WHAT CAN HAPPEN
- **Contact with blade could cause serious personal injury.**

HOW TO AVOID THE HAZARD
- **Stop motor, disconnect extension cord from mower and wait for all moving parts to stop before changing the height-of-cut.**
- **Do not put fingers under housing to lift mower when adjusting height-of-cut levers.**

1. Stop motor and wait for all moving parts to stop. Disconnect extension cord from mower.
2. For easier adjustment, lift housing up so wheels are off ground. **Do not place hands under deck to lift housing.** Squeeze adjustment lever toward wheel and move lever to desired setting (Fig. 21). Ensure pin on adjustment lever engages notch in mower housing. Adjust all wheels to the same setting.

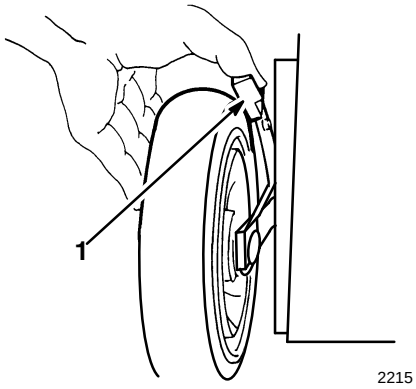

Figure 21

1. Height-of-cut adjustment lever

Note: For easier adjustment of rear wheels, grasp lower handle with one hand and lift up mower slightly so wheel is off ground. Then squeeze adjustment handle toward wheel.

Maintenance

WARNING

POTENTIAL HAZARD
- **When extension cord is connected to mower and plugged into a normal household outlet, the mower is operational. Someone could accidentally start the mower.**

WHAT CAN HAPPEN
- **Accidental starting of mower could seriously injure you or other bystanders.**

HOW TO AVOID THE HAZARD
- **Always remove extension cord from mower receptacle when leaving mower unattended, even for a short period of time.**

Cleaning

Before cleaning mower, stop motor, wait for all moving parts to stop, and disconnect extension cord from mower.

IMPORTANT: Do not clean mower with a garden hose. Moisture can be trapped in mower and may cause corrosion of internal parts.

After Every Use

- Clean the underside of the mower housing. Be particularly careful to keep the front cavity clear of all debris (Fig. 22). Remove dirt and grass clippings with a hardwood scraper. Avoid burrs and sharp edges.

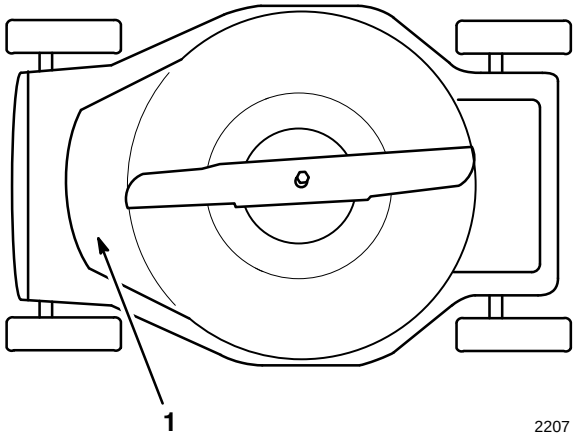

Figure 22

1. Front cavity

- Brush all debris off top of mower housing.

Once A Year

- Remove top shroud (Fig. 23) and clean out any debris underneath it with compressed air, a vacuum cleaner or a brush.

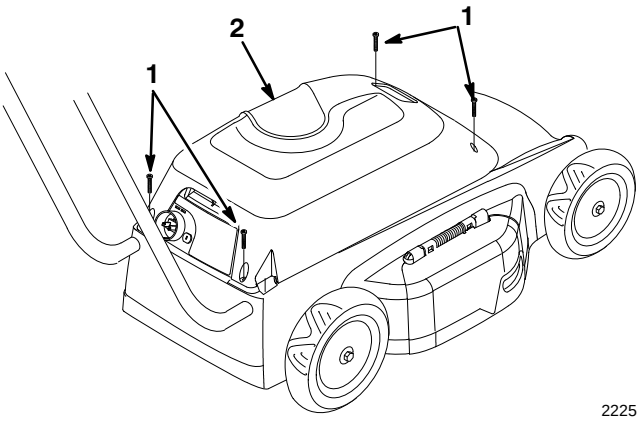

Figure 23

1. Screw (4)
2. Shroud

IMPORTANT: Do not use metal objects to clean around battery. If metal objects contact the positive and negative posts at the same time, this could short the battery. The battery or conductor may overheat and cause burns.

- Check for any discolored or charred wires or switch contacts. If any are damaged, see your Authorized Toro Service Dealer for repairs.

Blade

Always mow with a sharp blade. A sharp blade cuts cleanly and without tearing or shredding the grass blades like a dull blade.

WARNING

POTENTIAL HAZARD
- **Motor could be started by someone accidentally.**

WHAT CAN HAPPEN
- **Accidental starting of motor could cause serious injury to operator or bystanders.**

HOW TO AVOID THE HAZARD
- **Do not attempt to inspect, remove or replace blade without first disconnecting extension cord from the mower.**

1. Stop motor and wait for all moving parts to stop. Disconnect extension cord from mower.
2. Tip mower on its side (Fig. 24).
3. EXAMINING BLADE – Carefully examine blade for sharpness and wear, especially where flat and curved parts meet (Fig. 24A). Since sand and abrasive material can wear away the metal that connects the flat and curved parts of the blade, check blade before using the mower. If a slot or wear is noticed (Fig. 24B & 24C), replace blade. Refer to step 4.

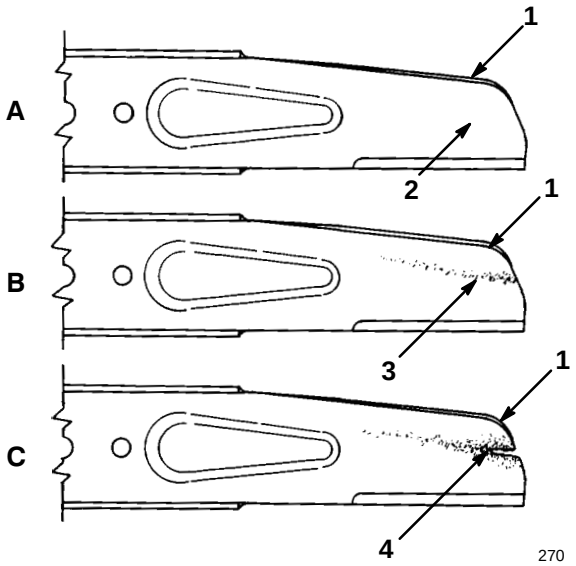

Figure 24

1. Sail
2. Flat part of blade
3. Wear
4. Slot formed

Note: For best performance, install new blade before cutting season begins. During the year, file down small nicks to maintain the cutting edge.

DANGER

POTENTIAL HAZARD
- **A worn or damaged blade could break and a piece of blade could be thrown in operator's or bystander's direction.**

WHAT CAN HAPPEN
- **A thrown piece of blade could cause serious personal injury or death to operator or bystanders.**

HOW TO AVOID THE HAZARD
- **Inspect blade periodically for wear or damage.**
- **Replace a worn or damaged blade.**

4. REMOVING BLADE–Grasp end of blade using a rag or thickly padded glove. Remove blade bolt, washer and blade (Fig. 25).

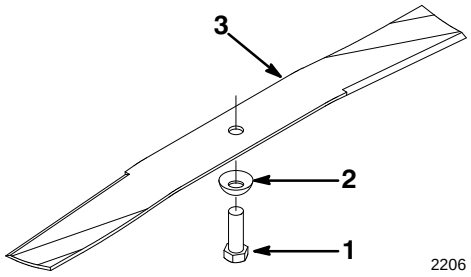

Figure 25

1. Blade bolt
2. Washer
3. Blade

5. SHARPENING BLADE – Using a file, sharpen top side of blade and maintain original cutting angle (Fig. 26). The blade will remain balanced if same amount of material is removed from both cutting edges.

IMPORTANT: Check balance of blade by putting it on a blade balancer. An inexpensive balancer can be purchased at a hardware store. A balanced blade stays in a horizontal position and an unbalanced blade settles to the heavy side. If blade is not balanced, file more metal off cutting edge on heavy end of blade.

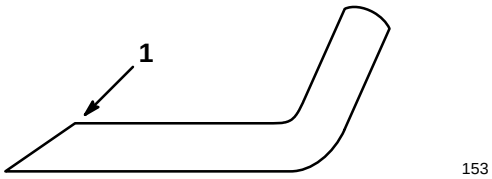

Figure 26

1. Sharpen at this angle only

6. Reinstall sharp, balanced blade, washer and blade bolt. Sail part of blade must point toward top of mower housing to ensure correct installation. Washer is curved and must be reinstalled with curve side down as shown in (Fig. 25). Tighten blade bolt to 35-40 ft-lb (48-54 N · m).

Battery Disposal

Battery Removal

1. Remove four screws from shroud (Fig. 23). Remove shroud.
2. Move control panel out of the way.
3. Remove screw from battery hold-down strap 24 volt models (Fig. 27) or (Fig. 28) 36 volt models.
4. Disconnect positive and negative wires from battery terminals.
5. The bottom of the battery pack is secured with tape to mower housing. Rock battery pack to free batteries from tape.

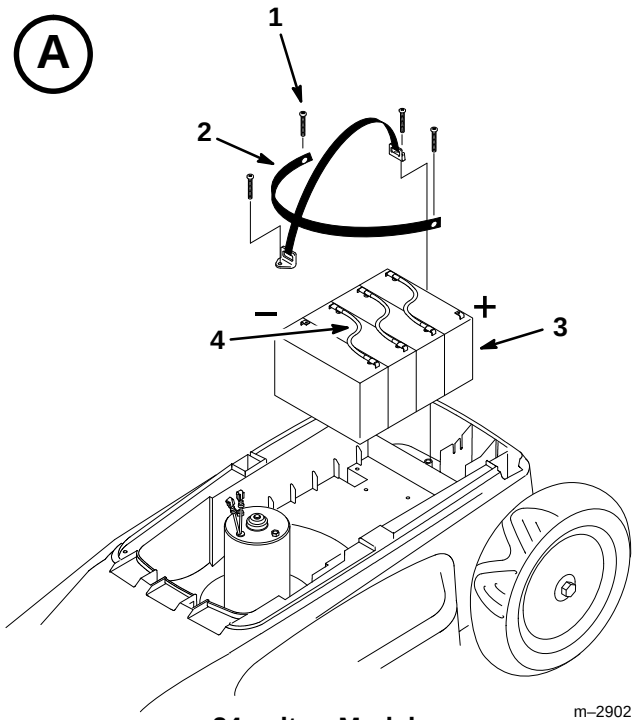

Figure 27

1. Screw (4)
2. Battery hold down strap
3. Battery pack
4. Jumper wire

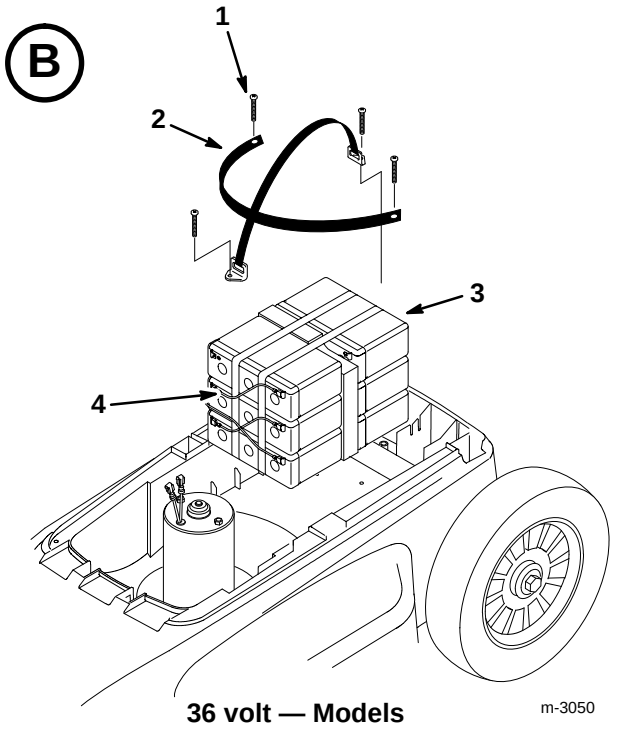

Figure 28

1. Screw (4)
2. Battery hold down strap
3. Battery pack
4. Jumper wire

Disposing of Battery

DO NOT PLACE USED BATTERIES IN YOUR REGULAR TRASH!

THIS SEALED LEAD (ACID) BATTERY MUST BE COLLECTED, RECYCLED OR DISPOSED OF IN AN ENVIRONMENTALLY SOUND MANNER.

The incineration, land filling or mixing of sealed lead (acid) batteries with the municipal solid waste stream is **PROHIBITED BY LAW** in some areas.

Return this battery to a federal or state approved sealed lead (acid) battery recycler. This may be where you purchased the battery.

Contact your local waste management officials for other information regarding the environmentally sound collection, recycling and disposal of this battery.

Servicing Double-insulated Mower

In a double-insulated mower, two systems of insulation are provided instead of grounding. No grounding means is provided on a double-insulated mower, nor should a means for grounding be added to the mower. Servicing a double-insulated mower requires extreme care and knowledge of the system, and should be done only by qualified service personnel. Replacement parts for a double-insulated mower must be identical to the parts they replace. A double-insulated mower is marked with the words “DOUBLE INSULATION” or “DOUBLE INSULATED.” The symbol (square within a square) ⧈ may also be marked on the mower.

Servicing “On/Off” and Blade Brake System

The motor and blade are designed to stop within 3 seconds after releasing the control bail. Ensure that the control bail functions properly before each use of mower. If the blade does not stop within 3 seconds, or if there is a grinding or scraping metal-to-metal noise when the control bail is released, contact your local Authorized Toro Service Dealer for proper “On/Off” and blade brake adjustment or replacement.

Storage

Store mower in a cool, clean, dry place. Cover mower to keep it clean and protected.

1. Clean mower housing. See Cleaning section in Maintenance chapter.
2. Remove grass clippings, dirt and grime from external parts of the shrouding and top of mower housing.
3. Check condition of blade. See Blade section in Maintenance chapter.
4. Tighten all nuts, bolts, and screws.
5. Your mower has been designed to be safe if left continually on charge for extended periods of time. It is recommended that the battery be left continually on charge when it is not in use during the mowing season. During the non-mowing season, the mower can be unplugged and stored if the battery is fully charged.

Gas, Cordless, Electric, and 21" Commercial Duty Walk Mowers

THE TORO PERFORMANCE WARRANTY

A Full Warranty
(Limited Warranty for Commercial Use)

What Is Covered By This Express Warranty?

From the date of purchase, for the periods listed below, the Toro Company promises to repair any Toro Product used for normal residential purposes* if defective in materials or workmanship or if it stops functioning due to the failure of a component.

- Super Recycler® Walk Mowers . 5 year full warranty
- VacuPower™ Walk Mowers .... 5 year full warranty
- All Others ..... 2 year full warranty

The cost of parts and labor is included, but the customer pays the transportation costs.

What Products Are Covered By This Warranty?

This warranty applies to all gas, cordless, and electric consumer walk power mowers.

How About Commercial Use?

Toro Walk Power Mowers used for commercial, institutional or rental use are warranted against defects in material or workmanship. Components failing due to normal wear are not covered by this warranty. The following time periods apply from the date of purchase:

Products	Warranty Period	
	Engine	Entire Unit
• 21" Commercial Duty Walk Mowers	2 year limited	1 year limited
• All Others	45 day limited	45 day limited

How Do You Get Warranty Service?

Should you feel your Toro Product requires warranty service, contact the dealer who sold you the product or any Authorized Toro Service Dealer or Toro Master Service Dealer. The Yellow Pages of your telephone directory is a good reference source. The dealer will either arrange service at his/her dealership or recommend another Authorized Service Dealer who may be more convenient. You may need proof of purchase (copy of registration card, sales receipt, etc.) for warranty validation.

If for any reason you are dissatisfied with the Service Dealer's analysis of the defect in materials or workmanship or if you need a referral to a Toro Service Dealer, please feel free to contact us at the following address:

Toro Customer Service Department
8111 Lyndale Avenue South
Bloomington, MN 55420−1196
612−888−8801
800−348−2424

What Must You Do To Keep The Warranty In Effect?

You must maintain your Toro Product by following the maintenance procedures described in the operator's manual. Such routine maintenance, whether performed by a dealer or by you, is at your expense.

What Does This Warranty Not Cover? and How Does Your State Law Relate To This Warranty?

There is no other express warranty except for special emission system coverage on some products and the Toro Starting Guarantee on GTS Engines. This express warranty does not cover:

- Cost of regular maintenance service or parts, such as filters, fuel, lubricants, oil changes, spark plugs, blade sharpening, blade worn out, cable/linkage adjustments or brake and clutch adjustments.

- Any product or part which has been altered or misused or required replacement or repair due to accidents or lack of proper maintenance.

- Repairs necessary due to improper fuel, contaminants in the fuel system, or failure to properly prepare the fuel system prior to any period of non−use over three months.

- Repairs necessary due to improper battery care, electrical supply irregularities, or failure to properly prepare the mower prior to any period of non−use.

- Pickup and delivery charges.

All repairs covered by this warranty must be performed by an Authorized Toro Service Dealer using Toro approved replacement parts.

Repair by an Authorized Toro Service Dealer is your sole remedy under this warranty.

The Toro Company is not liable for indirect, incidental or consequential damages in connection with the use of the Toro Products covered by this warranty, including any cost or expense of providing substitute equipment or service during reasonable periods of malfunction or non−use pending completion of repairs under this warranty. Some states do not allow exclusions of incidental or consequential damages, so the above exclusion may not apply to you.

This warranty gives you specific legal rights, and you may also have other rights which vary from state to state.

* Normal residential purposes means mowing the lawn on the same lot as your home. Use at more than one location is considered commercial use and the commercial use warranty would apply.

COUNTRIES OTHER THAN THE UNITED STATES OR CANADA

Customers who have purchased Toro products exported from the United States or Canada should contact their Toro Distributor (Dealer) to obtain guarantee policies for your country, province, or state. If for any reason you are dissatisfied with your Distributor's service or have difficulty obtaining guarantee information, contact the Toro importer. If all other remedies fail, you may contact us at The Toro Company.

Rev. 10/21/1998