FORM NO. 3322–282

TORO®

MODEL NO. 30569–90500 & UP
MODEL NO. 30569TE–90500 & UP

PARTS CATALOG

GUARDIAN® 62” RECYCLER®
CUTTING UNIT

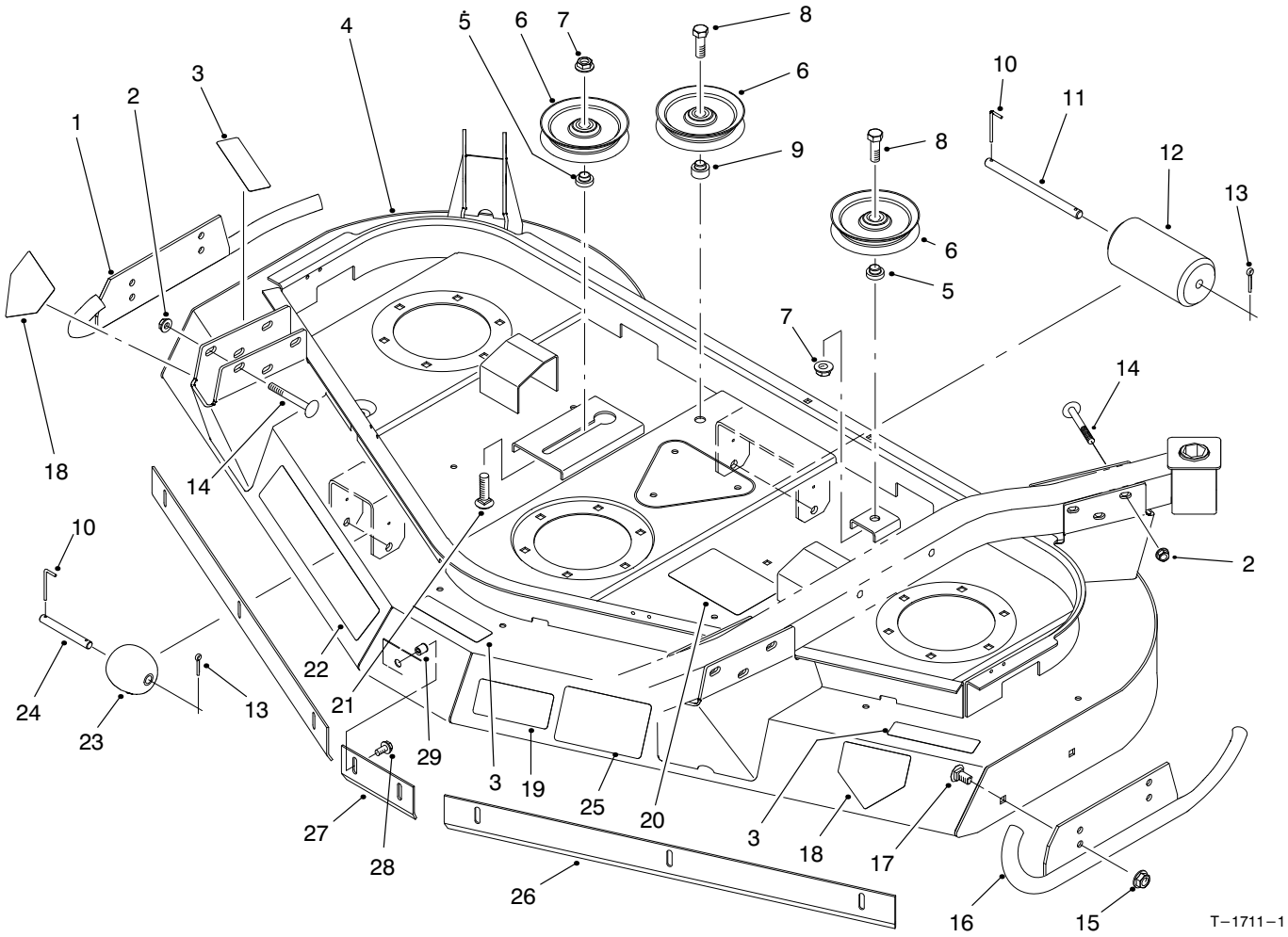

HOUSING & IDLERS ASSEMBLY

Ref. No.	Part No.	Description	No. Used
1	92-5592-01	Skid – RH	1
2	32128–19	Nut – Flange Lock	12
3	85–6410	Decal – Danger	3
3	93–7814	Decal – Warning (Europe)	3
4	92–5571	Asm. – 62” Deck (Incl. Ref. #3, 18–20, 22 & 25)	1
5	69–6960	Spacer – Idler	2
6	63-1540-03	Pulley – Idler	3
7	3296–25	Nut – Flange Lock	2
8	325–6	Screw – HH	2
9	69–6970	Spacer – Idler	1
10	57–0690	Pin – Special	3
11	40–6400	Shaft – Roller	1
12	36–1740	Roller – Deck	1
13	3272–11	Pin – Cotter	3
14	3231–10	Bolt – Carriage	12
15	32128–21	Nut – Flange Lock	4

Ref. No.	Part No.	Description	No. Used
16	92-5589-01	Skid – LH	1
17	3231–1	Bolt – Carriage	4
18	43–8480	Decal – Danger	2
18	93–7815	Decal – Danger (Europe)	2
19	68–8340	Decal – Torque	1
19	93–7818	Decal – Torque (Europe)	1
20	92–4092	Decal – Belt Routing	1
21	3233–30	Bolt – Carriage	1
22	92–4088	Decal – Guardian	1
23	29–4820	Roller	2
24	57–0680	Shaft – Roller	2
25	92–5647	Decal – Warning	1
25	93–7810	Decal – Warning (Europe)	1
26	93-4388-01	Baffle – Side, (Europe)	2
27	93-4389-01	Baffle – Center (Europe)	1
28	3234–5	Screw – Flange (Europe)	8
29	32148–7	Nut – Clinch (Europe)	8

© The TORO Company — 1999
All Rights Reserved

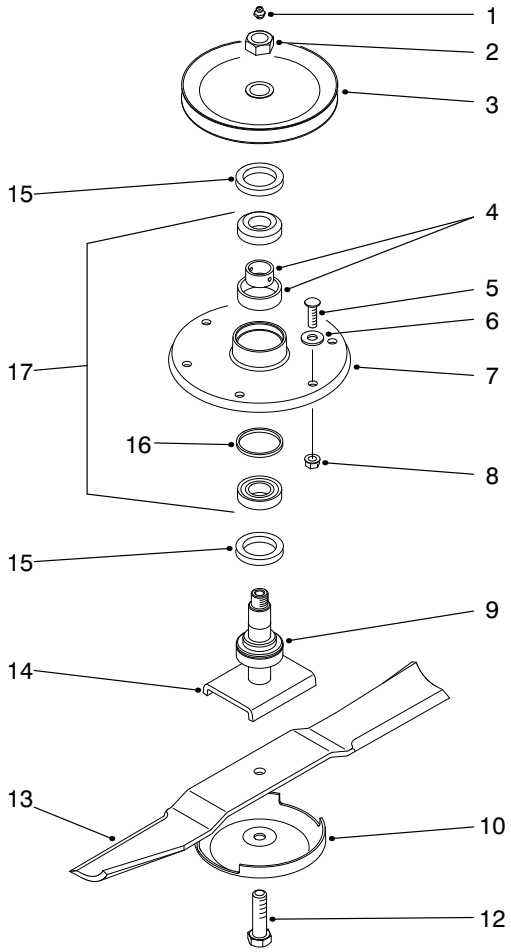

T−1709

SPINDLE ASSEMBLY

Ref. No.	Part No.	Description	No. Used
1	302−2	Fitting − Grease	3
2	32146−20	Nut − Lock	3
3	92-5607-03	Pulley	3
4	27−5970	Spacer Set	3
5	3231−27	Bolt − Carriage	18
6	3256−24	Washer − Flat	A/R
7	61−4160	Housing − Spindle	3
8	32128−21	Nut − Lock	18
9	92−5606	Spacer − Spindle	3
10	72−9361	Cup − Anti−Scalp	3
12	92−5816	Bolt − Blade	3

Ref. No.	Part No.	Description	No. Used
13	92−5608	Blade	3
14	92−5604	Spindle	3
15	253−139	Seal − Oil	6
16		Spacer	3
17	27−0960	Asm. − Bearing (Incl. Ref. #16)	3
*	95−3073	Kit − Blade & Belt (Incl Ref. #13)	1
*	95−3081	Spindle Assembly (Incl. Ref. #1−12 & 14−17)	1

*Not Illustrated

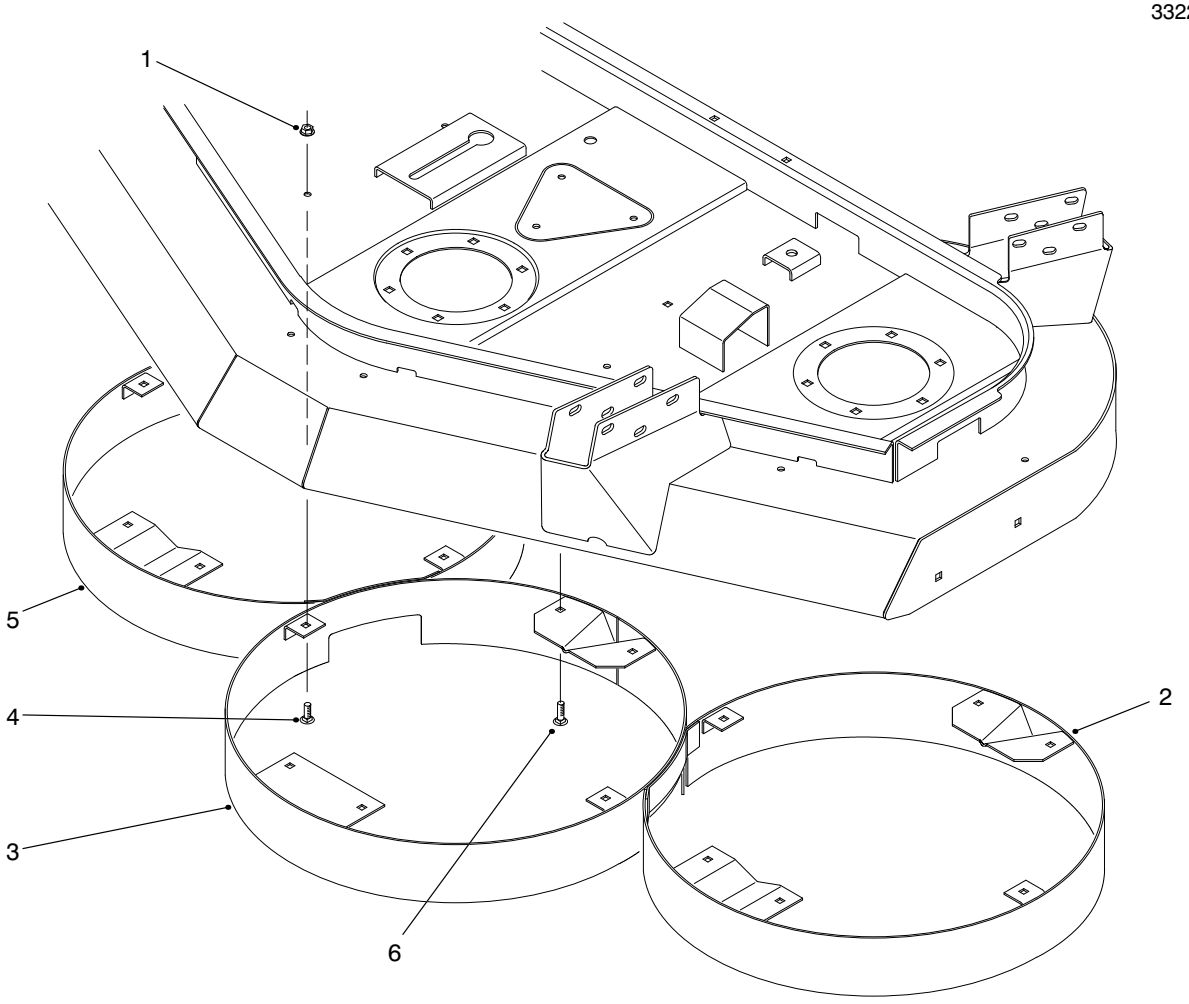

T−1708A

CUTTING CHAMBER INSTALLATION ASSEMBLY

Ref. No.	Part No.	Description	No. Used
1	32128−13	Nut − Flange Lock	18
2	92-5594-01	Chamber − Cutting LH	1
3	92-5600-01	Chamber − Cutting Center	1
4	3230−18	Bolt − Carriage	14
5	92-5602-01	Chamber − Cutting RH	1
6	3230−23	Bolt − Carriage	4

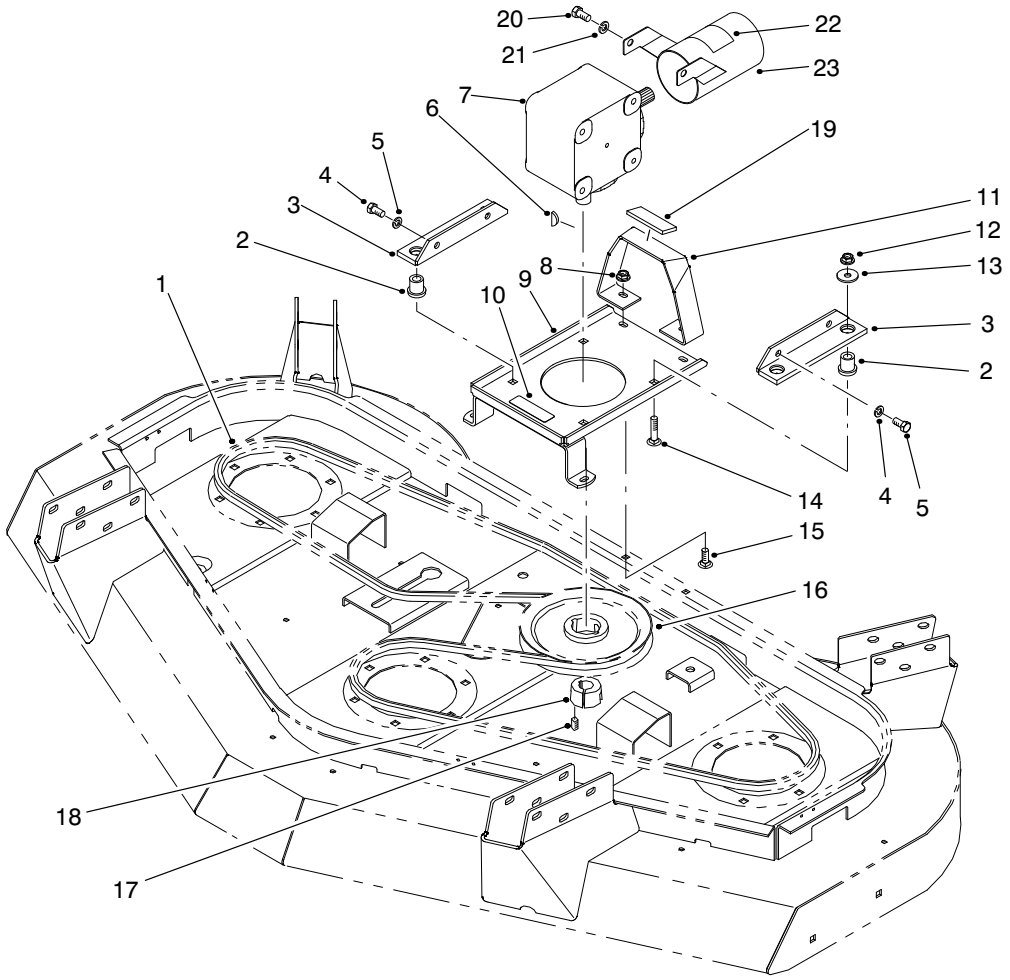

T−1710

GEAR BOX INSTALLATION ASSEMBLY

Ref. No.	Part No.	Description	No. Used
1	92−5588	Belt − V	1
2	63−9750	Mount	4
3	68-8560-03	Bracket − Gear Box	2
4	323−4	Screw − Cap Hex. Hd.	4
5	3253−21	Washer − Lock	4
6	3257−5	Key − Woodruff	1
7	68−6810	Asm. − Gear Box	1
8	32128−13	Nut − Flange Lock	4
9	92−5609	Asm. − Gear Box Plate (Incl. Ref. #10)	1
10	70−2560	Decal − Lube	1
10	93−6697	Decal − Lube (Europe)	1
11	92−5644	Asm. − Gear Box Stand (Incl. Ref. #19)	1
12	32128−21	Nut − Lock	4

Ref. No.	Part No.	Description	No. Used
13	63−8410	Washer	4
14	3231−26	Bolt − Carriage	4
15	3230−22	Bolt − Carriage	4
16	85−5860	Pulley − Gear Box	1
17	3247−4	Screw − Set	2
18	23−1640	Asm. − Taper Lock Bushing (Incl. Ref. #17)	1
19	74−0342	Cushion − Rubber	1
20	323−2	Screw − HH (Europe)	2
21	3253−21	Washer − Lock (Europe)	2
22	93−7283	Decal − Danger (Europe)	1
23	99−8408	Guard − PTO Shaft (Europe) (Incl. Ref. #22)	1
*	95−3073	Kit − Blade & Belt (Incl. Ref. #1)	1

*Not Illustrated

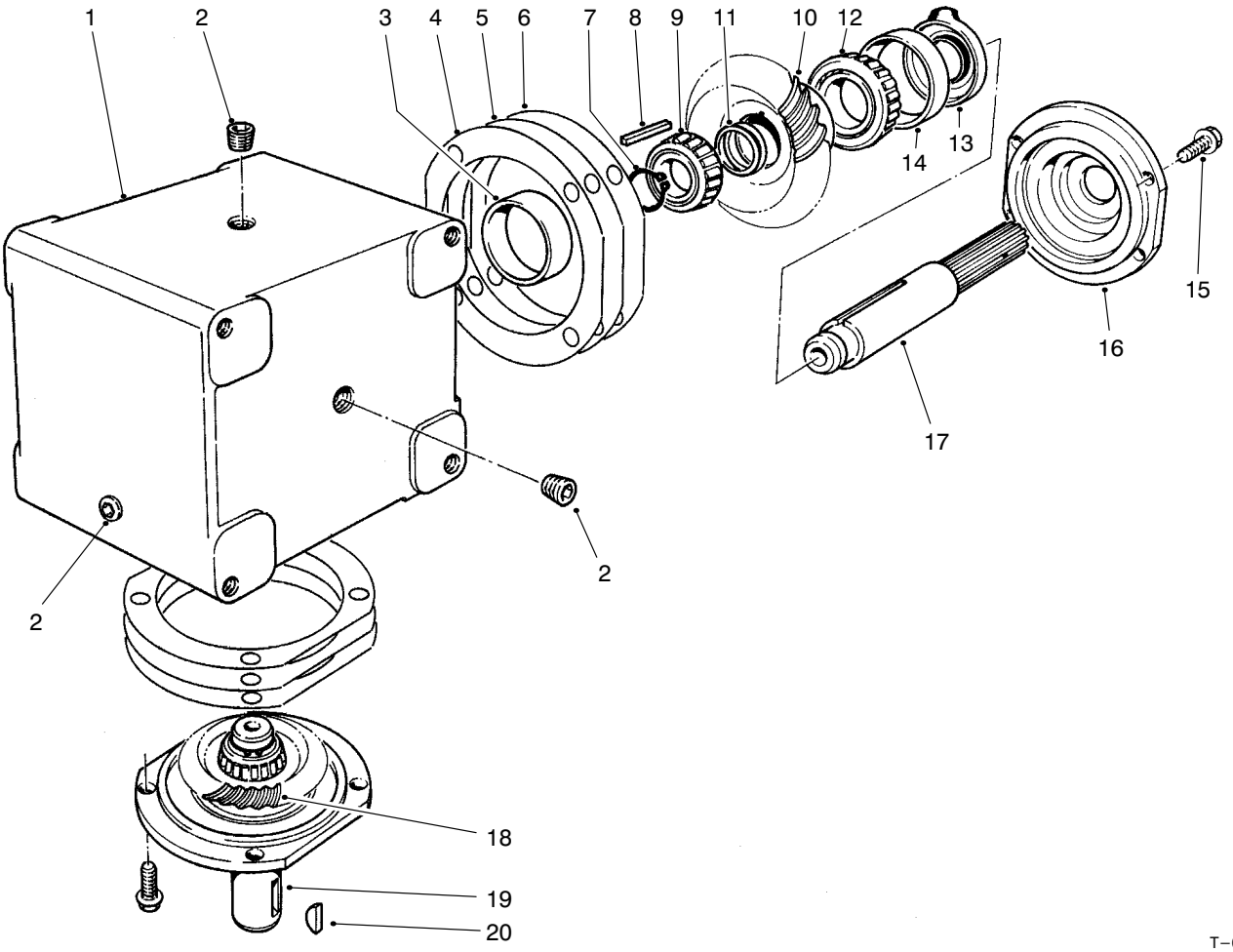

T−0977

GEAR BOX ASSEMBLY NO. 68−6810

Ref. No.	Part No.	Description	No. Used
1	68−7030	Housing	1
2	62−3490	Plug − Pipe (Solid)	4
3	62−3360	Cup − Bearing	2
4	62−3420	Gasket (.015 in.)	A/R
5	62−3430	Gasket (.005 in.)	A/R
6	62−3440	Gasket (.003 in.)	A/R
7	68−7070	Ring − Retaining	2
8	62−3380	Key	2
9	62−3370	Cone − Bearing	2
10	68−7080	Gear	1

Ref. No.	Part No.	Description	No. Used
11	72−9370	Shim (.020 in.)	2
12	62−3330	Cone − Bearing	2
13	62−3400	Seal	2
14	62−3340	Cup − Bearing	2
15	62−3310	Screw − HH	8
16	62−3410	Cap	2
17	68−7040	Shaft	1
18	68−7060	Gear	1
19	68−7050	Shaft	1
20	3257−5	Key	1

3322−282

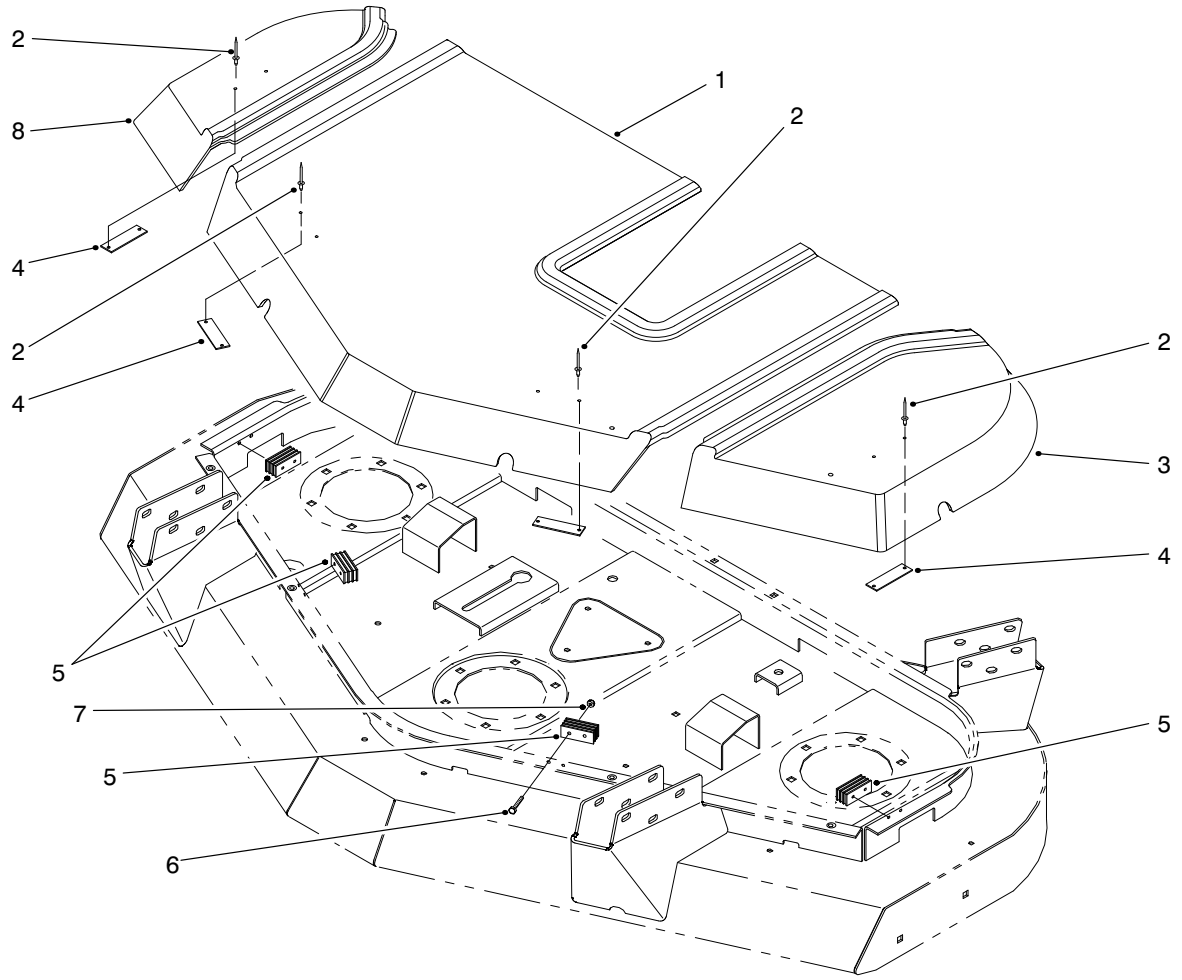

T−1713−3

COVER ASSEMBLY

Ref. No.	Part No.	Description	No. Used
1	92−5620	Cover − Center	1
2	3269−25	Rivet − Pop	8
3	92−5618	Cover − LH	1
4	69−6870	Plate − Magnet	8

Ref. No.	Part No.	Description	No. Used
5	69−6260	Magnet	4
6	32105−1	Screw − HH	8
7	3296−2	Nut − Lock	8
8	92−5619	Cover − RH	1

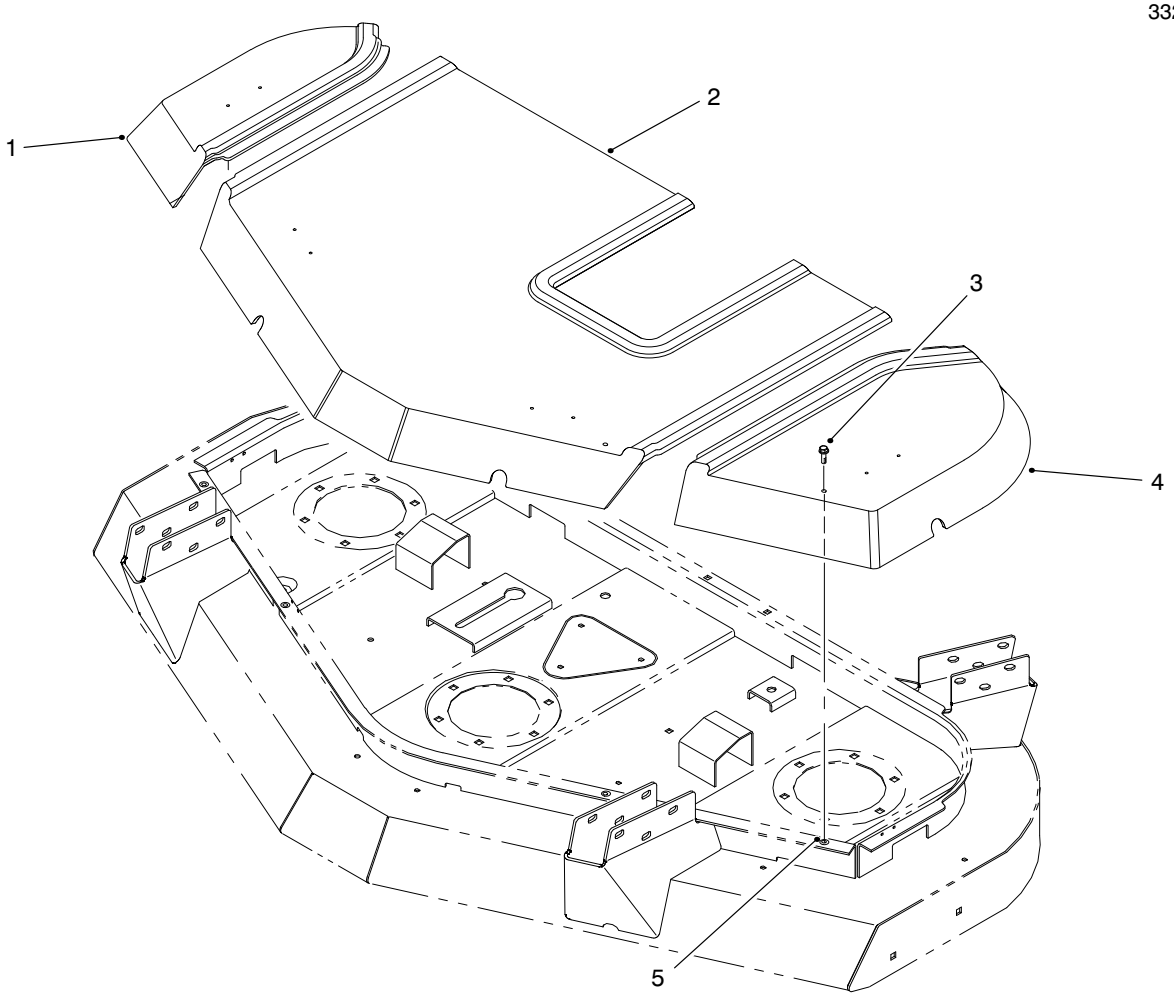

T−2679−1

COVER ASSEMBLY (EUROPE)

Ref. No.	Part No.	Description	No. Used
1	92−5619	Cover − RH	1
2	92−5620	Cover − Center	1
3	3234−5	Screw − Flange	4
4	92−5618	Cover − LH	1
5	32148−7	Nut − Clinch	4

3322−282

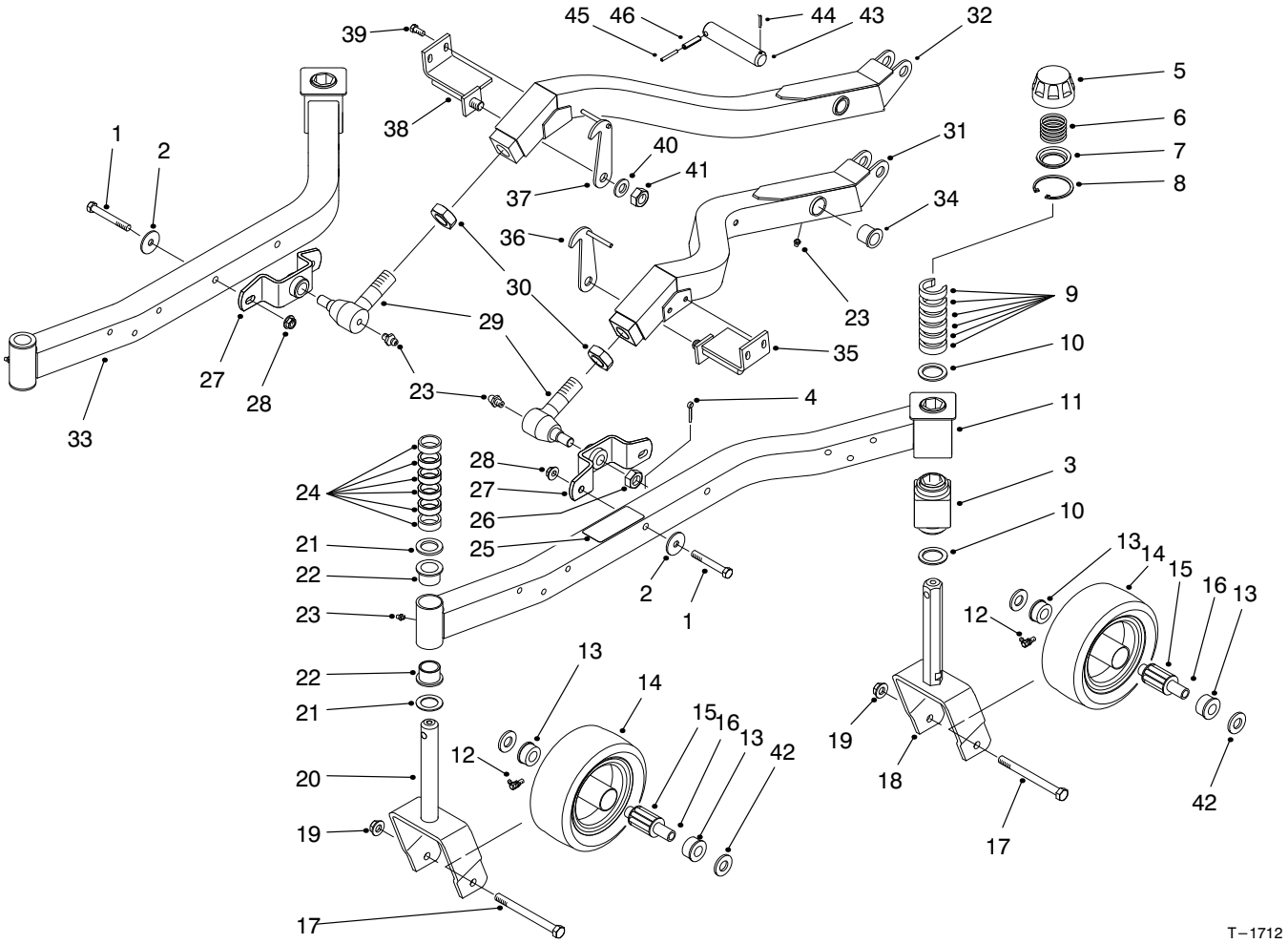

CARRIER FRAME ASSEMBLY

Ref. No.	Part No.	Description	No. Used
1	324−12	Screw − HH	4
2	66−6480	Washer	4
3	93−8471	Bushing − Rubber	2
4	3272−12	Pin − Cotter	2
5	92−8861	Cap − H.O.C.	4
6	92−5584	Spring − Compression	4
7	92−5583	Washer − Cap	4
8	92−5581	Ring − Retaining	4
9	92−8866	Spacer	12
10	92−1765	Washer − Thrust	4
11	92−5573	Asm. − Caster Arm, LH (Incl. Ref. #3, 22, 23 & 25)	1
12	302−40	Fitting − Grease	4
13	62−5580	Bearing − Outer	8
14	85−5760	Asm. − Caster Wheel (Incl. Ref. #12, 13 & 15)	4
15	83−4740	Bearing − Roller	4
16	62−4340	Spanner	4
17	325−22	Screw − HH	4
18	92-5578-01	Fork − Caster Rear	2
19	32128−23	Nut − Flange Lock	4
20	98-7068-01	Fork − Castor Front	2
21	3−6781	Washer − Thrust	4
22	94−1291	Bushing − Flange	4
23	302−5	Fitting − Grease	6
24	63−0070	Spacer	12

Ref. No.	Part No.	Description	No. Used
25	92−4089	Decal − H.O.C.	1
25	93−7826	Decal − H.O.C. (Europe)	1
26	32136−2	Nut − Slotted	2
27	98−7944	Mount − Ball Joint	2
28	32128−42	Nut − Flange Lock	4
29	86−8100	Asm. − Ball Joint (Incl. Ref. #23 & 26)	2
30	21−3000	Nut − Jam	2
31	99−1257	Asm. − Lift Arm, LH (Incl. Ref. #23 & 34)	1
32	99−1254	Asm. − Lift Arm, RH (Incl. Ref. #23 & 34)	1
33	92−5623	Asm. − Caster Arm, RH (Incl. Ref. #3, 22 & 23)	1
34	256−268	Bushing−Flange	4
35	93-9326-01	Bracket − Latch, LH (Europe)	1
36	93-8479-03	Retainer − Deck, LH (Europe)	1
37	93-8478-01	Retainer − Deck, RH (Europe)	1
38	93-9325-01	Bracket − Latch, RH (Europe)	1
39	32144−11	Screw − HH (Europe)	4
40	3290−317	Washer − Wave (Europe)	2
41	3296−33	Nut − Lock (Europe)	2

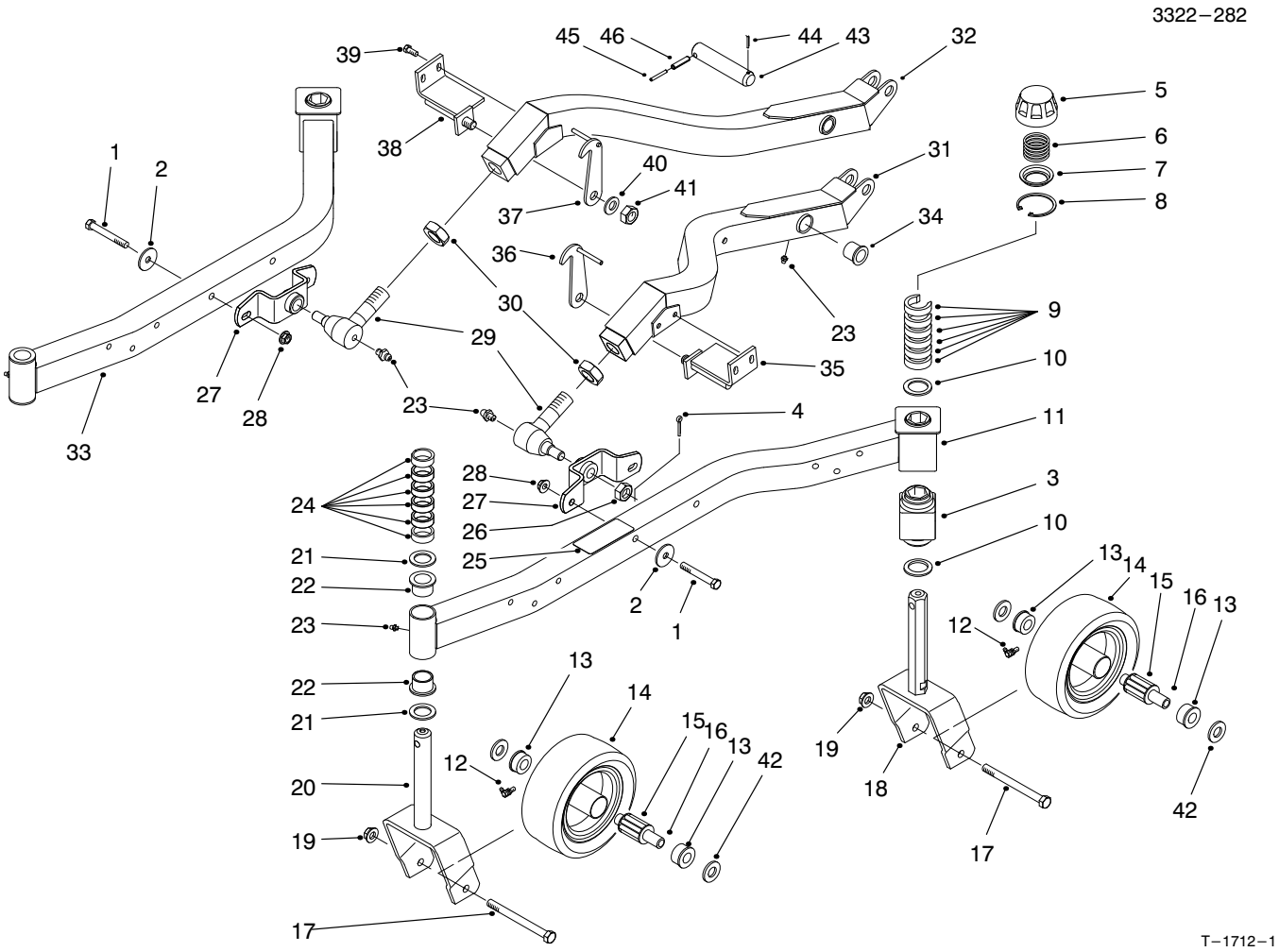

CARRIER FRAME ASSEMBLY (Continued)

Ref. No.	Part No.	Description	No. Used
42	3256−6	Washer − Flat	8
43	98−2330	Pivot Pin Assembly (Incl. Ref. #45 & 46)	2
44	3272−19	Pin−Cotter	2
45	32121−61	Pin−Roll	2
46	32121−67	Pin−Roll	2

Ref. No.	Part No.	Description	No. Used
*	92−8862	Asm. − Cap, H.O.C. (Incl. Ref.#5−8)	1
*	95−3076	Castor Wheel Set (4 Wheels) (Incl. Ref. #12−17, 19 & 42)	1

*Not Illustrated

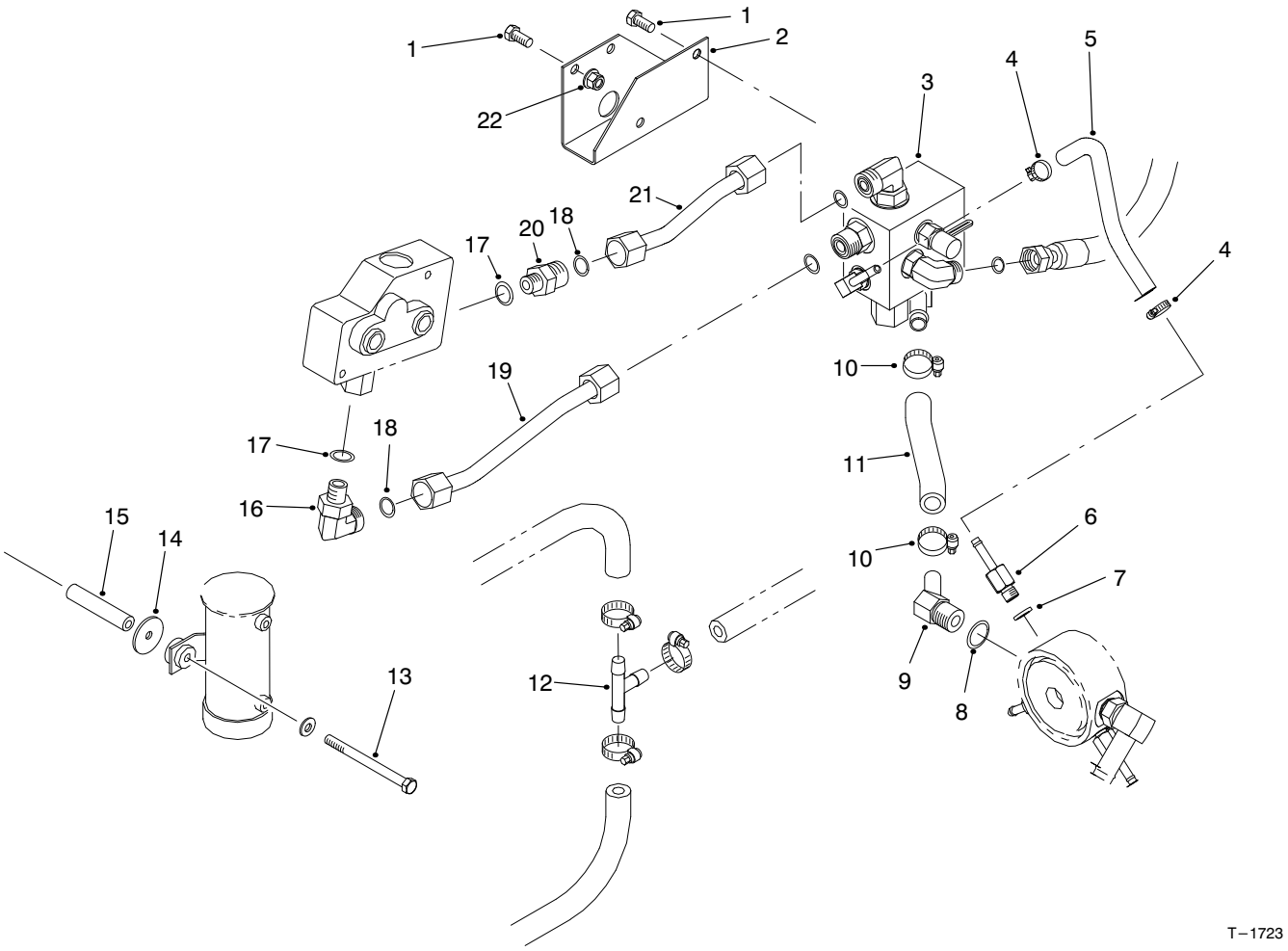

T−1723

COUNTERBALANCE MANIFOLD INSTALLATION ASSEMBLY

Ref. No.	Part No.	Description	No. Used
1	3234−14	Screw − HH	4
2	92-5635-01	Bracket − Manifold	1
3	92−5638	Asm. − Manifold Block	1
4	2412−108	Clamp − Hose	2
5	65−2970	Hose − Hydraulic	1
6	92−5512	Fitting − Hydraulic Straight (Incl. Ref. #7)	1
7	237−78	O−Ring	1
8	237−79	O−Ring	1
9	354−126	Fitting − Hydraulic 90° (Incl. Ref. #8)	1
10	2412−36	Clamp − Hose	2
11	92−5639	Hose − Hydraulic	1
12	354−107	Fitting − Hydraulic Tee	1
13	321−24	Screw − HH	2

Ref. No.	Part No.	Description	No. Used
14	3256−55	Washer − Flat	2
15	92−5634	Spacer − Fuel Pump	2
16	340−99	Fitting − Hydraulic 90° (Incl. Ref. #17 & 18)	1
17	237−42	O−Ring	2
18	237−30	O−Ring	2
19	92−5637	Tube − Hydraulic	1
20	340−5	Fitting − Hydraulic Straight (Incl. Ref. #17 & 18)	1
21	92−5636	Tube − Hydraulic	1
22	32128−13	Nut − Flange Lock	2
*†	92−5640	Fitting − Hydraulic Cross (Incl. O−Ring No. 237−80) (For use on 2wd units only)	1

*Not Illustrated

†Item not included with cutting unit.

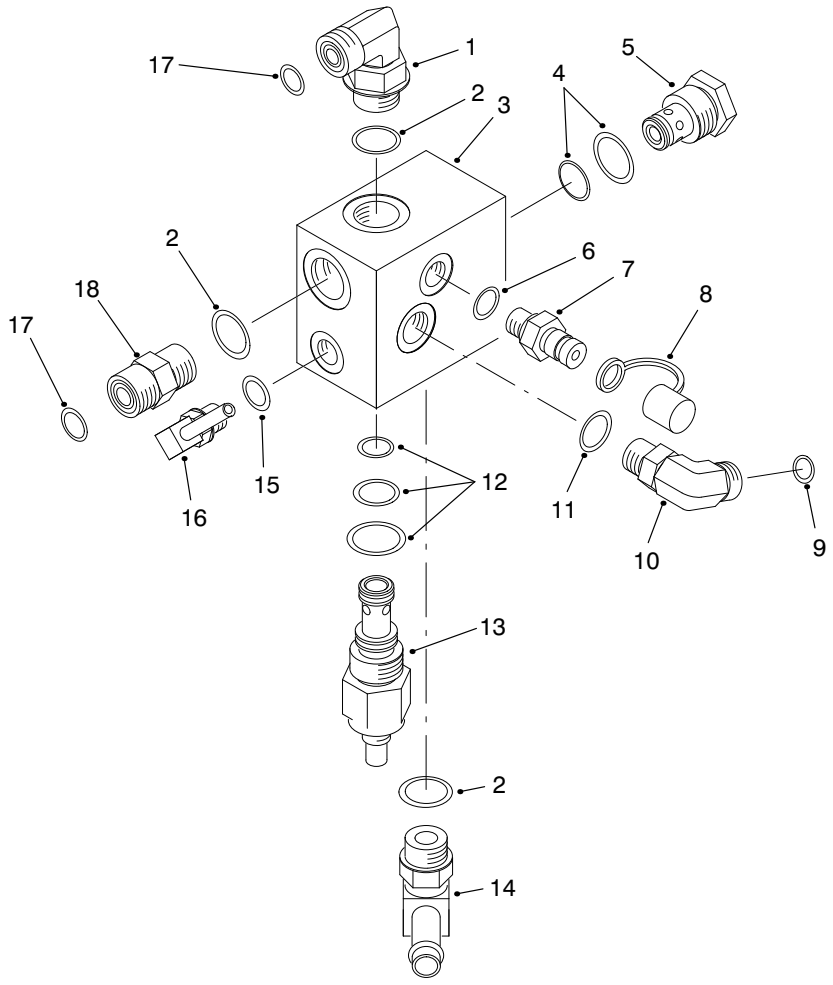

T−1722

COUNTERBALANCE MANIFOLD ASSEMBLY NO. 92−5638

Ref. No.	Part No.	Description	No. Used
1	340−98	Fitting − Hydraulic 90˚ (Incl. Ref. #2 & 17)	1
2	237−79	O−Ring	3
3		Block − Manifold	1
4	75−2080	Kit − Seal	1
5	92−5645	Asm. − Relief Cartridge (Incl. Ref. #4)	1
6	237−78	O−Ring	1
7	354−77	Fitting − Diagnostic (Incl. Ref. #6)	1
8	353−947	Cap − Dust	1
9	237−22	O−Ring	1
10	340−77	Fitting − Hydraulic 90˚ (Incl. Ref. #9 & 11)	1

Ref. No.	Part No.	Description	No. Used
11	237−42	O−Ring	1
12	69−4240	Kit − Seal	1
13	92−5646	Asm. − Logic Cartridge (Incl. Ref. #12)	1
14	354−120	Fitting − Hydraulic 90˚ (Incl. Ref. #2)	1
15	237−78	O−Ring	1
16	304−99	Fitting − Hydraulic 90˚ (Incl. Ref. #15)	1
17	237−30	O−Ring	2
18	340−4	Fitting − Hydraulic Straight (Incl. Ref. #2 & 17)	1

3322−282

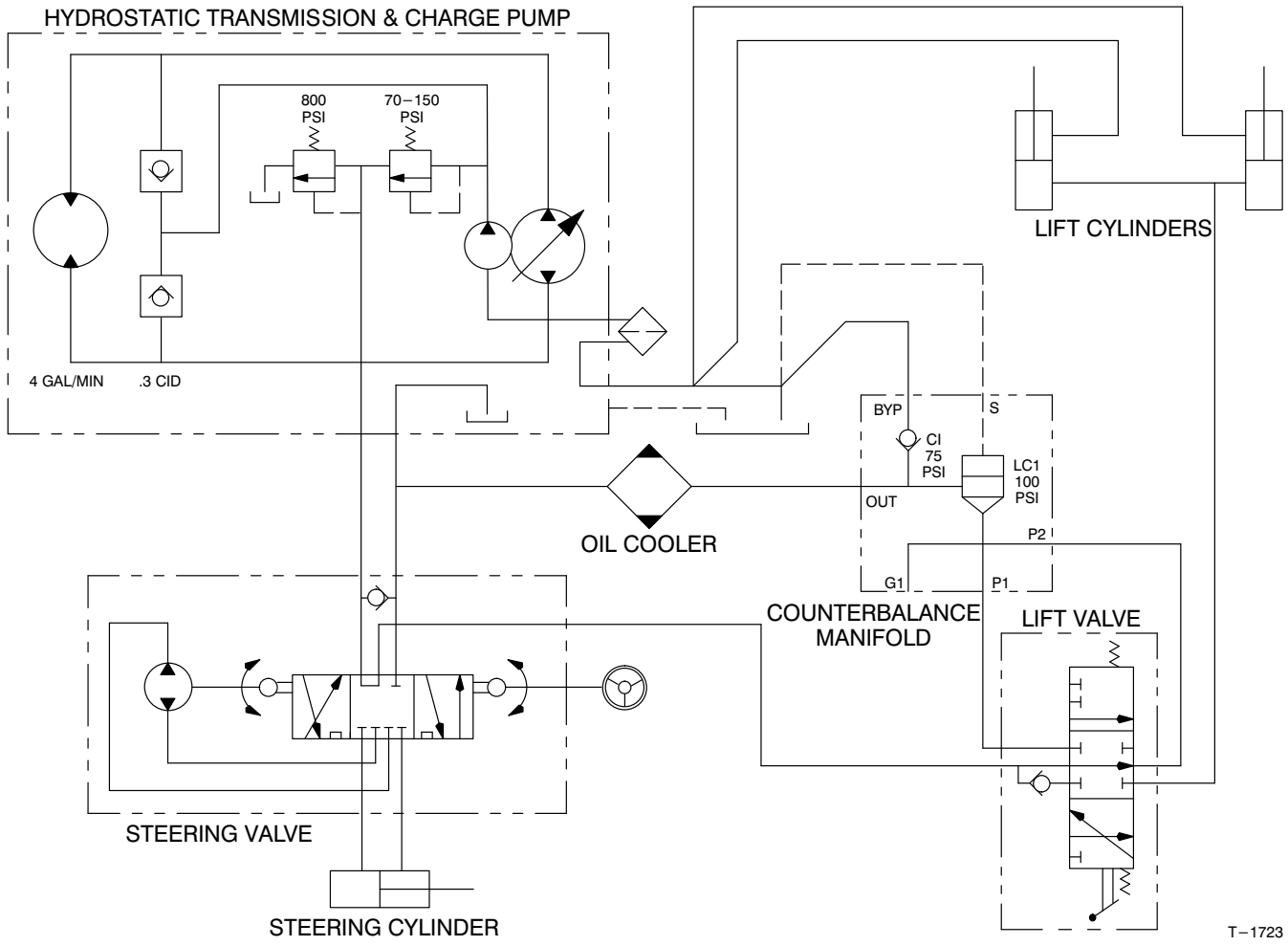

HYDRAULIC SCHEMATIC

Ref. No.	Part No.	Description	No. Used

Ref. No.	Part No.	Description	No. Used