Form No. 3424-342 Rev A

TORO®

Count on it.

Operator's Manual

Reelmaster® 5410 and 5510 Traction Unit

Model No. 03675—Serial No. 403280001 and Up
Model No. 03676—Serial No. 403280001 and Up

Register at www.Toro.com.
Original Instructions (EN)

CE

3424-342 A

This product complies with all relevant European directives; for details, please see the separate product specific Declaration of Conformity (DOC) sheet.

It is a violation of California Public Resource Code Section 4442 or 4443 to use or operate the engine on any forest-covered, brush-covered, or grass-covered land unless the engine is equipped with a spark arrester, as defined in Section 4442, maintained in effective working order or the engine is constructed, equipped, and maintained for the prevention of fire.

The enclosed engine owner's manual is supplied for information regarding the US Environment Protection Agency (EPA) and the California Emission Control Regulation of emission systems, maintenance, and warranty. Replacement may be ordered through the engine manufacturer.

⚠ WARNING

CALIFORNIA
Proposition 65 Warning

Diesel engine exhaust and some of its constituents are known to the State of California to cause cancer, birth defects, and other reproductive harm.

Battery posts, terminals, and related accessories contain lead and lead compounds, chemicals known to the State of California to cause cancer and reproductive harm. Wash hands after handling.

Use of this product may cause exposure to chemicals known to the State of California to cause cancer, birth defects, or other reproductive harm.

Introduction

This machine is a ride-on, reel-blade lawn mower intended to be used by professional, hired operators in commercial applications. It is primarily designed for cutting grass on well-maintained turf.

Read this information carefully to learn how to operate and maintain your product properly and to avoid injury and product damage. You are responsible for operating the product properly and safely.

Visit www.Toro.com for more information, including safety tips, training materials, accessory information, help finding a dealer, or to register your product.

Whenever you need service, genuine Toro parts, or additional information, contact an Authorized Service Dealer or Toro Customer Service and have the model and serial numbers of your product ready. Figure 2 identifies the location of the model and serial numbers on the product. Write the numbers in the space provided.

Important: **With your mobile device, you can scan the QR code on the serial number plate (if equipped) to access warranty, parts, and other product information.**

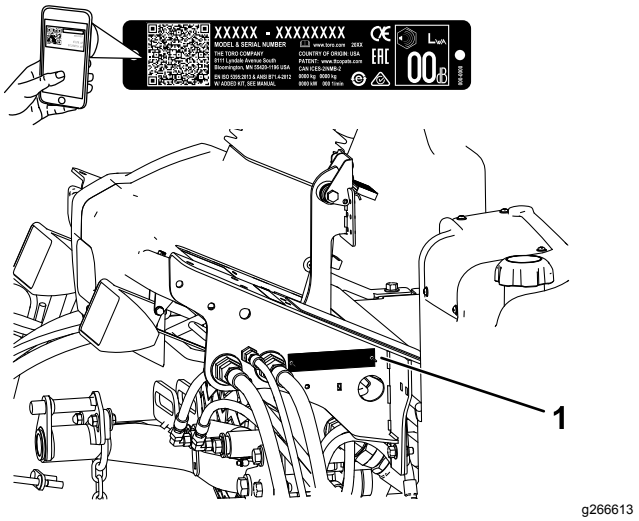

g266613

Figure 1

1. Model and serial number location

Model No. _____

Serial No. _____

This manual identifies potential hazards and has safety messages identified by the safety-alert symbol (Figure 2), which signals a hazard that may cause serious injury or death if you do not follow the recommended precautions.



g000502

Figure 2

1. Safety-alert symbol

This manual uses 2 words to highlight information. **Important** calls attention to special mechanical information and **Note** emphasizes general information worthy of special attention.

© 2018—The Toro® Company
8111 Lyndale Avenue South
Bloomington, MN 55420

Contact us at www.Toro.com.
Printed in the USA
All Rights Reserved

Contents

Safety 4
General Safety 4
Safety and Instructional Decals 5
Setup 10
1 Adjusting the Tire Pressure 10
2 Adjusting the Control-Arm Position 11
3 Installing the Cutting Units 11
4 Adjusting the Turf-Compensation Spring 14
5 Installing the CE Hood Latch 15
6 Using the Cutting-Unit Kickstand 15
Product Overview 16
Controls 16
Specifications 23
Attachments/Accessories 23
Before Operation 24
Before Operation Safety 24
Performing Daily Maintenance 24
Filling the Fuel Tank 24
During Operation 25
During Operation Safety 25
Starting and Stopping the Engine 27
Adjusting the Lift-Arm Counterbalance 27
Adjusting the Lift-Arm Turnaround Position 27
Setting the Reel Speed 28
Understanding the Diagnostic Light 29
Checking the Interlock Switches 29
Hydraulic Valve Solenoid Functions 30
Operating Tips 30
After Operation 31
After Operation Safety 31
Pushing or Towing the Machine 31
Locating the Jacking Points 32
Maintenance 33
Maintenance Safety 33
Recommended Maintenance Schedule(s) 33
Daily Maintenance Checklist 35
Lubrication 36
Greasing the Bearings and Bushings 36
Engine Maintenance 37
Engine Safety 37
Checking the Engine-Oil Level 37
Servicing the Air Cleaner 38
Servicing the Engine Oil and Filter 39
Adjusting the Throttle 40
Fuel System Maintenance 40
Draining the Fuel Tank 40
Checking the Fuel Lines and Connections 40
Servicing the Water Separator 40
Cleaning the Fuel Pick-up Tube Screen 41
Bleeding the Fuel System 41
Electrical System Maintenance 41
Electrical System Safety 41
Servicing the Battery 41
Fuses 42
Drive System Maintenance 42
Checking the Torque of the Wheel Nuts 42
Adjusting the Traction Drive for Neutral 42
Adjusting the Rear Wheel Toe-in 43
Cooling System Maintenance 44
Cooling System Safety 44
Checking the Cooling System 44
Removing Debris from the Cooling System 44
Brake Maintenance 46
Adjusting the Parking Brakes 46
Adjusting the Parking-Brake Latch 46
Belt Maintenance 47
Tensioning the Alternator Belt 47
Hydraulic System Maintenance 47
Hydraulic System Safety 47
Checking the Hydraulic-Fluid Level 48
Changing the Hydraulic Fluid 48
Replacing the Hydraulic Filters 49
Checking the Hydraulic Lines and Hoses 50
Testing the Pressure in the Hydraulic Circuits 50
Cutting Unit System Maintenance 51
Blade Safety 51
Checking the Reel-to-Bedknife Contact 51
Backlapping the Cutting Units 51
Storage 53
Preparing the Traction Unit 53
Preparing the Engine 53

Safety

This machine has been designed in accordance with EN ISO 5395:2017 (when appropriate decals are applied) and ANSI B71.4-2017.

General Safety

This product is capable of amputating hands and feet and of throwing objects.

Using this product for purposes other than its intended use could prove dangerous to you and bystanders.

- Read and understand the contents of this *Operator's Manual* before starting the engine.
- Use your full attention while operating the machine. Do not engage in any activity that causes distractions; otherwise, injury or property damage may occur.
- Do not put your hands or feet near moving components of the machine.
- Do not operate the machine without all guards and other safety protective devices in place and functioning properly on the machine.
- Keep children, bystanders, and pets out of the operating area. Never allow children to operate the machine.
- Always shut off the engine, remove the key (if equipped), wait for all moving parts to stop, and allow the machine to cool before adjusting, servicing, cleaning, or storing the machine.

Improperly using or maintaining this machine can result in injury. To reduce the potential for injury, comply with these safety instructions and always pay attention to the safety-alert symbol ⚠, which means Caution, Warning, or Danger—personal safety instruction. Failure to comply with these instructions may result in personal injury or death.

Safety and Instructional Decals

Safety decals and instructions are easily visible to the operator and are located near any area of potential danger. Replace any decal that is damaged or lost.



decal133-8062

133-8062

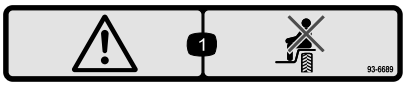

decal93-6689

93-6689

1. Warning—do not carry passengers.

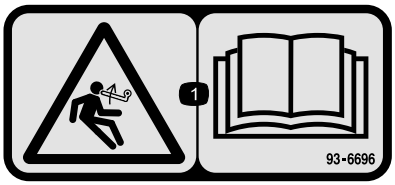

decal93-6696

93–6696

1. Stored energy hazard—read the *Operator's Manual*.

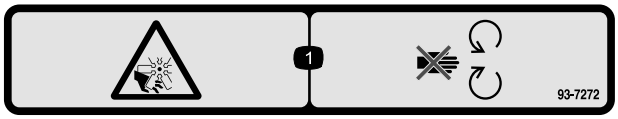

decal93-7272

93-7272

1. Cutting/dismemberment hazard; fan—stay away from moving parts.

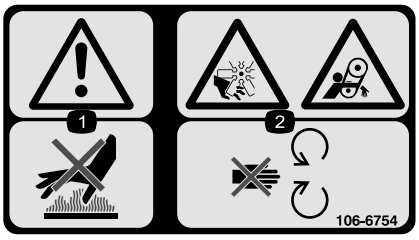

decal106-6754

106-6754

1. Warning—do not touch the hot surface.
2. Cutting/dismemberment hazard, fan; entanglement hazard, belt—stay away from moving parts.



decal106-6755

106-6755

1. Engine coolant under pressure.
2. Explosion hazard—read the *Operator's Manual*.
3. Warning—do not touch the hot surface.
4. Warning—read the *Operator's Manual*.

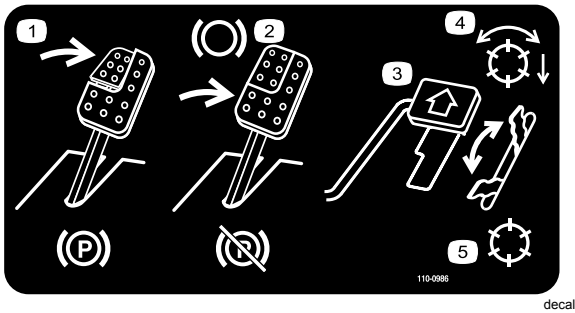

decal110-0986

110-0986

1. Press the brake pedal and parking brake pedal to set the parking brake.
2. Press the brake pedal to apply the brake.
3. Press the traction pedal to move the machine forward.
4. Reel enabled mode
5. Transport mode

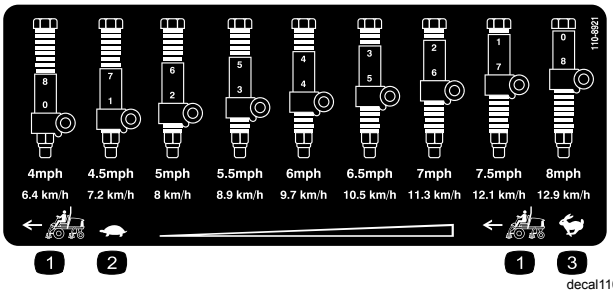

decal110-8921

110-8921

1. Traction unit speed
2. Slow
3. Fast

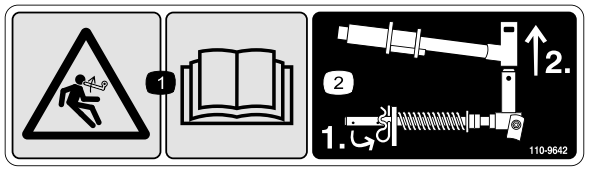

decal110-9642

110-9642

1. Stored energy hazard—read the *Operator's Manual.*
2. Move the cotter pin to the hole closest to the rod bracket and then remove the lift arm and pivot yoke.

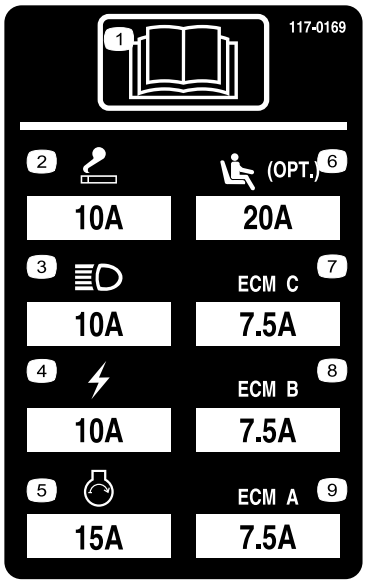

r:\decal117-0169

117-0169

1. Read the *Operator's Manual*.
2. Lighter
3. Headlights
4. Electric
5. Engine start
6. Air ride seat suspension (optional)
7. Engine computer management C
8. Engine computer management B
9. Engine computer management A

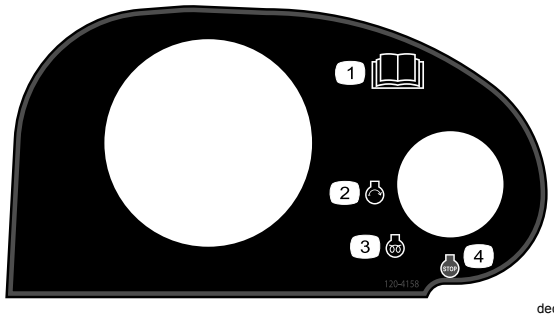

decal120-4158

120–4158

1. Read the *Operator's Manual*.
2. Engine—start
3. Engine—preheat
4. Engine—stop



decalbatterysymbols

Battery Symbols

Some or all of these symbols are on your battery

1. Explosion hazard
2. No fire, open flame, or smoking.
3. Caustic liquid/chemical burn hazard
4. Wear eye protection
5. Read the *Operator's Manual.*
6. Keep bystanders a safe distance from the battery.
7. Wear eye protection; explosive gases can cause blindness and other injuries
8. Battery acid can cause blindness or severe burns.
9. Flush eyes immediately with water and get medical help fast.
10. Contains lead; do not discard.

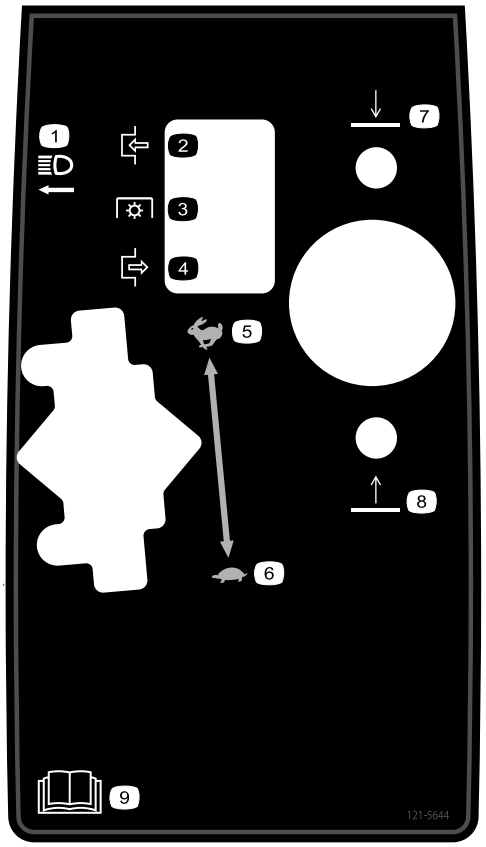

decal121-5644

121–5644

1. Light switch
2. Engage
3. Power take-off
4. Disengage
5. Fast
6. Slow
7. Lower
8. Raise
9. Read the *Operator's Manual*.

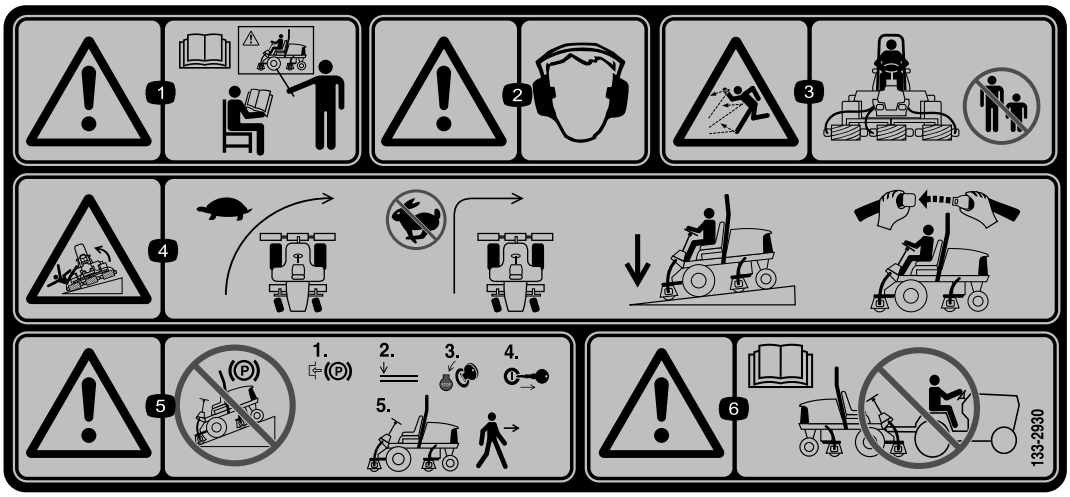

decal133-2930

133-2930

1. Warning—do not operate this machine unless you are trained.
2. Warning—wear hearing protection.
3. Thrown object hazard—keep bystanders away.
4. Tipping hazard—drive slowly when turning; do not turn sharply while traveling fast; only drive on slopes with the cutting units lowered; always wear a seatbelt.
5. Warning—do not park on slopes; engage the parking brake, lower the cutting units, shut off the engine, and remove the ignition key before leaving the machine.
6. Warning—read the *Operator's Manual*; do not tow the machine.



decal133-2931

133-2931

Note: This machine complies with the industry standard stability test in the static lateral and longitudinal tests with the maximum recommended slope indicated on the decal. Review the instructions for operating the machine on slopes in the *Operator's Manual* as well as the conditions in which you would operate the machine to determine whether you can operate the machine in the conditions on that day and at that site. Changes in the terrain can result in a change in slope operation for the machine. If possible, keep the cutting units lowered to the ground while operating the machine on slopes. Raising the cutting units while operating on slopes can cause the machine to become unstable.

1. Warning—read the *Operator's Manual*; do not operate this machine unless you are trained.
2. Warning—wear hearing protection.
3. Thrown object hazard—keep bystanders away.
4. Tipping hazard—do not drive across or down slopes greater than 15°; only drive on slopes with the cutting units lowered; always wear a seatbelt.
5. Warning—do not park on slopes; engage the parking brake, lower the cutting units, shut off the engine, and remove the ignition key before leaving the machine.
6. Warning—read the *Operator's Manual*; do not tow the machine.

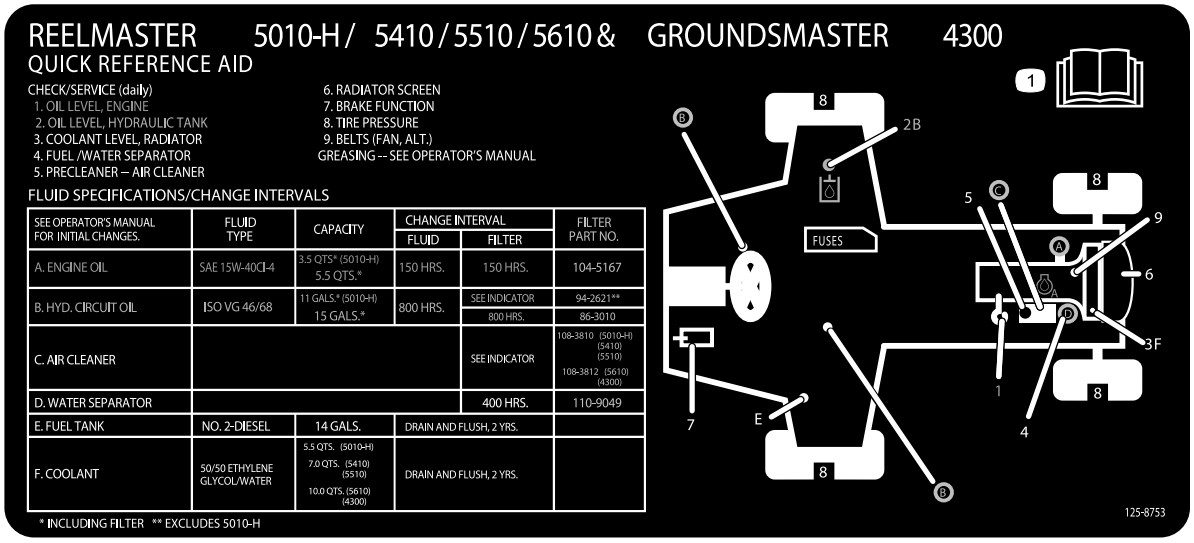

decal125-8753

125-8753

1. Read the *Operator's Manual* for more maintenance information.

Setup

Loose Parts

Use the chart below to verify that all parts have been shipped.

Procedure	Description	Qty.	Use
1	No parts required	–	Adjust the tire pressure.
2	No parts required	–	Adjust the control-arm position.
3	Right front hose guide Left front hose guide	1 1	Install the cutting units.
4	No parts required	–	Adjust the turf-compensation spring.
5	Hood latch assembly Washer	1 1	Install the CE hood latch.
6	Cutting-unit kickstand	1	Install the cutting-unit kickstand.

Media and Additional Parts

Description	Qty.	Use
Operator's Manual Engine Operator’s Manual	1 1	Read the manuals before operating the machine.
Declaration of Conformity	1	This document indicates conformity with certain standards.
Operator training material	1	Review the training material before operating the machine.

Note: Determine the left and right sides of the machine from the normal operating position.

1

Adjusting the Tire Pressure

No Parts Required

Procedure

The tires are over-inflated for shipping. Therefore, release some of the air to reduce the pressure. Correct air pressure in the front and rear tires is 83 to 103 kPa (12 to 15 psi).

Important: **Maintain even pressure in all tires to ensure that there is uniform contact with the turf.**

2

Adjusting the Control-Arm Position

No Parts Required

Procedure

The control-arm position can be adjusted for the operators comfort.

1. Loosen the 2 bolts securing the control arm to the retaining bracket (Figure 3).

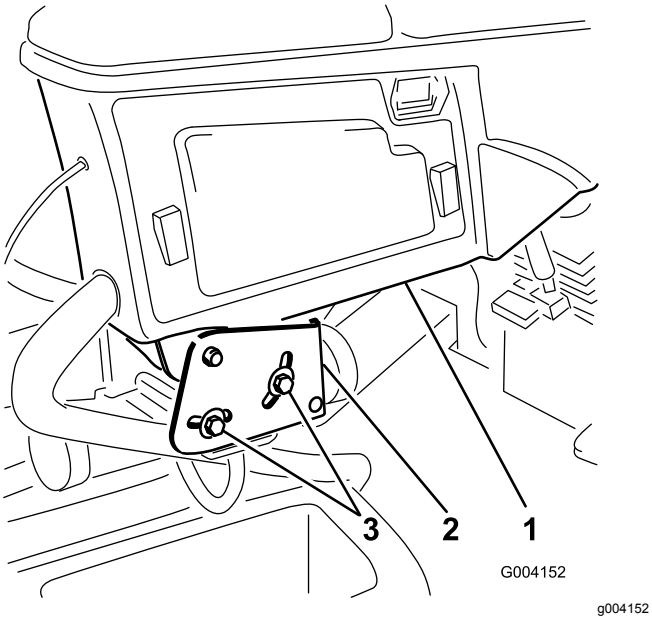

Figure 3

1. Control arm
2. Retaining brackets
3. Bolts

2. Rotate the control arm to the desired position and tighten the 2 bolts.

3

Installing the Cutting Units

Parts needed for this procedure:

1	Right front hose guide
1	Left front hose guide

Procedure

1. Remove the reel motors from the shipping brackets.
2. Remove the shipping brackets and discard.
3. Remove the cutting units from the cartons. Assemble and adjust as described in the cutting unit *Operator's Manual*.
4. Make sure the counter weight (Figure 4) is installed to the proper end of the cutting unit as described in the cutting unit *Operator's Manual*.

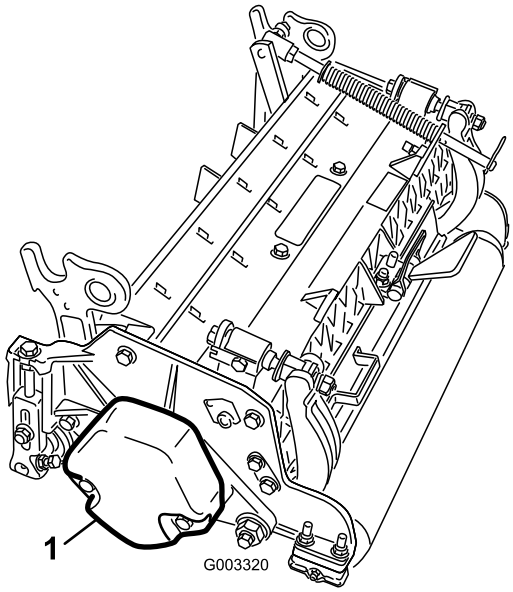

Figure 4

1. Counter weight

5. Mount the turf-compensation spring to the same side of the cutting unit as the reel-drive motor. Reposition the turf-compensation spring as follows:

   Note: All cutting units are shipped with the turf-compensation spring mounted to the right side of the cutting unit.

   A. Remove the 2 carriage bolts and nuts securing the rod bracket to the cutting-unit tabs (Figure 5).

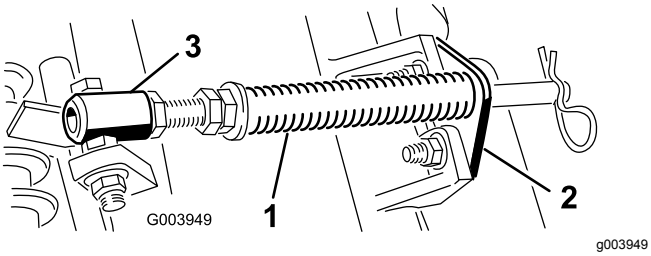

Figure 5

1. Turf-compensation spring
2. Rod bracket
3. Spring tube

B. Remove the flange nut securing the spring-tube bolt to the carrier-frame tab (Figure 5) Remove the assembly.

C. Mount the spring-tube bolt to the opposite tab on the carrier frame and secure with the flange nut. The bolt head is to be positioned to the outer side of the tab as shown in Figure 6.

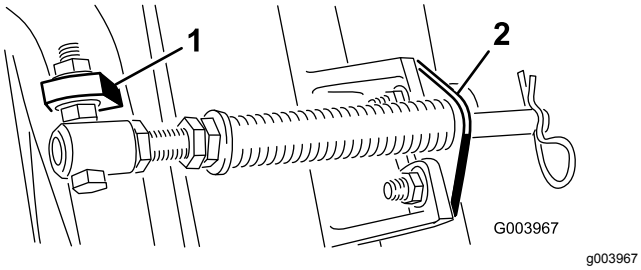

Figure 6

1. Opposite carrier-frame tab
2. Rod bracket

D. Mount the rod bracket to the cutting-unit tabs with the carriage bolts and nuts (Figure 6).

Important: **On the #4 (left front) and #5 (right front) cutting units (Figure 7), use the rod-bracket mounting nuts to install the hose guides to the front of the cutting-unit tabs (Figure 8). The hose guides should lean toward the center cutting unit (Figure 8 and Figure 9).**

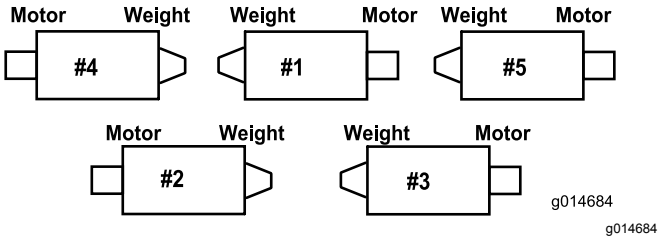

Figure 7

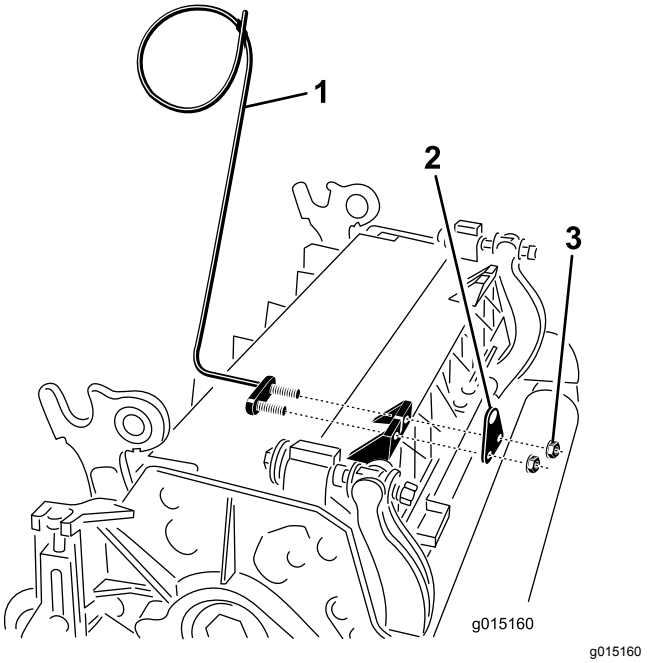

Figure 8

1. Hose guide (cutting unit 4 shown)
2. Rod bracket
3. Nut

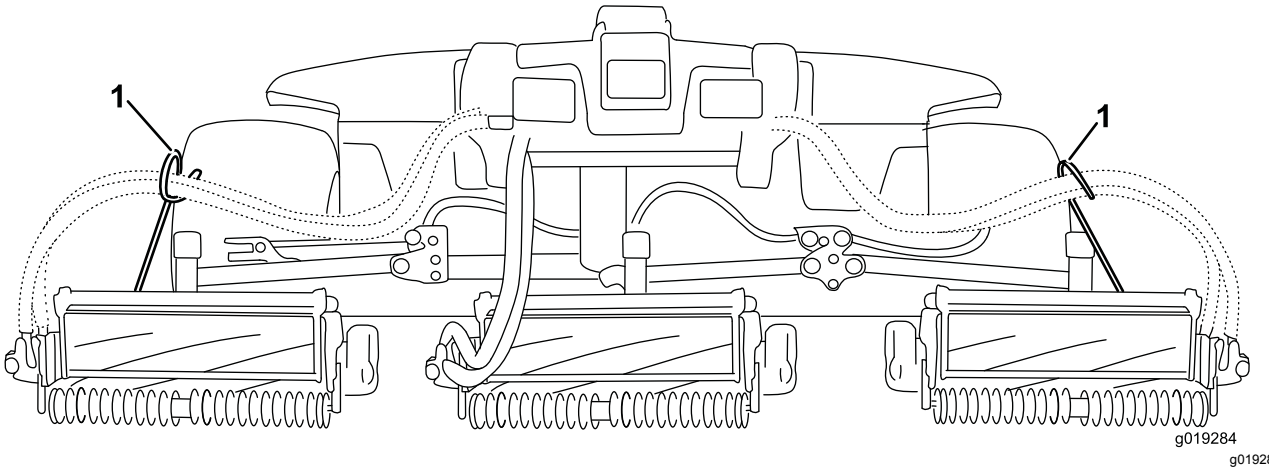

Figure 9

1. Hose guides must lean toward the center cutting unit.

Note: When installing or removing the cutting units, make sure the hairpin cotter is installed in the spring rod hole next to the rod bracket. Otherwise, the hairpin cotter must be installed in the hole in the end of the rod.

6. Lower all lift arms completely.
7. Remove the snapper pin and the cap from the lift-arm pivot yoke (Figure 10).

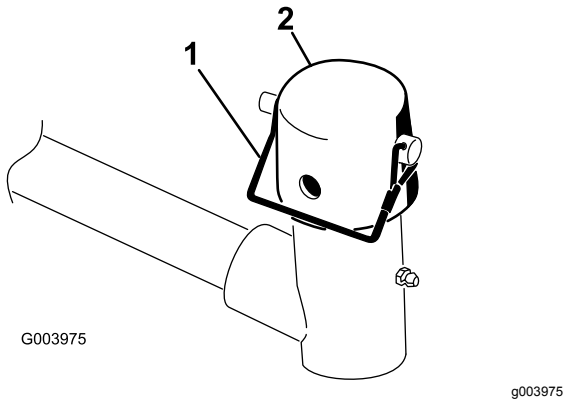

Figure 10

1. Snapper pin
2. Cap

8. For the front cutting units, slide a cutting unit under the lift arm while inserting the carrier-frame shaft up into the lift-arm-pivot yoke (Figure 11).

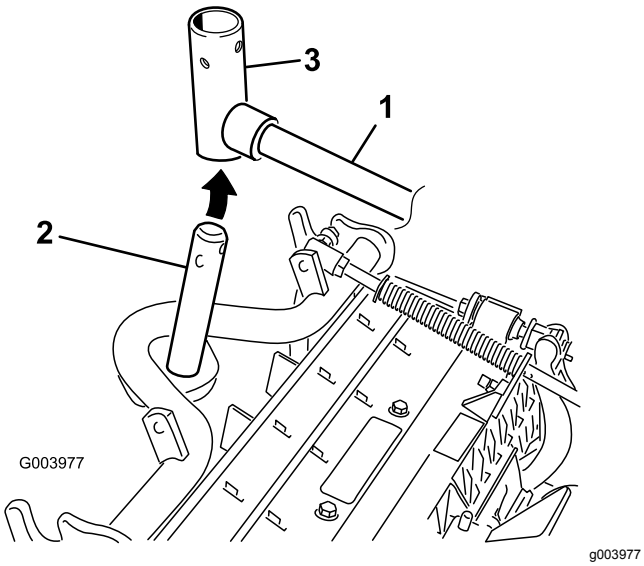

Figure 11

1. Lift arm
2. Carrier-frame shaft
3. Lift-arm-pivot yoke

9. Use the following procedure on the rear cutting units when the height of cut is above 19 mm (3/4 inch).
   A. Remove the lynch pin and washer securing the lift-arm-pivot shaft to the lift arm and slide the lift-arm-pivot shaft out of the lift arm (Figure 12).

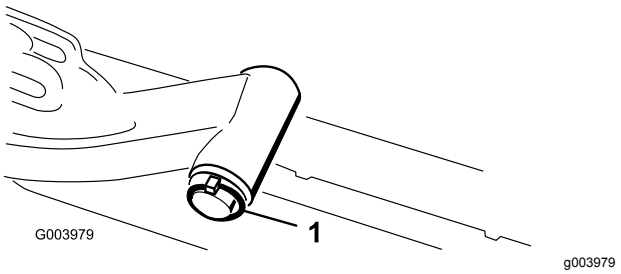

Figure 12

1. Lynch pin and washer

   B. Insert the lift-arm yoke onto the carrier-frame shaft (Figure 11).
   C. Insert the lift-arm shaft into the lift arm and secure it with the washer and lynch pin (Figure 12).
10. Insert the cap over the carrier-frame shaft and lift-arm yoke.
11. Secure the cap and the carrier-frame shaft to the lift-arm yoke with the snapper pin (Figure 10).

    Note: Use the slot if a steering cutting unit is desired or use the hole if the cutting unit is to be locked in position.
12. Secure the lift-arm chain to the chain bracket with the snapper pin (Figure 13).

    Note: Use the number of chain links described in the cutting unit *Operator's Manual*.

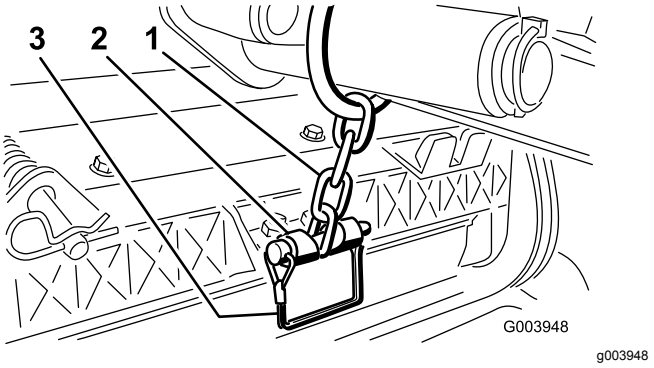

Figure 13

1. Lift-arm chain
2. Chain bracket
3. Snapper pin

13. On cutting unit 4 (left front) and cutting unit 5 (right front), insert the reel-motor hoses into the respective hose guide.
14. Coat the spline shaft of the reel motor with clean grease.
15. Oil the reel motor O-ring and install it onto the motor flange.

16. Install the motor by rotating it clockwise so that the motor flanges clear the bolts (Figure 14).

    Note: Rotate the motor counterclockwise until the flanges encircle the bolts then tighten the bolts.

    Important: **Make sure that the reel-motor hoses are not twisted, kinked or in the risk of being pinched.**

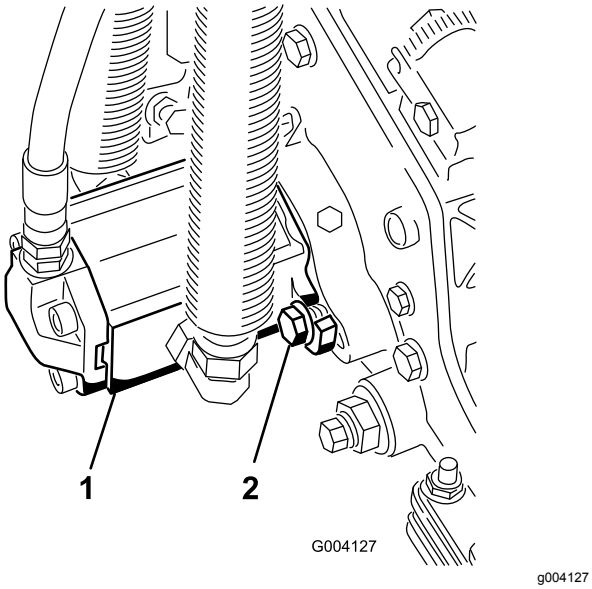

Figure 14

1. Reel-drive motor
2. Mounting bolts

4

Adjusting the Turf-Compensation Spring

No Parts Required

Procedure

The turf-compensation spring (Figure 15) transfers weight from the front to the rear roller. This helps to reduce a wave pattern in the turf, also known as marcelling or bobbing.

Important: **Make spring adjustments with the cutting unit mounted to the traction unit, pointing straight ahead and lowered to the ground.**

1. Make sure the hairpin cotter is installed in the rear hole in the spring rod (Figure 15).

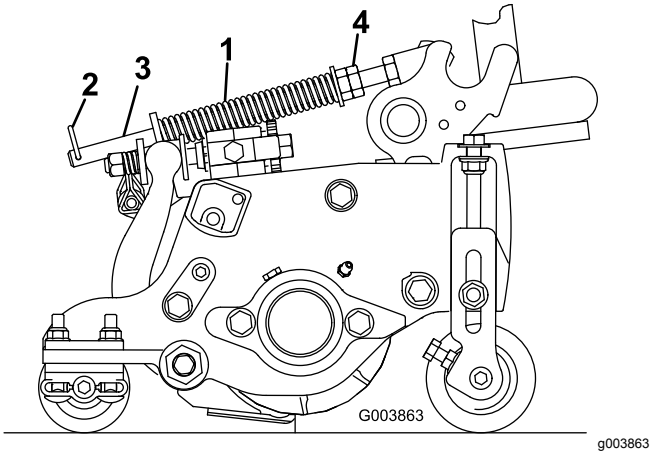

Figure 15

1. Turf-compensation spring
2. Hairpin cotter
3. Spring rod
4. Hex nuts

2. Tighten the hex nuts on the front end of the spring rod until the compressed length of the spring is 12.7 cm (5 inches) on Reelmaster 5410 (5-inch cutting units) or 15.9 cm (6.25 inches) on Reelmaster 5510 (7-inch cutting units); refer to Figure 15.

    Note: When operating on rough terrain, decrease the spring length by 12.7 mm (1/2 inch). This slightly decreases the ground following.

5

Installing the CE Hood Latch

Parts needed for this procedure:

1	Hood latch assembly
1	Washer

Procedure

1. Unlatch and raise the hood.
2. Remove the rubber grommet from the hole in the left side of the hood (Figure 16).

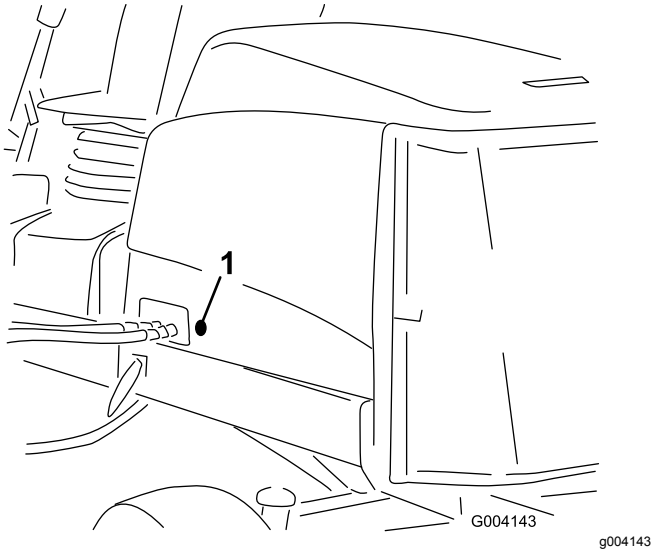

Figure 16

1. Rubber grommet

3. Remove the nut from the hood latch assembly (Figure 17).

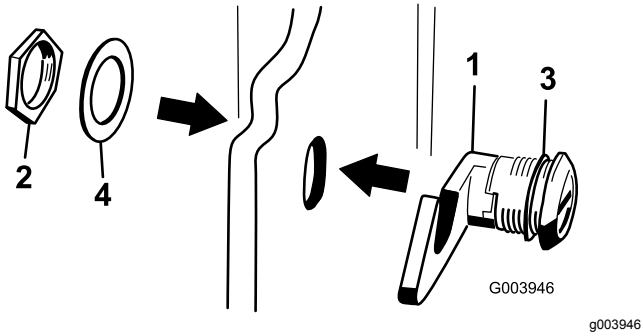

Figure 17

1. Hood latch
2. Nut
3. Rubber washer
4. Metal washer

4. Outside the hood, insert the hook end of the latch through the hole in the hood. Make sure that the rubber sealing washer remains to the outer side of the hood (Figure 17).
5. Inside the hood, insert the metal washer onto the latch and secure with the nut. Make sure that the latch engages the frame catch when it is locked. Use the enclosed hood latch key to operate the hood latch.

6

Using the Cutting-Unit Kickstand

Parts needed for this procedure:

1	Cutting-unit kickstand

Procedure

Whenever the cutting unit has to be tipped to expose the bedknife/reel, prop up the rear of the cutting unit with the kickstand to make sure that the nuts on the back end of the bedbar-adjusting screws are not resting on the work surface (Figure 18).

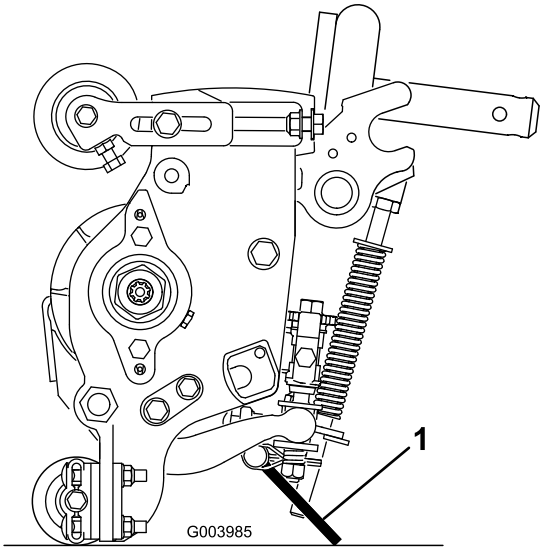

Figure 18

1. Cutting-unit kickstand

Secure the kickstand to the chain bracket with the snapper pin (Figure 19).

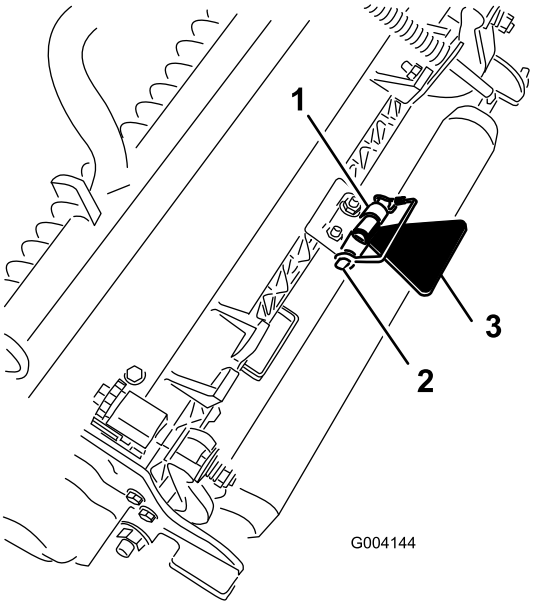

Figure 19

1. Chain bracket
2. Snapper pin
3. Cutting-unit kickstand

Product Overview

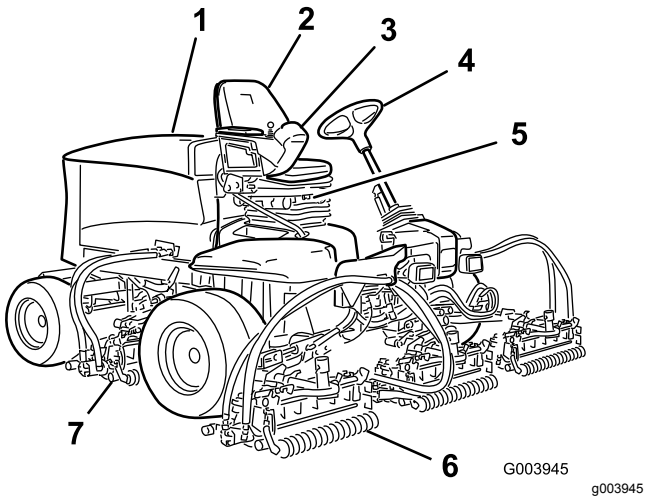

Figure 20

1. Engine hood
2. Operator's seat
3. Control arm
4. Steering wheel
5. Seat adjustments
6. Front cutting units
7. Rear cutting units

Controls

Seat-Adjusting Knobs

The seat-adjusting lever (Figure 21) allows you to adjust the seat fore and aft. The weight-adjusting knob adjusts the seat for the operator's weight. The weight gauge indicates when the seat is adjusted to the weight of the operator. The height-adjusting knob adjusts the seat for the operator's height.

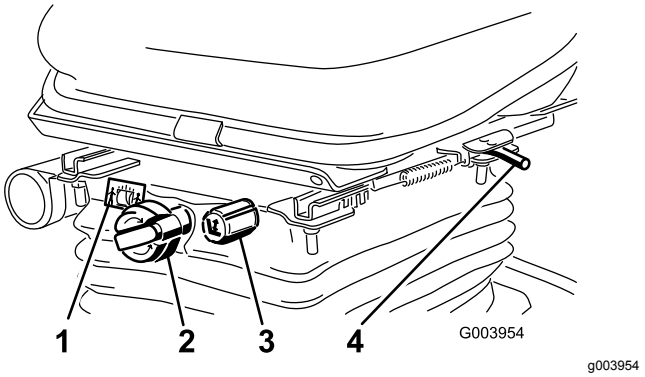

Figure 21

1. Weight gauge
2. Weight-adjusting knob
3. Height-adjusting knob
4. Adjusting lever (fore and aft)

Traction Pedal

The traction pedal (Figure 22) controls the forward and reverse operation. Press the top of the pedal to move the machine forward and the bottom to move the machine backward. Ground speed depends on how far you press the pedal. For no load, maximum ground speed, fully press the pedal while the throttle is in the FAST position.

To stop the machine, reduce foot pressure on the traction pedal and allow it to return to the center position.

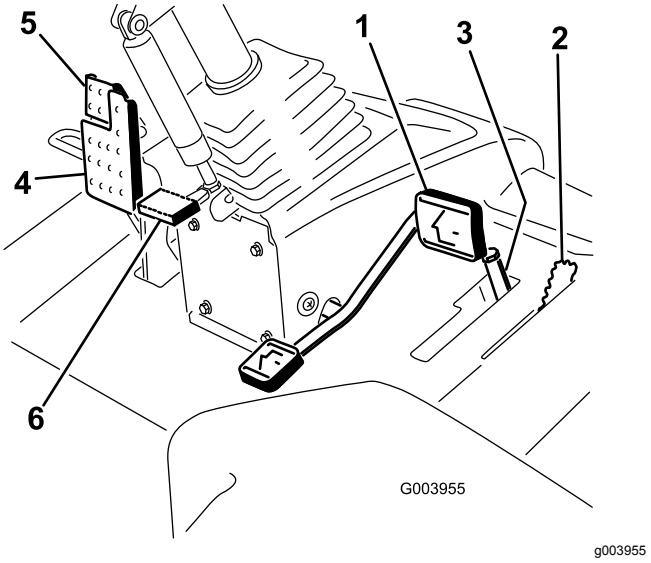

Figure 22

1. Traction pedal
2. Mow/transport lever
3. Mow-speed limiter and spacers
4. Brake pedal
5. Parking brake
6. Tilt steering pedal

Mow/Transport Lever

Use the mow/transport lever (Figure 22) to put the machine into MOW mode or TRANSPORT mode. Push the lever forward to select the MOW mode, and backward to select the TRANSPORT mode.

Note: The cutting units cannot be lowered when the mow/transport lever is in the TRANSPORT position.

Mow-Speed Limiter

When the mow-speed limiter (Figure 22) is flipped up/forward it limits the mow speed and allow the cutting units to be engaged. Each spacer adjusts the mowing speed by 0.8 km/h (0.5 mph). The more spacers there are on the top of the bolt, the slower the machine goes. Flip the mow speed limiter backward to allow maximum transport speed.

Brake Pedal

Press the brake pedal (Figure 22) to stop the machine.

Parking Brake

To engage the parking brake, (Figure 22) push down on the brake pedal and press the top forward to latch it. To release the parking brake, press the brake pedal until the parking-brake latch retracts.

Tilt-Steering Pedal

To tilt the steering wheel towards you, press the foot pedal (Figure 22) down, pull the steering tower toward you to the most comfortable position, and release the pedal.

Throttle Control

Move the throttle control (Figure 23) forward to increase the engine speed and rearward to decrease speed.

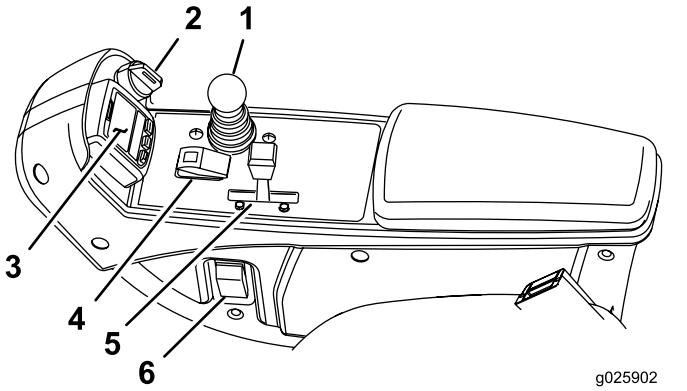

Figure 23

1. Lower mow/raise control lever
2. Key switch
3. InfoCenter
4. Enable/disable switch
5. Throttle control
6. Headlight switch

Key Switch

The key switch (Figure 23) has 3 positions: OFF, ON/PREHEAT, and START.

Lower Mow/Raise Control Lever

This lever (Figure 23) raises and lowers the cutting units and also starts and stops the cutting units when the cutting units are enabled in the MOW mode. You cannot lower the cutting units when the mow/transport lever is in the TRANSPORT position.

Headlight Switch

Pivot the switch downward to turn on the headlights (Figure 23).

Enable/Disable Switch

Use the enable/disable switch (Figure 23) in conjunction with the lower mow/raise control lever to operate the cutting units.

Backlap Levers

Use the backlap levers in conjunction with the lower mow/raise control lever for backlapping the reels (Figure 24).

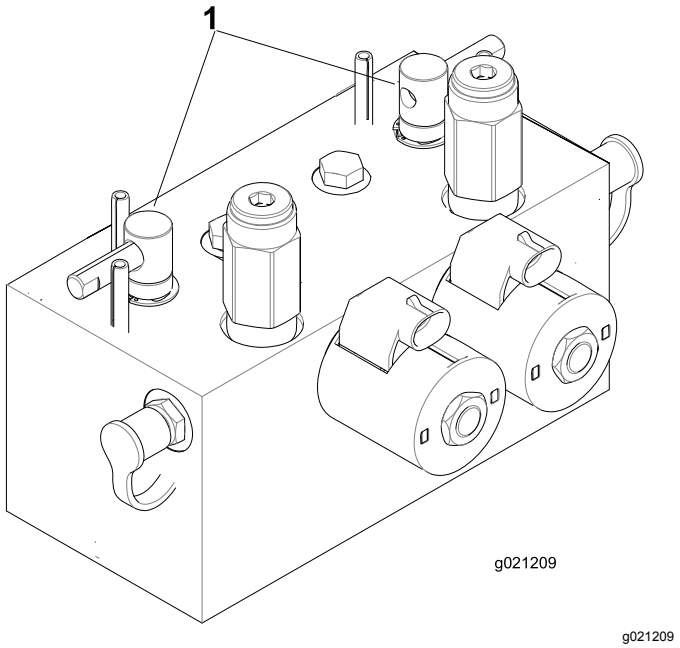

Figure 24

1. Backlap levers

Hydraulic-Filter Restriction Indicator

With the engine running at normal operating temperature, ensure that the indicator is in the green zone (Figure 25). When the indicator is in the red zone, change the hydraulic filters.

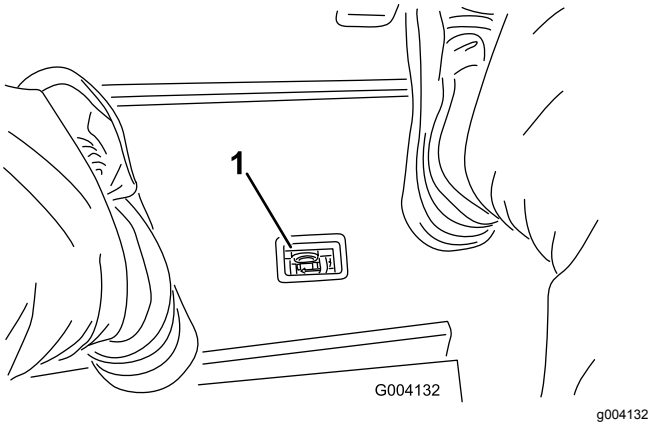

Figure 25

1. Hydraulic-filter-restriction indicator

Power Point

The power point is a 12 V power supply for electronic devices (Figure 26).

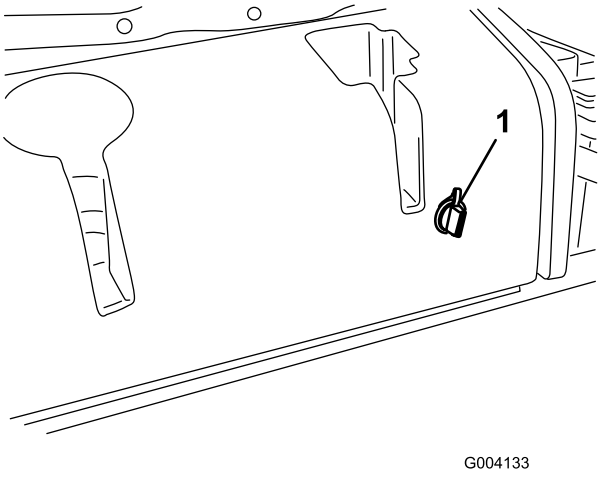

Figure 26

1. Power point

Using the InfoCenter LCD Display

The InfoCenter LCD display shows information about your machine such as the operating status, various diagnostics and other information about the machine (Figure 27) There is a splash screen and main information screen of the InfoCenter. You can switch between the splash screen and main information screen, at any time, by pressing any of the InfoCenter buttons and then selecting the appropriate directional arrow.

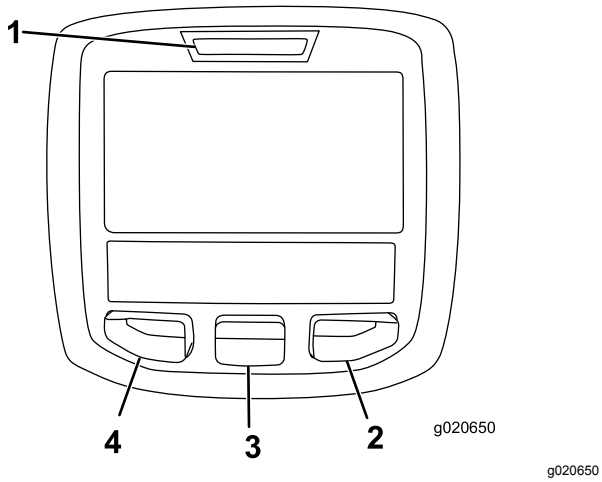

Figure 27

1. Indicator light
2. Right button
3. Middle button
4. Left button

- Left Button, Menu Access/Back Button— Press this button to access the InfoCenter menus. You can use it to back out of any menu you are currently using.
- Middle Button— Press this button to scroll down menus.
- Right Button— Press this button to open a menu where a right arrow indicates additional content.

Note: The purpose of each button may change depending on what is required at the time. Each button is labeled with an icon displaying its current function.

InfoCenter Icon Description

SERVICE DUE	Indicates when scheduled service should be performed
	Hour meter
	Info icon
	Fast
	Slow
	Fuel level
	The glow plugs are active.
	Raise the cutting units.

InfoCenter Icon Description (cont'd.)

	Lower the cutting units.
	Sit in the seat.
	The parking brake is On.
H	The range is high (transport).
N	Neutral
L	The range is low (mow).
	Engine-coolant temperature (°C or °F)
	Temperature (hot)
	The PTO is engaged.
	Not allowed
	Start the engine.
STOP	Stop the engine.
	Engine
	Key switch
	The cutting units are lowering.
	The cutting units are raising.
PIN	PIN passcode
CAN	CAN bus
	InfoCenter
Bad	Bad or failed
	Bulb
OUT	Output of TEC controller or control wire in harness
	Switch

InfoCenter Icon Description (cont'd.)

	Release the switch.
	Change to the indicated state.
Symbols are often combined to form sentences. Some examples are shown below	
	Put the machine into Neutral.
	Engine start is denied.
	Engine shutdown
	Engine coolant is too hot.
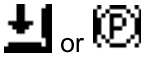	Sit down or set the parking brake

Using the Menus

To access the InfoCenter menu system, press the menu access button while at the main screen. This brings you to the main menu. Refer to the following tables for a synopsis of the options available from the menus:

Main Menu	
Menu Item	**Description**
Faults	The Faults menu contains a list of the recent machine faults. Refer to the *Service Manual* or contact your Toro Distributor for more information on the Faults menu and the information contained there.
Service	The Service menu contains information on the machine such as hours of use, counters, and other similar numbers.
Diagnostics	The Diagnostics menu displays the state of each machine switch, sensor, and control output. You can use this to troubleshoot certain issues as it quickly tells you which machine controls are on and which are off.
Settings	The Settings menu allows you to customize and modify configuration variables on the InfoCenter display.
About	The About menu lists the model number, serial number, and software version of your machine.

Service	
Menu Item	**Description**
Hours	Lists the total number of hours that the machine, engine and PTO have been on, as well as the number of hours the machine has been transported and service due.
Counts	Lists numerous counts the machine has experienced.

Diagnostics	
Menu Item	**Description**
Cutting Units	Indicates the inputs, qualifiers, and outputs for raising and lowering the cutting units.
Hi/Low Range	Indicates the inputs, qualifiers, and outputs for driving in transport mode.
PTO	Indicates the inputs, qualifiers, and outputs for enabling the PTO circuit.
Engine Run	Indicates the inputs, qualifiers, and outputs for starting the engine.
Backlap	Indicates the inputs, qualifiers and outputs for operating the backlap function.

Settings	
Menu Item	**Description**
Units	Controls the units used on the InfoCenter. The menu choices are English or Metric.
Language	Controls the language used on the InfoCenter*.
LCD Backlight	Controls the brightness of the LCD display.
LCD Contrast	Controls the contrast of the LCD display.
Front Backlap Reel Speed	Controls the speed of the front reels in backlap mode.
Rear Backlap Reel Speed	Controls the speed of the rear reels in backlap mode.
Protected Menus	Allows the superintendant/mechanic to access protected menus by inputting a passcode.
Blade Count	Controls the number of blades on the reel for reel speed.
Mow Speed	Controls the ground speed for determining the reel speed.
Height of cut (HOC)	Controls the height of cut (HOC) for determining the reel speed.
F Reel RPM	Displays the calculated reel speed position for the front reels. The reels can also be manually adjusted.
R Reel RPM	Displays the calculated reel speed position for the rear reels. The reels can also be manually adjusted.

* Only "operator-faced" text is translated. Faults, Service, and Diagnostics screens are "service-faced". Titles are in the selected language, but menu items are in English.

About	
Menu Item	**Description**
Model	Lists the model number of the machine.
SN	Lists the serial number of the machine.
Machine Controller Revision	Lists the software revision of the master controller.

InfoCenter Revision	Lists the software revision of the InfoCenter.
CAN Bus	Lists the machine communication bus status.

Protected Menu

There are 5 operating configuration settings that are adjustable within the Settings Menu of the InfoCenter: Blade Count, Mow Speed, Height of Cut (HOC), F Reel RPM, and R Reel RPM. These settings can be locked by using the Protected Menu.

Note: At the time of delivery, the initial password code is programmed by your distributor.

Accessing the Protected Menu Settings

1. From the Main Menu, scroll down to the Settings Menu and press the right button.
2. In the Settings Menu, scroll down to the Protected Menu and press the right button.
3. To enter the passcode, use the center button to set the first digit then press the right button to move on to the next digit.
4. Use the center button to set the second digit then press the right button to move on to the next digit.
5. Use the center button to set the third digit then press the right button to move on to the next digit.
6. Use the center button to set the fourth digit then press the right button.
7. Press the middle button to enter the code.
8. If the code has been accepted and the protected menu has been unlocked, “PIN” will be displayed in the upper right corner of the display screen.

   Note: If the passcode has been forgotten or misplaced, please contact your distributor for assistance.

Viewing and Changing the Protected Menu Settings

1. In the Protected Menu, scroll down to Protect Settings.
2. To view and change the settings without entering a passcode, use the right button to change the Protect Settings to OFF.
3. To view and change the settings with a passcode, use the left button to change the Protect Settings to ON, set the passcode, and turn the key in the ignition switch to the OFF position and then to the ON position.

Setting the Blade Count

1. In the Settings Menu, scroll down to Blade Count
2. Press the right button to change the blade count between 5, 8, or 11 blade reels.

Setting the Mow Speed

1. In the Settings Menu, scroll down to Mow Speed.
2. Press the right button to select mow speed.
3. Use the center and right button to select the appropriate mow speed set on the mechanical mow-speed limiter on the traction pedal.
4. Press the left button to exit mow speed and save the setting.

Setting the Height of Cut (HOC)

1. In the Settings Menu, scroll down to HOC.
2. Press the right button to select HOC.
3. Use the center and right button to select the appropriate HOC setting. (If the exact setting is not displayed, select the nearest HOC setting from the list displayed).
4. Press the left button to exit HOC and save the setting.

Setting the Front and Rear Reel Speeds

Although the front and rear reel speeds are calculated by inputting the number of blades, mow speed and HOC into the InfoCenter, the setting can be manually changed to accommodate for different mowing conditions.

1. To change the Reel Speed Settings, scroll down to the F Reel RPM, R Reel RPM, or both.
2. Press the right button to change the reel speed value. As you change the speed setting, the display continues to show the calculated reel speed based on blade count, mow speed and HOC, which was previously entered, but the new value is also displayed.

Specifications

Note: Specifications and design are subject to change without notice.

Specification	ReelMaster® 5410	ReelMaster® 5510
Transport Width	228 cm (90 inches)	233 cm (92 inches)
Width of cut	254 cm (100 inches)	254 cm (100 inches)
Length	282 cm (111 inches)	282 cm (111 inches)
Height	160 cm (63 inches)	160 cm (63 inches)
Weight	1,136 kg (2,505 lb)	1,222 kg (2,693 lb)
Engine	Kubota 35.5 hp	Kubota 35.5 hp
Fuel tank capacity	53 L (14 US gallons)	53 L (14 US gallons)
Transport speed	0–16 km/h (0–10 mph)	0–16 km/h (0–10 mph)
Mowing speed	0–13 km/h (0–8 mph)	0–13 km/h (0–8 mph)

Attachments/Accessories

A selection of Toro approved attachments and accessories is available for use with the machine to enhance and expand its capabilities. Contact your Authorized Service Dealer or Distributor or go to www.Toro.com for a list of all approved attachments and accessories.

To best protect your investment and maintain optimal performance of your Toro equipment, count on Toro genuine parts. When it comes to reliability, Toro delivers replacement parts designed to the exact engineering specification of our equipment. For peace of mind, insist on Toro genuine parts.

Operation

Note: Determine the left and right sides of the machine from the normal operating position.

Before Operation

Before Operation Safety

General Safety

- Never allow children or untrained people to operate or service the machine. Local regulations may restrict the age of the operator. The owner is responsible for training all operators and mechanics.
- Become familiar with the safe operation of the equipment, operator controls, and safety signs.
- Always shut off the engine, remove the key, wait for all moving parts to stop, and allow the machine to cool before adjusting, servicing, cleaning, or storing the machine.
- Know how to stop the machine and shut off the engine quickly.
- Do not operate the machine without all guards and other safety protective devices in place and functioning properly on the machine.
- Before mowing, always inspect the machine to ensure that the cutting units are in good working condition.
- Inspect the area where you will use the machine and remove all objects that the machine could throw.

Fuel Safety

- Use extreme care in handling fuel. It is flammable and its vapors are explosive.
- Extinguish all cigarettes, cigars, pipes, and other sources of ignition.
- Use only an approved fuel container.
- Do not remove the fuel cap or fill the fuel tank while the engine is running or hot.
- Do not add or drain fuel in an enclosed space.
- Do not store the machine or fuel container where there is an open flame, spark, or pilot light, such as on a water heater or other appliance.
- If you spill fuel, do not attempt to start the engine; avoid creating any source of ignition until the fuel vapors have dissipated.

Performing Daily Maintenance

Service Interval: Before each use or daily

Before starting the machine each day, perform the Each Use/Daily procedures listed in Maintenance (page 33).

Filling the Fuel Tank

Fuel Tank Capacity

53 L (14 US gallons)

Fuel Specification

Important: **Use only ultra-low sulphur diesel fuel. Fuel with higher rates of sulfur degrades the diesel oxidation catalyst (DOC), which causes operational problems and shortens the service life of engine components.**

Failure to observe the following cautions may damage the engine.

- Never use kerosene or gasoline instead of diesel fuel.
- Never mix kerosene or used engine oil with the diesel fuel.
- Never keep fuel in containers with zinc plating on the inside.
- Do not use fuel additives.

Petroleum Diesel

Cetane rating: 45 or higher

Sulfur content: Ultra-low sulfur (<15 ppm)

Fuel Table

Diesel fuel specification	Location
ASTM D975 No. 1-D S15 No. 2-D S15	USA
EN 590	European Union
ISO 8217 DMX	International
JIS K2204 Grade No. 2	Japan
KSM-2610	Korea

- Use only clean, fresh diesel fuel or biodiesel fuels.
- Purchase fuel in quantities that can be used within 180 days to ensure fuel freshness.

Use summer-grade diesel fuel (No. 2-D) at temperatures above -7°C (20°F) and winter-grade fuel (No. 1-D or No. 1-D/2-D blend) below that temperature.

Note: Use of winter-grade fuel at lower temperatures provides lower flash point and cold flow characteristics which eases starting and reduces fuel filter plugging.

Using summer-grade fuel above -7°C (20°F) contributes toward longer fuel pump life and increased power compared to winter-grade fuel.

Biodiesel

This machine can also use a biodiesel blended fuel of up to B20 (20% biodiesel, 80% petroleum diesel).

Sulfur content: Ultra-low sulfur (<15 ppm)

Biodiesel fuel specification: ASTM D6751 or EN14214

Blended fuel specification: ASTM D975, EN590, or JIS K2204

Important: **The petroleum diesel portion must be ultra-low sulfur.**

Observe the following precautions:

- Biodiesel blends may damage painted surfaces.
- Use B5 (biodiesel content of 5%) or lesser blends in cold weather.
- Monitor seals, hoses, gaskets in contact with fuel as they may be degraded over time.
- Fuel filter plugging may be expected for a time after converting to biodiesel blends.
- Contact your Authorized Toro Distributor if you wish for more information on biodiesel.

Adding Fuel

1. Park the machine on a level surface, lower the cutting units, shut off the engine, and remove the key.
2. Using a clean rag, clean area around fuel-tank cap.
3. Remove the cap from the fuel tank (Figure 28).

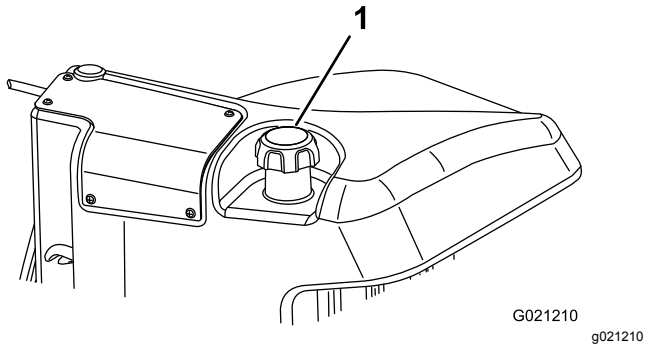

Figure 28

1. Fuel-tank cap

4. Fill the tank until the level is 6 to 13 mm (1/4 to 1/2 inch) below the bottom of the filler neck.
5. Install the fuel-tank cap tightly after filling the tank.

   Note: If possible, fill the fuel tank after each use. This minimizes possible buildup of condensation inside the fuel tank.

During Operation

During Operation Safety

General Safety

- The owner/operator can prevent and is responsible for accidents that may cause personal injury or property damage.
- Wear appropriate clothing, including eye protection; long pants; substantial, slip-resistant footwear; and hearing protection. Tie back long hair and do not wear loose clothing or loose jewelry.
- Do not operate the machine while ill, tired, or under the influence of alcohol or drugs.
- Use your full attention while operating the machine. Do not engage in any activity that causes distractions; otherwise, injury or property damage may occur.
- Before you start the engine, ensure that all drives are in neutral, the parking brake is engaged, and you are in the operating position.

- Do not carry passengers on the machine and keep bystanders and pets away from the machine during operation.
- Operate the machine only in good visibility to avoid holes or hidden hazards.
- Avoid mowing on wet grass. Reduced traction could cause the machine to slide.
- Keep your hands and feet away from the cutting units.
- Look behind and down before backing up to be sure of a clear path.
- Use care when approaching blind corners, shrubs, trees, or other objects that may obscure your vision.
- Stop the cutting units whenever you are not mowing.
- Slow down and use caution when making turns and crossing roads and sidewalks with the machine. Always yield the right-of-way.
- Never run an engine in an area where exhaust gasses are enclosed.
- Never leave a running machine unattended.
- Before leaving the operating position (including to empty the catchers or to unclog the cutting units), do the following::
  - Park the machine on level ground.
  - Disengage the cutting units and lower the attachments.
  - Engage the parking brake.
  - Shut off the engine and remove the key.
  - Wait for all moving parts to stop.

Rollover Protection System (ROPS) Safety

- Do not remove any of the ROPS components from the machine.
- Ensure that the seat belt is attached and that you can release it quickly in an emergency.
- Always wear your seat belt.
- Check carefully for overhead obstructions and do not contact them.
- Keep the ROPS in safe operating condition by thoroughly inspecting it periodically for damage and keeping all the mounting fasteners tight.
- Replace all damaged ROPS components. Do not repair or alter them.

Slope Safety

- Slopes are a major factor related to loss of control and rollover accidents, which can result in severe injury or death. You are responsible for safe slope operation. Operating the machine on any slope requires extra caution.
- Evaluate the site conditions to determine if the slope is safe for machine operation, including surveying the site. Always use common sense and good judgment when performing this survey.
- Review the slope instructions, listed below, for operating the machine on slopes. Before you operate the machine, review the site conditions to determine whether you can operate the machine in the conditions on that day and at that site. Changes in the terrain can result in a change in slope operation for the machine.
  - Avoid starting, stopping, or turning the machine on slopes. Avoid making sudden changes in speed or direction. Make turns slowly and gradually.
  - Do not operate a machine under any conditions where traction, steering, or stability is in question.
  - Remove or mark obstructions such as ditches, holes, ruts, bumps, rocks, or other hidden hazards. Tall grass can hide obstructions. Uneven terrain could overturn the machine.
  - Be aware that operating the machine on wet grass, across slopes, or downhill may cause the machine to lose traction.
  - Use extreme caution when operating the machine near drop-offs, ditches, embankments, water hazards, or other hazards. The machine could suddenly roll over if a wheel goes over the edge or the edge caves in. Establish a safety area between the machine and any hazard.
  - Identify hazards at the base of the slope. If there are hazards, mow the slope with a pedestrian-controlled machine.
  - If possible, keep the cutting units lowered to the ground while operating on slopes. Raising the cutting units while operating on slopes can cause the machine to become unstable.

Starting and Stopping the Engine

Important: **You must bleed the fuel system before starting the engine if you are starting the engine for the first time, the engine has stopped due to lack of fuel, or you have performed maintenance on the fuel system; refer to Bleeding the Fuel System (page 41).**

Starting the Engine

1. Sit on the seat, keep your foot off the traction pedal so that it is in NEUTRAL, engage the parking brake, set the throttle to the FAST position, and ensure that the Enable/Disable switch is in the DISABLE position.
2. Turn the ignition switch to the ON/PREHEAT position.

   An automatic timer controls the glow plug preheat for 6 seconds.
3. After preheating the glow plugs, turn key to the START position.

   Crank the engine for no longer than 15 seconds. Release the key when the engine starts. If additional preheating is required, turn key to the OFF position and then to the ON/PREHEAT position. Repeat this process as required.
4. Run the engine at low idle speed until it warms up.

Stopping the Engine

1. Move all controls to NEUTRAL, set the parking brake, move the throttle to the low idle position and allow the engine to reach low idle speed.

   Important: **Allow the engine to idle for 5 minutes before shutting it off after a full load operation. Failure to do so may lead to trouble on a turbo-charged engine.**
2. Turn the key to the OFF position and remove it from the switch.

Adjusting the Lift-Arm Counterbalance

You can adjust the counterbalance on the rear cutting-unit lift arms to compensate for different turf conditions and to maintain a uniform height of cut in the rough conditions or in areas of thatch buildup.

You can adjust each counterbalance spring to 1 of 4 settings. Each increment increases or decreases counterbalance on the cutting unit by 2.3 kg (5 lb). You can position the springs on the back side of the first spring actuator to remove all counter balance (fourth position).

1. Position the machine on a level surface, lower the cutting units, stop the engine, engage the parking brakes, and remove the key from the ignition switch.
2. Insert a tube or similar object onto the long spring end and pivot it around the spring actuator to the desired position (Figure 29).

⚠ CAUTION

The springs are under tension and could cause personal injury.

Use caution when adjusting them.

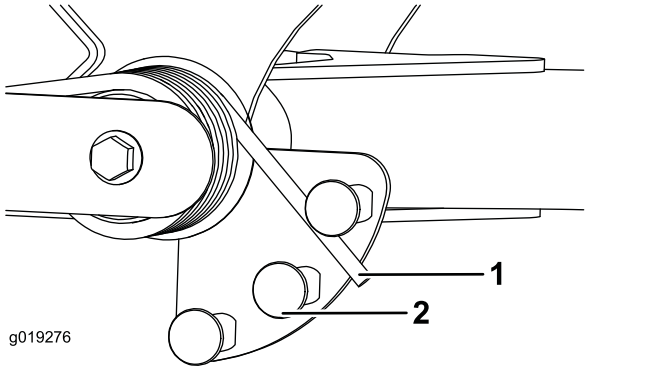

Figure 29

1. Spring
2. Spring actuator

3. Repeat the procedure on the other spring.

Adjusting the Lift-Arm Turnaround Position

1. Position the machine on a level surface, lower the cutting units, stop the engine, engage the parking brakes, and remove the key from the ignition switch.
2. The lift-arm switch is located underneath the hydraulic tank behind the front, right lift arm (Figure 30).
3. Loosen the switch-mounting screws (Figure 30) and move the switch down to increase the lift-arm turnaround height or move the switch up to decrease the lift-arm turnaround height.

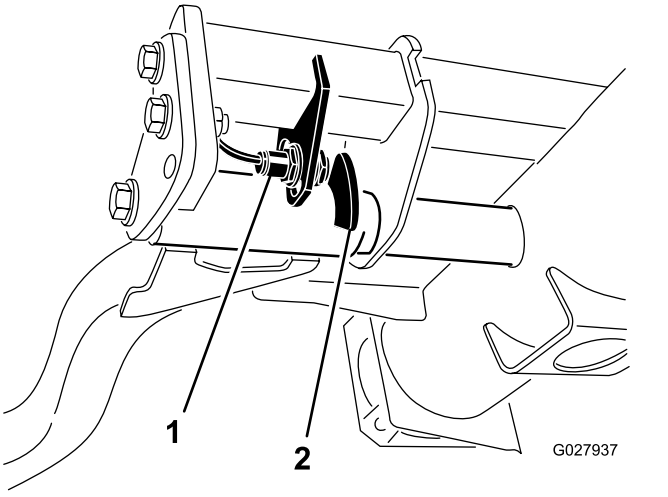

g027937

Figure 30

1. Switch
2. Lift-arm sensing device

4. Tighten the mounting screws.

Setting the Reel Speed

To achieve a consistent, high quality of cut and a uniform after cut appearance, it is important that you set the reel speed to the proper setting. Adjust the reel speed as follows:

1. In the InfoCenter, under the settings menu, enter the blade count, mow speed and HOC to calculate the proper reel speed.
2. If further adjustments are required, in the settings menu, scroll down to the F Reel RPM, R Reel RPM, or both.
3. Press the right button to change the reel speed value. As the speed setting is changed, the display will continue to show the calculated reel speed based on blade count, mow speed and HOC, but the new value will also be displayed.

   Note: The reel speed may need to be increased or decreased to compensate for varying turf conditions.

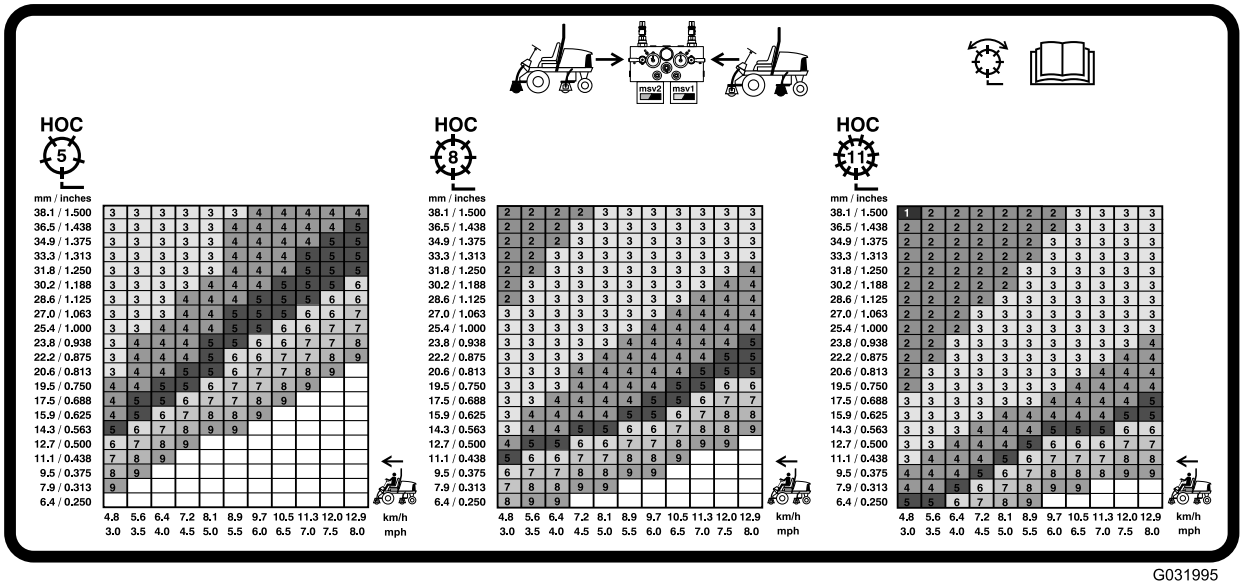

G031995

g031995

Figure 31

5 inch (127 mm) Reel Speed Chart

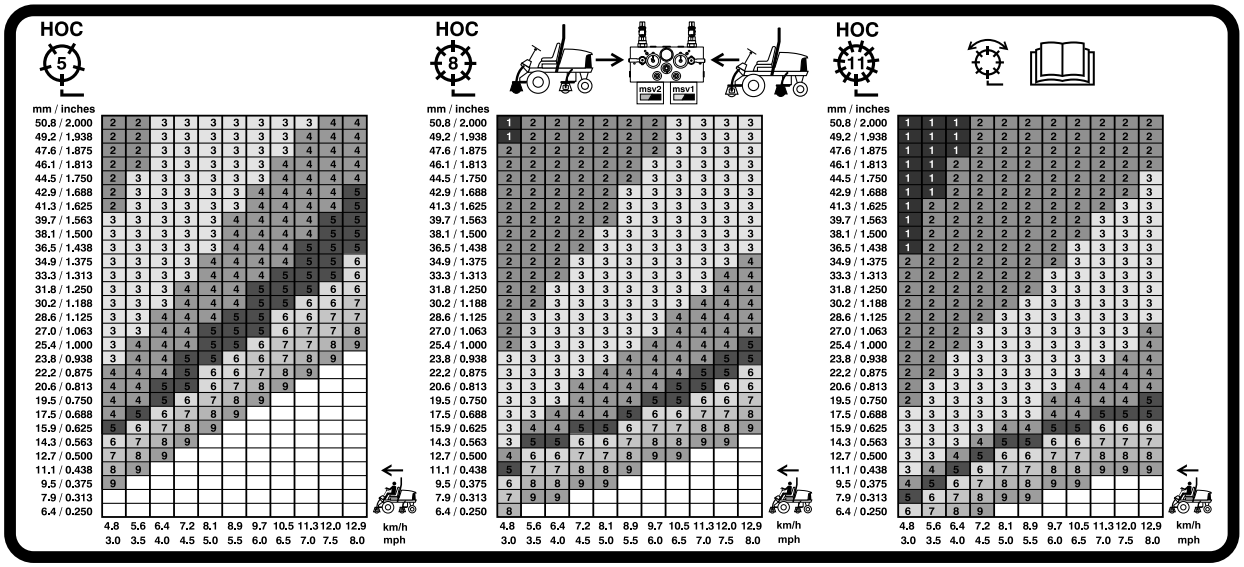

g031996

Figure 32

7 inch (177.8 mm) Reel Speed Chart

Understanding the Diagnostic Light

The machine is equipped with a diagnostic light which indicates if the electronic controller senses an electronic malfunction. The diagnostic light is located on the InfoCenter, above the display screen (Figure 33). When the machine is functioning properly and the key switch is moved to the ON/RUN position, the diagnostic light turns on briefly to indicate the light is working properly. When a machine advisory message is displayed, the light illuminates when the message is present. When a fault message is displayed, the light blinks until the fault is resolved.

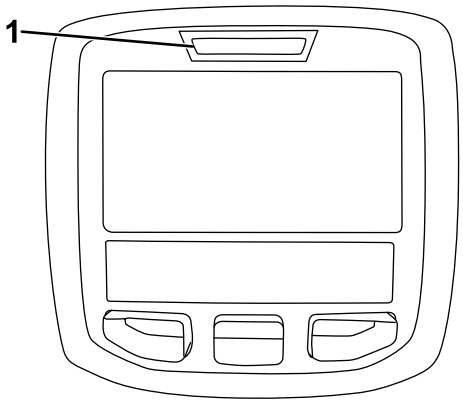

g021272

Figure 33

1. Diagnostic light

Checking the Interlock Switches

The purpose of the interlock switches is to prevent the engine from cranking or starting unless the traction pedal is in the NEUTRAL position, the Enable/Disable switch is in the DISABLE position, and the Lower Mow/Raise control is in the NEUTRAL position. In addition, the engine should stop when the traction pedal is pressed with operator off the seat or if the parking brake is left engaged.

⚠ CAUTION

If safety interlock switches are disconnected or damaged the machine could operate unexpectedly causing personal injury.

- **Do not tamper with the interlock switches.**
- **Check the operation of the interlock switches daily and replace any damaged switches before operating the machine.**

Verifying the Interlock-Switch Function

Service Interval: Before each use or daily—Check the operation of the interlock switches.

1. Park the machine on a level surface, lower the cutting units, stop the engine, and engage the parking brake.

2. Turn the key in the ignition switch to the ON position, but do not start the machine.
3. Locate the appropriate switch function in the diagnostics menu on the InfoCenter.
4. Individually, change each of the switches from open to closed (i.e., sit on seat, engage traction pedal, etc.), and note that the appropriate state of the switch changes. Repeat this for all switches that you can change by hand.

   Note: Repeat this for all switches that you can change by hand.
5. If a switch is closed and the appropriate indicator does not change, check all wiring and connections to the switch and/or check the switches with an ohm meter.

   Note: Replace any malfunctioning switches and repair any damaged or worn wiring.

Note: The InfoCenter display also has the ability to detect which output solenoids or relays are turned on. This is a quick way to determine if a machine malfunction is electrical or hydraulic.

Verifying the Output Function

1. Park the machine on a level surface, lower the cutting units, stop the engine, and engage the parking brake.
2. Turn the key switch to the ON position and start the machine.
3. Locate the appropriate output function in the diagnostics menu on the InfoCenter.
4. Sit on the seat and attempt to operate the desired function of the machine.

Note: The appropriate outputs should change state to indicate that the ECM is turning on that function.

If the correct outputs do not illuminate, verify that the required input switches are in the necessary positions to allow that function to occur. Verify the correct switch function.

If the output displays are on as specified, but the machine does not function properly, this indicates a non-electrical problem. Repair as necessary.

Hydraulic Valve Solenoid Functions

Use the list below to identify and understand the different functions of the solenoids in the hydraulic manifold. Each solenoid must be energized to allow the function to occur.

Solenoid	Function
MSV2	Front reel circuit
MSV1	Rear reel circuit
SVRV	Lift/lower cutting units
SV1	Lift/lower front cutting unit
SV3	Lift/lower rear cutting unit
SV2	Raise any cutting units

Operating Tips

Familiarization

Before mowing grass, practice operating the machine in an open area. Start and stop the engine. Operate in forward and reverse. Lower and raise the cutting units and engage and disengage the reels. When you feel familiar with the machine, practice operating up and down slopes at different speeds.

Warning System

If a warning light comes on during operation, stop the machine immediately and correct the problem before continuing operation. Serious damage could occur if you operate the machine with a malfunction.

Mowing

Start the engine and move the throttle to the FAST position. Move the Enable/Disable switch to the ENABLE position and use the Lower Mow/Raise lever to control the cutting units (the front cutting units are timed to lower before the rear cutting units). To move forward and cut grass, press the traction pedal forward.

Note: Allow the engine to idle for 5 minutes before shutting it off after a full load operation. Failure to do so may lead to turbo-charger trouble.

Transport

Move the Enable/Disable switch to the DISABLE position and raise the cutting units to the transport position. Move the Mow/Transport lever to the TRANSPORT position. Be careful when driving between objects so you do not accidentally damage the machine or cutting units. Use extra care when operating the machine on slopes. Drive slowly and avoid sharp turns on slopes to prevent rollovers. Lower the cutting units when going downhill for steering control.

After Operation

After Operation Safety

General Safety

- Always shut off the engine, remove the key (if equipped), wait for all moving parts to stop, and allow the machine to cool before adjusting, servicing, cleaning, or storing the machine.
- Clean grass and debris from the cutting units, drives, mufflers, cooling screens, and engine compartment to help prevent fires. Clean up oil or fuel spills.
- Shut off the fuel while storing or transporting the machine.
- Disengage the drive to the attachment whenever you are transporting or not using the machine.
- Allow the engine to cool before storing the machine in any enclosure.
- Maintain and clean the seat belt(s) as necessary.
- Do not store the machine or fuel container where there is an open flame, spark, or pilot light, such as on a water heater or on other appliances.

Pushing or Towing the Machine

In an emergency, the machine can be moved by opening the bypass valve in the variable displacement hydraulic pump and pushing or towing the machine.

Important: **Do not push or tow the machine faster than 3 to 4.8 km/h (2 to 3 mph) because internal transmission damage may occur. The bypass valve must be open whenever the machine is pushed or towed.**

1. Rotate the bypass-valve bolt 1-1/2 turns to open and allow oil to bypass internally (Figure 34).

   Note: The bypass valve is located on the left side of the hydrostat. By bypassing the fluid, you can move the machine slowly without damaging the transmission.

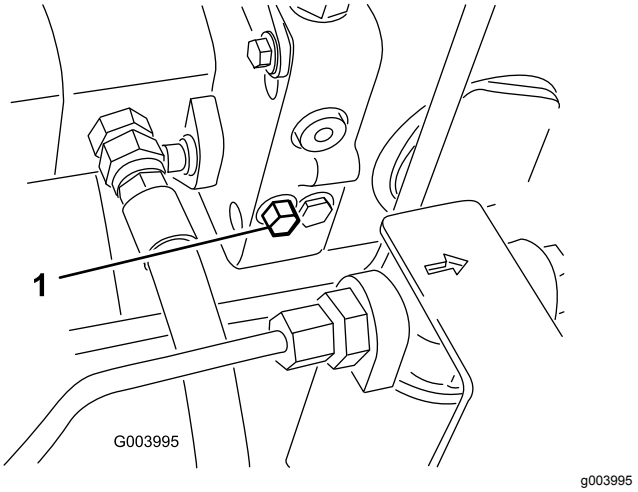

Figure 34

1. Bypass valve

2. Close the bypass valve before starting the engine. However, do not exceed 7 to 11 N-m. (5 to 8 ft-lb) torque to close the valve.

   Important: **Running the engine with the bypass valve open causes the transmission to overheat.**

Locating the Jacking Points

Note: Use jack stands to support the machine when required.

- Front—rectangular pad, under the axle tube, inside each front tire (Figure 35).

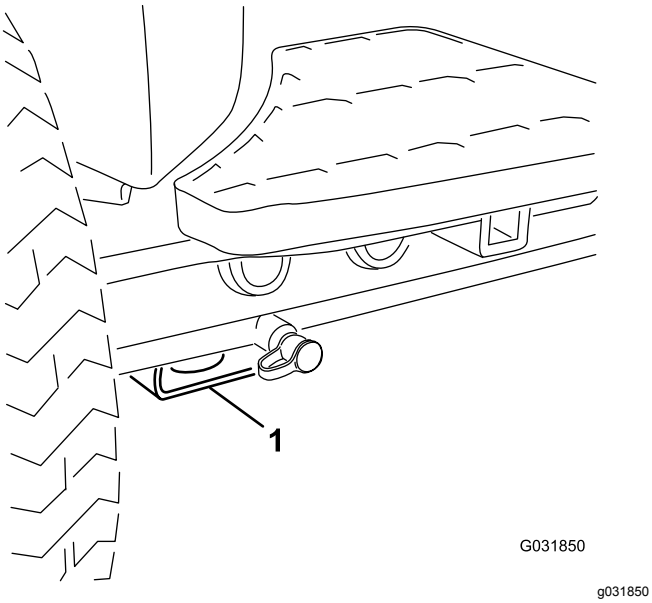

Figure 35

1. Front jacking point

- Rear—rectangular axle tube on the rear axle

Maintenance

Note: Determine the left and right sides of the machine from the normal operating position.

Maintenance Safety

- Before adjusting, cleaning, servicing, or leaving the machine, do the following:
  - Park the machine on a level surface.
  - Move the throttle switch to the low-idle position.
  - Disengage the cutting units.
  - Lower the cutting units.
  - Ensure that the traction is in neutral.
  - Engage the parking brake.
  - Shut off the engine and remove the key.
  - Wait for all moving parts to stop.
  - Allow machine components to cool before performing maintenance.
- If possible, do not perform maintenance while the engine is running. Keep away from moving parts.
- Use jack stands to support the machine or components when required.
- Carefully release pressure from components with stored energy.
- Keep all parts of the machine in good working condition and all hardware tightened.
- Replace all worn or damaged decals.
- To ensure safe, optimal performance of the machine, use only genuine Toro replacement parts. Replacement parts made by other manufacturers could be dangerous, and such use could void the product warranty.

Recommended Maintenance Schedule(s)

Maintenance Service Interval	Maintenance Procedure
After the first hour	• Torque the wheel lug nuts to 94 to 122 N-m (70 to 90 ft-lb).
After the first 8 hours	• Check the condition and tension of the alternator belt.
After the first 10 hours	• Torque the wheel lug nuts to 94 to 122 N-m (70 to 90 ft-lb).
After the first 50 hours	• Change the engine oil and filter. • Check the engine speed (idle and full throttle).
Before each use or daily	• Inspect the seat belt(s) for wear, cuts, and other damage. Replace the seat belt(s) if any component does not operate properly. • Check the operation of the interlock switches. • Check the engine-oil level. • Check the cooling system. • Remove debris from the screen, oil coolers, and radiator. (More frequently in dirty operating conditions). • Check the hydraulic-fluid level. • Check the hydraulic lines and hoses. • Check the reel-to-bedknife contact.
Every 50 hours	• Grease the bearings and bushings (and immediately after every washing). • Check the condition of and clean the battery. • Check the battery cable connections.
Every 100 hours	• Inspect the cooling system hoses. • Check the condition and tension of the alternator belt.
Every 150 hours	• Change the engine oil and filter.
Every 200 hours	• Drain moisture from the fuel tank and hydraulic-fluid tank. • Check the reel bearing preload.
Every 250 hours	• Torque the wheel lug nuts to 94 to 122 N-m (70 to 90 ft-lb).

Maintenance Service Interval	Maintenance Procedure
Every 400 hours	• Service the air cleaner. (Service the air cleaner earlier if the air cleaner indicator shows red. Service it more frequently in extremely dirty or dusty conditions.) • Check the fuel lines and connections for deterioration, damage, or loose connections. (Or yearly, whichever comes first). • Replace the fuel-filter canister. • Check the engine speed (idle and full throttle).
Every 800 hours	• Drain and clean the fuel tank. • Check the rear wheel toe-in. • Change the hydraulic fluid. • Change the hydraulic filters. (Or more often if the service-interval indicator is in the red zone). • Pack the rear wheel bearings. • Adjust the engine valves (refer to the engine operator's manual).
Before storage	• Drain and clean the fuel tank.
Every 2 years	• Flush and replace the cooling system fluid. • Drain and flush the hydraulic tank. • Replace all moving hoses.

Daily Maintenance Checklist

Duplicate this page for routine use.

Maintenance Check Item	For the week of: Mon.	Tues.	Wed.	Thurs.	Fri.	Sat.	Sun.
Check the safety interlock operation.							
Check the brake operation.							
Check the engine oil and fuel level.							
Drain the water/fuel separator.							
Check the air filter restriction indicator.							
Check the radiator and screen for debris.							
Check unusual engine noises.[1]							
Check unusual operating noises.							
Check the hydraulic system oil level.							
Check the hydraulic filter indicator. [2]							
Check hydraulic hoses for damage.							
Check for fluid leaks.							
Check the tire pressure.							
Check the instrument operation.							
Check the reel-to-bedknife adjustment.							
Check the height-of-cut adjustment.							
Check all grease fittings for lubrication.[3]							
Touch-up damaged paint.							

1. Check the glow plug and injector nozzles if hard starting, excess smoke, or rough running is noted.
2. Check with the engine running and the oil at operating temperature.
3. Immediately after every washing, regardless of the interval listed.

Notation for Areas of Concern

Inspection performed by:		
Item	**Date**	**Information**
1		
2		
3		
4		
5		
6		
7		
8		

Important: **Refer to your engine operator's manual for additional maintenance procedures.**

Note: Download a free copy of the electrical or hydraulic schematic by visiting www.Toro.com and searching for your machine from the Manuals link on the home page.

Lubrication

Greasing the Bearings and Bushings

Service Interval: Every 50 hours (and immediately after every washing).

Lubricate all grease fittings for the bearings and bushings after with No. 2 lithium grease.

The grease fitting locations and quantities are as follows:

- Pump-driveshaft U-joint (3) (Figure 36)

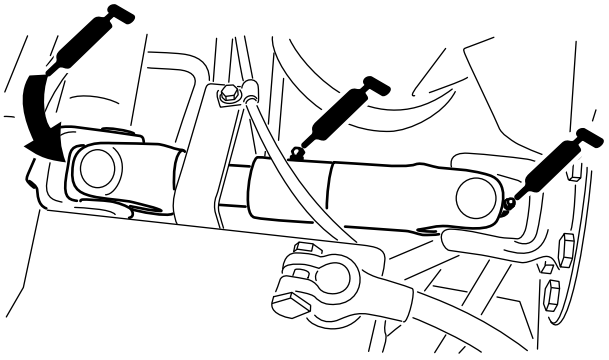

Figure 36

- Cutting-unit lift-arm cylinders (2 each) (Figure 37)

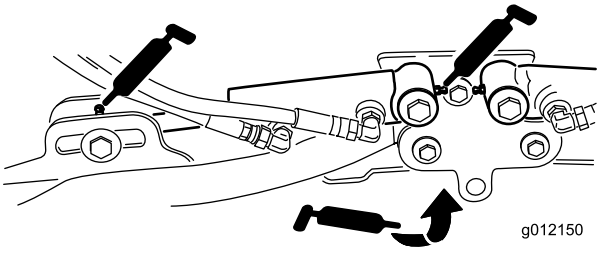

Figure 37

- Lift-arm pivots (1 each) (Figure 37)
- Cutting-unit carrier-frame and pivot (2 each) (Figure 38)

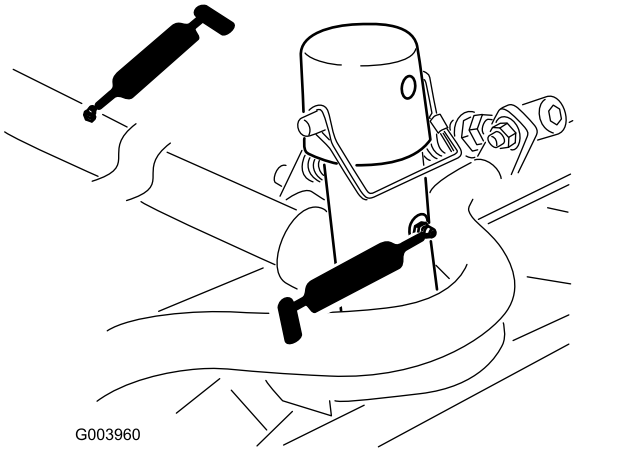

Figure 38

- Lift-arm pivot shaft (1 each) (Figure 39)

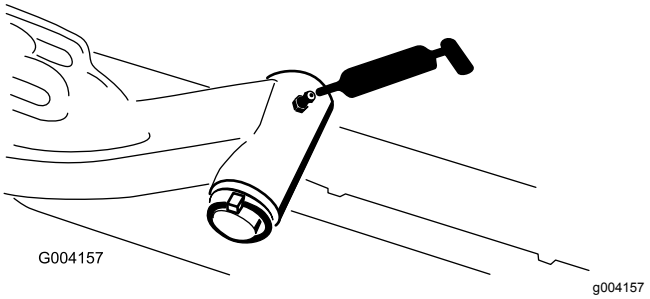

Figure 39

- Rear axle tie rod (2) (Figure 40)

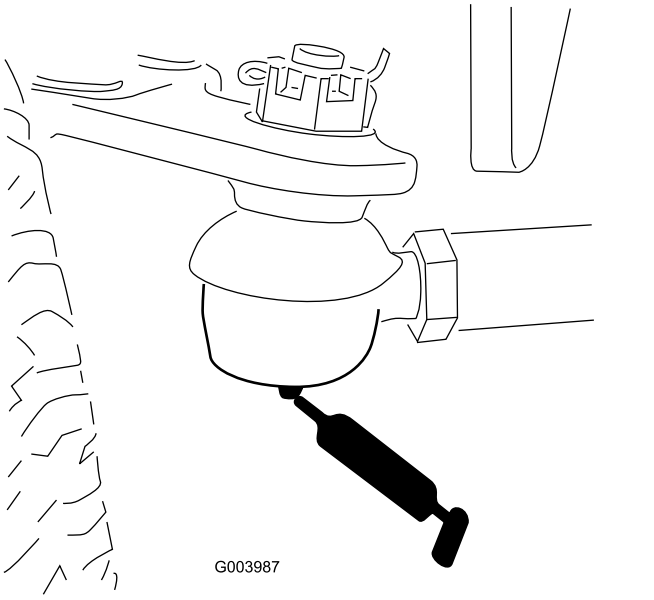

Figure 40

- Axle-steering pivot (1) (Figure 41)

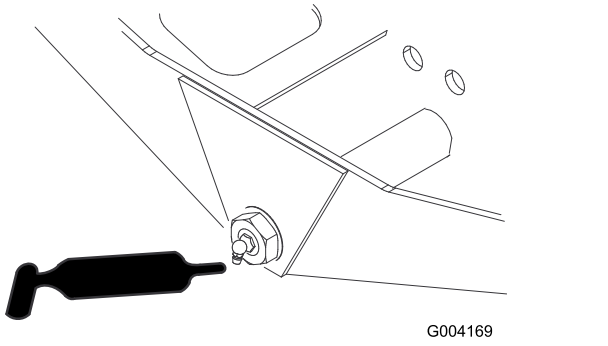

Figure 41

- Steering-cylinder ball joints (2) (Figure 42)

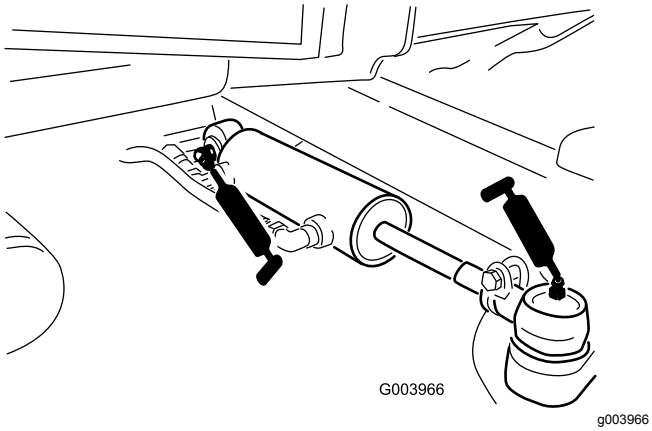

Figure 42

- Brake pedal (1) (Figure 43)

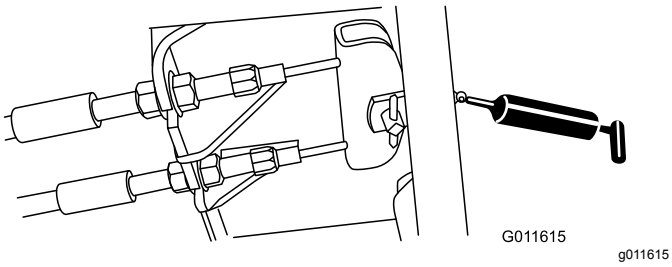

Figure 43

Engine Maintenance

Engine Safety

- Shut off the engine before checking the oil or adding oil to the crankcase.
- Do not change the governor speed or overspeed the engine.

Checking the Engine-Oil Level

Service Interval: Before each use or daily

The engine is shipped with oil in the crankcase; however, the oil level must be checked before and after the engine is first started.

Crankcase capacity: 5.2 L (5.5 US qt) with the filter

Use high-quality engine oil that meets the following specifications:

- API Classification Level Required: CH-4, CI-4 or higher
- Preferred oil: SAE 15W-40 (above 0 degrees F)
- Alternate oil: SAE 10W-30 or 5W-30 (all temperatures)

Toro Premium Engine oil is available from your distributor in either 15W-40 or 10W-30 viscosity.

1. Park the machine on a level surface, stop the engine, set the parking brake, and remove the key from the ignition switch.
2. Open the hood.
3. Remove the dipstick, wipe it clean, and install it (Figure 44).

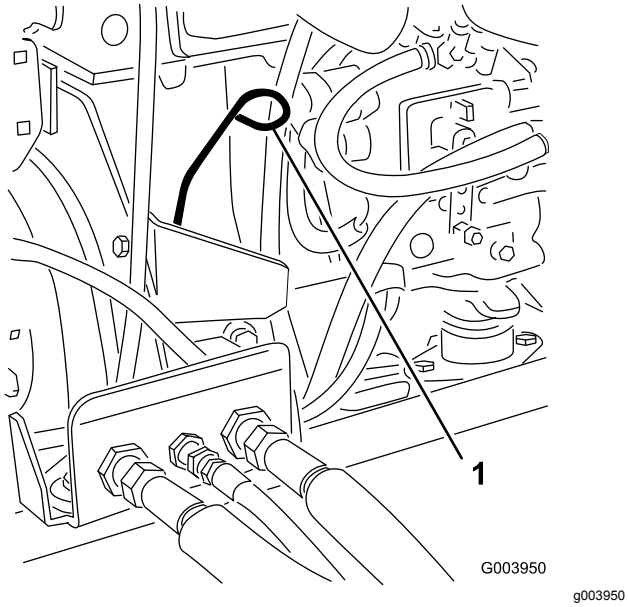

Figure 44

1. Dipstick

4. Remove dipstick and check the oil level on dipstick.

   Note: The oil level should be up to the Full mark.

5. If the oil level is below the Full mark, remove the fill cap (Figure 45) and add oil until the level reaches the Full mark on the dipstick.

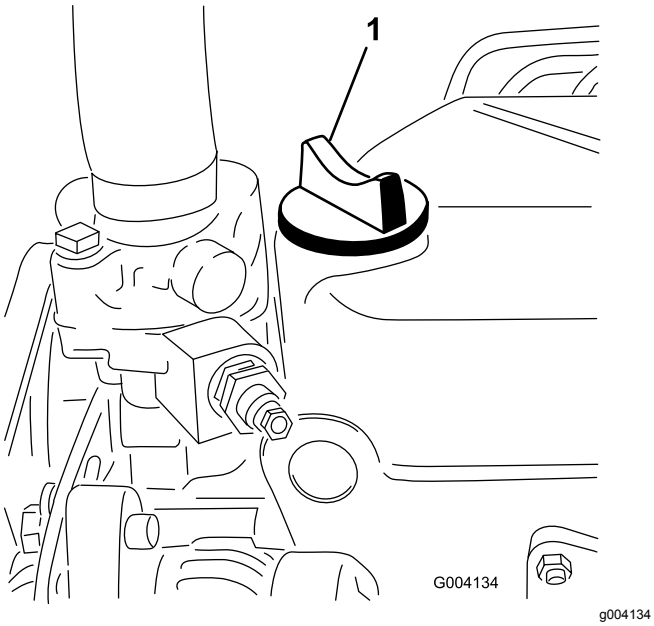

Figure 45

1. Oil-fill cap

Do not overfill the engine.

Important: **Make sure that you keep the engine-oil level between the upper and lower limits on the oil gauge. Engine failure may occur as a result of overfilling or underfilling the engine oil.**

6. Install the oil-fill cap and close the hood.

Servicing the Air Cleaner

Service Interval: Every 400 hours (Service the air cleaner earlier if the air cleaner indicator shows red. Service it more frequently in extremely dirty or dusty conditions.)

Check the air-cleaner body for damage which could cause an air leak. Replace if damaged. Check the whole intake system for leaks, damage, or loose hose clamps.

Service the air-cleaner filter only when the service indicator (Figure 46) requires it. Changing the air filter before it is necessary only increases the chance of dirt entering the engine when the filter is removed.

Important: **Make sure that the cover is seated correctly and seals with the air-cleaner body.**

1. Release the latches securing the air-cleaner cover to the air-cleaner body (Figure 46).

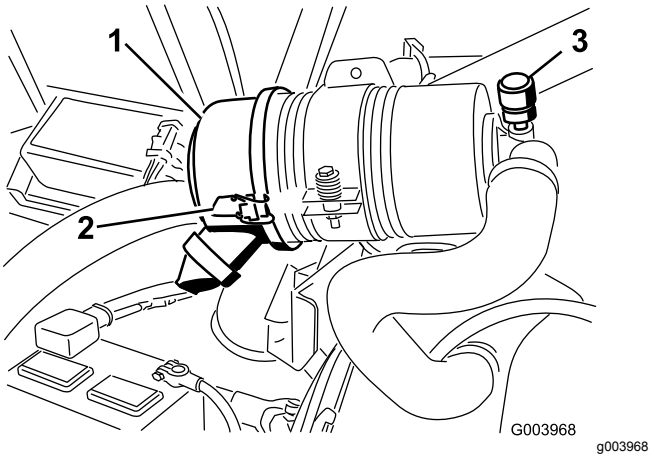

Figure 46

1. Air-cleaner cover
2. Air-cleaner-cover latch
3. Air-cleaner service indicator

2. Remove the cover from the air-cleaner body.
3. Before removing the filter, use low pressure air (40 psi, clean and dry) to help remove large accumulations of debris packed between outside of the filter and the canister.

   Important: **Avoid using high-pressure air which could force dirt through the filter into the intake tract.**

Note: This cleaning process prevents debris from migrating into the intake when the filter is removed.

4. Remove and replace the filter (Figure 47).

   Note: Cleaning of the used element is not recommended due to the possibility of damage to the filter media.

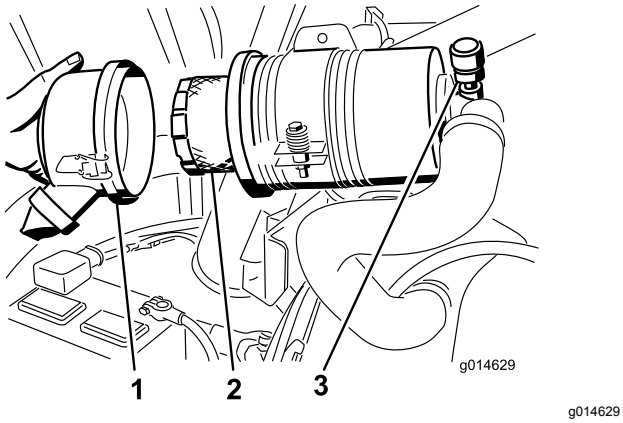

g014629

Figure 47

1. Air-cleaner cover
2. Air-cleaner filter
3. Air-cleaner indicator

5. Inspect the new filter for shipping damage, checking the sealing end of the filter and the body.

   Important: **Do not use a damaged element.**

6. Insert the new filter by applying pressure to the outer rim of the element to seat it in the canister.

   Important: **Do not apply pressure to the flexible center of the filter.**

7. Clean the dirt-ejection port located in the removable cover. Remove the rubber outlet valve from the cover, clean the cavity, and replace the outlet valve.
8. Install the cover orienting the rubber outlet valve in a downward position—between approximately 5 o'clock to 7 o'clock when viewed from the end.
9. Secure the latches.

Servicing the Engine Oil and Filter

Service Interval: After the first 50 hours—Change the engine oil and filter.

Every 150 hours

1. Remove the drain plug (Figure 48) and let the oil flow into a drain pan.

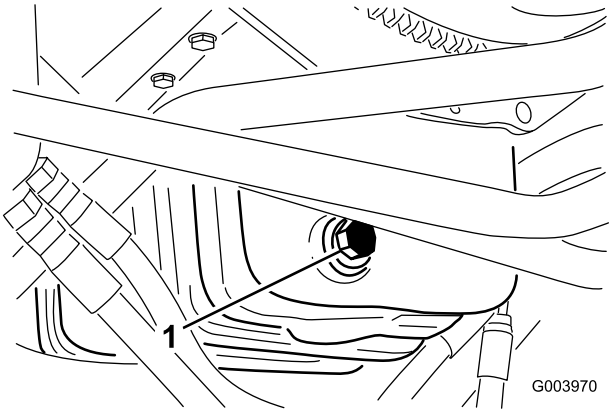

g003970

Figure 48

1. Oil-drain plug

2. When the oil is drained, install the drain plug.
3. Remove the oil filter (Figure 49).

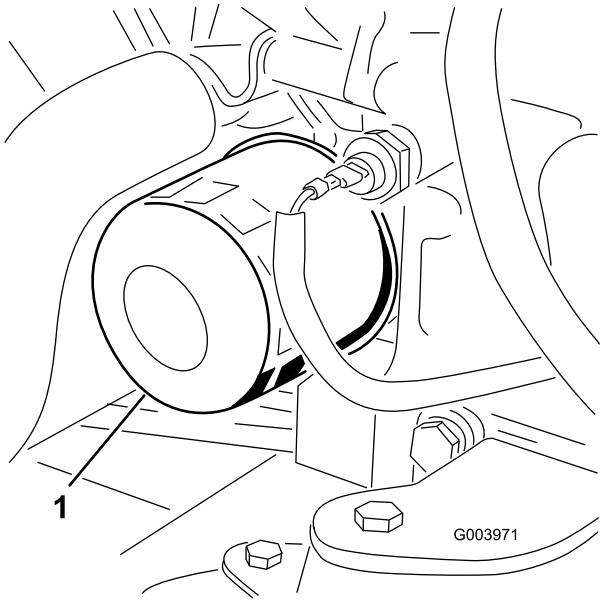

g003971

Figure 49

1. Oil filter

4. Apply a light coat of clean oil to the new filter seal.
5. Install the replacement oil filter to the filter adapter. Turn the oil filter clockwise until the

rubber gasket contacts the filter adapter, then tighten the filter an additional 1/2 turn.

Important: **Do not over-tighten the filter.**

6. Add oil to the crankcase; refer to Checking the Engine-Oil Level (page 37).

Adjusting the Throttle

1. Position the throttle lever forward so that it is approximately 3 mm (1/8 inch) from the front of the control-arm slot.
2. Loosen the throttle-cable connector, on the throttle cable, next to the injection-pump lever (Figure 50).

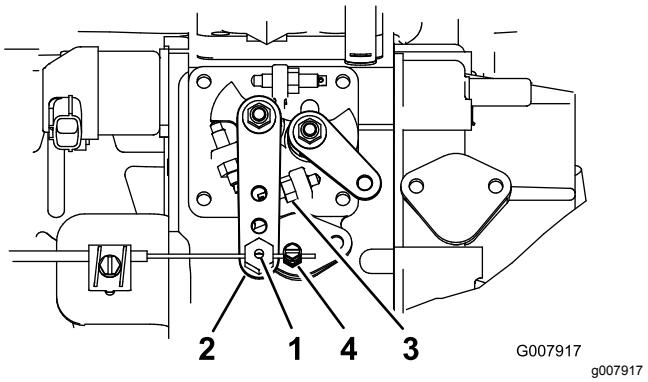

Figure 50

1. Throttle-cable pivot
2. Injection-pump-lever arm
3. High idle stop
4. Throttle-cable connector

3. Hold the injection-pump-lever arm against the high idle stop (Figure 50).
4. While pulling the throttle cable, to remove any slack, tighten the throttle-cable connector.

   Note: When tightened, the cable pivot must be free to swivel on the injection-pump-lever arm.
5. If the throttle does not stay in position during operation, increase the torque on the locknut, used to set the friction device on the throttle lever.

Fuel System Maintenance

⚠ DANGER

Under certain conditions, diesel fuel and fuel vapors are highly flammable and explosive. A fire or explosion from fuel can burn you and others and can cause property damage.

- **Use a funnel and fill the fuel tank outdoors, in an open area, when the engine is off and is cold. Wipe up any fuel that spills.**
- **Do not fill the fuel tank completely full. Add fuel to the fuel tank until the level is 6 to 13 mm (1/4 to 1/2 in) below the bottom of the filler neck. This empty space in the tank allows the fuel to expand.**
- **Never smoke when handling fuel, and stay away from an open flame or where fuel fumes may be ignited by a spark.**
- **Store fuel in a clean, safety-approved container and keep the cap in place.**

Draining the Fuel Tank

Service Interval: Every 800 hours—Drain and clean the fuel tank.

Before storage

Drain and clean the fuel tank if the fuel system becomes contaminated or if the machine is to be stored for an extended period. Use clean fuel to flush out the tank.

Checking the Fuel Lines and Connections

Service Interval: Every 400 hours (Or yearly, whichever comes first).

Check the fuel lines and connections for deterioration, damage, or loose connections.

Servicing the Water Separator

Service Interval: Every 400 hours—Replace the fuel-filter canister.

1. Place a clean container under the fuel filter.
2. Loosen the drain plug on the bottom of the filter canister.

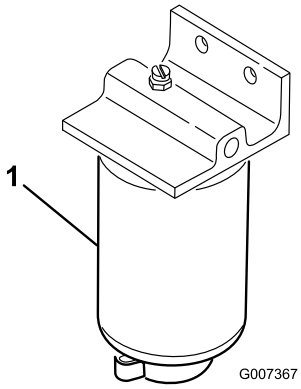

g007367

Figure 51

1. Water separator filter canister

3. Clean the area where the filter canister mounts.
4. Remove the filter canister and clean the mounting surface.
5. Lubricate the gasket on the filter canister with clean oil.
6. Install the filter canister by hand until the gasket contacts mounting surface, then rotate it an additional 1/2 turn.
7. Tighten the drain plug on the bottom of the filter canister.

Cleaning the Fuel Pick-up Tube Screen

The fuel pick-up tube, located inside the fuel tank, is equipped with a screen to help prevent debris from entering the fuel system. Remove the fuel pick-up tube and clean the screen as required.

Bleeding the Fuel System

Bleed the fuel system after you replace the water separator.

1. Loosen the drain plug on the bottom of the fuel-filer canister.
2. Turn the key switch to the On position.

   Note: The electric fuel pump runs to automatically bleed air from the fuel system. The time varies from 10 to 60 seconds.

Electrical System Maintenance

Important: **Before welding on the machine, disconnect both cables from the battery, both wire-harness plugs from the electronic control module, and the terminal connector from the alternator to prevent damage to the electrical system.**

Electrical System Safety

- Disconnect the battery before repairing the machine. Disconnect the negative terminal first and the positive last. Connect the positive terminal first and the negative last.
- Charge the battery in an open, well-ventilated area, away from sparks and flames. Unplug the charger before connecting or disconnecting the battery. Wear protective clothing and use insulated tools.

Servicing the Battery

Service Interval: Every 50 hours—Check the condition of and clean the battery.

Every 50 hours—Check the battery cable connections.

WARNING

CALIFORNIA
Proposition 65 Warning

Battery posts, terminals, and related accessories contain lead and lead compounds, chemicals known to the State of California to cause cancer and reproductive harm. Wash hands after handling.

⚠ DANGER

Battery electrolyte contains sulfuric acid which is a deadly poison and causes severe burns.

- **Do not drink electrolyte and avoid contact with skin, eyes, or clothing. Wear safety glasses to shield your eyes and rubber gloves to protect your hands.**
- **Fill the battery where clean water is always available for flushing the skin.**

⚠ WARNING

Charging the battery produces gasses that can explode.

Never smoke near the battery and keep sparks and flames away from it.

Keep the terminals and the entire battery case clean because a dirty battery will discharge slowly. To clean the battery, wash the entire case with a solution of baking soda and water. Rinse it with clear water.

Fuses

There are 8 fuses in the electrical system. The fuse block (Figure 52) is located behind the control arm access panel.

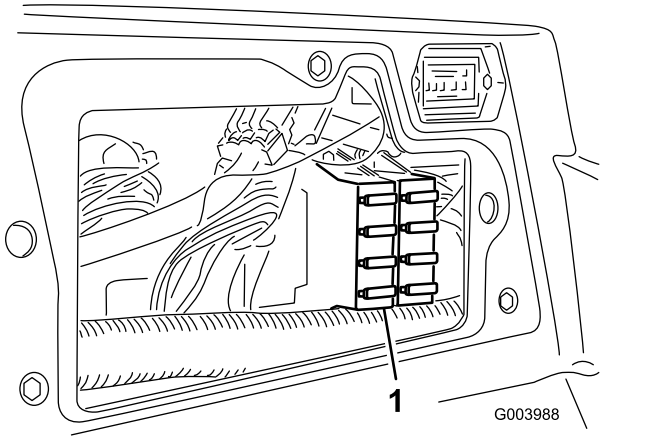

Figure 52

1. Fuse block

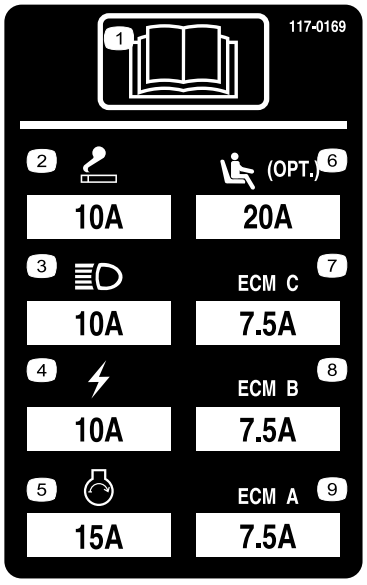

Figure 53

Drive System Maintenance

Checking the Torque of the Wheel Nuts

Service Interval: After the first hour

After the first 10 hours

Every 250 hours

Torque the wheel nuts to 94 to 122 N-m (70 to 90 ft-lb).

⚠ WARNING

Failure to maintain proper torque of the wheel nuts could result in personal injury.

Adjusting the Traction Drive for Neutral

The machine must not creep when the traction pedal is released. If it does creep, adjust as follows:

1. Park the machine on a level surface, stop the engine, and lower the cutting units to the ground.
2. Jack up the front of the machine until the front tires are off the shop floor. Support the machine with jack stands to prevent it from falling accidentally.

   Note: On 4-wheel-drive models, the rear tires must also be off the ground.
3. On the right side of the hydrostat, loosen the locknut on the traction-adjustment cam (Figure 54).

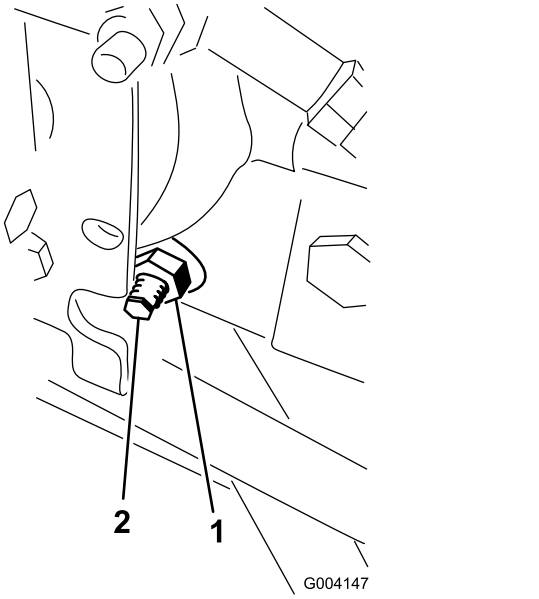

Figure 54

1. Locknut
2. Traction-adjustment cam

⚠ WARNING

The engine must be running so the final adjustment of the traction adjustment cam can be performed. This could cause personal injury.

Keep hands, feet, face, and other body parts away from the muffler, other hot parts of the engine, and any rotating parts.

4. Start the engine and rotate the cam hex in either direction until the wheels cease rotation.
5. Tighten the locknut to secure the adjustment.
6. Stop the engine, remove the jack stands, and lower the machine to the ground.
7. Test drive the machine to make sure that it does not creep.

Adjusting the Rear Wheel Toe-in

Service Interval: Every 800 hours—Check the rear wheel toe-in.

1. Rotate the steering wheel so that the rear wheels are straight ahead.
2. Loosen the jam nut on each end of the tie rod (Figure 55).

   Note: The end of the tie rod with the external groove is a left-hand thread.

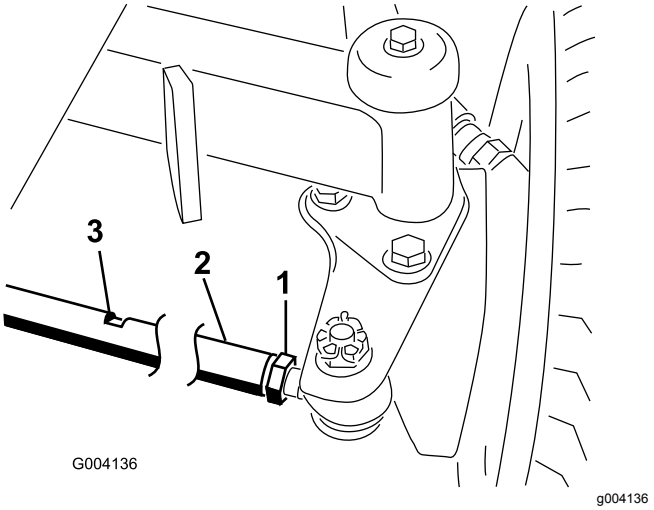

Figure 55

1. Jam nut
2. Tie rod
3. Wrench slot

3. Using the wrench slot, rotate the tie rod.
4. Measure the distance at the front and rear of the rear wheels at axle height.

   Note: The distance at the front of the rear wheels should be less than 6 mm (1/4 inch) of the distance measured at the rear of the wheels.
5. Repeat procedure as required.

Cooling System Maintenance

Cooling System Safety

- Swallowing engine coolant can cause poisoning; keep out of reach from children and pets.
- Discharge of hot, pressurized coolant or touching a hot radiator and surrounding parts can cause severe burns.
  - Always allow the engine to cool at least 15 minutes before removing the radiator cap.
  - Use a rag when opening the radiator cap, and open the cap slowly to allow steam to escape.

Checking the Cooling System

Clean debris off the screen, oil cooler, and front of the radiator daily and more often if conditions are extremely dusty and dirty; refer to Removing Debris from the Cooling System (page 44).

The cooling system is filled with a 50/50 solution of water and permanent ethylene glycol antifreeze. Check the level of coolant in the expansion tank at the beginning of each day before starting the engine. The capacity of the cooling system is 6.6 L (7.0 US qt).

⚠ CAUTION

If the engine has been running, the pressurized, hot coolant can escape and cause burns.

- **Do not open the radiator cap when the engine is running.**
- **Use a rag when opening the radiator cap, and open the cap slowly to allow steam to escape.**

1. Check the level of coolant in the expansion tank (Figure 56).

   The coolant level should be between the marks on the side of the tank.

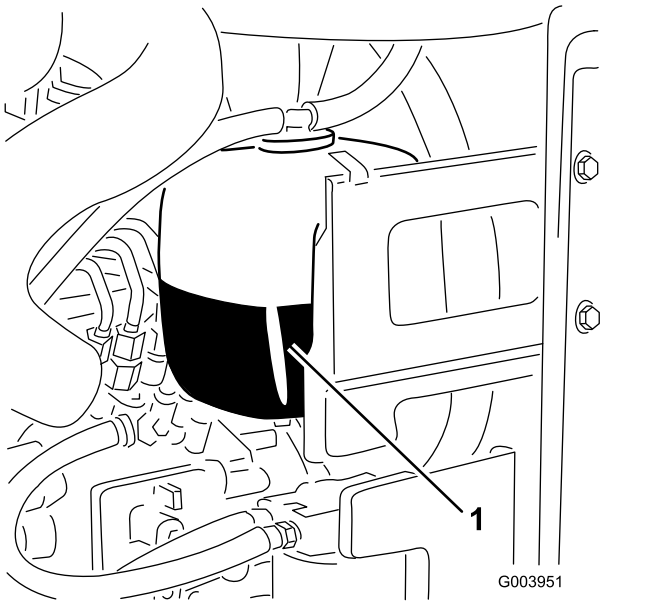

Figure 56

1. Expansion tank

2. If the coolant level is low, remove the expansion-tank cap and replenish the system. **Do not overfill the tank.**
3. Install the expansion-tank cap.

Removing Debris from the Cooling System

Service Interval: Before each use or daily (More frequently in dirty operating conditions).

Every 100 hours—Inspect the cooling system hoses.

Every 2 years—Flush and replace the cooling system fluid.

1. Turn the engine off and remove the key from the ignition switch.
2. Thoroughly clean all debris out of the engine area.
3. Unlatch the clamp and pivot open the rear screen (Figure 57).

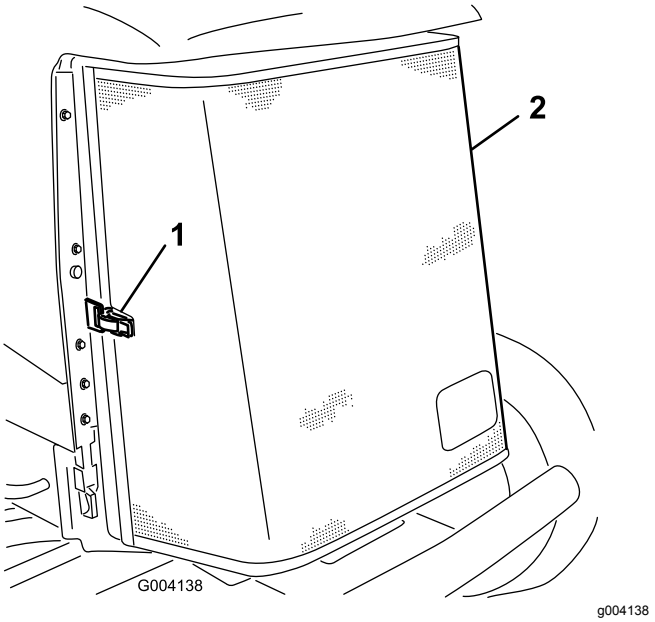

g004138

Figure 57

1. Rear-screen latch
2. Rear screen

4. Thoroughly clean the screen thoroughly with compressed air.
5. Pivot the latches inward to release the oil cooler (Figure 58).

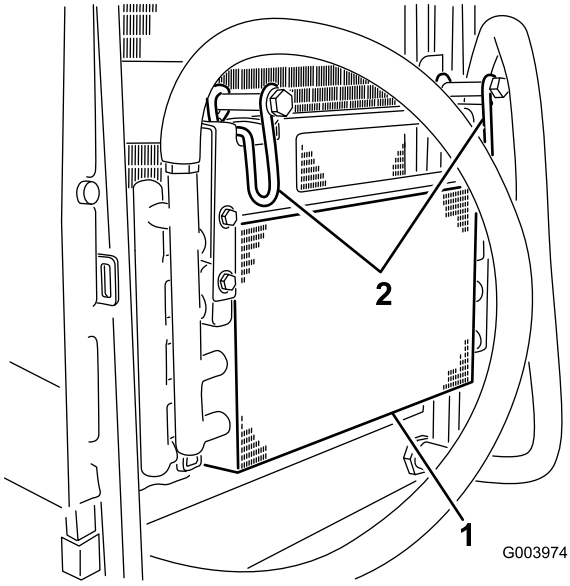

g003974

Figure 58

1. Oil cooler
2. Oil-cooler latches

6. Thoroughly clean both sides of the oil cooler and the radiator (Figure 59) with compressed air.

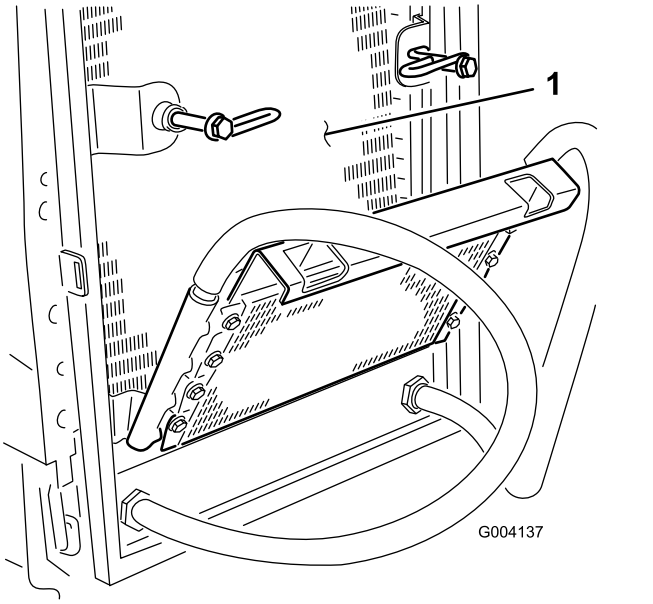

g004137

Figure 59

1. Radiator

7. Pivot the oil cooler back into position and secure the latches.
8. Close the screen and secure the latch.

Brake Maintenance

Adjusting the Parking Brakes

Adjust the brakes when there is more than 2.5 cm (1 inch) of free travel (Figure 60) of the brake pedal, or when more holding force is required. Free travel is the distance the brake pedal moves before you feel braking resistance.

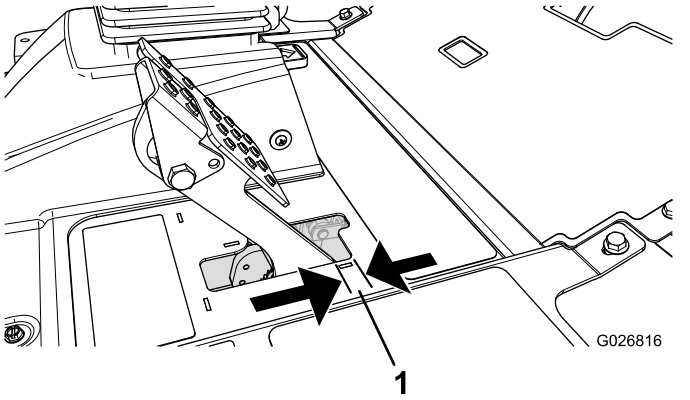

Figure 60

1. Free travel

Note: Use the wheel-motor backlash to rock the drums back and forth to ensure that the drums are free, prior to and after the adjustment.

1. To reduce free travel of the brake pedals, tighten the brakes by loosening the front nut on the threaded end of the brake cable (Figure 61).

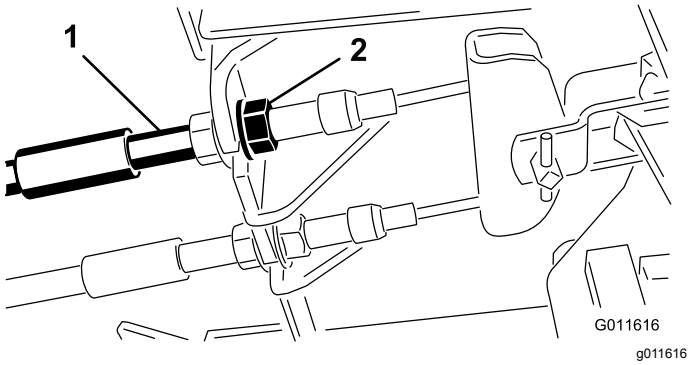

Figure 61

1. Brake cables
2. Front nuts

2. Tighten the rear nut to move the cable backward until brake pedals have 6 to 13 mm (1/4 to 1/2 inch) of free travel (Figure 60), before wheel lock-up is achieved.
3. Tighten the front nuts, ensuring that both cables actuate the brakes simultaneously.

Note: Ensure that the cable conduit does not rotate during the tightening procedure.

Adjusting the Parking-Brake Latch

If the parking brake fails to engage and latch, an adjustment to the brake pawl is required.

1. Loosen the 2 screws securing the parking-brake pawl to the frame (Figure 62).

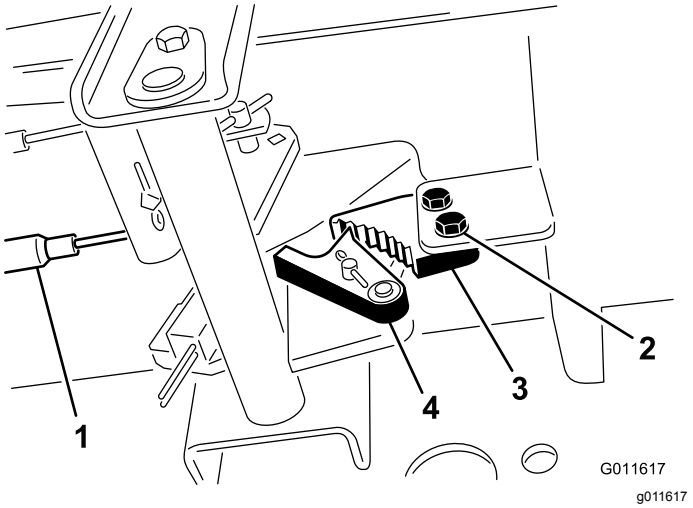

Figure 62

1. Brake cables
2. Screws (2)
3. Parking-brake pawl
4. Brake detent

2. Press the parking-brake pedal forward until the brake detent completely engages on the brake pawl (Figure 62).
3. Tighten the 2 screws locking the adjustment.
4. Press the brake pedal to release the parking brake.
5. Check the adjustment and adjust it as required.

Belt Maintenance

Check the condition and tension of the alternator belt after the first day of operation and every 100 operating hours thereafter.

Tensioning the Alternator Belt

Service Interval: After the first 8 hours—Check the condition and tension of the alternator belt.

Every 100 hours

1. Open the hood.
2. Check the tension of the alternator belt by pressing it (Figure 63) midway between the alternator and the crankshaft pulleys with 10 kg (22 lb) of force.

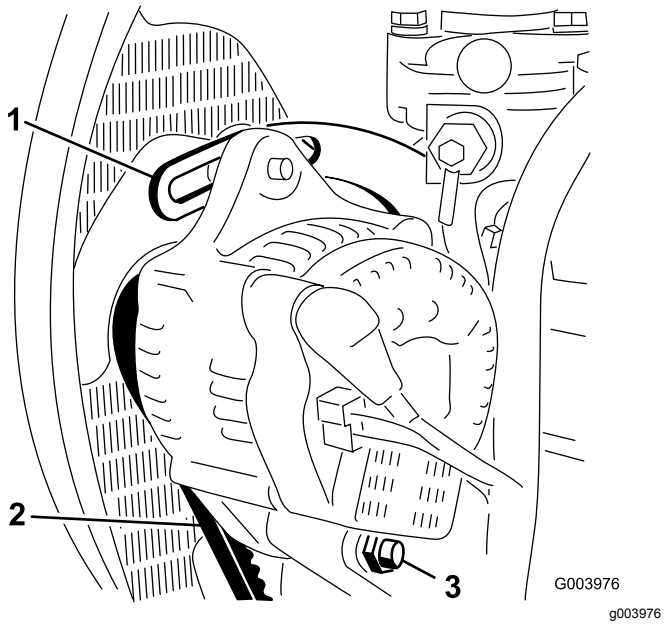

Figure 63

1. Brace
2. Alternator belt
3. Pivot bolt

Note: The belt should deflect 11 mm (7/16 inch). If the deflection is incorrect, proceed to step 3. If correct, continue operation.

3. Loosen the bolt securing the brace to the engine (Figure 63), the bolt securing the alternator to the brace and the pivot bolt.
4. Insert a pry bar between the alternator and the engine and pry out on the alternator.
5. When you achieve the proper tension, tighten the alternator, brace, and pivot bolts to secure the adjustment.

Hydraulic System Maintenance

Hydraulic System Safety

- Seek immediate medical attention if fluid is injected into skin. Injected fluid must be surgically removed within a few hours by a doctor.
- Ensure that all hydraulic-fluid hoses and lines are in good condition and all hydraulic connections and fittings are tight before applying pressure to the hydraulic system.
- Keep your body and hands away from pinhole leaks or nozzles that eject high-pressure hydraulic fluid.
- Use cardboard or paper to find hydraulic leaks.
- Safely relieve all pressure in the hydraulic system before performing any work on the hydraulic system.

Checking the Hydraulic-Fluid Level

Service Interval: Before each use or daily

The reservoir is filled at the factory with 56.7 L (15 US gallons) of high-quality hydraulic fluid. The best time to check the hydraulic oil is when the fluid is cold. The machine should be in its transport configuration. The recommended replacement fluid is:

> **Toro Premium All Season Hydraulic Fluid** (Available in 19 L (5 US gallon) pails or 208 L (55 US gallon) drums. See the *Parts Catalog* or your Toro Distributor for part numbers.)

Alternative fluids: If the Toro fluid is not available, other conventional, petroleum-based fluids may be used, provided that they meet all of the following material properties and industry specifications. Check with your oil supplier to see whether the oil meets these specifications.

Note: Toro does not assume responsibility for damage caused by improper substitutions, so use only products from reputable manufacturers who stand behind their recommendation.

High Viscosity Index/Low Pour Point Antiwear Hydraulic Fluid, ISO VG 46 Multigrade

Material Properties:

Viscosity, ASTM D445	cSt @ 40°C (104°F) 44 to 48 cSt @ 100°C (212°F) 7.9 to 9.1
Viscosity index, ASTM D2270	140 or higher (high viscosity index indicates a multiweight fluid)
Pour point, ASTM D97	-36.7°C to -45°C (-34°F to -49°F)
FZG, fail stage	11 or better
Water content (new fluid)	500 ppm (maximum)

Industry Specifications:

Vickers I-286-S, Vickers M-2950-S, Denison HF-0, Vickers 35 VQ 25 (Eaton ATS373-C)

The proper hydraulic fluids must be specified for mobile machinery (as opposed to industrial plant usage), multiweight-type, with ZnDTP or ZDDP anti-wear additive package (not an ashless-type fluid).

Important: **Many hydraulic fluids are almost colorless, making it difficult to spot leaks. A red dye additive for the hydraulic system oil is available in 20 ml (2/3 oz) bottles. 1 bottle is sufficient for 15 to 22 L (4 to 6 US gallons) of hydraulic oil. Order Part Number 44-2500 from your Toro Distributor.**

> **Synthetic, Biodegradable Hydraulic Fluid** (Available in 19 L (5 US gallon) pails or 208 L (55 US gallon) drums. See the *Parts Catalog* or your Toro Distributor for part numbers.)

This high-quality, synthetic, biodegradable fluid has been tested and found compatible for this Toro model. Other brands of synthetic fluid may have seal compatibility problems and Toro cannot assume responsibility for unauthorized substitutions.

Note: This synthetic fluid is not compatible with the Toro Biodegradable Fluid previously sold. See your Toro Distributor for more information.

1. Position the machine on a level surface, lower the cutting units, and stop the engine.
2. Clean the area around the filler neck and the cap of the hydraulic tank (Figure 64).

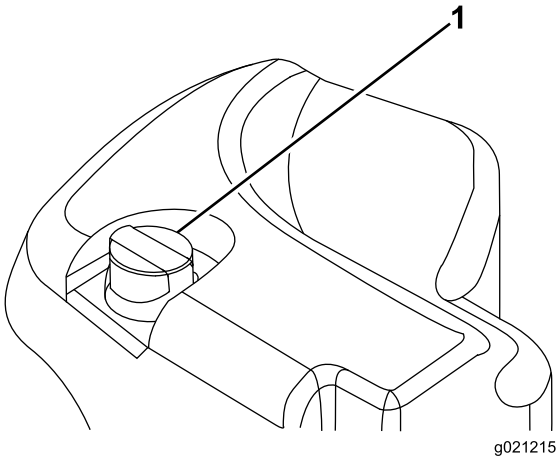

Figure 64

1. Hydraulic-tank cap

3. Remove the cap/dipstick from the filler neck and wipe it with a clean rag.
4. Insert the dipstick into the filler neck; then remove it and check the level of fluid.

   Note: The fluid level should be within operating range on the dipstick.

   Important: **Do not overfill the tank.**
5. If the level is low, add the appropriate amount of fluid to raise the level to the full mark.
6. Install the cap/dipstick onto the filler neck.

Changing the Hydraulic Fluid

Service Interval: Every 800 hours

Every 2 years—Drain and flush the hydraulic tank.

If the fluid becomes contaminated, contact your Toro Distributor because the system must be flushed. Contaminated fluid looks milky or black when compared to clean oil.

1. Stop the engine and raise the hood.

2. Place a large drain pan under the fitting secured to the bottom of the hydraulic-fluid reservoir (Figure 65).

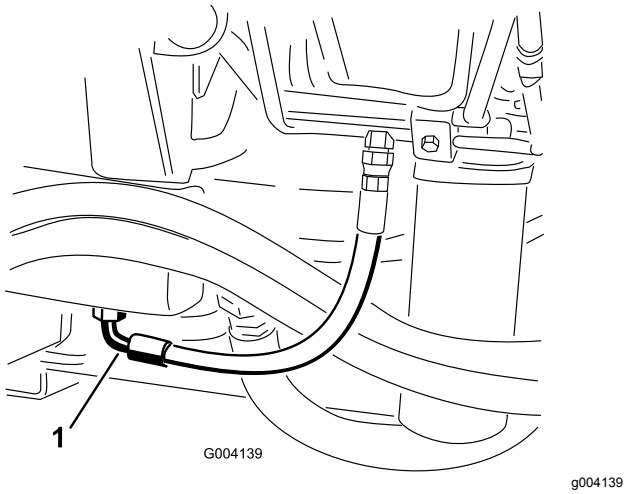

Figure 65

1. Hose

3. Disconnect the hose from the bottom of the fitting and let the hydraulic fluid flow into the drain pan.
4. Install the hose when hydraulic fluid stops draining.
5. Fill the reservoir with approximately 56.7 L (15 US gallons) of hydraulic fluid; refer to Checking the Hydraulic-Fluid Level (page 48)

   Important: **Use only the hydraulic fluids specified. Other fluids could cause system damage.**
6. Install the reservoir cap.
7. Start the engine and use all of the hydraulic controls to distribute hydraulic fluid throughout the system. Also check for leaks.
8. Stop the engine.
9. Check the level of the hydraulic fluid and add enough to raise level to the Full mark on the dipstick.

   Important: **Do not overfill the reservoir.**

Replacing the Hydraulic Filters

Service Interval: Every 800 hours (Or more often if the service-interval indicator is in the red zone).

The hydraulic system is equipped with a service-interval indicator (Figure 66). With the engine running at operating temperature, view the indicator, it should be in the green zone. When the indicator is in the red zone, change the hydraulic filters.

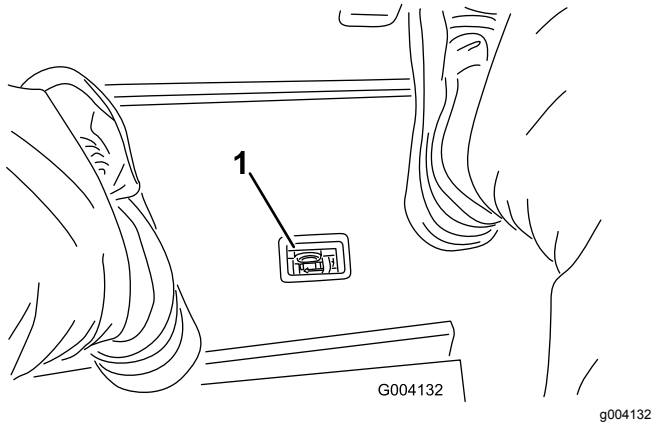

Figure 66

1. Hydraulic-filter-restriction indicator

Important: **Use of any other filters may void the warranty on some components.**

1. Position the machine on a level surface, lower the cutting units, stop the engine, engage the parking brake, and remove the key from the ignition switch.
2. Clean the area around the filter mounting area and place a drain pan under filter (Figure 67 and Figure 68).

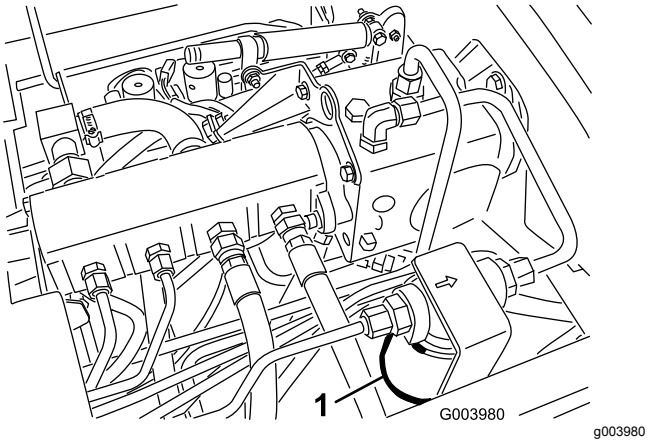

Figure 67

1. Hydraulic filter

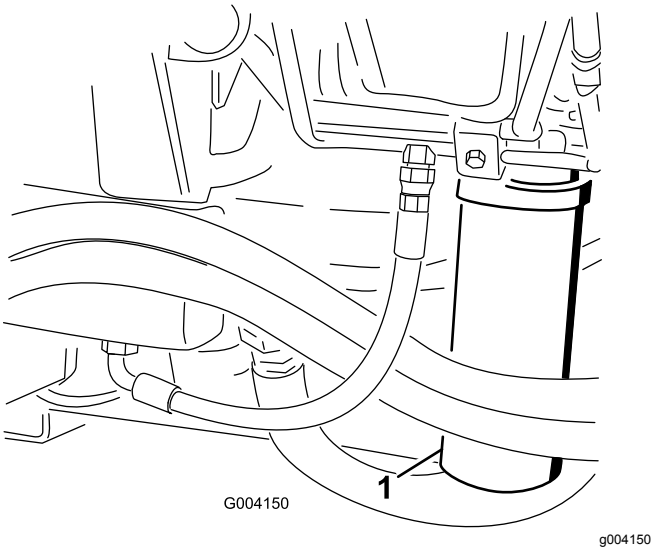

Figure 68

1. Hydraulic filter

3. Remove the filter.
4. Lubricate the gasket on the new filter with hydraulic oil.
5. Ensure that the filter mounting area is clean.
6. Install the filter by hand until the gasket contacts the mounting surface, then rotate it an additional 1/2 turn.
7. Repeat the procedure on the other filter.
8. Start the engine and let it run for about 2 minutes to purge air from the system.
9. Stop the engine and check for leaks.

Checking the Hydraulic Lines and Hoses

Service Interval: Before each use or daily

Check hydraulic lines and hoses for leaks, kinked lines, loose mounting supports, wear, loose fittings, weather deterioration, and chemical deterioration. Make all necessary repairs before operating.

⚠ WARNING

Hydraulic fluid escaping under pressure can penetrate skin and cause injury.

- **Make sure that all hydraulic-fluid hoses and lines are in good condition and all hydraulic connections and fittings are tight before applying pressure to the hydraulic system.**
- **Keep your body and hands away from pin hole leaks or nozzles that eject high-pressure hydraulic fluid.**
- **Use cardboard or paper to find hydraulic leaks.**
- **Safely relieve all pressure in the hydraulic system before performing any work on the hydraulic system.**
- **Get immediate medical help if fluid is injected into skin.**

Testing the Pressure in the Hydraulic Circuits

Use the hydraulic system test ports to test the pressure in the hydraulic circuits. Contact your Toro Distributor for assistance.

Use the test ports on the front hydraulic tubes (Figure 69) to assist in troubleshooting the traction circuit.

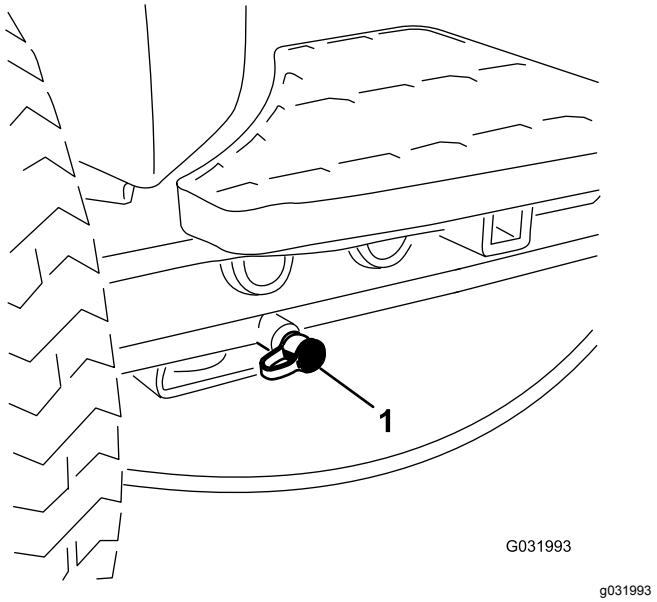

Figure 69

1. Traction-circuit test port

Use the test ports on the mow manifold block (Figure 70) to assist in troubleshooting the mow circuit.

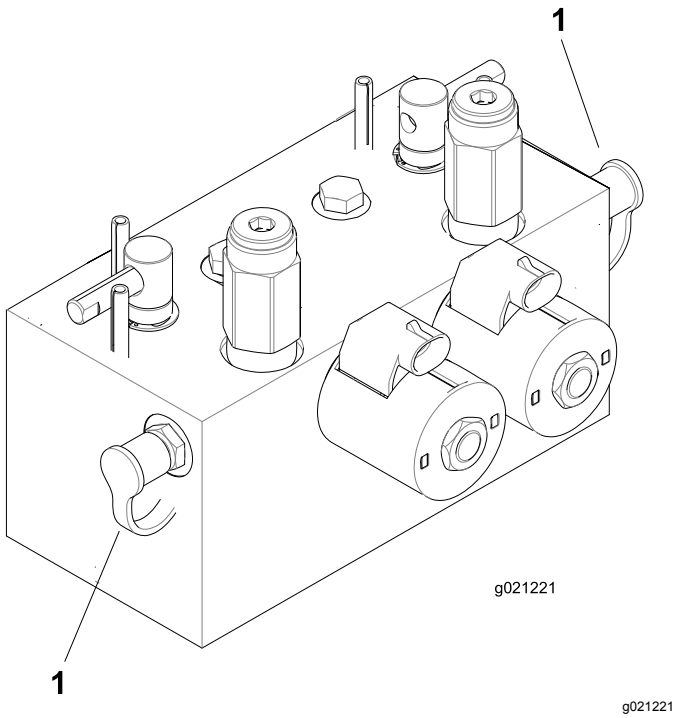

g021221

Figure 70

1. Mow-circuit test ports (2)

Use the test port on the lift manifold block (Figure 71) to assist in troubleshooting the lift circuit.

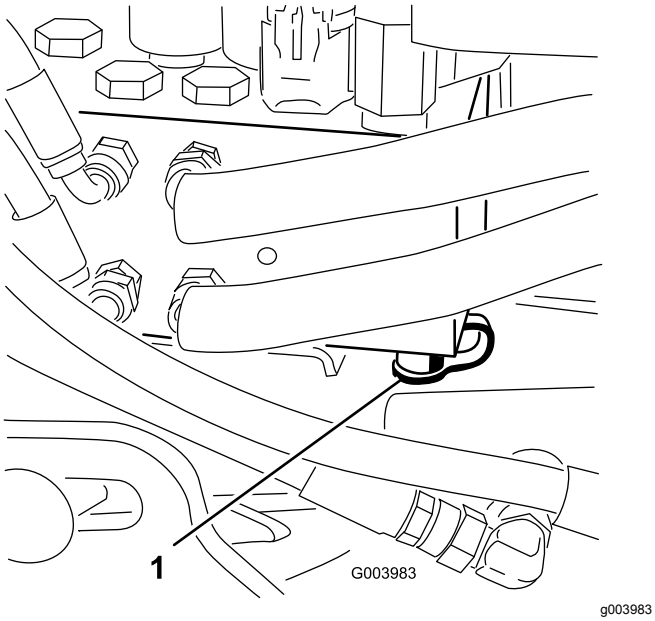

g003983

Figure 71

1. Lift-circuit test port

Cutting Unit System Maintenance

Blade Safety

- A worn or damaged blade or bedknife can break, and a piece could be thrown toward you or bystanders, resulting in serious personal injury or death.
- Inspect the cutting units periodically for excessive wear or damage.
- Use care when checking the cutting units. Wrap the blades or wear gloves, and use caution when servicing the reels and bedknives. Only replace or sharpen the reels and bedknives; never straighten or weld them.
- On machines with multiple cutting units, take care when rotating a reel; it can cause the reels in the other cutting units to rotate.

Checking the Reel-to-Bedknife Contact

Service Interval: Before each use or daily

Check the reel-to-bedknife contact, regardless of whether the quality of cut had previously been acceptable. There must be light contact across the full length of the reel and the bedknife (refer to Adjusting the Reel to Bedknife in the cutting unit *Operator's Manual*).

Backlapping the Cutting Units

⚠ WARNING

Contact with the reels or other moving parts can result in personal injury.

- **Keep fingers, hands, and clothing away from the reels or other moving parts.**
- **Never attempt to turn the reels by hand or foot while the engine is running.**

Note: When backlapping, the front units all operate together, and the rear units operate together.

1. Position the machine on a level surface, lower the cutting units, stop the engine, engage the parking brake, and move the Enable/Disable switch to the DISABLE position.
2. Unlock and raise the seat to expose the backlap levers (Figure 72).

3. Make initial reel-to-bedknife adjustments appropriate for backlapping on all cutting units which are to be backlapped; refer to the cutting unit *Operator's Manual*.
4. Start the engine and run at low idle speed.

⚠ DANGER

Changing the engine speed while backlapping may cause the reels to stall.

- **Never change the engine speed while backlapping.**
- **Only backlap at idle engine speed.**

5. Select either the front, rear, or both backlap levers to determine which units to backlap (Figure 72).

⚠ DANGER

To avoid personal injury, be certain that you are clear of the cutting units before proceeding.

6. With the Mow/Transport lever in the MOW position, move the Enable/Disable switch to the ENABLE position. Move the Lower Mow/Lift control forward to start the backlapping operation on the designated reels.
7. Apply lapping compound with a long-handled brush.

   Note: Never use a short-handled brush.
8. If the reels stall or become erratic while backlapping, select a higher reel-speed setting until the speed stabilizes, then return the reel speed to your desired speed.
9. To make an adjustment to the cutting units while backlapping, turn the reels off by moving the Lower Mow/Raise lever rearward and the Enable/Disable switch to the DISABLE position, and stop the engine.

   After completing the adjustments, repeat steps 4 through 8.

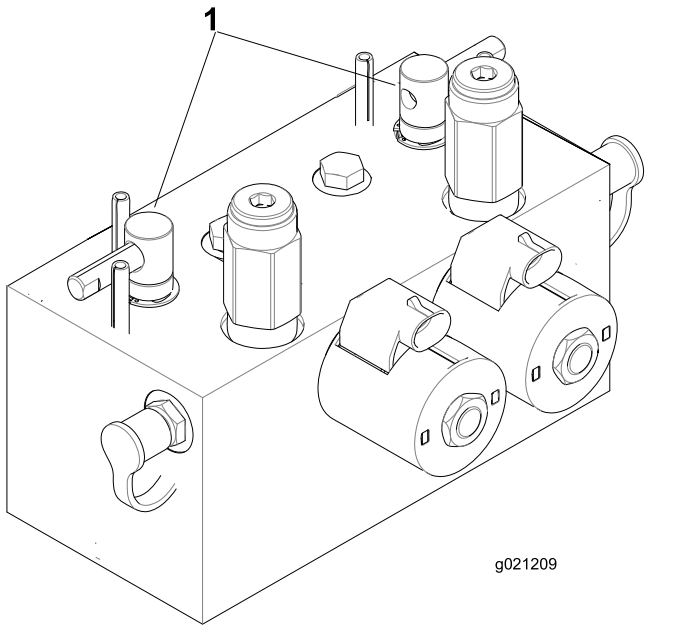

g021209

Figure 72

1. Backlap levers

10. Repeat the procedure for all cutting units you want to backlap.
11. When finished, return the backlap levers to the MOW position, lower the seat, and wash all lapping compound off the cutting units.

    Note: Adjust cutting unit reel to bedknife as needed. Adjust the cutting-unit reel speed to the desired mowing setting.

    Important: **If the backlap switch is not returned to the OFF position after backlapping, the cutting units do not raise or function properly.**

    Note: For a better cutting edge, run a file across the front face of the bedknife after lapping. This removes any burrs or rough edges that may have built up on the cutting edge.

Storage

Preparing the Traction Unit

1. Thoroughly clean the traction unit, cutting units, and engine.
2. Check the tire pressure. Inflate all traction unit tires to 83 to 103 kPa (12 to 15 psi).
3. Check all fasteners for looseness and tighten them as necessary.
4. Grease all grease fittings and pivot points. Wipe up any excess lubricant.
5. Lightly sand and use touch-up paint on painted areas that are scratched, chipped, or rusted. Repair any dents in the metal body.
6. Service the battery and cables as follows:
   A. Remove the battery terminals from the battery posts.
   B. Clean the battery, terminals, and posts with a wire brush and baking soda solution.
   C. Coat the cable terminals and battery posts with Grafo 112X skin-over grease (Toro Part Number 505-47) or petroleum jelly to prevent corrosion.
   D. Slowly recharge the battery every 60 days for 24 hours to prevent lead sulfation of the battery.

Preparing the Engine

1. Drain the engine oil from the oil pan and replace the drain plug.
2. Remove and discard the oil filter. Install a new oil filter.
3. Refill the oil pan with designated quantity of motor oil.
4. Start the engine and run it at idle speed for approximately 2 minutes.
5. Stop the engine.
6. Thoroughly drain all fuel from the fuel tank, lines, and the fuel filter/water-separator assembly.
7. Flush the fuel tank with fresh, clean diesel fuel.
8. Secure all fuel-system fittings.
9. Thoroughly clean and service the air-cleaner assembly.
10. Seal the air-cleaner inlet and the exhaust outlet with weatherproof tape.
11. Check the antifreeze protection and add as needed for expected minimum temperature in your area.

EEA/UK Privacy Notice

Toro's Use of Your Personal Information

The Toro Company ("Toro") respects your privacy. When you purchase our products, we may collect certain personal information about you, either directly from you or through your local Toro company or dealer. Toro uses this information to fulfil contractual obligations - such as to register your warranty, process your warranty claim or to contact you in the event of a product recall - and for legitimate business purposes - such as to gauge customer satisfaction, improve our products or provide you with product information which may be of interest. Toro may share your information with our subsidiaries, affiliates, dealers or other business partners in connection these activities. We may also disclose personal information when required by law or in connection with the sale, purchase or merger of a business. We will never sell your personal information to any other company for marketing purposes.

Retention of your Personal Information

Toro will keep your personal information as long as it is relevant for the above purposes and in accordance with legal requirements. For more information about applicable retention periods please contact legal@toro.com.

Toro's Commitment to Security

Your personal information may be processed in the US or another country which may have less strict data protection laws than your country of residence. Whenever we transfer your information outside of your country of residence, we will take legally required steps to ensure that appropriate safeguards are in place to protect your information and to make sure it is treated securely.

Access and Correction

You may have the right to correct or review your personal data, or object to or restrict the processing of your data. To do so, please contact us by email at legal@toro.com. If you have concerns about the way in which Toro has handled your information, we encourage you to raise this directly with us. Please note that European residents have the right to complain to your Data Protection Authority.

California Proposition 65 Warning Information

What is this warning?

You may see a product for sale that has a warning label like the following:



WARNING: Cancer and Reproductive Harm—www.p65Warnings.ca.gov.

What is Prop 65?

Prop 65 applies to any company operating in California, selling products in California, or manufacturing products that may be sold in or brought into California. It mandates that the Governor of California maintain and publish a list of chemicals known to cause cancer, birth defects, and/or other reproductive harm. The list, which is updated annually, includes hundreds of chemicals found in many everyday items. The purpose of Prop 65 is to inform the public about exposure to these chemicals.

Prop 65 does not ban the sale of products containing these chemicals but instead requires warnings on any product, product packaging, or literature with the product. Moreover, a Prop 65 warning does not mean that a product is in violation of any product safety standards or requirements. In fact, the California government has clarified that a Prop 65 warning "is not the same as a regulatory decision that a product is 'safe' or 'unsafe.'" Many of these chemicals have been used in everyday products for years without documented harm. For more information, go to https://oag.ca.gov/prop65/faqs-view-all.

A Prop 65 warning means that a company has either (1) evaluated the exposure and has concluded that it exceeds the "no significant risk level"; or (2) has chosen to provide a warning based on its understanding about the presence of a listed chemical without attempting to evaluate the exposure.

Does this law apply everywhere?

Prop 65 warnings are required under California law only. These warnings are seen throughout California in a wide range of settings, including but not limited to restaurants, grocery stores, hotels, schools, and hospitals, and on a wide variety of products. Additionally, some online and mail order retailers provide Prop 65 warnings on their websites or in catalogs.

How do the California warnings compare to federal limits?

Prop 65 standards are often more stringent than federal and international standards. There are various substances that require a Prop 65 warning at levels that are far lower than federal action limits. For example, the Prop 65 standard for warnings for lead is 0.5 µg/day, which is well below the federal and international standards.

Why don't all similar products carry the warning?

- Products sold in California require Prop 65 labelling while similar products sold elsewhere do not.
- A company involved in a Prop 65 lawsuit reaching a settlement may be required to use Prop 65 warnings for its products, but other companies making similar products may have no such requirement.
- The enforcement of Prop 65 is inconsistent.
- Companies may elect not to provide warnings because they conclude that they are not required to do so under Prop 65; a lack of warnings for a product does not mean that the product is free of listed chemicals at similar levels.

Why does Toro include this warning?

Toro has chosen to provide consumers with as much information as possible so that they can make informed decisions about the products they buy and use. Toro provides warnings in certain cases based on its knowledge of the presence of one or more listed chemicals without evaluating the level of exposure, as not all the listed chemicals provide exposure limit requirements. While the exposure from Toro products may be negligible or well within the "no significant risk" range, out of an abundance of caution, Toro has elected to provide the Prop 65 warnings. Moreover, if Toro does not provide these warnings, it could be sued by the State of California or by private parties seeking to enforce Prop 65 and subject to substantial penalties.

The Toro Warranty

A Two-Year Limited Warranty

Conditions and Products Covered

The Toro Company and its affiliate, Toro Warranty Company, pursuant to an agreement between them, jointly warrant your Toro Commercial product ("Product") to be free from defects in materials or workmanship for two years or 1500 operational hours*, whichever occurs first. This warranty is applicable to all products with the exception of Aerators (refer to separate warranty statements for these products). Where a warrantable condition exists, we will repair the Product at no cost to you including diagnostics, labor, parts, and transportation. This warranty begins on the date the Product is delivered to the original retail purchaser.
* Product equipped with an hour meter.

Instructions for Obtaining Warranty Service

You are responsible for notifying the Commercial Products Distributor or Authorized Commercial Products Dealer from whom you purchased the Product as soon as you believe a warrantable condition exists. If you need help locating a Commercial Products Distributor or Authorized Dealer, or if you have questions regarding your warranty rights or responsibilities, you may contact us at:

Toro Commercial Products Service Department
Toro Warranty Company
8111 Lyndale Avenue South
Bloomington, MN 55420-1196

952–888–8801 or 800–952–2740
E-mail: commercial.warranty@toro.com

Owner Responsibilities

As the Product owner, you are responsible for required maintenance and adjustments stated in your *Operator's Manual*. Failure to perform required maintenance and adjustments can be grounds for disallowing a warranty claim.

Items and Conditions Not Covered

Not all product failures or malfunctions that occur during the warranty period are defects in materials or workmanship. This warranty does not cover the following:

- Product failures which result from the use of non-Toro replacement parts, or from installation and use of add-on, or modified non-Toro branded accessories and products. A separate warranty may be provided by the manufacturer of these items.
- Product failures which result from failure to perform recommended maintenance and/or adjustments. Failure to properly maintain your Toro product per the Recommended Maintenance listed in the *Operator's Manual* can result in claims for warranty being denied.
- Product failures which result from operating the Product in an abusive, negligent, or reckless manner.
- Parts subject to consumption through use unless found to be defective. Examples of parts which are consumed, or used up, during normal Product operation include, but are not limited to, brake pads and linings, clutch linings, blades, reels, rollers and bearings (sealed or greasable), bed knives, spark plugs, castor wheels and bearings, tires, filters, belts, and certain sprayer components such as diaphragms, nozzles, and check valves, etc.
- Failures caused by outside influence. Conditions considered to be outside influence include, but are not limited to, weather, storage practices, contamination, use of unapproved fuels, coolants, lubricants, additives, fertilizers, water, or chemicals, etc.
- Failure or performance issues due to the use of fuels (e.g. gasoline, diesel, or biodiesel) that do not conform to their respective industry standards.
- Normal noise, vibration, wear and tear, and deterioration.
- Normal "wear and tear" includes, but is not limited to, damage to seats due to wear or abrasion, worn painted surfaces, scratched decals or windows, etc.

Parts

Parts scheduled for replacement as required maintenance are warranted for the period of time up to the scheduled replacement time for that part. Parts replaced under this warranty are covered for the duration of the original product warranty and become the property of Toro. Toro will make the final decision whether to repair any existing part or assembly or replace it. Toro may use remanufactured parts for warranty repairs.

Deep Cycle and Lithium-Ion Battery Warranty:

Deep cycle and Lithium-Ion batteries have a specified total number of kilowatt-hours they can deliver during their lifetime. Operating, recharging, and maintenance techniques can extend or reduce total battery life. As the batteries in this product are consumed, the amount of useful work between charging intervals will slowly decrease until the battery is completely worn out. Replacement of worn out batteries, due to normal consumption, is the responsibility of the product owner. Battery replacement may be required during the normal product warranty period at owner's expense. Note: (Lithium-Ion battery only): A Lithium-Ion battery has a part only prorated warranty beginning year 3 through year 5 based on the time in service and kilowatt hours used. Refer to the *Operator's Manual* for additional information.

Maintenance is at Owner's Expense

Engine tune-up, lubrication, cleaning and polishing, replacement of filters, coolant, and completing recommended maintenance are some of the normal services Toro products require that are at the owner's expense.

General Conditions

Repair by an Authorized Toro Distributor or Dealer is your sole remedy under this warranty.

Neither The Toro Company nor Toro Warranty Company is liable for indirect, incidental or consequential damages in connection with the use of the Toro Products covered by this warranty, including any cost or expense of providing substitute equipment or service during reasonable periods of malfunction or non-use pending completion of repairs under this warranty. Except for the Emissions warranty referenced below, if applicable, there is no other express warranty. All implied warranties of merchantability and fitness for use are limited to the duration of this express warranty.

Some states do not allow exclusions of incidental or consequential damages, or limitations on how long an implied warranty lasts, so the above exclusions and limitations may not apply to you. This warranty gives you specific legal rights, and you may also have other rights which vary from state to state.

Note regarding engine warranty:

The Emissions Control System on your Product may be covered by a separate warranty meeting requirements established by the U.S. Environmental Protection Agency (EPA) and/or the California Air Resources Board (CARB). The hour limitations set forth above do not apply to the Emissions Control System Warranty. Refer to the Engine Emission Control Warranty Statement supplied with your product or contained in the engine manufacturer's documentation for details

Countries Other than the United States or Canada

Customers who have purchased Toro products exported from the United States or Canada should contact their Toro Distributor (Dealer) to obtain guarantee policies for your country, province, or state. If for any reason you are dissatisfied with your Distributor's service or have difficulty obtaining guarantee information, contact the Toro importer.

374-0253 Rev D