Form No. 3424-551 Rev A

TORO®

Count on it.

Operator's Manual

Groundsmaster® 4300-D Rotary Mower

Model No. 30853—Serial No. 403293900 and Up

Register at www.Toro.com.
Original Instructions (EN)

CE

3424-551 A

This product complies with all relevant European directives; for details, please see the separate product specific Declaration of Conformity (DOC) sheet.

It is a violation of California Public Resource Code Section 4442 or 4443 to use or operate the engine on any forest-covered, brush-covered, or grass-covered land unless the engine is equipped with a spark arrester, as defined in Section 4442, maintained in effective working order or the engine is constructed, equipped, and maintained for the prevention of fire.

The enclosed engine owner's manual is supplied for information regarding the US Environmental Protection Agency (EPA) and the California Emission Control Regulation of emission systems, maintenance, and warranty. Replacements may be ordered through the engine manufacturer.

⚠ WARNING

CALIFORNIA
Proposition 65 Warning

Diesel engine exhaust and some of its constituents are known to the State of California to cause cancer, birth defects, and other reproductive harm.

Battery posts, terminals, and related accessories contain lead and lead compounds, chemicals known to the State of California to cause cancer and reproductive harm. Wash hands after handling.

Use of this product may cause exposure to chemicals known to the State of California to cause cancer, birth defects, or other reproductive harm.

on safe operating practices, including safety tips and training materials, go to www.Toro.com.

You many contact Toro directly at www.Toro.com for product safety and operation training materials, accessory information, help finding a dealer, or to register your product.

Whenever you need service, genuine Toro parts, or additional information, contact an Authorized Service Dealer or Toro Customer Service and have the model and serial numbers of your product ready. The model and serial numbers are on a plate mounted on the left side of the frame under the footrest. Write the numbers in the space provided.

Model No. _____

Serial No. _____

This manual identifies potential hazards and has safety messages identified by the safety-alert symbol (Figure 1), which signals a hazard that may cause serious injury or death if you do not follow the recommended precautions.



g000502

Figure 1

1. Safety-alert symbol

This manual uses 2 words to highlight information. **Important** calls attention to special mechanical information and **Note** emphasizes general information worthy of special attention.

Introduction

This machine is a ride-on, rotary-blade lawn mower intended to be used by professional, hired operators in commercial applications. It is primarily designed for cutting grass on well-maintained lawns in parks, sports fields, and on commercial grounds.

Important: **To maximize the safety, performance, and proper operation of this machine, carefully read and fully understand the contents of this *Operator's Manual*. Failing to follow these operating instructions or to receive proper training may result in injury. For more information**

© 2018—The Toro® Company
8111 Lyndale Avenue South
Bloomington, MN 55420

Contact us at www.Toro.com.
Printed in the USA
All Rights Reserved

Contents

Safety 4
General Safety 4
Safety and Instructional Decals 5
Setup 10
1 Adjusting the Control Arm Position 11
2 Removing the Shipping Blocks and Pins 11
3 Installing the Rear Weights 12
4 Installing the Hood Latch 13
5 Installing the Throttle Stop 14
6 Adjusting the Carrier Frame 14
7 Adjusting the Roller Scraper 15
8 Installing the Mulching Baffle 16
9 Preparing the Machine 16
Product Overview 17
Controls 17
Specifications 23
Cutting Unit Specifications 24
Attachments/Accessories 24
Before Operation 25
Before Operation Safety 25
Adding Fuel 25
Checking the Engine-Oil Level 26
Checking the Cooling System 26
Checking the Hydraulic System 26
Draining the Water Separator 26
Checking the Tire Pressure 26
Checking the Torque of the Wheel-Lug Nuts 26
Adjusting the Height of Cut 27
Burnishing the Brakes 27
Bleeding the Fuel System 28
Checking the Safety-Interlock Switches 29
Checking the Blade Stopping Time 29
Selecting a Blade 29
Understanding the Diagnostic Light 30
Changing the Counterbalance Settings 30
Choosing Accessories 31
During Operation 32
During Operation Safety 32
Starting the Engine 33
Shutting Off the Engine 33
Operating Tips 33
After Operation 34
After Operation Safety 34
Identifying the Tie-Down Points 34
Hauling the Machine 35
Pushing or Towing the Machine 35
Maintenance 36
Recommended Maintenance Schedule(s) 36
Daily Maintenance Checklist 37
Pre-Maintenance Procedures 38
Maintenance Safety 38
Raising the Machine 38
Lubrication 39
Greasing the Bearings and Bushings 39
Engine Maintenance 41
Engine Safety 41
Servicing the Air Cleaner 41
Servicing the Engine Oil 42
Fuel System Maintenance 43
Servicing the Fuel System 43
Servicing the Water Separator 44
Servicing the Fuel-Pickup Tube 44
Bleeding Air from the Fuel Injectors 44
Electrical System Maintenance 45
Electrical System Safety 45
Servicing the Battery 45
Locating the Fuses 45
Charging the Battery 46
Drive System Maintenance 46
Adjusting the Traction Drive for Neutral 46
Adjusting the Rear Wheel Toe-in 47
Cooling System Maintenance 47
Cooling System Safety 47
Checking the Cooling System 47
Removing Debris from the Cooling System 48
Brake Maintenance 49
Adjusting the Parking Brakes 49
Adjusting the Parking-Brake Latch 50
Belt Maintenance 50
Tensioning the Alternator Belt 50
Hydraulic System Maintenance 51
Hydraulic System Safety 51
Checking the Hydraulic-Fluid Level 51
Changing the Hydraulic Fluid 52
Replacing the Hydraulic Filters 53
Checking the Hydraulic Lines and Hoses 54
Testing the Hydraulic-System Pressure 54
Hydraulic Valve Solenoid Functions 54
Cutting Unit Maintenance 54
Separating the Cutting Unit from the Traction Unit 54
Mounting the Cutting Units to the Traction Unit 55
Servicing the Front Roller 55
Blade Maintenance 56
Blade Safety 56
Servicing the Blade Plane 56
Removing and Installing a Blade 57
Inspecting and Sharpening the Blade 57
Storage 58
Preparing the Machine for Storage 58
Storing the Cutting Units 59

Safety

This machine has been designed in accordance with EN ISO 5395:2013 and ANSI B71.4-2017.

General Safety

This product is capable of amputating hands and feet and of throwing objects. Always follow all safety instructions to avoid serious personal injury.

Using this product for purposes other than its intended use could prove dangerous to you and bystanders.

- Read and understand the contents of this *Operator's Manual* before starting the engine.
- Use your full attention while operating the machine. Do not engage in any activity that causes distractions; otherwise, injury or property damage may occur.
- Do not put your hands or feet near moving components of the machine.
- Do not operate the machine without all guards and other safety protective devices in place and working on the machine.
- Keep clear of any discharge opening. Keep bystanders and pets a safe distance away from the machine.
- Keep children out of the operating area. Never allow children to operate the machine.
- Stop the machine, shut off the engine, remove the key, and wait for all moving parts to stop before servicing, fueling, or unclogging the machine.

Improperly using or maintaining this machine can result in injury. To reduce the potential for injury, comply with these safety instructions and always pay attention to the safety-alert symbol ⚠, which means Caution, Warning, or Danger—personal safety instruction. Failure to comply with these instructions may result in personal injury or death.

You can find additional safety information where needed throughout this *Operator's Manual*.

Safety and Instructional Decals

Safety decals and instructions are easily visible and are located near any area of potential danger. Replace any decal that is damaged or missing.

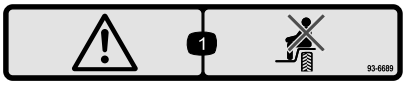

decal93-6689

93–6689

1. Danger—do not sit on the plastic shroud.

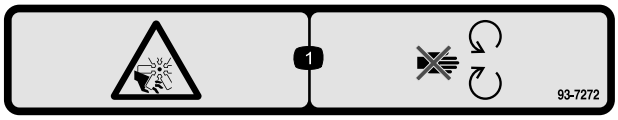

decal93-7272

93-7272

1. Cutting/dismemberment hazard; fan—stay away from moving parts.

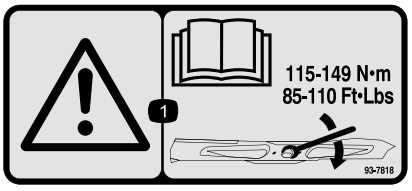

decal93-7818

93-7818

1. Warning—read the *Operator's Manual* for instructions on torquing the blade bolt/nut to 115 to 149 N·m (85 to 110 ft-lb).

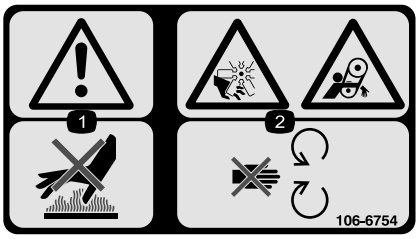

decal106-6754

106-6754

1. Warning—do not touch the hot surface.
2. Cutting/dismemberment hazard, fan and entanglement hazard, belt—stay away from moving parts.



decal106-6755

106-6755

1. Engine coolant under pressure.
2. Explosion hazard—read the *Operator's Manual.*
3. Warning—do not touch the hot surface.
4. Warning—read the *Operator's Manual.*

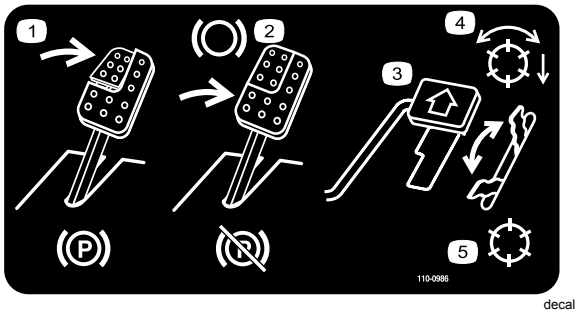

decal110-0986

110-0986

1. Press the brake pedal and parking-brake pedal to engage the parking brake.
2. Press the brake pedal to apply the brake.
3. Press the traction pedal to move the machine forward.
4. PTO enabled mode
5. Transport mode (No PTO)

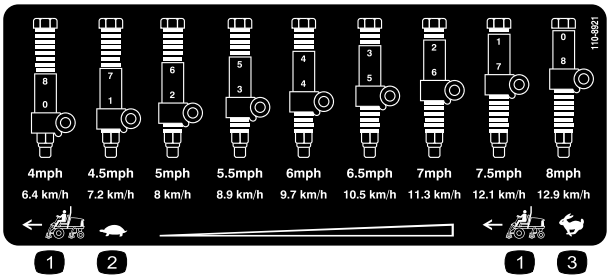

decal110-8921

110-8921

1. Traction unit speed
2. Slow
3. Fast

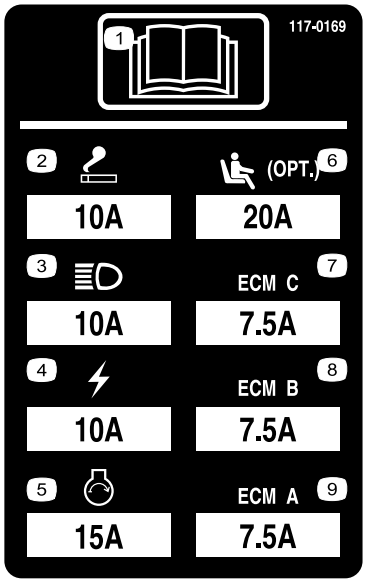

decal117-0169

117-0169

1. Read the *Operator's Manual.*
2. Power point (10 A)
3. Head lights (10 A)
4. Power (10 A)
5. Engine start (15 A)
6. Optional air ride seat suspension (20 A)
7. Engine computer management C (7.5 A)
8. Engine computer management B (7.5 A)
9. Engine computer management A (7.5 A)

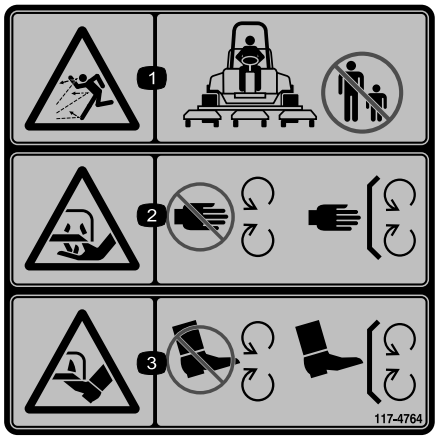

decal117-4764

117-4764

1. Thrown object hazard—keep bystanders a safe distance away from the machine.
2. Cutting hazard of hand, mower blade—stay away from moving parts, keep all guards and shields in place.
3. Cutting hazard of foot, mower blade—stay away from moving parts, keep all guards and shields in place.

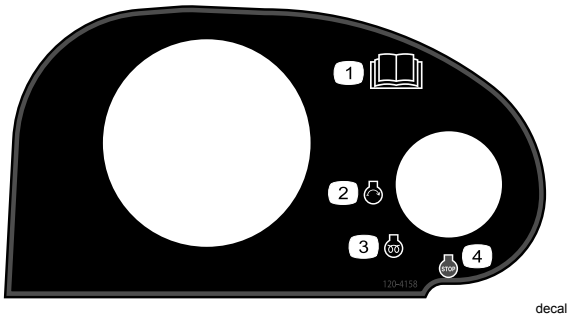

decal120-4158

120–4158

1. Read the *Operator's Manual*.
2. Engine—start
3. Engine—preheat
4. Engine—stop

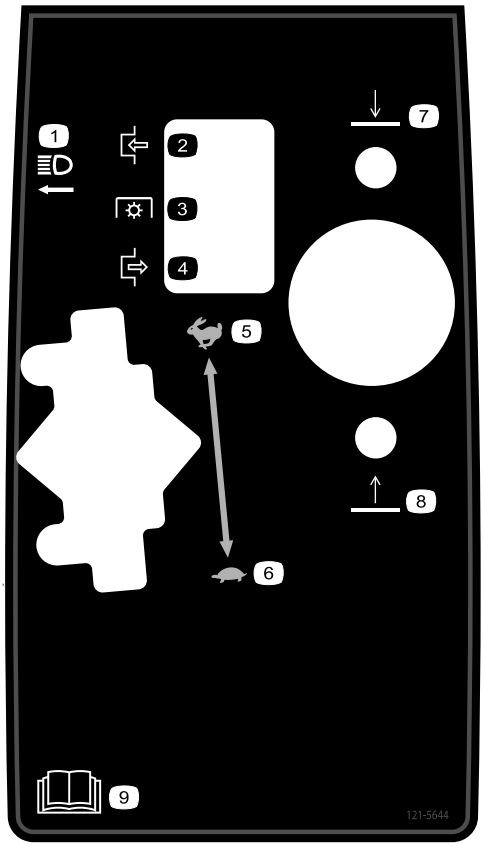

decal121-5644

121–5644

1. Light switch
2. Engage
3. Power take-off
4. Disengage
5. Fast
6. Slow
7. Lower
8. Raise
9. Read the *Operator's Manual*.



decal133-8062

133-8062



decalbatterysymbols

Battery Symbols

Some or all of these symbols are on your battery

1. Explosion hazard
2. No fire, open flame, or smoking
3. Caustic liquid/chemical burn hazard
4. Wear eye protection.
5. Read the *Operator's Manual.*
6. Keep bystanders a safe distance away from the battery.
7. Wear eye protection; explosive gases can cause blindness and other injuries.
8. Battery acid can cause blindness or severe burns.
9. Flush eyes immediately with water and get medical help fast.
10. Contains lead; do not discard

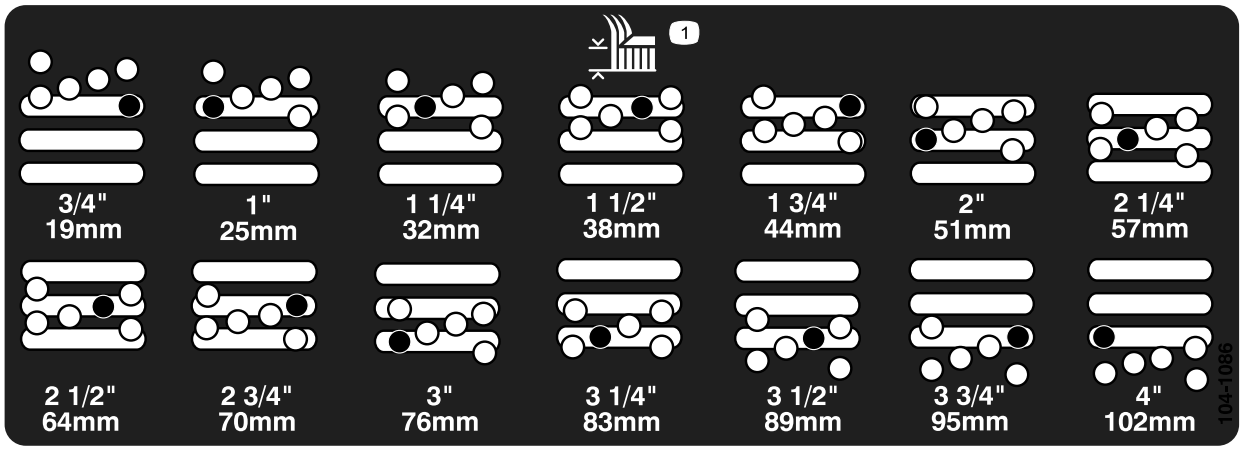

decal104-1086

104-1086

1. Height of cut

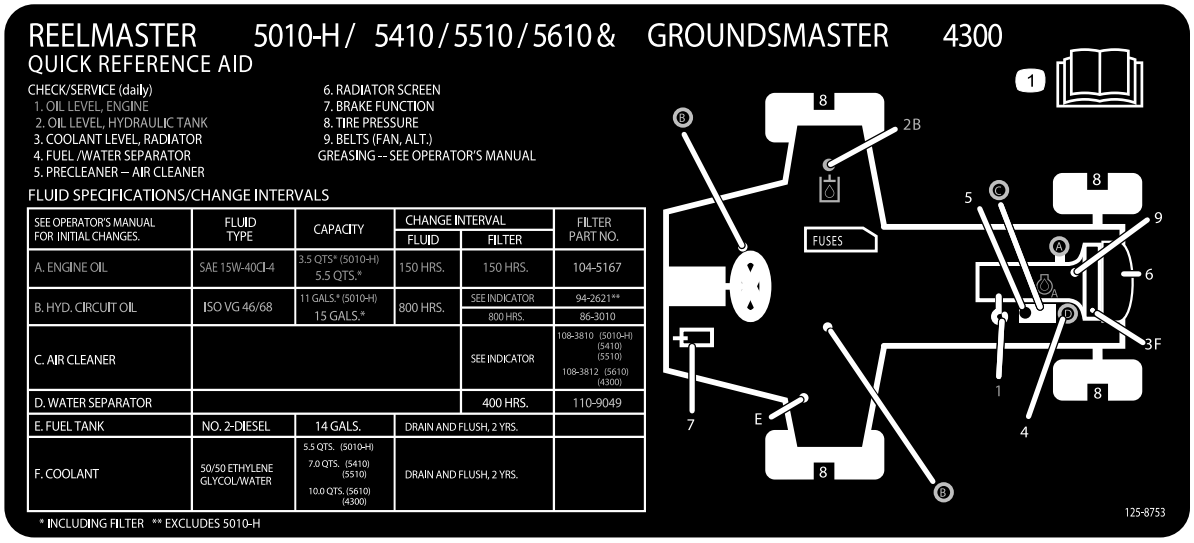

decal125-8753

125-8753

1. Read the *Operator's Manual* for more maintenance information.



decal133-2930

133-2930

1. Warning—read the *Operator's Manual*; do not operate this machine unless you are trained.
2. Warning—wear hearing protection.
3. Thrown object hazard—keep bystanders a safe distance away from the machine.
4. Tipping hazard—slow the machine before turning; do not turn at high speeds; only drive on slopes with the cutting units lowered; always wear a seatbelt.
5. Warning—do not park on slopes; lock the parking brake, stop the engine and remove the ignition key before leaving the machine.
6. Warning—read the *Operator's Manual*; do not tow the machine.



decal133-2931

133-2931

Note: This machine complies with the industry standard stability test in the static lateral and longitudinal tests with the maximum recommended slope indicated on the decal. The operator must review the instructions for operating the machine on slopes in the *Operator's Manual* and review the conditions in which the machine is being operated to determine whether the machine can be operated in the conditions on that day and at that site. Changes in the terrain can result in a change in slope operation for the machine. If possible, keep the mower deck lowered to the ground while operating the machine on slopes. Raising the mower deck while operating on slopes can cause the machine to become unstable.

1. Warning—read the *Operator's Manual*; do not operate this machine unless you are trained.
2. Warning—wear hearing protection.
3. Thrown object hazard—keep bystanders away.
4. Tipping hazard—do not drive across or down slopes greater than 15°; only drive on slopes with the cutting units lowered; always wear a seatbelt.
5. Warning—do not park on slopes; engage the parking brake, lower the cutting units, shut off the engine, and remove the ignition key before leaving the machine.
6. Warning—read the *Operator's Manual*; do not tow the machine.

Setup

Loose Parts

Use the chart below to verify that all parts have been shipped.

Procedure	Description	Qty.	Use
1	No parts required	–	Adjust the control arm position.
2	No parts required	–	Remove shipping blocks and pins.
3	Rear weights (quantity varies with configuration).	Varies	Install the rear weights (for ANSI or CE compliance).
4	Hood-latch assembly Washer	1 1	Install the hood latch (for CE compliance).
5	Throttle stop Set screw	1 1	Install the throttle stop (for CE compliance).
6	No parts required	–	Adjust the carrier frame.
7	No parts required	–	Adjust the roller scraper (optional).
8	No parts required	–	Install the mulching baffle (optional).
9	No parts required	–	Prepare the machine.

Media and Additional Parts

Description	Qty.	Use
Operator's Manual	1	
Engine owner's manual	1	
Declaration of Conformity	1	

Note: Determine the left and right sides of the machine from the normal operating position.

1

Adjusting the Control Arm Position

No Parts Required

Procedure

The control arm position can be adjusted for your comfort.

1. Loosen the 2 bolts securing the control arm to the retaining bracket (Figure 2).

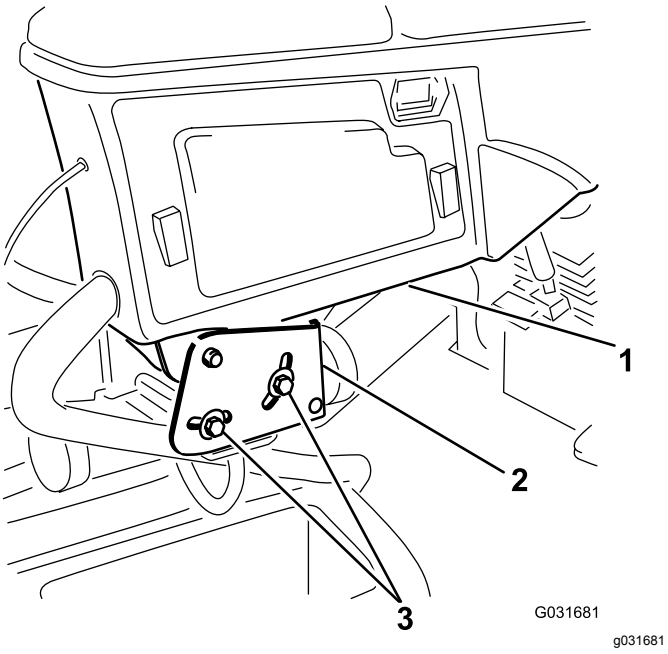

Figure 2

1. Control arm
2. Retaining brackets
3. Bolts (2)

2. Rotate the control arm to the desired position and tighten the 2 bolts.

2

Removing the Shipping Blocks and Pins

No Parts Required

Procedure

1. Remove and discard the shipping blocks from the cutting units.
2. Remove and discard the shipping pins from the cutting-unit suspension arms.

   Note: The shipping pins stabilize the cutting units during shipping; remove them before operating the machine.

3

Installing the Rear Weights

For ANSI or CE Compliance

Parts needed for this procedure:

Varies	Rear weights (quantity varies with configuration).

Procedure

The Groundsmaster 4300-D Traction Unit complies with EN ISO 5395:2013 and ANSI B71.4-2017 standards when equipped with rear weights and/or 40.8 kg (90 lb) of calcium chloride ballast that is added to the rear wheels. Use the following charts to determine the combinations of weights required for your configuration. Contact your authorized Toro distributor for the appropriate parts needed for your machine.

Weight Part Number: 110-8985-03				
Configuration	**Number of weights to meet ANSI (US) standards**	**Number of weights to meet CE (European) standards**	**Fasteners (2 each required) for weights**	**Weight Location**
Base Unit	6	0	Carriage Bolt (3231-34) Nut (104-8301)	3 on top of bumper and 3 under bumper
With Recycler Kit	40.8 kg (90 lb) calcium chloride*	0	N/A	N/A
With Sunshade	40.8 kg (90 lb) calcium chloride*	4	Carriage Bolt (3231-34) Nut (104-8301)	1 on top of bumper and 3 under bumper
With 4 Post ROPS and Sunshade	40.8 kg (90 lb) calcium chloride*	4	Carriage Bolt (3231-34) Nut (104-8301)	1 on top of bumper and 3 under bumper
* Install tubes inside the rear tires before adding calcium chloride.				

Important: **Always install the tubes inside the rear tires before you add the calcium chloride. If a puncture occurs in a tire with calcium chloride, remove the machine from the turf area as quickly as possible. To prevent possible damage to the turf, immediately soak the affected area with water.**

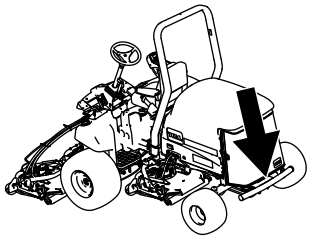

g194425

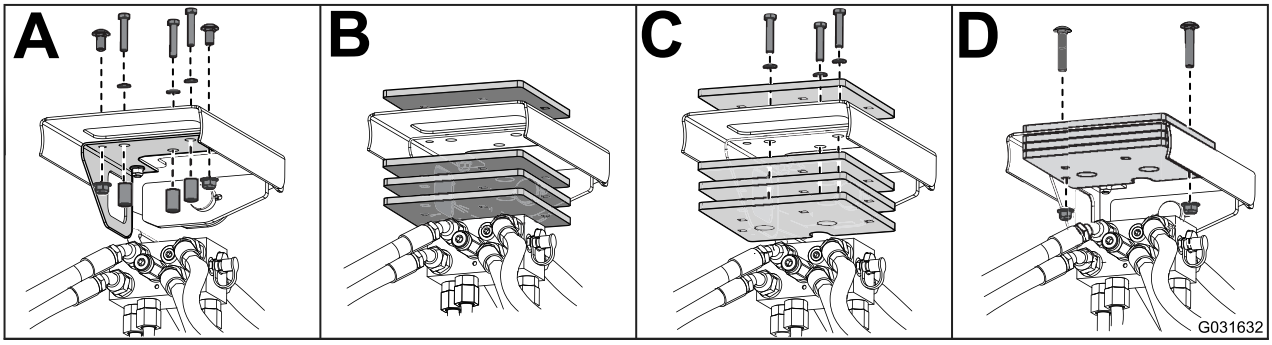

g031632

Figure 3

4

Installing the Hood Latch

For CE Compliance

Parts needed for this procedure:

1	Hood-latch assembly
1	Washer

Procedure

1. Unlatch and raise the hood.
2. Remove the rubber grommet from the hole in the left side of the hood (Figure 4).

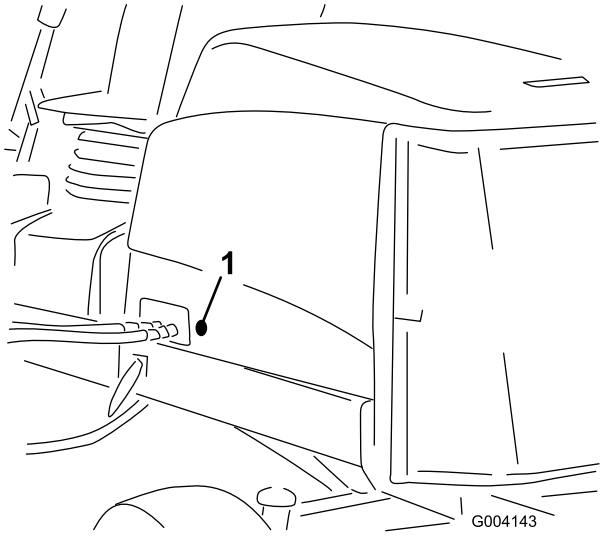

g004143

Figure 4

1. Rubber grommet

3. Remove the nut from the hood-latch assembly (Figure 5).

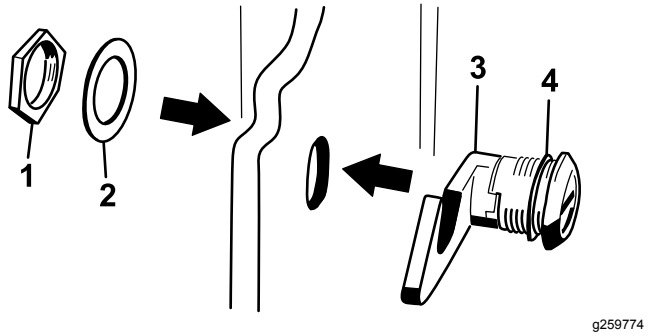

Figure 5

1. Nut
2. Metal washer
3. Hood latch
4. Rubber washer

4. On the outside of the hood, insert the hook end of the latch through the hole in the hood and ensure that the rubber-sealing washer remains to the outer side of the hood (Figure 5).
5. On the inside of the hood, insert the metal washer onto the latch, secure the latch with the nut, and ensure that the latch engages the frame catch when it is locked.

   Note: Use the enclosed hood-latch key to operate the hood latch.

5

Installing the Throttle Stop

For CE Compliance

Parts needed for this procedure:

1	Throttle stop
1	Set screw

Procedure

1. Loosen the set screw on the throttle stop (Figure 6).
2. Slide the throttle stop onto the high-idle stop screw (Figure 6). The chamfered end of the throttle stop is to be positioned outward.

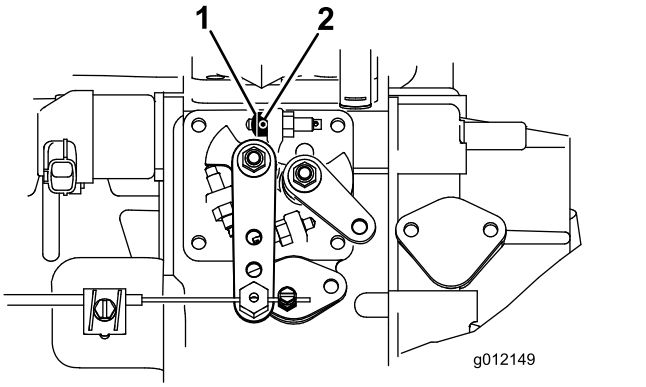

g012149

Figure 6

1. Throttle stop
2. Set screw

3. Turn the key in the switch to the ON position and allow the engine to run for 5 to 10 minutes.
4. Adjust the high idle to 2,860 rpm with the cutting units disengaged.
5. Tighten the set screw.
6. Apply adhesive into the set screw to prevent tampering.

6

Adjusting the Carrier Frame

No Parts Required

Adjusting the Front Cutting Units

The front and rear cutting units require different mounting positions. The front cutting unit has 2 mounting positions depending on what height of cut and degree of cutting unit rotation you desire.

- For heights of cut between 2.0 to 7.6 cm (0.75 to 3 inches), mount the front carrier frames in the lower front mounting holes (Figure 7).

  Note: This position allows more forward positioning of the cutting units relative to the traction unit when approaching quick uphill changes in terrain. It does however limit the clearance of the chamber to the carrier when cresting sharp knolls.

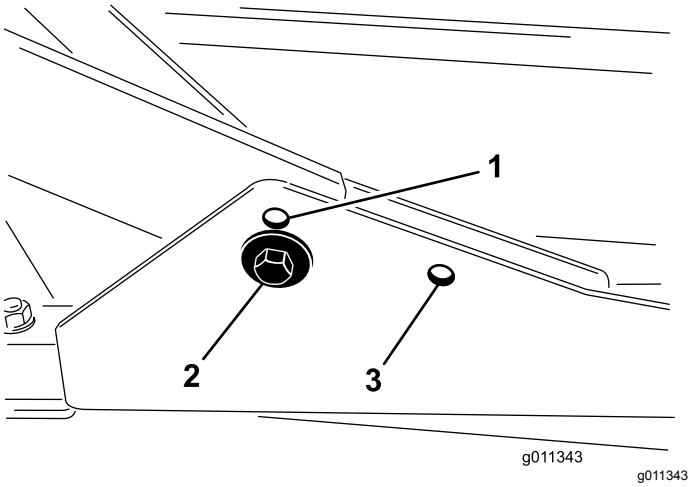

Figure 7

1. Front-cutting-unit mounting hole (upper)
2. Front-cutting-unit mounting hole (lower)
3. Rear-cutting-unit mounting hole

- For heights of cut between 6.3 to 10 cm (2.5 to 4 inches), mount the front carrier frames in the upper front mounting holes (Figure 7).

  Note: This increases the chamber to carrier clearance due to the higher position of the cutting chamber, but will cause the cutting units to reach their maximum forward travel sooner.

Adjusting the Rear Cutting Units

The front and rear cutting units require different mounting positions. The rear cutting unit has 1 mounting position for proper alignment with the sidewinder under frame.

For all heights of cut, mount the rear cutting unit in the rear-mounting holes (Figure 7).

7

Adjusting the Roller Scraper

Optional

No Parts Required

Procedure

The optional rear roller scraper functions best when there is an even gap of 0.5 to 1 mm (0.02 to 0.04 inch) between the scraper and the roller.

1. Loosen the grease fitting and the mounting screw (Figure 8).

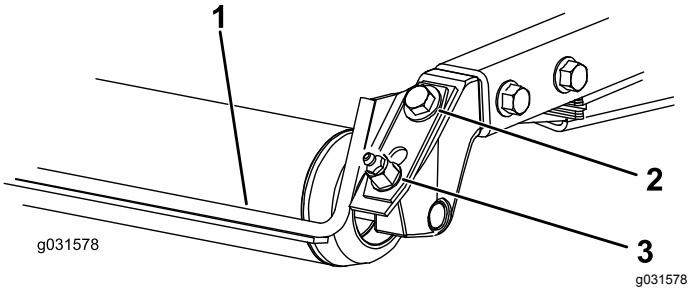

Figure 8

1. Roller scraper
2. Mounting screw
3. Grease fitting

2. Slide the scraper up or down until you obtain a gap of 0.5 to 1 mm (0.02 to 0.04 inch) between the rod and the roller.
3. Tighten the grease fitting and screw to 41 N·m (30 ft-lb) in an alternating sequence.

8

Installing the Mulching Baffle

Optional

No Parts Required

Procedure

1. Thoroughly clean debris from the mounting holes on the rear wall and left wall of the chamber.
2. Install the mulching baffle in the rear opening and secure it with 5 flange-head bolts (Figure 9).

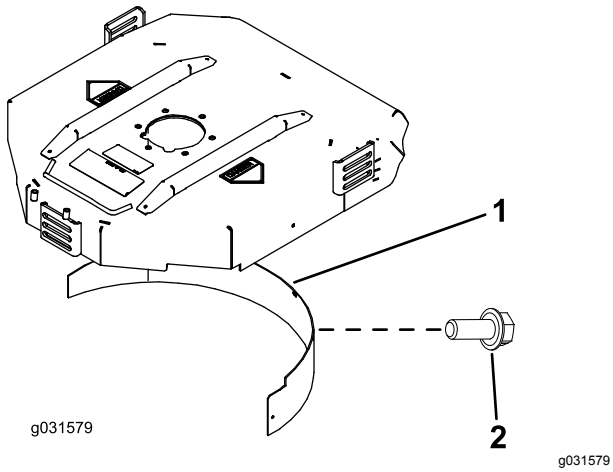

Figure 9

1. Mulching baffle
2. Flange-head bolt

3. Verify that the mulching baffle does not interfere with the tip of the blade and does not protrude inside the surface of the rear chamber wall.

⚠ DANGER

Using the high-lift blade with the mulching baffle could cause the blade to break, resulting in personal injury or death.

Do not use the high-lift blade with the baffle.

9

Preparing the Machine

No Parts Required

Checking the Tire Pressure

Check the tire pressure before use; refer to Checking the Tire Pressure (page 26).

Important: **Maintain pressure in all tires to ensure a good quality-of-cut and proper machine performance. *Do not underinflate the tires.***

Checking the Fluid Levels

1. Check the engine-oil level before starting the engine; refer to Checking the Engine-Oil Level (page 42).
2. Check the hydraulic-fluid level before starting the engine; refer to Checking the Hydraulic-Fluid Level (page 51).
3. Check the cooling system before starting the engine; refer to Checking the Cooling System (page 47).

Greasing the Machine

Grease the machine before use; refer to Greasing the Bearings and Bushings (page 39). Failure to properly grease the machine results in premature failure of critical parts.

Product Overview

Controls

Traction Pedal

The traction pedal (Figure 10) controls the forward and reverse operation. Press the top of the pedal to move forward and the bottom to move rearward. Ground speed depends on how far you press the pedal. For no load, maximum ground speed, fully press the pedal while the throttle is in the FAST position.

To stop, reduce foot pressure on the traction pedal and allow it to return to the center position.

Mow-Speed Limiter

When the mow-speed limiter (Figure 10) is flipped up it will control the mow speed and allow the cutting decks to be engaged. Each spacer adjusts the mowing speed by 0.8 km/h (0.5 mph). The more spacers you have on the top of the bolt, the slower you will go. For transport, flip back the mow speed limiter for maximum-transport speed.

Brake Pedal

Press the brake pedal (Figure 10) to stop the machine.

Parking Brake

To engage the parking brake, (Figure 10) push down the brake pedal and press the top forward to latch. To disengage the parking brake, press the brake pedal until the parking-brake latch retracts.

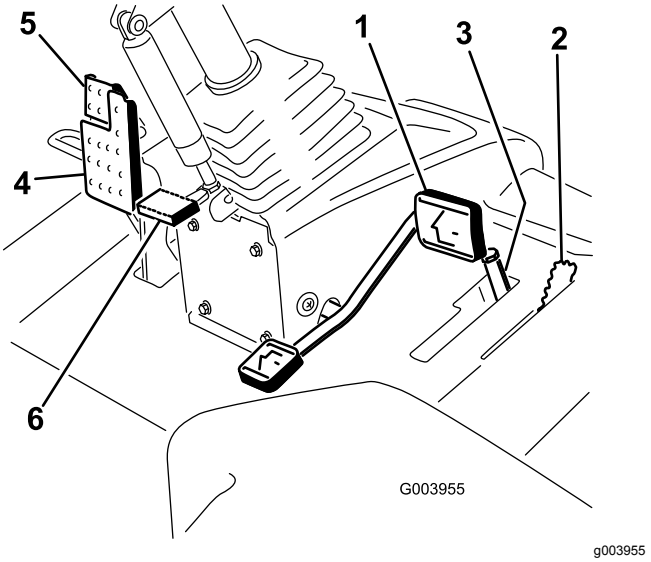

Figure 10

1. Traction pedal
2. Mow-speed limiter
3. Spacers
4. Brake pedal
5. Parking brake
6. Tilt-steering pedal

Tilt-Steering Pedal

To tilt the steering wheel toward you, press the foot pedal down, pull the steering tower toward you to the most comfortable position, and release the pedal (Figure 10). To move the steering wheel away from you, press the foot pedal and release it when the steering wheel reaches the desired operating position.

Headlight Switch

Pivot the switch downward to turn on the headlights (Figure 11).

Throttle Control

Move the throttle control (Figure 11) forward to increase the engine speed and backward to decrease speed.

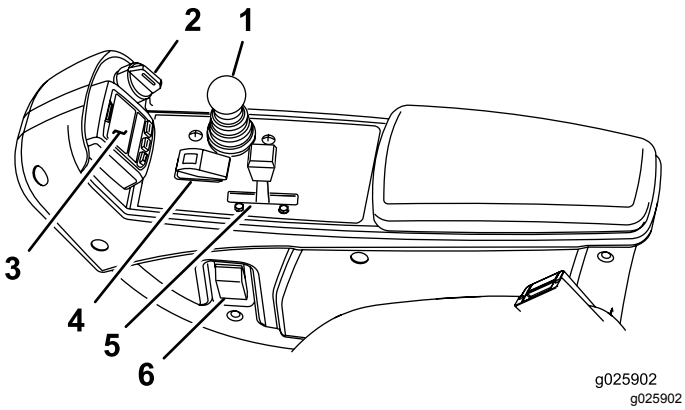

Figure 11

1. Lower mow/raise control lever
2. Key switch
3. InfoCenter
4. Enable/disable switch
5. Throttle control
6. Headlight switch

Key Switch

The key switch (Figure 11) has 3 positions: OFF, ON/PREHEAT, and START.

Lower Mow/Raise Control Lever

The lower mow/raise control lever (Figure 11) raises and lowers the cutting units and also starts and stops the mowers when the mowers are enabled in the mow mode. When starting the cutting units in the down position, this lever will turn the cutting units on if the PTO and the mow speed limiter are engaged.

Enable/Disable Switch

Use the enable/disable switch (Figure 11) in conjunction with the lower mow/raise control lever to operate the mowers. The mowers cannot be lowered when the mow/transport lever is in the TRANSPORT position.

Hydraulic-Filter-Restriction Indicator

The hydraulic-filter-restriction indicator alerts you when the hydraulic filters must be changed; refer to Replacing the Hydraulic Filters (page 53).

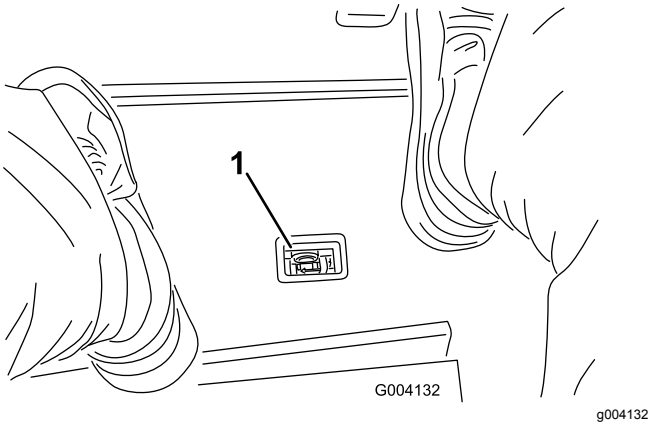

Figure 12

1. Hydraulic-filter-restriction indicator

Power Point

The power point (Figure 13) is a 12 V power supply for electronic devices.

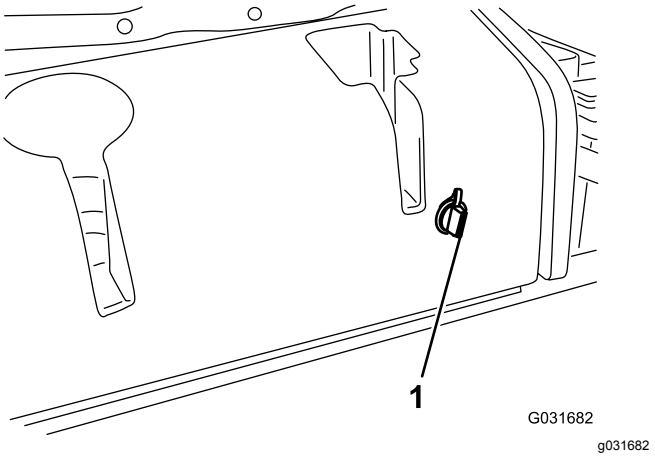

Figure 13

1. Power point

Seat-Adjustment Controls

Refer to Figure 14 for an illustration of the seat-adjustment controls.

- The seat-adjustment lever allows you to adjust the seat forward and rearward.
- The weight-adjusting knob adjusts the seat for your weight.
- The weight gauge indicates when the seat is adjusted to your weight.
- The height-adjusting knob adjusts the seat for your height.

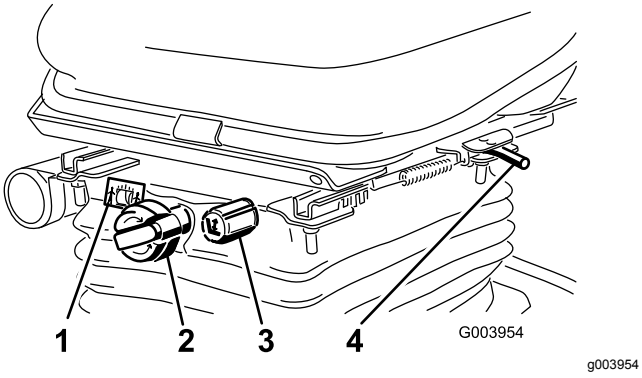

Figure 14

1. Weight gauge
2. Weight-adjusting knob
3. Height-adjusting knob
4. Seat-adjustment lever (forward and rearward)

Using the InfoCenter LCD Display

The InfoCenter LCD display shows the operating status, various diagnostics, and other information about the machine (Figure 15). There is a splash screen and main information screen in the InfoCenter. Press any of the InfoCenter buttons and then select the appropriate directional arrow to switch between the splash screen and the main information screen.

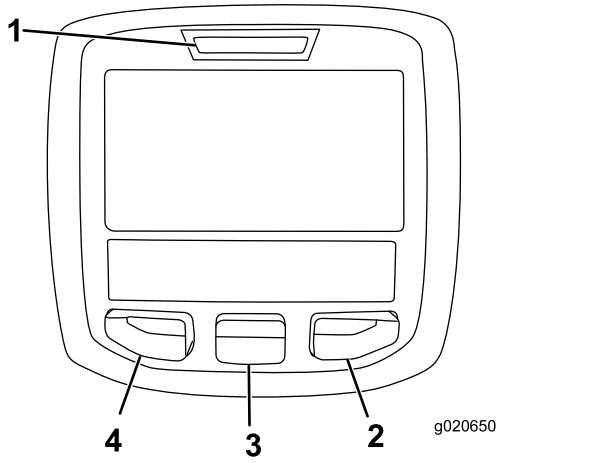

Figure 15

1. Indicator light
2. Right button
3. Middle button
4. Left button

- Left Button, Menu Access/Back Button—press to access the InfoCenter menus. You can use it to back out of any menu you are currently using.
- Middle Button—press to scroll down menus.
- Right Button—press to open a menu where a right arrow indicates additional content.

Note: The purpose of each button may change depending on what is required at the time. Each button is labeled with an icon displaying its current function.

InfoCenter Icon Description

SERVICE DUE	Indicates when scheduled service should be performed
	Hour meter
	Info icon
	Fast
	Slow
	Fuel level
	The glow plugs are active
	Raise the cutting units
	Lower the cutting units
	Sit in the seat.
	The parking brake is engaged
H	The range is high (Transport)
N	Neutral
L	The range is low (Mow)
	Coolant Temperature (°C or °F)
	Temperature (hot)
	The PTO is engaged
	Not allowed
	Start the engine
	Shut off the engine
	Engine
	Key switch

InfoCenter Icon Description (cont'd.)

	Cutting units are lowering
	Cutting units are raising
PIN	PIN passcode
CAN	CAN bus
	InfoCenter
Bad	Bad or failed
	Bulb
OUT	Output of TEC controller or control wire harness
	Switch
	Release the switch
	Change to indicated state.
Symbols are often combined to form sentences. Some examples are shown below	
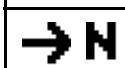	Put machine into neutral.
	Engine start is denied.
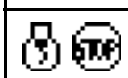	Engine shutdown
	Engine coolant is too hot
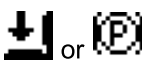	Sit down or engage parking brake

Using the Menus

To access the InfoCenter menu system, press the menu access button while at the main screen. This brings you to the main menu. Refer to the following tables for a synopsis of the options available from the menus:

Main Menu	
Menu Item	**Description**
Faults	Contains a list of the recent machine faults. Refer to the *Service Manual* or your Toro Distributor for more information on the Faults menu and the information contained there.
Service	Contains information on the machine such as hours of use, counters, and other similar numbers.
Diagnostics	Displays the state of each machine switch, sensor, and control output. You can use this to troubleshoot certain issues as it quickly tells you which machine controls are ON and which are OFF.
Settings	Allows you to customize and modify configuration variables on the InfoCenter display.
About	Lists the model number, serial number, and software version of your machine.

Service	
Menu Item	**Description**
Hours	Lists the total number of hours that the machine, engine, and PTO have been on, as well as the number of hours the machine has been transported and service due.
Counts	Lists numerous counts the machine has experienced.

Diagnostics	
Menu Item	**Description**
Cutting Units	Indicates the inputs, qualifiers, and outputs for raising and lowering the cutting units.
Hi/Low Range	Indicates the inputs, qualifiers, and outputs for driving in transport mode.
PTO	Indicates the inputs, qualifiers, and outputs for enabling the PTO circuit.
Engine Run	Indicates the inputs, qualifiers, and outputs for starting the engine.

Settings	
Menu Item	**Description**
Units	Controls the units used on the InfoCenter (English or Metric).
Language	Controls the language used on the InfoCenter*.
LCD Backlight	Controls the brightness of the LCD display.
LCD Contrast	Controls the contrast of the LCD display.
Protected Menus	Allows the superintendant/mechanic to access protected menus by inputting a passcode.
Counterbalance	Controls the amount of counterbalance applied to the cutting decks.

*Only operator-faced text is translated. Faults, Service, and Diagnostics screens are service-faced. Titles appear in the selected language, but menu items are in English.

About	
Menu Item	**Description**
Model	Lists the model number of the machine.
SN	Lists the serial number of the machine.
Machine Controller Revision	Lists the software revision of the master controller.
InfoCenter Revision	Lists the software revision of the InfoCenter.
CAN Bus	Lists the machine communication bus status.

Protected Menus

There is 1 operating configuration setting that is adjustable within the Settings Menu of the InfoCenter: counterbalance. This setting can be locked by using the Protected Menu.

Note: At the time of delivery, the initial password code is programmed by your distributor.

Accessing the Protected Menu Settings

1. From the Main Menu, scroll down to the Settings Menu and press the right button.
2. In the Settings Menu, scroll down to the Protected Menu and press the right button.
3. To enter the passcode, use the center button to set the first digit and then press the right button to move on to the next digit.
4. Use the center button to set the second digit and then press the right button to move on the next digit.
5. Use the center button to set the third digit and then press the right button to move on to the next digit.
6. Use the center button to set the fourth digit and then press the right button.
7. Press the middle button to enter the code.
8. If the code has been accepted and the protected menu has been unlocked, “PIN” will be displayed in the upper right corner of the display screen.

   Note: If you forget or misplace your passcode, contact your Toro Distributor for assistance.

Viewing and Changing the Protected Menu Settings

1. In the Protected Menu, scroll down to Protect Settings.
2. To view and change the settings without entering a passcode, use the right button to change the Protect Settings to OFF.
3. To view and change the settings with a passcode, use the left button to change the Protect Settings to ON, set the passcode, and turn the key in the ignition switch to the OFF position and then to the ON position.

Setting the Counterbalance

1. In the Settings Menu, scroll down to Counterbalance.
2. Press the right button to select counterbalance and change between the low, medium, and high settings.

Specifications

Note: Specifications and design are subject to change without notice.

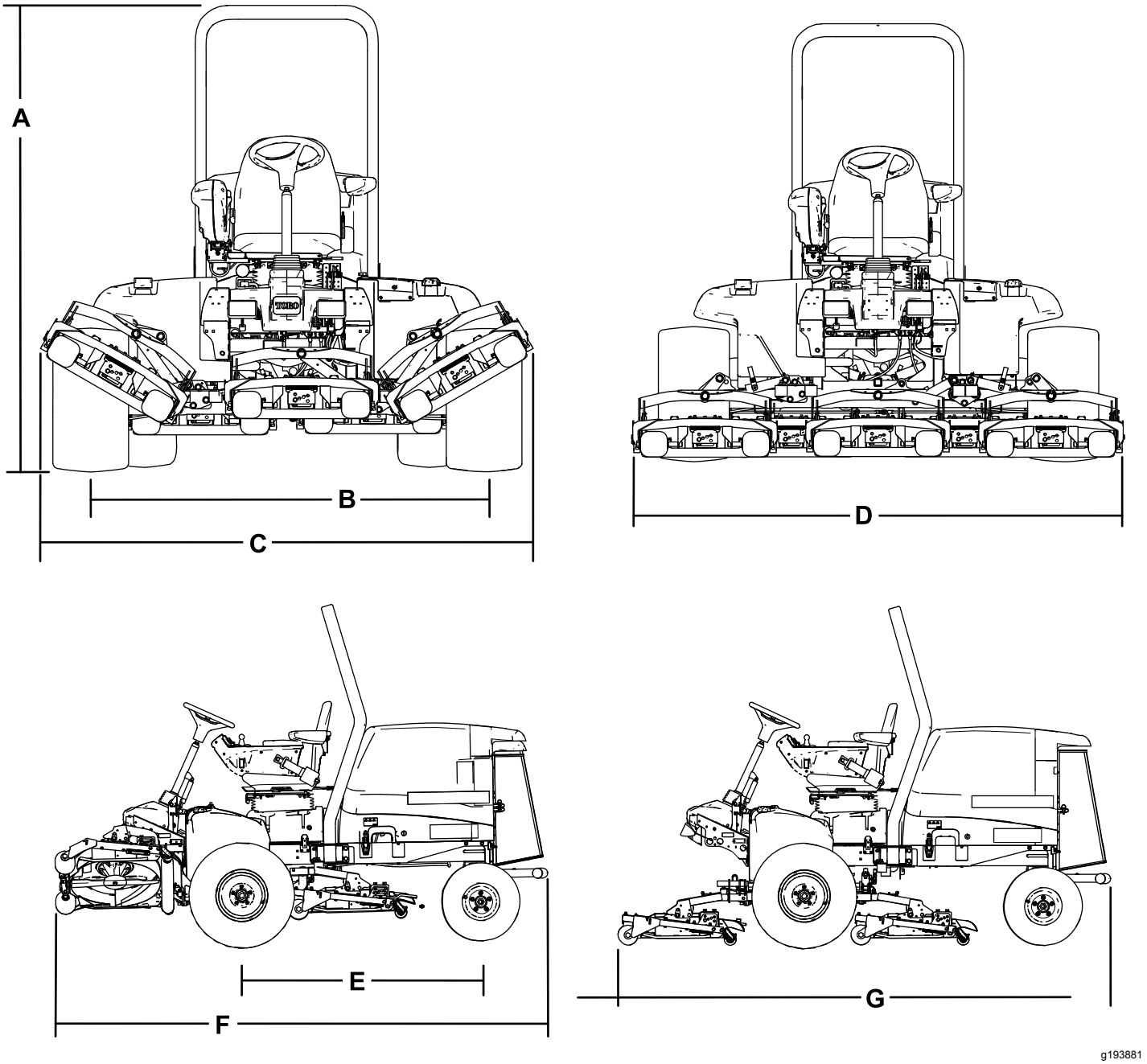

Figure 16

Description	Figure 16 reference	Dimension or Weight
Overall height	A	217.2 cm (85-1/2 inches)
Wheel tread (tire center to center) rear	B	184.5 cm (72.6 inches)
Overall width (transport position)	C	231 cm (91 inches)
Overall width (mowing position)	D	246.5 cm (97 inches)
Wheel base	E	152.4 cm (60 inches)
Overall length (transport position)	F	315 cm (124 inches)
Overall length (mowing position)	G	315 cm (124 inches)
Fuel-tank capacity		53 L (14 US gallons)
Transport speed		0 to 16 km/h (0 to 10 mph)
Mowing speed		0 to 13 km/h (0 to 8 mph)
Net weight (with cutting decks and fluids)		1,412 kg (3,114 lb)

Cutting Unit Specifications

Length	86.4 cm (34 inches)
Width	86.4 cm (34 inches)
Height	24.4 cm (9.6 inches) to carrier mount 26.7 cm (10-1/2 inches) at 3/4 inch height of cut 34.9 cm (13-3/4 inches) at 4 inches height of cut
Weight	88 kg (195 lb)

Attachments/Accessories

A selection of Toro approved attachments and accessories is available for use with the machine to enhance and expand its capabilities. Contact your Authorized Service Dealer or authorized Toro distributor or go to www.Toro.com for a list of all approved attachments and accessories.

To ensure optimum performance and continued safety certification of the machine, use only genuine Toro replacement parts and accessories. Replacement parts and accessories made by other manufacturers could be dangerous, and such use could void the product warranty.

Operation

Note: Determine the left and right sides of the machine from the normal operating position.

Before Operation

Before Operation Safety

General Safety

- Never allow children or untrained people to operate or service the machine. Local regulations may restrict the age of the operator. The owner is responsible for training all operators and mechanics.
- Become familiar with the safe operation of the equipment, operator controls, and safety signs.
- Know how to stop the machine and shut off the engine quickly.
- Check that operator-presence controls, safety switches, and shields are attached and functioning properly. Do not operate the machine unless they are functioning properly.
- Before mowing, always inspect the machine to ensure that the blades, blade bolts, and cutting assemblies are in good working condition. Replace worn or damaged blades and bolts in sets to preserve balance.
- Inspect the area where you will use the machine and remove all objects that the machine could throw.

Fuel Safety

- Use extreme care in handling fuel. It is flammable and its vapors are explosive.
- Extinguish all cigarettes, cigars, pipes, and other sources of ignition.
- Use only an approved fuel container.
- Do not remove the fuel cap or fill the fuel tank while the engine is running or hot.
- Do not add or drain fuel in an enclosed space.
- Do not store the machine or fuel container where there is an open flame, spark, or pilot light, such as on a water heater or other appliance.
- If you spill fuel, do not attempt to start the engine; avoid creating any source of ignition until the fuel vapors have dissipated.

Adding Fuel

Recommended Fuel

Use only clean, fresh diesel fuel with ultra low (<15 ppm) sulfur content meeting ASTM D975 or EN590 specifications. The minimum cetane rating should be 40. Purchase fuel in quantities that can be used within 180 days to ensure that the fuel is fresh.

Use of non-ultra low sulfur fuel will cause damage to the engine emissions system.

Fuel-tank capacity: 53 L (14 US gallons).

Use summer-grade diesel fuel (No. 2-D) at temperatures above -7°C (20°F) and winter grade (No. 1-D or No. 1-D/2-D blend) below that temperature. Using winter-grade fuel at lower temperatures provides lower flash point and cold flow characteristics which eases starting and reduces fuel-filter plugging.

Using summer-grade fuel above -7°C (20°F) contributes toward longer fuel-pump life and increased power compared to winter-grade fuel.

Important: **Do not use kerosene or gasoline instead of diesel fuel. Failure to observe this caution will damage the engine.**

Biodiesel Ready

This machine can also use a biodiesel blended fuel of up to B20 (20% biodiesel, 80% petrodiesel). The petrodiesel portion must be ultra low sulfur. Observe the following precautions:

- The biodiesel portion of the fuel must meet specification ASTM D6751 or EN14214.
- The blended fuel composition should meet ASTM D975 or EN590.
- Painted surfaces may be damaged by biodiesel blends.
- Use B5 (biodiesel content of 5%) or lesser blends in cold weather.
- Monitor seals, hoses, gaskets in contact with fuel as they may be degraded over time.
- Fuel filter plugging may be expected for a time after converting to biodiesel blends.
- Contact your distributor if you wish for more information on biodiesel.

Filling the Fuel Tank

Note: If possible, fill the fuel tank after each use. This minimizes possible buildup of condensation inside the fuel tank.

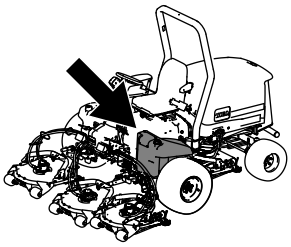

g194207

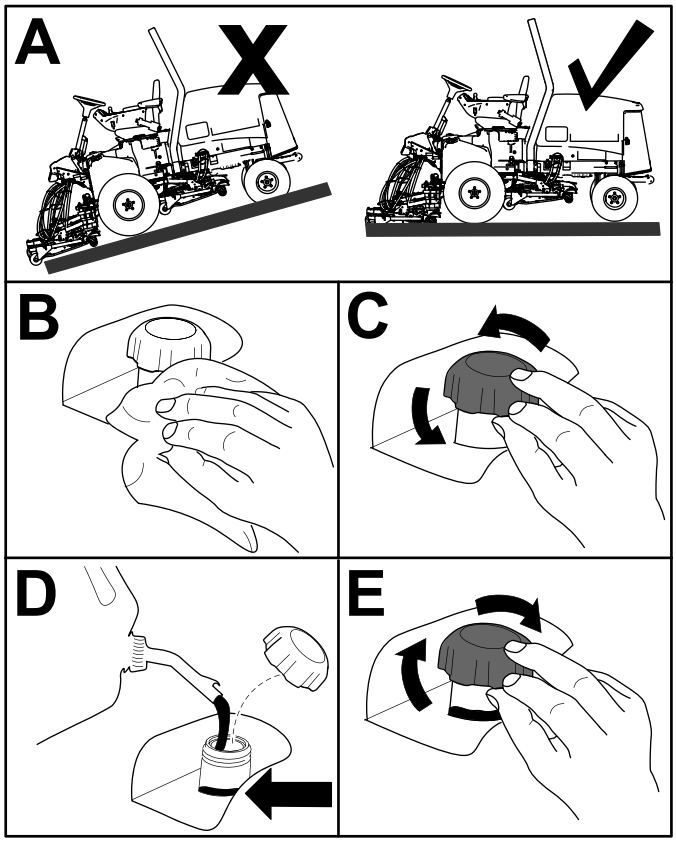

g194206

Figure 17

Note: Fill the tank until the level is 6 to 13 mm (1/4 to 1/2 inch) below the bottom of the filler neck.

Checking the Engine-Oil Level

Before you start the engine and use the machine, check the oil level in the engine crankcase; refer to Checking the Engine-Oil Level (page 42).

Checking the Cooling System

Before you start the engine and use the machine, check the cooling system; refer to Checking the Cooling System (page 26).

Checking the Hydraulic System

Before you start the engine and use the machine, check the hydraulic system; refer to Checking the Hydraulic Lines and Hoses (page 54).

Draining the Water Separator

Drain water or other contaminants from the water separator; refer to Servicing the Water Separator (page 44).

Checking the Tire Pressure

Service Interval: Before each use or daily

The correct air pressure in the front and rear tires is 83 to 103 kPa (12 to 15 psi).

Important: **Maintain pressure in all tires to ensure a good quality of cut and proper machine performance.** ***Do not under-inflate the tires.***

Check the air pressure in all the tires before operating the machine.

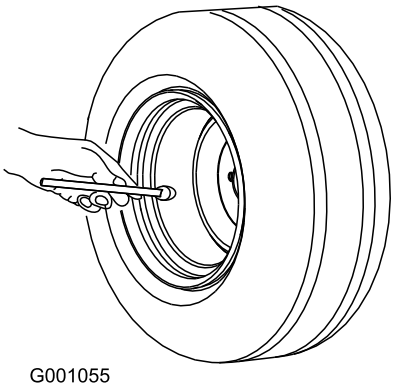

G001055

g001055

Figure 18

Checking the Torque of the Wheel-Lug Nuts

Service Interval: After the first hour

After the first 10 hours

Every 250 hours

⚠ WARNING

Failure to maintain the proper torque of the wheel nuts could result in failure or loss of a wheel, and may result in personal injury.

Torque the front and rear-wheel nuts to 94 to 122 N·m (70 to 90 ft-lb) at the recommended service intervals.

Adjusting the Height of Cut

Important: **This cutting deck often cuts approximately 6 mm (1/4 inch) lower than a reel cutting unit with the same bench setting. It may be necessary to have the bench of the rotary cutting deck set 6 mm (1/4 inch) above that of reels cutting in the same area.**

Important: **Access to the rear cutting units is greatly improved by removing the cutting unit from the tractor. If the unit is equipped with a Sidewinder®, sidewind the cutting units to the right, remove the rear cutting unit, and slide it out to the right side.**

1. Lower the cutting deck to the ground, shut off the engine, and remove the key from the ignition switch.
2. Loosen the bolt securing each height-of-cut bracket to the height-of-cut plate (front and each side) as shown in Figure 19.
3. Beginning with the front adjustment, remove the bolt.

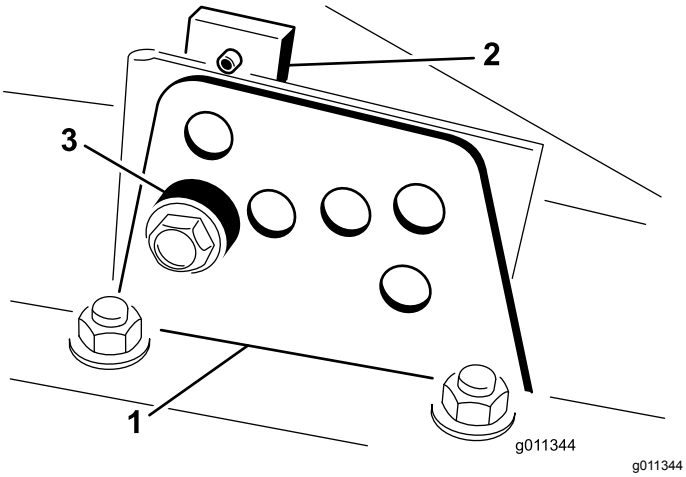

g011344

Figure 19

1. Height-of-cut bracket
2. Height-of-cut plate
3. Spacer

4. While supporting the chamber, remove the spacer (Figure 19).
5. Move the chamber to the desired height of cut and install a spacer into the designated height-of-cut hole and slot (Figure 20).

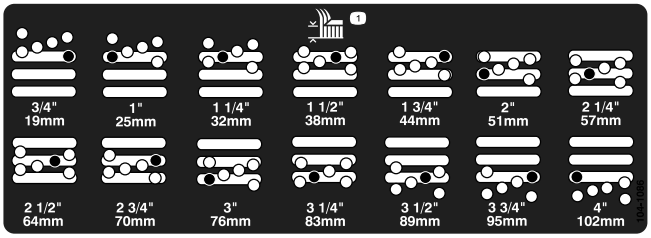

g026184

Figure 20

6. Position the tapped plate in-line with the spacer.
7. Install the bolt finger-tight.
8. Repeat steps through for each side adjustment.
9. Torque all 3 bolts to 41 N·m (30 ft-lb). Always tighten the front bolt first.

   Note: Adjustments of more than 3.8 cm (1-1/2 inches) may require temporary assembly to an intermediate height to prevent binding (e.g., changing from 3.1 to 7 cm (1-1/4 to 2-3/4 inches) height of cut).

Burnishing the Brakes

To ensure optimum performance of the parking-brake system, burnish (break in) the brakes before use. Set the forward traction speed to 6.4 km/h (4 mph) to match the reverse traction speed (all 8 spacers moved to the top of the mow-speed control). With the engine at high idle, proceed forward with the mow-speed-control stop engaged and ride the brake for 15 seconds. Proceed backward at full reverse speed and ride the brake for 15 seconds. Repeat this 5 times, waiting 1 minute between each forward and reverse cycle to avoid overheating the brakes; refer to Adjusting the Parking Brakes (page 49).

Bleeding the Fuel System

You must bleed the fuel system before starting the engine if any of the following situations have occurred:

- Initial start-up of a new machine.
- Engine has ceased running due to lack of fuel.
- Maintenance has been performed upon fuel system components; i.e., filter replaced, separator serviced, etc.

⚠ DANGER

Under certain conditions, diesel fuel and fuel vapors are highly flammable and explosive. A fire or explosion from fuel can burn you and others and can cause property damage.

- **Use a funnel and fill the fuel tank outdoors, in an open area, when the engine is off and is cold. Wipe up any fuel that spills.**
- **Do not fill the fuel tank completely full. Add fuel to the fuel tank until the level is 6 to 13 mm (0.25 to 0.50 inch) below the bottom of the filler neck. This empty space in the tank allows the fuel to expand.**
- **Never smoke when handling fuel, and stay away from an open flame or where fuel fumes may be ignited by a spark.**
- **Store fuel in a clean, safety-approved container and keep the cap in place.**

1. Engage the parking brake, turn the key in the ignition switch to the OFF position, park the machine on a level surface, and ensure that the fuel tank is at least half full.
2. Open the hood.
3. Open the air-bleed screw on the fuel injection pump (Figure 21) with a 12 mm wrench.

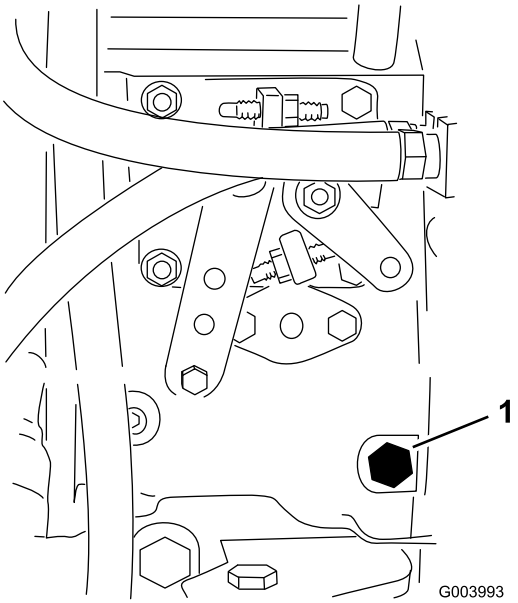

Figure 21

1. Bleed screw

4. Turn the key in the ignition switch to the ON position. The electric fuel pump will begin operation, thereby forcing air out around the air bleed screw. Leave the key in the ON position until a solid stream of fuel flows out around the screw.
5. Tighten the screw and turn the key to the OFF position.

Note: Normally, the engine should start after the above bleeding procedures are followed. However, if engine does not start, air may be trapped between injection pump and injectors; refer to Bleeding Air from the Fuel Injectors (page 44).

Checking the Safety-Interlock Switches

Service Interval: Before each use or daily

⚠ CAUTION

If the safety-interlock switches are disconnected or damaged, the machine could operate unexpectedly and cause personal injury.

- **Do not tamper with the safety-interlock switches.**
- **Check the operation of the safety-interlock switches daily and replace any damaged switches before operating the machine.**

The machine has interlock switches in the electrical system. These switches disengage either the traction or the PTO whenever you leave the seat. Although the engine continues to run if you disengage the PTO switch, and you release the traction pedal, shut off the engine before rising from the seat.

1. Park the machine on a level surface, lower the cutting unit, shut off the engine, and engage the parking brake.
2. Press the traction pedal. Turn the key in the ignition switch to the ON position.

   Note: If the engine cranks, there is a malfunction in the interlock system. Correct this malfunction before operating the machine.
3. Turn the key in the ignition switch to the ON position, start the engine, rise from the seat, and move the PTO switch to the ON position.

   Note: The PTO should not engage. If the PTO engages, there is a malfunction in the interlock system. Correct this malfunction before operating the machine.
4. Engage the parking brake, turn the key in the ignition switch to the ON position, start the engine, and move the traction pedal out of the NEUTRAL position.

   Note: The InfoCenter displays "traction denied" and the machine should not move. If the machine does move, there is a malfunction in the interlock system. Correct this malfunction before operating the machine.
5. Start the engine with the PTO engaged.

   Note: If the engine cranks, there is a malfunction in the interlock system. Correct this malfunction before operating the machine.

Checking the Blade Stopping Time

Service Interval: Before each use or daily

The blades of the cutting deck should come to a complete stop in approximately 5 seconds after you shut down the cutting-deck-engagement switch.

Note: Make sure that the decks are lowered onto a clean section of turf or hard surface to avoid thrown dust and debris.

1. Have a second person stand back from the deck at least 6 m (20 feet) and watch the blades on 1 of the cutting decks.
2. Shut the cutting decks down and record the time it takes for the blades to come to a complete stop.

   Note: If this time is greater than 7 seconds, the braking valve needs adjustment. Call your Toro Distributor for assistance in making this adjustment.

Selecting a Blade

Standard Combination Sail

This blade was designed to provide excellent lift and dispersion in almost any condition. If more or less lift and discharge velocity is required, consider a different blade.

Attributes: Excellent lift and dispersion in most conditions.

Angled Sail

The blade generally performs best in lower heights of cut—1.9 to 6.4 cm (3/4 to 2-1/2 inches).

Attributes:

- Discharge remains more even at lower heights of cut.
- Discharge has less tendency to throw left and thus a cleaner look around bunkers and fairways.
- Lower power requirement at lower heights and dense turf.

High-Lift Parallel Sail

The blade generally performs better in the higher heights of cut—7 to 10 cm (2 to 4 inches).

Attributes:

- More lift and higher discharge velocity.
- Sparse or limp turf is picked up significantly at higher heights of cut.
- Wet or sticky clippings are discharged more efficiently reducing congestion in the deck.
- Requires more horsepower to run.
- Tends to discharge further left and can tend to windrow at lower heights of cut.

⚠ WARNING

Do not use the high-lift blade with the mulching baffle. The blade could break, resulting in personal injury or death.

Atomic Blade

This blade was designed to provide excellent leaf mulching.

Attribute: Excellent leaf mulching

Understanding the Diagnostic Light

The machine is equipped with a diagnostic light, which indicates if the machine detects a malfunction. The diagnostic light is located on the InfoCenter, above the display screen (Figure 22). When the machine functions properly and the key switch is moved to the ON/RUN position, the diagnostic light turns on briefly to indicate that the light is working properly. When a machine advisory message displays, the light illuminates when the message is present. When a fault message is displayed, the light blinks until the fault is resolved.

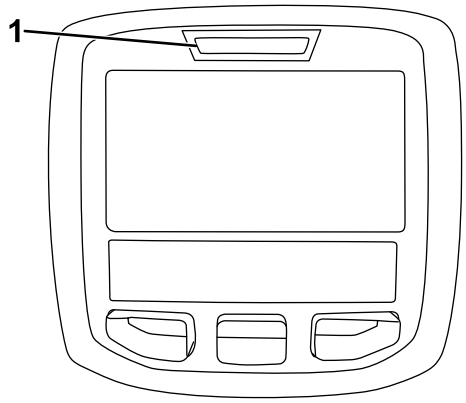

g021272

Figure 22

1. Diagnostic light

Changing the Counterbalance Settings

You can change the amount of required cutting-unit counterbalance (upward lift) to meet your current mowing conditions.

1. Parkthe machine on a level surface, lower the cutting decks, turn the key in the switch to the OFF position, and engage the parking brake.
2. Turn the key in the switch to the RUN position.
3. In the InfoCenter Settings Menu, scroll down to **Counterbalance**.
4. Press the right button to select counterbalance and change between the low, medium, and high settings.

   Note: Once the adjustment has been completed, move the machine to a test area and operate the machine with the new setting. The new counterbalanced setting may change the effective height of cut.

Choosing Accessories

Optional Equipment Configurations

	Angle Sail Blade	**High-Lift, Parallel-Sail Blade** ***(Do not use with the mulching baffle)***	**Mulching Baffle**	**Roller Scraper**
Grass Cutting: 1.9 to 4.4 cm (3/4 to 1-3/4 inches) height of cut	Recommended in most applications	May work well in light or sparse turf	Has been shown to improve dispersion and after cut performance on northern grasses that are cut at least 3 times per week and less than 1/3 of the grass blade is removed. ***Do not use with the high-lift, parallel-sail blade***	Can be used any time that rollers build up with grass or large, flat grass clumps of grass are seen. The scrapers may actually increase clumping in certain applications.
Grass Cutting: 5 to 6.4 cm (2 to 2-1/2 inches) height of cut	Recommended for thick or lush turf	Recommended for light or sparse turf		
Grass Cutting: 7 to 10 cm (2-3/4 to 4 inches) height of cut	May work well in lush turf	Recommended in most applications		
Leaf Mulching	Recommended for use with the mulching baffle	**Not Allowed**	Use with combination sail or angle sail blade only	
Pros	Even discharge at lower height of cut; cleaner look around bunkers and fairways; lower power requirements	More lift and higher discharge velocity; sparse or limp turf is picked up at high height of cut; wet or sticky clippings are discharged efficiently	May improve dispersion and appearance in certain grass cutting applications; very good for leaf mulching	Reduces roller buildup in certain applications
Cons	Does not lift the grass well in high height-of-cut applications; wet or sticky grass has a tendency to build up in the chamber, leading to poor quality of cut and higher power requirements	Requires more power to run in some applications; tends to windrow at lower height of cut in lush grass; do not use with the mulching baffle	Grass will build up in the chamber if you attempt to remove too much grass with the baffle in place	

During Operation

During Operation Safety

General Safety

- The owner/operator can prevent and is responsible for accidents that may cause personal injury or property damage.
- Wear appropriate clothing, including eye protection; long pants; substantial, slip-resistant footwear; and hearing protection. Tie back long hair and do not wear loose jewelry.
- Use your full attention while operating the machine. Do not engage in any activity that causes distractions; otherwise, injury or property damage may occur.
- Do not operate the machine while ill, tired, or under the influence of alcohol or drugs.
- Never carry passengers on the machine and keep bystanders and pets away from the machine during operation.
- Operate the machine only in good visibility to avoid holes or hidden hazards.
- Before you start the engine, ensure that all drives are in neutral, the parking brake is engaged, and you are in the operating position.
- Keep your hands and feet away from rotating parts. Keep clear of the discharge opening at all times.
- Look behind and down before backing up to be sure of a clear path.
- Use care when approaching blind corners, shrubs, trees, or other objects that may obscure your vision.
- Stop the blades whenever you are not mowing.
- Stop the machine, remove the key, and wait for all moving parts to stop before inspecting the attachment after striking an object or if there is an abnormal vibration in the machine. Make all necessary repairs before resuming operation.
- Slow down and use caution when making turns and crossing roads and sidewalks with the machine. Always yield the right-of-way.
- Disengage the drive to the cutting unit, shut off the engine, remove the key, and wait for all moving parts to stop before adjusting the height of cut (unless you can adjust it from the operating position).
- Never run an engine in an area where exhaust gasses are enclosed.
- Never leave a running machine unattended.
- Before leaving the operating position (including to empty the catchers or to unclog the chute), do the following:
  - Park the machine on level ground.
  - Disengage the power takeoff and lower the attachments.
  - Engage the parking brake.
  - Shut off the engine and remove the key.
  - Wait for all moving parts to stop.
- Do not operate the machine when there is the risk of lightning.
- Do not use the machine as a towing vehicle.
- Use accessories, attachments, and replacement parts approved by The Toro® Company only.

Rollover Protection System (ROPS) Safety

- **Do not** remove the ROPS from the machine.
- Ensure that the seat belt is attached and that you can release it quickly in an emergency.
- Check carefully for overhead obstructions and do not contact them.
- Keep the ROPS in safe operating condition by thoroughly inspecting it periodically for damage and keeping all the mounting fasteners tight.
- Replace damaged ROPS components. Do not repair or alter them.

Machines with a Fixed Roll Bar

- The ROPS is an integral safety device.
- Always wear your seat belt.

Slope Safety

- Slopes are a major factor related to loss of control and rollover accidents, which can result in severe injury or death. You are responsible for safe slope operation. Operating the machine on any slope requires extra caution.
- Evaluate the site conditions to determine if the slope is safe for machine operation, including surveying the site. Always use common sense and good judgment when performing this survey.
- Review the slope instructions listed below for operating the machine on slopes and to determine whether you can operate the machine in the conditions on that day and at that site. Changes in the terrain can result in a change in slope operation for the machine.

- Avoid starting, stopping, or turning the machine on slopes. Avoid making sudden changes in speed or direction. Make turns slowly and gradually.
- Do not operate a machine under any conditions where traction, steering, or stability is in question.
- Remove or mark obstructions such as ditches, holes, ruts, bumps, rocks, or other hidden hazards. Tall grass can hide obstructions. Uneven terrain could overturn the machine.
- Be aware that operating the machine on wet grass, across slopes, or downhill may cause the machine to lose traction. Loss of traction to the drive wheels may result in sliding and a loss of braking and steering.
- Use extreme caution when operating the machine near drop-offs, ditches, embankments, water hazards, or other hazards. The machine could suddenly roll over if a wheel goes over the edge or the edge caves in. Establish a safety area between the machine and any hazard.
- Identify hazards at the base of the slope. If there are hazards, mow the slope with a pedestrian-controlled machine.
- If possible, keep the cutting unit(s) lowered to the ground while operating on slopes. Raising the cutting unit(s) while operating on slopes can cause the machine to become unstable.
- Use extreme caution with grass-collection systems or other attachments. These can change the stability of the machine and cause a loss of control. Always keep the machine in gear when going down slopes. Do not coast downhill (applicable only to gear-drive units).

Starting the Engine

Important: **You must bleed the fuel system before starting the engine if you are starting the engine for the first time, the engine has stopped due to lack of fuel, or you have performed maintenance on the fuel system; refer to Bleeding Air from the Fuel Injectors (page 44).**

1. Sit on the seat, keep your foot off the traction pedal so that it is in NEUTRAL, engage the parking brake, set the throttle to the FAST position, and ensure that the Enable/Disable switch is in the DISABLE position.
2. Turn the key in the switch to the ON/PREHEAT position.

   Note: An automatic timer controls the glow plug preheat for 6 seconds.
3. After preheating the glow plugs, turn the key in the switch to the START position.
4. Crank the engine for no longer than 15 seconds. Release the key when the engine starts.
5. If additional preheating is required, turn the key in the switch to the OFF position and then to the ON/PREHEAT position. Repeat this process as required.
6. Run the engine at low idle speed until it warms up.

Shutting Off the Engine

1. Move all controls to NEUTRAL, engage the parking brake, move the throttle to the LOW IDLE position, and allow the engine to reach low-idle speed.

   Important: **Allow the engine to idle for 5 minutes before shutting it off after a full load operation. Failure to do so may lead to trouble on a turbo-charged engine.**
2. Turn the key in the switch to the OFF position and remove the key.

Operating Tips

Becoming Familiarized with the Machine

Before mowing grass, practice operating the machine in an open area. Start and shut off the engine. Operate in forward and reverse. Lower and raise the cutting decks and engage and disengage the mowers. When you feel familiar with the machine, practice operating up and down slopes at different speeds.

Selecting the Proper Height-of-Cut Setting to Suit Conditions

Remove no more than approximately 25 mm (1 inch), or 1/3 of the grass blade when cutting. In exceptionally lush and dense grass, you may need to raise your height-of-cut setting.

Mowing

Turn the key in the ignition switch to the ON position, start the engine, and move the throttle to the FAST position. Move the Enable/Disable switch to the ENABLE position and use the Lower Mow/Raise lever to control the cutting decks. To move forward and cut grass, press the traction pedal forward.

Note: Allow the engine to idle for 5 minutes before shutting it off after a full load operation. Failure to do so may lead to turbo-charger trouble.

Mowing with Sharp Blades

A sharp blade cuts cleanly and without tearing or shredding the grass blades. A dull blade, which tears and shreds grass, causes grass to turn brown at the edges. This impairs grass growth and increases susceptibility to diseases. Ensure that the blade is in good condition and that there is a full sail.

Checking the Cutting-Unit Condition

Ensure that the chambers of each cutting unit are in good condition. Straighten any chamber-component bends to ensure the correct blade tip/chamber clearance.

Checking the Mower Housing After Operating

To ensure that optimum performance is met, clean the underside of mower housing. If you allow residue to build up in mower housing, cutting performance will decrease.

Transporting the Machine

Move the Enable/Disable switch to the DISABLE position and raise the cutting units to the TRANSPORT position. Move the Mow/Transport lever to the TRANSPORT position. Be careful when driving between objects so you do not accidentally damage the machine or cutting units. Use extra care when operating the machine on slopes; refer to Slope Safety (page 32).

After Operation

After Operation Safety

- Clean grass and debris from the cutting units, mufflers, and engine compartment to help prevent fires. Clean up oil or fuel spills.
- If the cutting units are in the transport position, use the positive mechanical lock (if available) before you leave the machine unattended.
- Allow the engine to cool before storing the machine in any enclosure.
- Remove the key and shut off the fuel (if equipped) before storing or transporting the machine.
- Never store the machine or fuel container where there is an open flame, spark, or pilot light, such as on a water heater or on other appliances.
- Keep all parts of the machine in good working condition and all hardware tightened, especially blade-attachment hardware.
- Maintain and clean the seat belt(s) as necessary
- Replace all worn or damaged decals.

Identifying the Tie-Down Points

- **Front of the machine**—the hole in the rectangular pad, under the axle tube, inside each front tire (Figure 23).

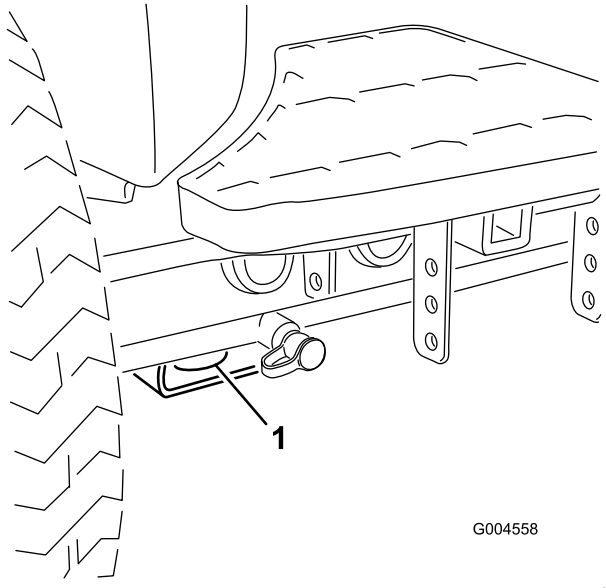

Figure 23

1. Front tie-down

- **Rear of the machine**—each side of the machine on the rear frame (Figure 24).

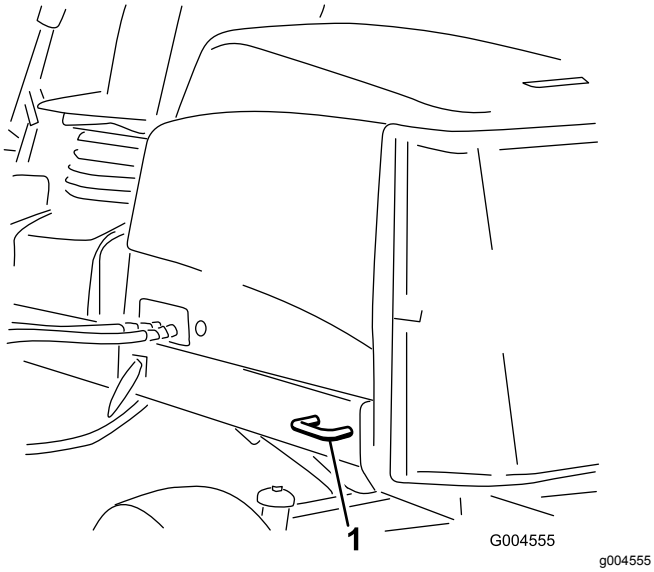

Figure 24

1. Rear tie-down

Hauling the Machine

- Use care when loading or unloading the machine into a trailer or a truck.
- Use full-width ramps for loading the machine into a trailer or a truck.
- Tie the machine down securely.

Pushing or Towing the Machine

In an emergency, you can move the machine forward by actuating the bypass valve in the variable-displacement hydraulic pump and pushing or towing the machine.

Important: **Do not push or tow the machine faster than 3 to 4.8 km/h (2 to 3 mph). If you push or tow at a faster speed, internal transmission damage may occur.**

The bypass valves must be open whenever you push or tow the machine.

1. Locate the bypass valve on the left side of the hydrostat (Figure 25).

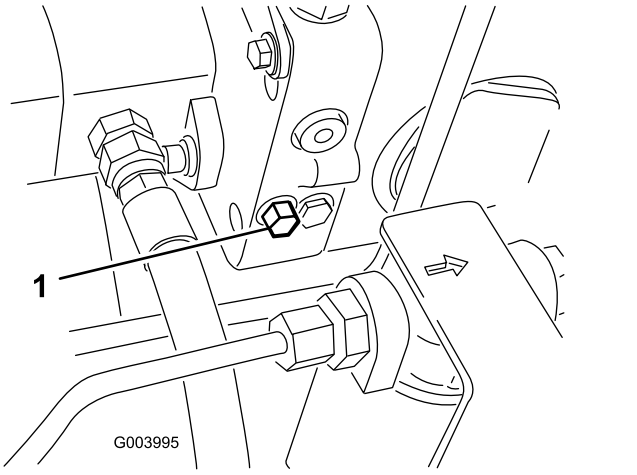

Figure 25

1. Bypass valve

2. Loosen the bolt 1-1/2 turns to allow the oil to bypass internally.

   Note: Because the fluid is bypassed, the machine can be moved slowly without damaging the transmission.

3. Push or tow the machine.
4. Finish pushing or towing the machine and close the bypass valve . Torque the valve to 11 N·m (5 to 8 ft-lb).

   Important: **Ensure that the bypass valve is closed before you start the engine. Running the engine with an open bypass valve causes the transmission to overheat.**

Maintenance

Note: Determine the left and right sides of the machine from the normal operating position.

Recommended Maintenance Schedule(s)

Maintenance Service Interval	Maintenance Procedure
After the first hour	• Torque the wheel-lug nuts to 94 to 122 N·m (70 to 90 ft-lb).
After the first 8 hours	• Check the condition and tension of the alternator belt.
After the first 10 hours	• Torque the wheel-lug nuts to 94 to 122 N·m (70 to 90 ft-lb).
After the first 50 hours	• Change the engine oil and filter. • Check the engine rpm (idle and full throttle).
Before each use or daily	• Check the tire pressure. • Check the operation of the safety-interlock switches. • Check the blade stopping time. • Check the engine-oil level. • Check the level of coolant in the expansion tank and clean debris off the screen, oil cooler, and front of the radiator. • Remove debris from the screen, oil coolers, and radiator (more frequently in dirty operating conditions). • Check the hydraulic fluid level. • Check the hydraulic lines and hoses for leaks, kinked lines, loose mounting supports, wear, loose fittings, weather deterioration, and chemical deterioration.
Every 50 hours	• Grease the bearings and bushings (immediately after every washing regardless of the interval listed). • Check the condition of and clean the battery. • Check the battery cable connections.
Every 100 hours	• Inspect the cooling-system hoses. • Check the condition and tension of the alternator belt.
Every 150 hours	• Change the engine oil and filter.
Every 200 hours	• Drain moisture from the fuel and hydraulic fluid tanks.
Every 250 hours	• Torque the wheel-lug nuts to 94 to 122 N·m (70 to 90 ft-lb).
Every 400 hours	• Service the air cleaner. (Or earlier if the air-cleaner indicator illuminates red. Service it more frequently in extremely dirty or dusty conditions.) • Check the fuel lines and connections for deterioration, damage, or loose connections (or yearly, whichever comes first). • Replace the fuel filter canister. • Check the engine rpm (idle and full throttle).
Every 800 hours	• Drain and clean the fuel tank. • Check the rear wheel toe-in. • Change the hydraulic fluid. • Change the hydraulic filters (sooner if the service interval indicator is in the red zone). • Adjust the engine valves (refer to the engine operator's manual).
Before storage	• Drain and clean the fuel tank.
Every 2 years	• Flush and replace the cooling-system fluid. • Drain and flush the hydraulic tank. • Replace all moving hoses.

Important: **Refer to your engine owner's manual for additional maintenance procedures.**

Daily Maintenance Checklist

Duplicate this page for routine use.

Maintenance Check Item	For the week of:						
	Mon.	Tues.	Wed.	Thurs.	Fri.	Sat.	Sun.
Check the safety-interlock operation.							
Check the brake operation.							
Check the engine oil and fuel level.							
Drain the water/fuel separator.							
Check the air-filter-restriction indicator.							
Check the radiator and screen for debris.							
Check unusual engine noises.[1]							
Check unusual operating noises.							
Check the hydraulic system fluid level.							
Check the hydraulic-filter indicator. [2]							
Check hydraulic hoses for damage.							
Check for fluid leaks.							
Check the tire pressure.							
Check the instrument operation.							
Check the height-of-cut adjustment							
Check the condition of the blades							
Check all grease fittings for lubrication [3]							
Touch-up damaged paint.							

1. Check the glow plug and injector nozzles if hard starting, excess smoke, or rough running is noted.
2. Check with the engine running and the oil at operating temperature
3. Immediately after every washing, regardless of the interval listed

Notation for Areas of Concern

Inspection performed by:

Item	Date	Information
1		
2		
3		
4		
5		
6		
7		
8		

Note: Download a free copy of the electrical or hydraulic schematic by visiting www.Toro.com and searching for your machine from the Manuals link on the home page.

Pre-Maintenance Procedures

Maintenance Safety

- Before adjusting, cleaning, repairing, or leaving the machine, do the following:
  - Park the machine on a level surface.
  - Move the throttle switch to the low-idle position.
  - Disengage the cutting units.
  - Lower the cutting units.
  - Ensure that the traction is in neutral.
  - Engage the parking brake.
  - Shut off the engine and remove the key.
  - Wait for all moving parts to stop.
  - Allow machine components to cool before performing maintenance.
- If the cutting units are in the transport position, use the positive mechanical lock (if available) before you leave the machine unattended.
- If possible, do not perform maintenance while the engine is running. Keep away from moving parts.
- Use jack stands to support the machine or components when required.
- Carefully release pressure from components with stored energy.

Raising the Machine

Use the following as points to jack up the machine:

- **Front of the machine**—rectangular pad, under the axle tube, inside each front tire (Figure 26).

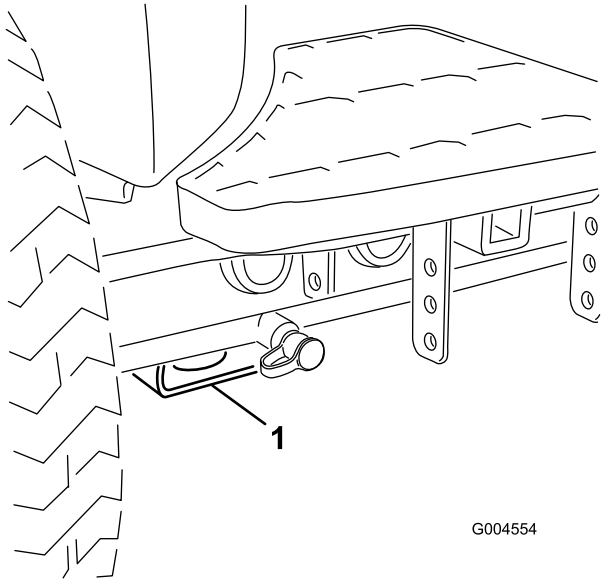

Figure 26

1. Front jacking point

- **Rear of the machine**—rectangular axle tube on the rear axle.

Lubrication

Greasing the Bearings and Bushings

If you operate the machine under normal conditions, use No. 2 lithium grease to lubricate all bearings and bushings at the specified maintenance interval. Lubricate bearings and bushings **immediately** after every washing, regardless of the interval listed.

The grease fitting locations and quantities are as follows:

- Pump driveshaft U-joint (3)—Figure 27

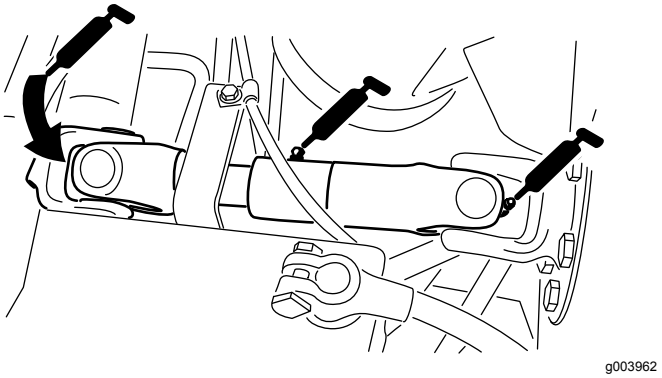

Figure 27

- Cutting unit lift-arm cylinders (2 each)—Figure 28

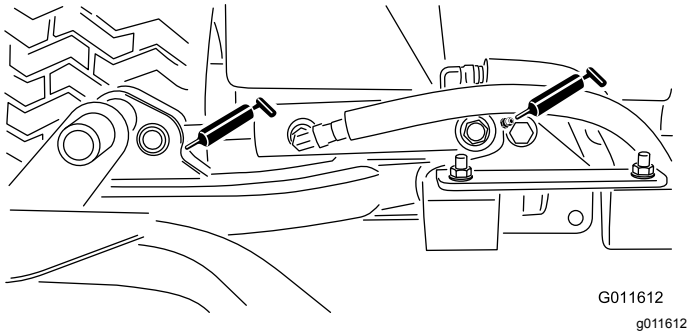

Figure 28

- Lift-arm pivots (1 each)—Figure 28
- Cutting unit carrier-frame pivot (1 each)—Figure 29

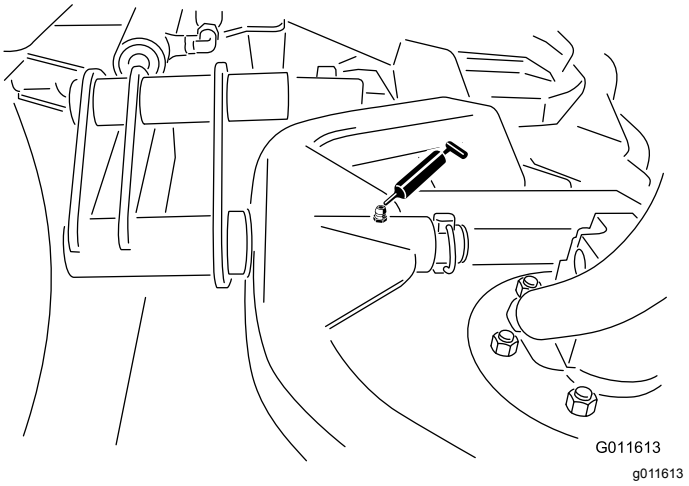

Figure 29

- Lift-arm pivot shaft (1 each)—Figure 30

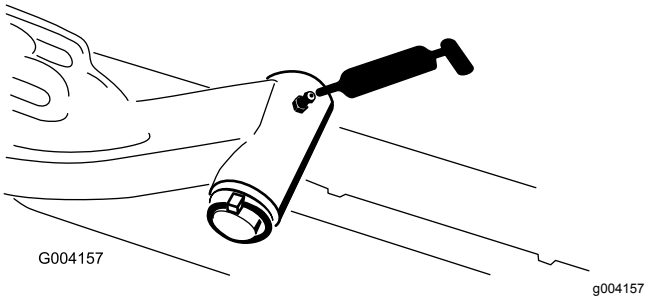

Figure 30

- Rear axle tie rod (2)—Figure 31

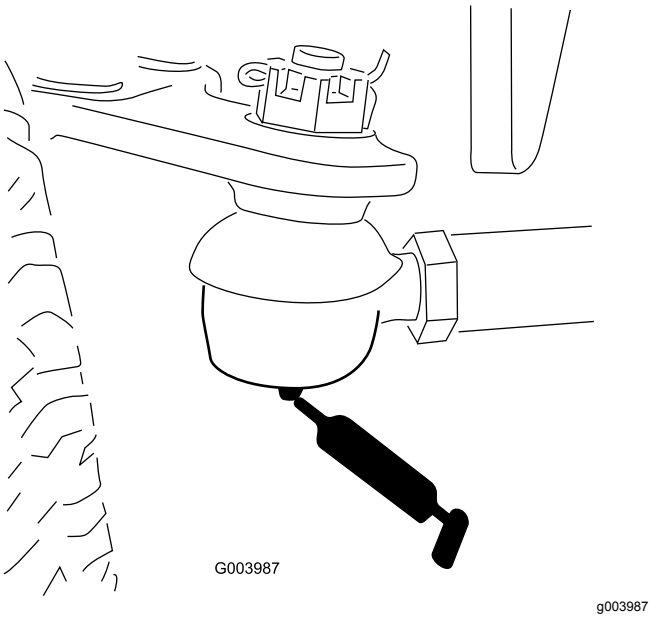

Figure 31

- Axle-steering pivot (1)—Figure 32

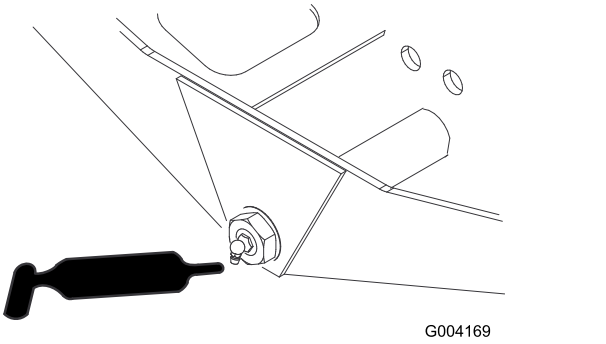

Figure 32

- Steering-cylinder ball joints (2) and rear axle (1)—Figure 33

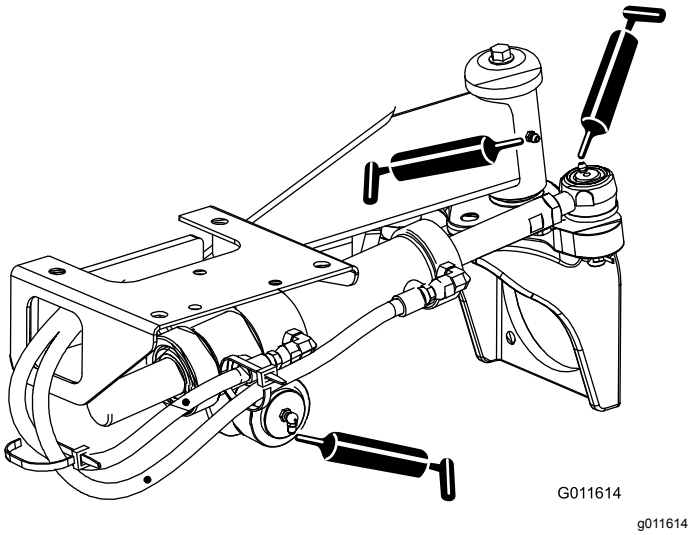

Figure 33

- Brake pedal (1)—Figure 34

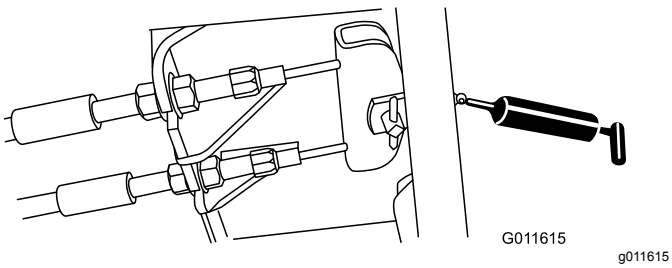

Figure 34

- Cutting unit spindle-shaft bearings (2 per cutting unit)—Figure 35

  Note: You can use either fitting, whichever is more accessible. Pump grease into the fitting until a small amount appears at bottom of the spindle housing (under the cutting unit).

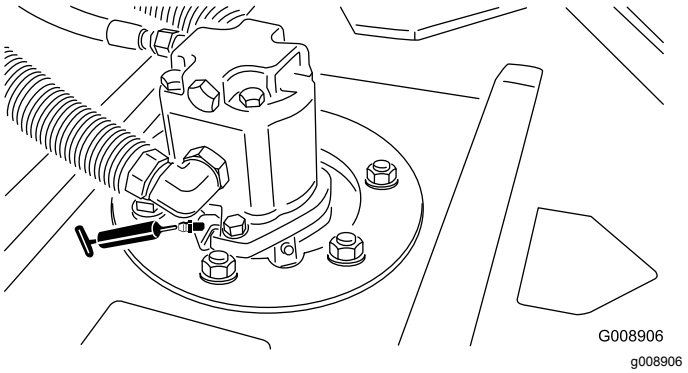

Figure 35

- Rear-roller bearings (2 per cutting unit)—Figure 36

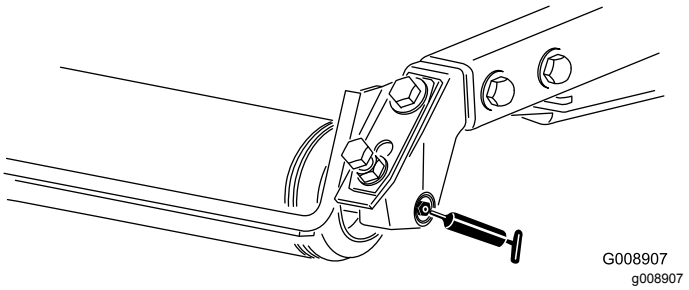

Figure 36

Note: Ensure that the grease groove in each roller mount aligns with the grease hole in each end of the roller shaft. To help align the groove and hole, there is also an alignment mark on 1 end of the roller shaft.

Engine Maintenance

Engine Safety

- Shut off the engine and remove the key before checking the oil or adding oil to the crankcase.
- Do not change the governor speed or overspeed the engine.

Servicing the Air Cleaner

Check the whole intake system for leaks, damage, or loose hose clamps. Do not use a damaged air filter.

Service the air-cleaner filter only when the service indicator requires it. Changing the air filter before it is necessary only increases the chance of dirt entering the engine when the filter is removed.

Important: **Make sure that the cover is seated correctly, seals with the air-cleaner body, and the rubber outlet valve is in a downward position—between the 5 o'clock and 7 o'clock positions when viewed from the end.**

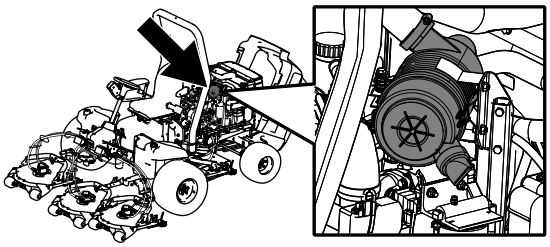

g194209

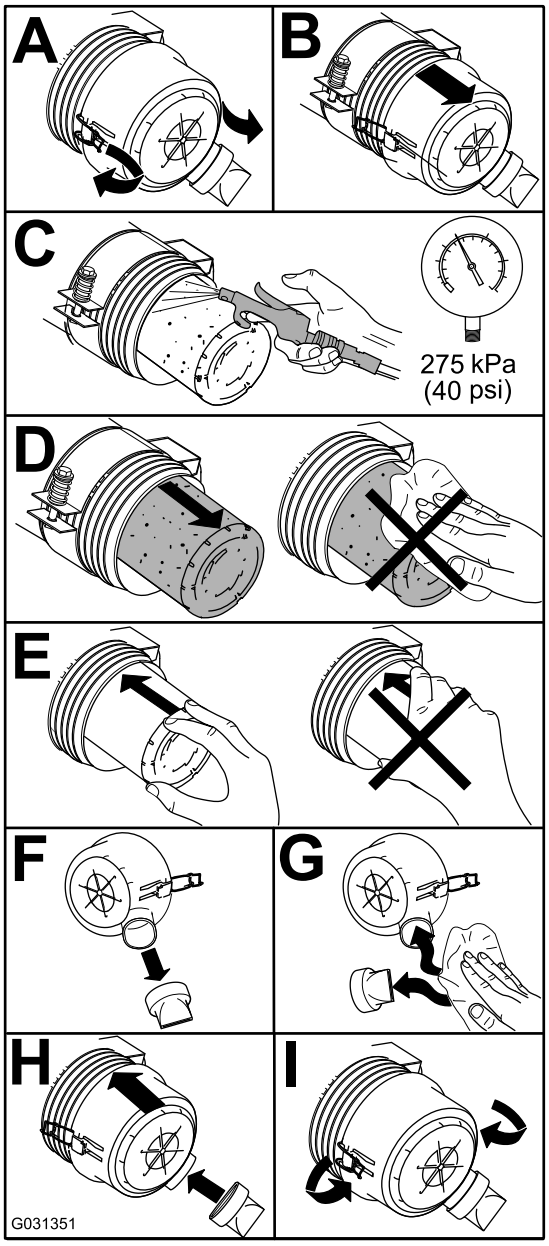

g031351

Figure 37

Servicing the Engine Oil

Checking the Engine-Oil Level

Service Interval: Before each use or daily

The engine is shipped with oil in the crankcase; however, the oil level must be checked before and after the engine is first started.

Crankcase capacity is approximately 5.2 L (5.5 US qt) with the filter.

Use high-quality engine oil that meets the following specifications:

- **API Classification Level Required:** CH-4, CI-4 or higher
- **Preferred oil:** SAE 15W-40 (above -17.8°C (0°F))
- **Alternate oil:** SAE 10W-30 or 5W-30 (all temperatures)

Toro Premium Engine oil is available from your distributor in either 15W-40 or 10W-30 viscosity.

1. Park the machine on a level surface, shut off the engine, engage the parking brake, and remove the key from the ignition switch.
2. Check the engine-oil level (Figure 38).

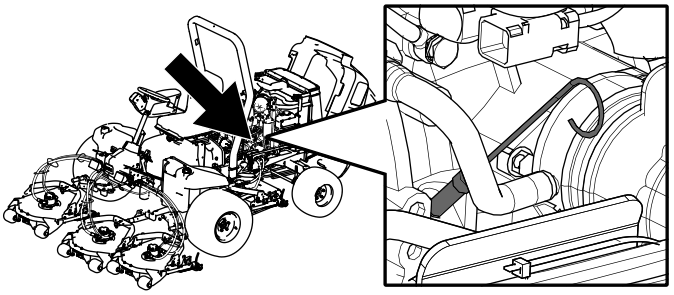

g194204

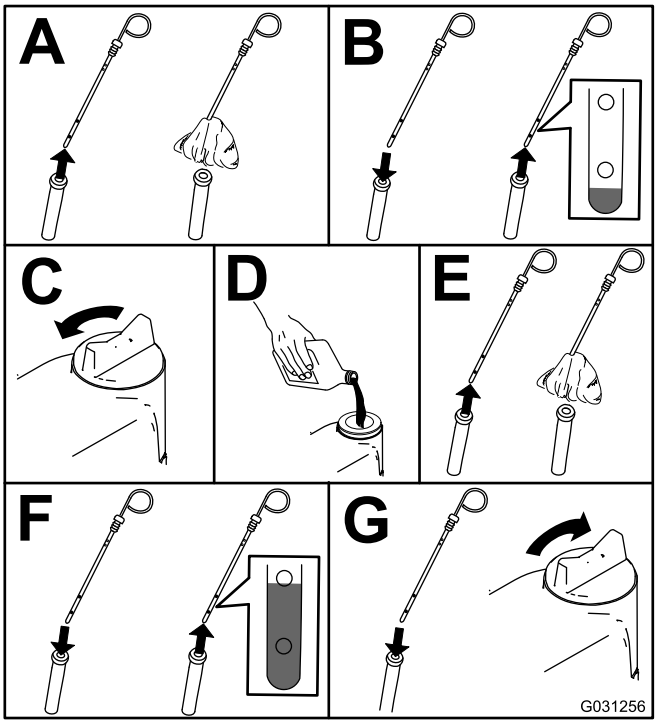

g031256

Figure 38

Important: **Be sure to keep the engine-oil level between the upper and lower limits on the oil gauge. Engine failure may occur as a result of over filling or under filling the engine oil.**

Changing the Engine Oil and Filter

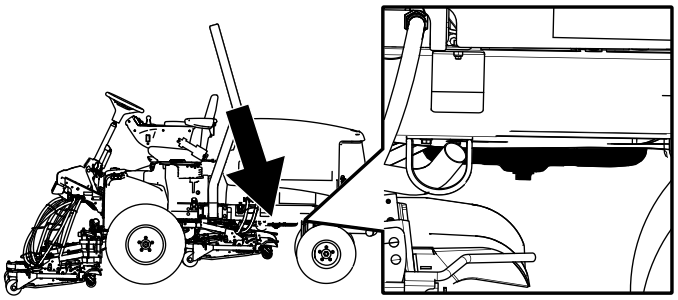

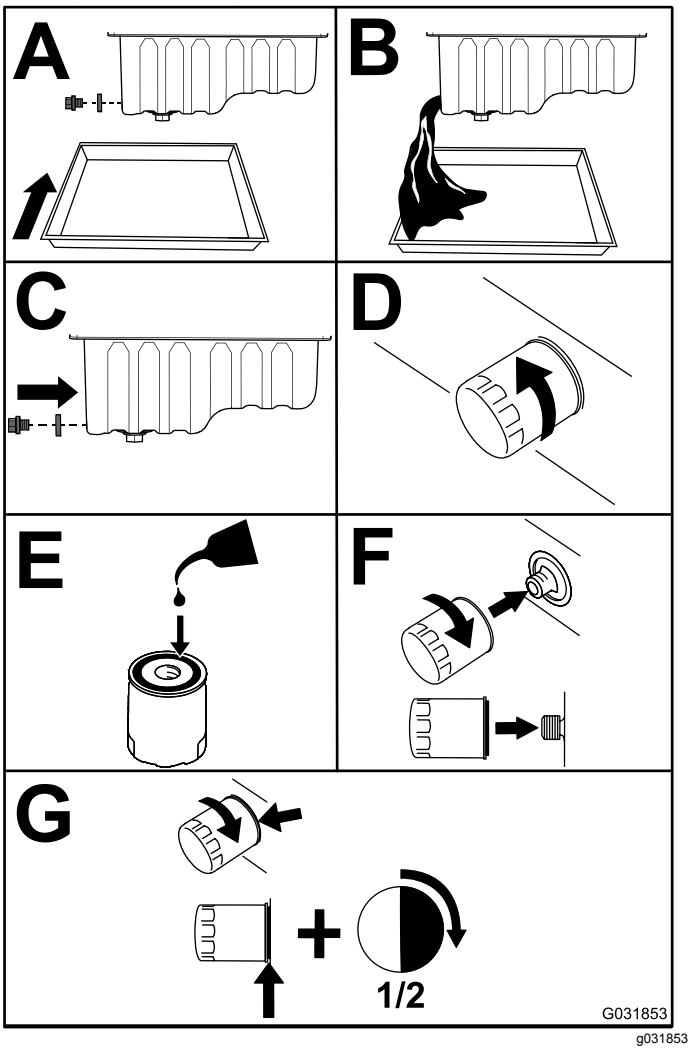

Figure 39

Important: **Do not overtighten the filter.**

Add oil to the crankcase; refer to Servicing the Engine Oil (page 42).

Fuel System Maintenance

Servicing the Fuel System

Draining the Fuel Tank

Service Interval: Every 800 hours

Before storage

Drain and clean the fuel tank if the fuel system becomes contaminated or if the machine is to be stored for an extended period. Use clean fuel to flush out the tank.

Checking the Fuel Lines and Connections

Inspect them for deterioration, damage, or loose connections.

Servicing the Water Separator

Service Interval: Every 400 hours

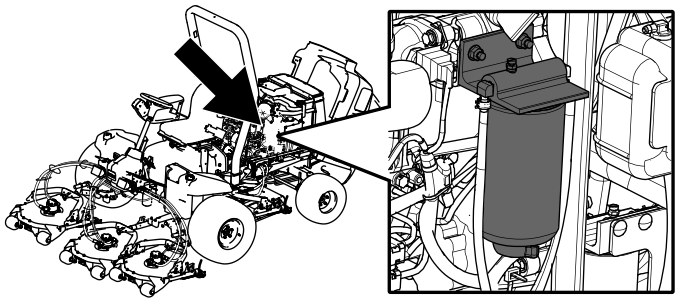

g194210

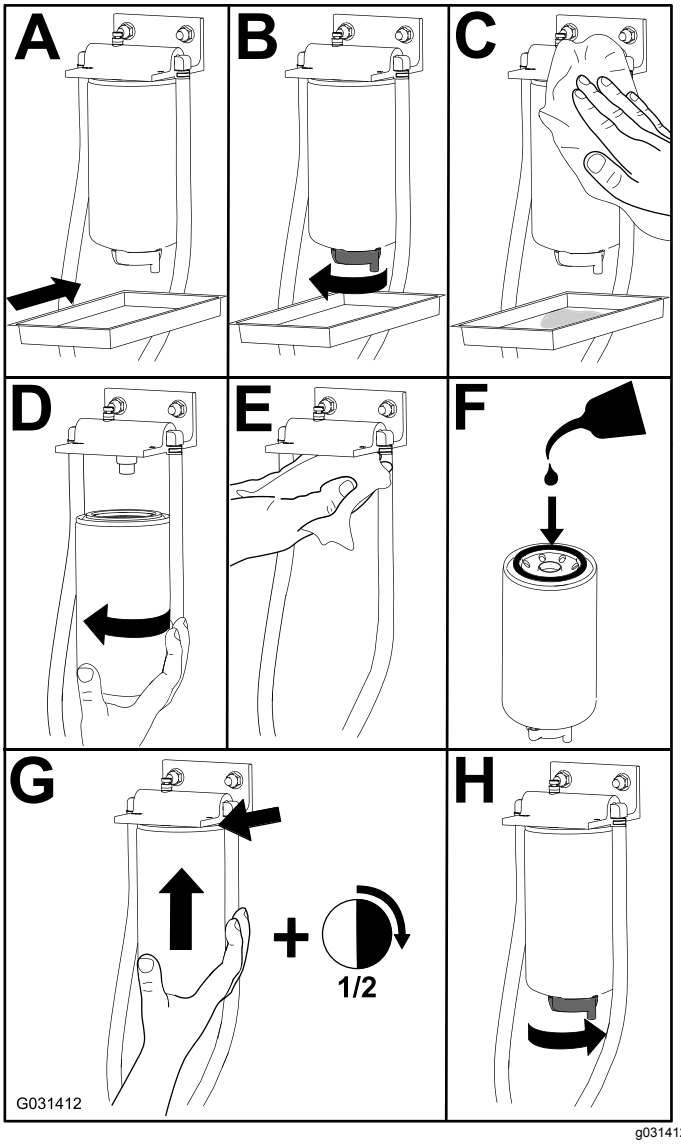

g031412

Figure 40

Servicing the Fuel-Pickup Tube

The fuel-pickup tube, located inside the fuel tank, is equipped with a screen to help prevent debris from entering the fuel system. Remove the fuel-pickup tube and clean screen as required.

Bleeding Air from the Fuel Injectors

Note: This procedure should be used only if the fuel system has been purged of air through normal priming procedures and the engine does not start; refer to Bleeding the Fuel System (page 28).

1. Loosen the pipe connection to the No. 1 nozzle and holder assembly (Figure 41).

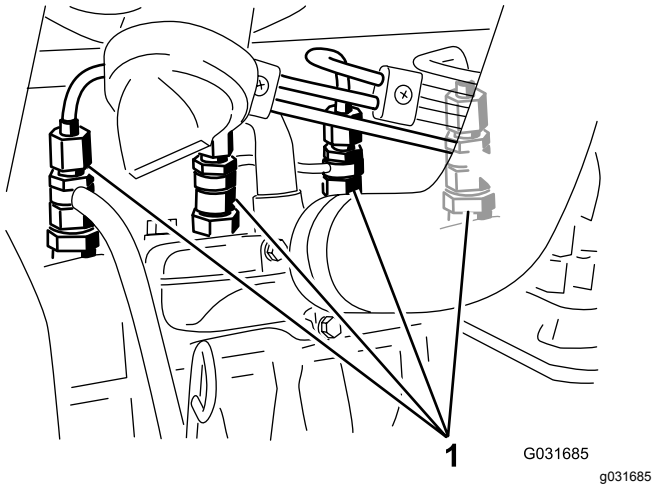

g031685

Figure 41

1. Fuel injectors

2. Turn the key in the ignition switch to the ON position and watch the fuel flow around the connector.
3. When you observe a solid flow of fuel, turn the key in the ignition switch to the OFF position.
4. Tighten the pipe connector securely.
5. Repeat steps 1 through 4 on the remaining nozzles.

Electrical System Maintenance

Electrical System Safety

- Disconnect the battery before repairing the machine. Disconnect the negative terminal first and the positive last. Connect the positive terminal first and the negative last.
- Charge the battery in an open, well-ventilated area, away from sparks and flames. Unplug the charger before connecting or disconnecting the battery. Wear protective clothing and use insulated tools.

Servicing the Battery

After every 50 hours of operation, perform the following tasks to service the battery:

- Check the battery condition
- Clean the battery (if necessary)

  Note: To clean the battery, wash the entire case with a solution of baking soda and water. Rinse it with clear water.
- Check the battery-cable connections

Locating the Fuses

There are 8 fuses in the electrical system. The fuse block (Figure 42) is located behind the control-arm-access panel. Refer to Figure 43 for a description of each fuse.

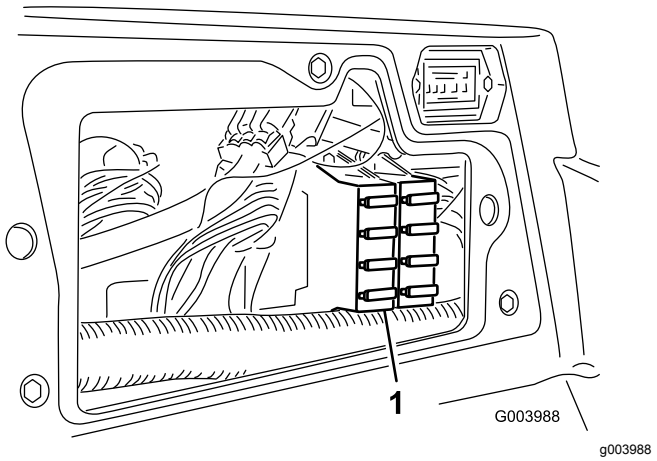

Figure 42

1. Fuse block

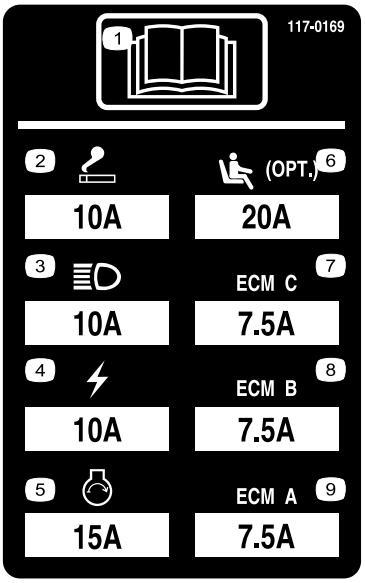

Figure 43

1. Read the *Operator's Manual.*
2. Power point (10 A)
3. Head lights (10 A)
4. Power (10 A)
5. Engine start (15 A)
6. Optional air ride seat suspension (20 A)
7. Engine computer management C (7.5 A)
8. Engine computer management B (7.5 A)
9. Engine computer management A (7.5 A)

Charging the Battery

⚠ WARNING

Charging the battery produces gasses that can explode.

Do not smoke near the battery, and keep sparks and flames away from the battery.

Important: **Keep the battery fully charged. This is especially important to prevent battery damage when the temperature is below 0°C (32°F).**

1. Clean the exterior of the battery case and the battery posts.

   Note: Connect the leads of the battery charger to battery posts before connecting the charger to the electrical source.

2. Look at the battery and identify the positive and negative battery posts.
3. Connect the positive lead of the battery charger to the positive battery post (Figure 44).

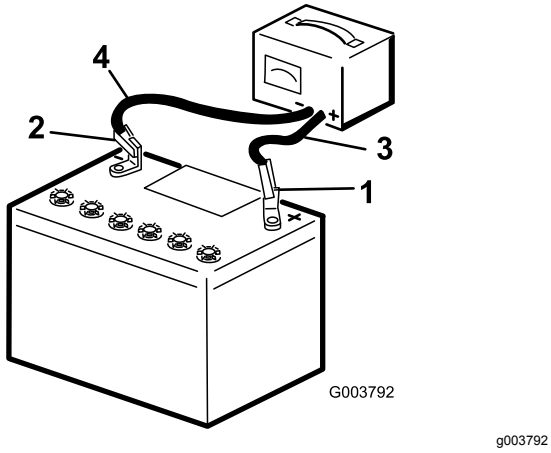

g003792

Figure 44

1. Positive battery post
2. Negative battery post
3. Red (+) charger lead
4. Black (-) charger lead

4. Connect the negative lead of the battery charger to the negative-battery post (Figure 44).
5. Connect the battery charger to the electrical source, and charge the battery.

   Important: **Do not overcharge the battery.**

6. When the battery is fully charged, unplug the charger from the electrical source, then disconnect the charger leads from the battery posts (Figure 44).

Drive System Maintenance

Adjusting the Traction Drive for Neutral

The machine must not creep when the traction pedal is released. If it does creep, adjust as follows:

1. Park the machine on a level surface, shut off the engine, and lower the cutting units to the ground.
2. Jack up the machine until all the tires are off the ground; refer to Raising the Machine (page 38). Support the machine with jack stands to prevent it from falling accidentally.
3. On the right side of the hydrostat, loosen the locknut on the traction-adjustment cam (Figure 45).

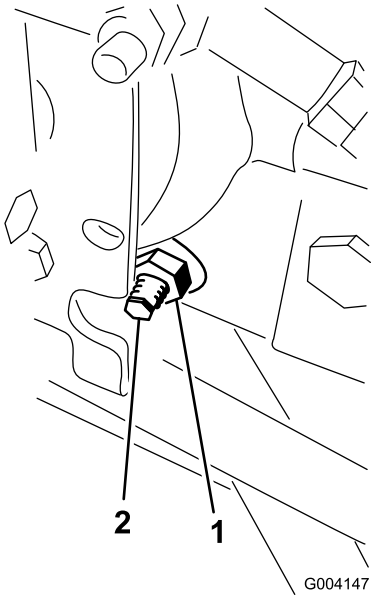

g004147

Figure 45

1. Locknut
2. Traction-adjustment cam

⚠ WARNING

The engine must be running so the final adjustment of the traction adjustment cam can be performed. This could cause personal injury.

Keep your hands, feet, face, and other body parts away from the muffler, other hot parts of the engine, and any rotating parts.

4. Turn the key in the switch to the ON position, start the engine, and rotate the cam hex in either direction until the wheels cease rotation.
5. Tighten the locknut to secure the adjustment.
6. Turn the key in the switch to the OFF position, remove the jack stands, and lower the machine to the ground.
7. Test drive the machine to make sure that it does not creep.

Adjusting the Rear Wheel Toe-in

1. Rotate the steering wheel so that the rear wheels are straight ahead.
2. Loosen the jam nut on each end of the tie rod (Figure 46).

   Note: The end of the tie rod with the external groove is a left thread.

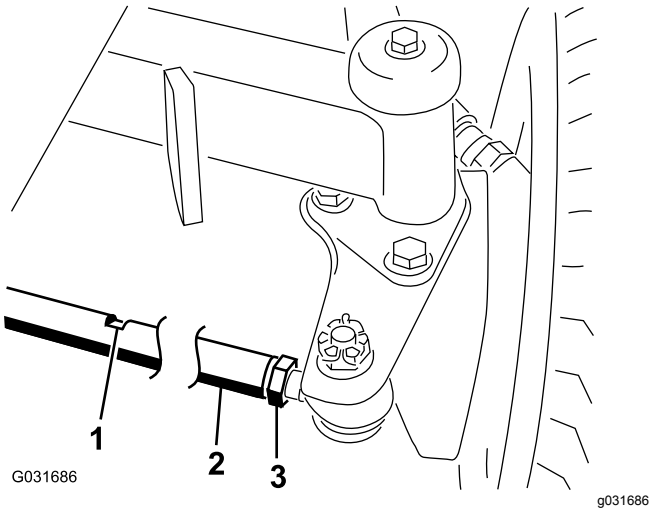

Figure 46

1. Wrench slot
2. Tie rod
3. Jam nut

3. Using the wrench slot, rotate the tie rod.
4. Measure the distance at the front and rear of the rear wheels at axle height.

   Note: The distance at the front of the rear wheels should be less than 6 mm (1/4 inch) of the distance measured at the rear of the wheels.
5. Repeat procedure as required.

Cooling System Maintenance

Cooling System Safety

- Swallowing engine coolant can cause poisoning; keep out of reach from children and pets.
- Discharge of hot, pressurized coolant or touching a hot radiator and surrounding parts can cause severe burns.
  - Always allow the engine to cool at least 15 minutes before removing the radiator cap.
  - Use a rag when opening the radiator cap, and open the cap slowly to allow steam to escape.
- Do not operate the machine without the covers in place.
- Keep your fingers, hands and clothing clear of rotating fan and drive belt.
- Shut off the engine and remove the key before performing maintenance.

Checking the Cooling System

Service Interval: Before each use or daily—Check the level of coolant in the expansion tank and clean debris off the screen, oil cooler, and front of the radiator.

The cooling system is filled with a 50/50 solution of water and permanent ethylene glycol antifreeze. The capacity of the cooling system is 9.5 L (10 US qt).

⚠ DANGER

The rotating fans and drive belts can cause personal injury.

- **Do not operate the machine without the covers in place.**
- **Keep your fingers, hands, and clothing clear of the rotating fan and drive belt.**
- **Shut off the engine and remove the key before performing maintenance.**

⚠ CAUTION

If the engine has been running, the pressurized, hot coolant can escape and cause burns.

- **Do not open the radiator cap when the engine is running.**
- **Use a rag when opening the radiator cap, and open the cap slowly to allow steam to escape.**

1. Check the level of coolant in the expansion tank (Figure 47).

   Note: The coolant level should be between the marks on the side of the tank.

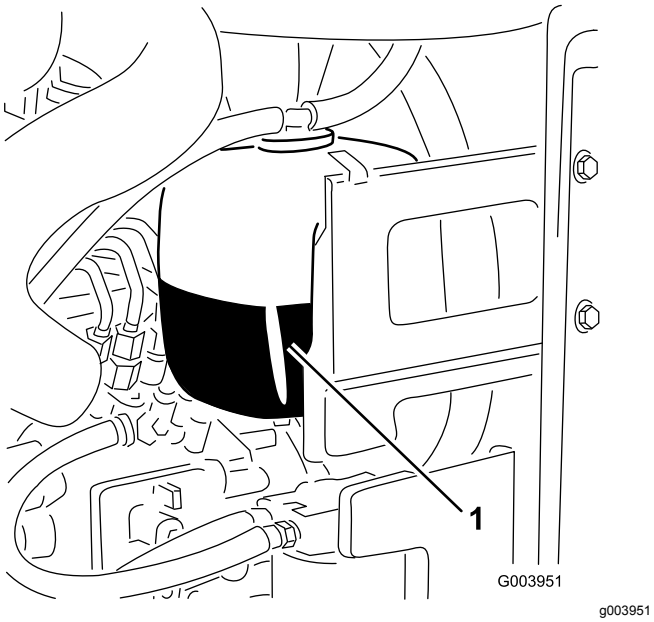

Figure 47

1. Expansion tank

2. If the coolant level is low, remove the expansion-tank cap and replenish the system. **Do not overfill.**
3. Install the expansion-tank cap.

Removing Debris from the Cooling System

1. Turn the key in the switch to the OFF position and remove the key.
2. Thoroughly clean all debris out of the engine area.
3. Unlatch the clamp and pivot open the rear screen (Figure 48).

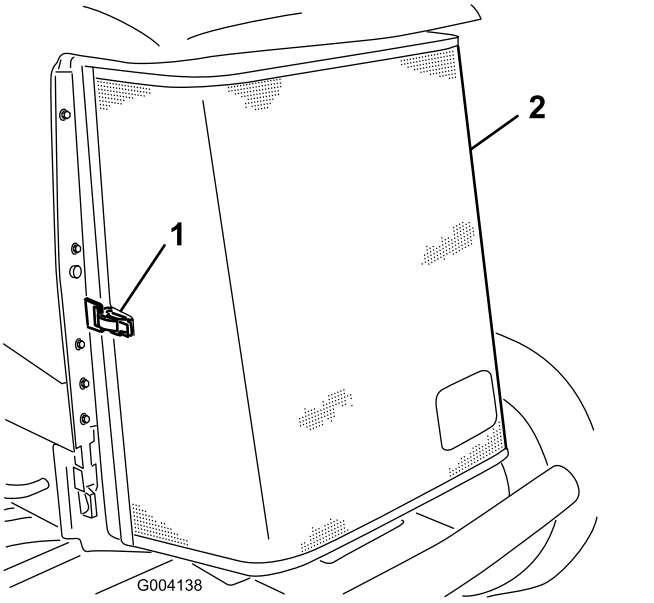

Figure 48

1. Rear-screen latch
2. Rear screen

4. Clean the screen thoroughly with compressed air.
5. Pivot the latches inward to release the oil cooler (Figure 49).

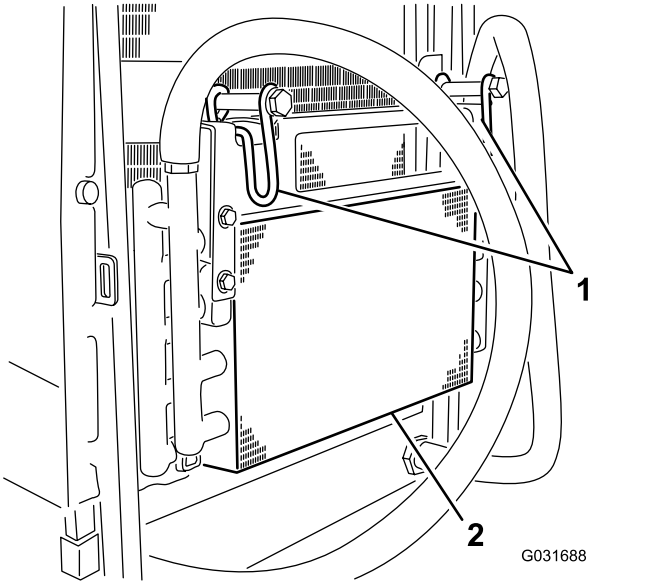

Figure 49

1. Oil-cooler latches
2. Oil cooler

6. Thoroughly clean both sides of the oil cooler and the radiator (Figure 50) with compressed air.

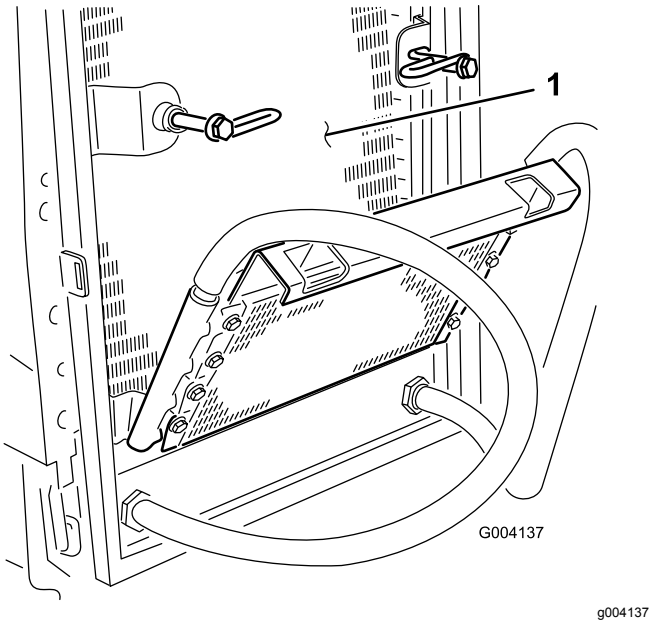

Figure 50

1. Radiator

7. Pivot the oil cooler back into position and secure the latches.
8. Close the screen and secure the latch.

Brake Maintenance

Adjusting the Parking Brakes

Adjust the brakes when there is more than 2.5 cm (1 inch) of free travel (Figure 51) of the brake pedal, or when more holding force is required. Free travel is the distance the brake pedal moves before you feel braking resistance.

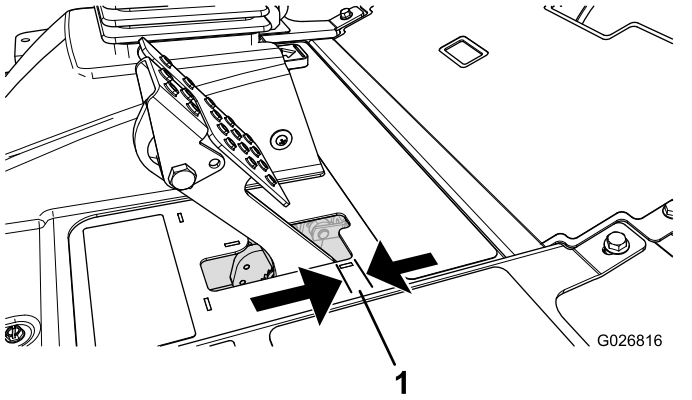

Figure 51

1. Free travel

Note: Use the wheel motor backlash to rock the drums back and forth to ensure that the drums are free prior to and after adjustment.

1. To reduce free travel of the brake pedals, tighten the brakes by loosening the front nut on the threaded end of the brake cable (Figure 52).

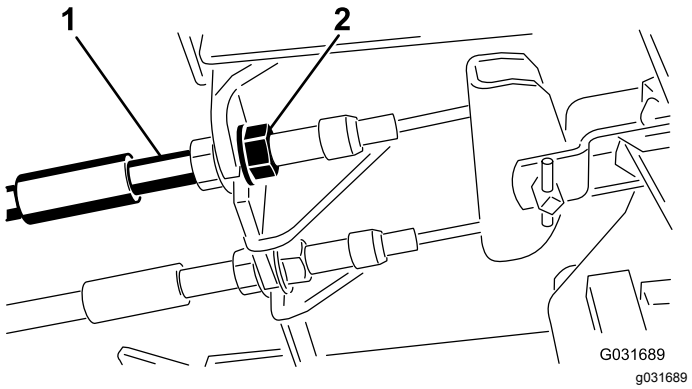

Figure 52

1. Brake cables
2. Front nuts

2. Tighten the rear nut to move the cable backward until brake pedals have 0.63 to 1.27 cm (1/4 to 1/2 inch) of free travel (Figure 51), before wheel lock up is achieved.
3. Tighten the front nuts, ensuring that both cables actuate the brakes simultaneously. Ensure

that the cable conduit does not rotate during tightening procedure.

Adjusting the Parking-Brake Latch

If the parking brake fails to engage and latch, an adjustment to the brake pawl is required.

1. Loosen the 2 screws securing the parking brake pawl to the frame (Figure 53).

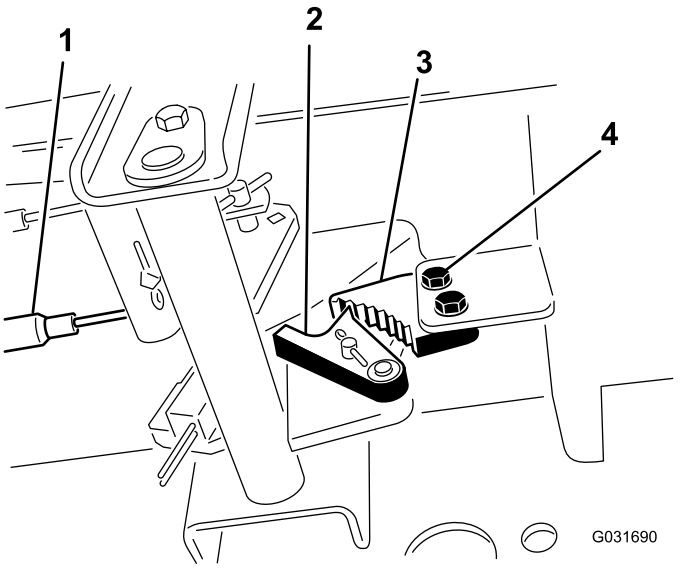

Figure 53

1. Brake cables
2. Brake detent
3. Parking brake pawl
4. Screws (2)

2. Press the parking brake pedal forward until the brake detent completely engages on the brake pawl (Figure 53).
3. Tighten the 2 screws locking the adjustment.
4. Press the brake pedal to disengage the parking brake.
5. Check the adjustment and adjust as required.

Belt Maintenance

Tensioning the Alternator Belt

1. Open the hood.
2. Check the tension of the alternator belt by depressing it (Figure 54) midway between the alternator and the crankshaft pulleys with 10 kg (22 lb) of force.

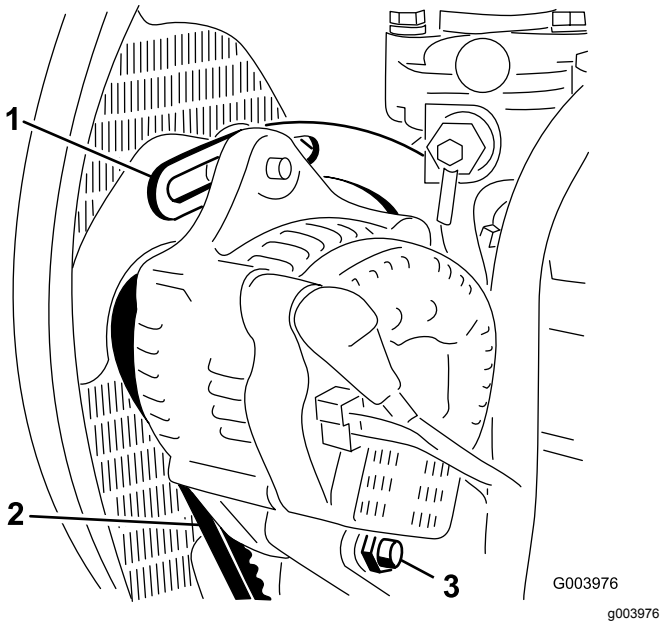

Figure 54

1. Brace
2. Alternator belt
3. Pivot bolt

Note: The belt should deflect 11 mm (0.04 inch).

3. If the deflection is incorrect, proceed to step 4. If correct, continue operation.
4. Loosen the bolt securing the brace to the engine (Figure 54), the bolt securing the alternator to the brace and the pivot bolt.
5. Insert a pry bar between the alternator and the engine and pry out on the alternator.
6. When you achieve the proper tension, tighten the alternator, brace, and pivot bolts to secure the adjustment.

Hydraulic System Maintenance

Hydraulic System Safety

- Seek immediate medical attention if fluid is injected into skin. Injected fluid must be surgically removed within a few hours by a doctor.
- Ensure that all hydraulic-fluid hoses and lines are in good condition and all hydraulic connections and fittings are tight before applying pressure to the hydraulic system.
- Keep your body and hands away from pinhole leaks or nozzles that eject high-pressure hydraulic fluid.
- Use cardboard or paper to find hydraulic leaks.
- Safely relieve all pressure in the hydraulic system before performing any work on the hydraulic system.

Checking the Hydraulic-Fluid Level

Service Interval: Before each use or daily

The machines reservoir is filled at the factory with approximately 56.7 L (15 US gallons) of high quality hydraulic fluid. The recommended replacement fluid is as follows:

Toro Premium All Season Hydraulic Fluid(Available in 18.9 L (5 US gallon) pails or 208 L (55 US gallon) drums. See the *Parts Catalog* or your Toro Distributor for part numbers.)

Alternate fluids: If the Toro fluid is not available, other fluids may be used provided they meet all the following material properties and industry specifications. We do not recommend the use of synthetic fluid. Consult with your lubricant distributor to identify a satisfactory product.

Note: Use products only from reputable manufactures. Toro does not take responsibility for damage caused by improper substitutions.

High Viscosity Index/Low Pour Point Anti-wear Hydraulic Fluid, ISO VG 46

Material Properties:

Viscosity, ASTM D445	cSt @ 40°C 44 to 48cSt @ 100°C 7.9 to 8.5
Viscosity Index ASTM D2270	140 to 160
Pour Point, ASTM D97	-34°F to -49°F

Industry Specifications:

Vickers I-286-S (Quality Level), Vickers M-2950-S (Quality Level), Denison HF-0

Important: **The ISO VG 46 Multigrade fluid has been found to offer optimal performance in a wide-range of temperature conditions. For operation in consistently high ambient temperatures, 18°C (65°F) to 49°C (120°F), ISO VG 68 hydraulic fluid may offer improved performance.**

Premium Biodegradable Hydraulic Fluid-Mobil EAL EnviroSyn 46H

Important: **Mobil EAL EnviroSyn 46H is the only synthetic biodegradable fluid approved by Toro. This fluid is compatible with the elastomers used in Toro hydraulic systems and is suitable for a wide-range of temperature conditions. This fluid is compatible with conventional mineral oils, but for maximum biodegradability and performance the hydraulic system should be thoroughly flushed of conventional fluid. The oil is available in 19 L (5 US gallons) containers or 208 L (55 US gallons) drums from your Mobil Distributor.**

Note: Many hydraulic fluids are almost colorless, making it difficult to spot leaks. A red dye additive for the hydraulic system oil is available in 20 ml (2/3 oz) bottles. 1 bottle is sufficient for 15 to 23 L (4 to 6 US gallons) of hydraulic oil. Order Part No. 44-2500 from your Toro Distributor.

1. Position the machine on a level surface, lower the cutting decks, and turn the key in the switch to the OFF position.
2. Check the hydraulic-fluid level (Figure 55).

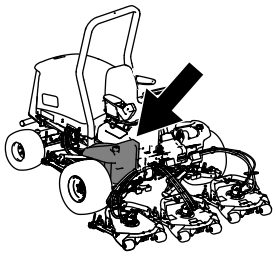

g194205

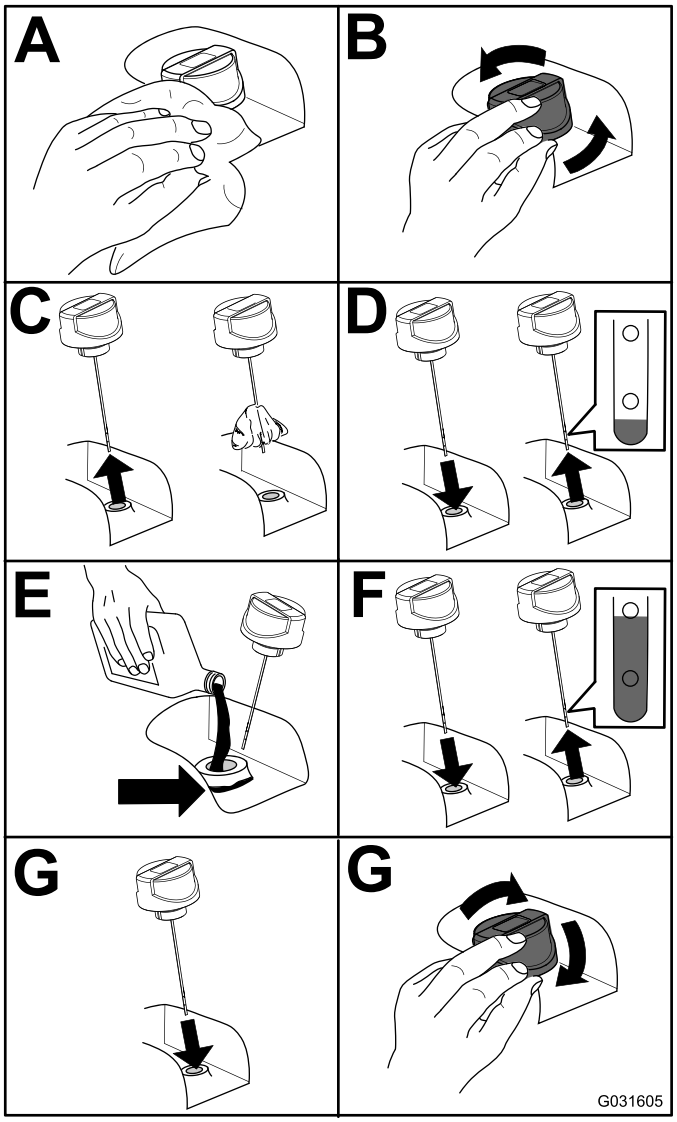

g031605

Figure 55

Changing the Hydraulic Fluid

Service Interval: Every 800 hours

If fluid becomes contaminated, contact your Toro Distributor because the system must be flushed. Contaminated fluid looks milky or black when compared to clean oil.

1. Turn the key in the switch to the OFF position and raise the hood.
2. Place a large drain pan under the fitting secured to the bottom of the hydraulic-fluid reservoir (Figure 56).

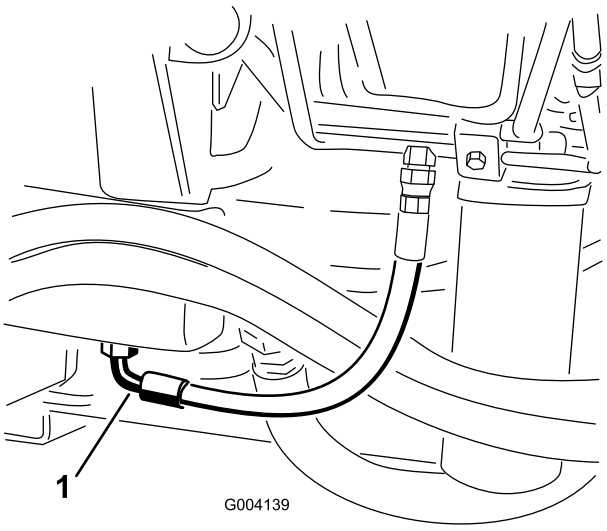

g004139

Figure 56

1. Hose

3. Disconnect the hose from the bottom of the fitting and let the hydraulic fluid flow into the drain pan.
4. Install the hose when hydraulic fluid stops draining.
5. Fill the reservoir with approximately 56.7 L (15 US gallons) of hydraulic fluid; refer to Changing the Hydraulic Fluid (page 52).

   Important: **Use only hydraulic fluids specified. Other fluids could cause system damage.**
6. Install the reservoir cap.
7. Turn the key in the switch to the ON position, start the engine, use all of the hydraulic controls to distribute hydraulic fluid throughout the system, and check for leaks.
8. Turn the key in the switch to the OFF position.
9. Check the level of the hydraulic fluid and add enough to raise level to the Full mark on the dipstick.

Important: **Do not overfill.**

Replacing the Hydraulic Filters

The hydraulic system is equipped with a service-interval indicator (Figure 57). With the engine running, view the indicator, it should be in the green zone. When the indicator is in the red zone, change the hydraulic filters.

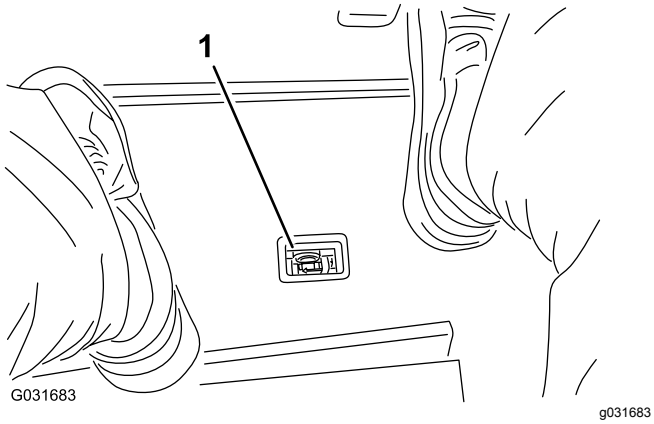

Figure 57

1. Hydraulic-filter restriction indicator

Important: **Use of any other filters may void the warranty on some components.**

1. Position the machine on a level surface, lower the cutting decks, turn the key in the switch to the OFF position, engage the parking brake, and remove the key.
2. Replace both of the hydraulic filters (Figure 58).

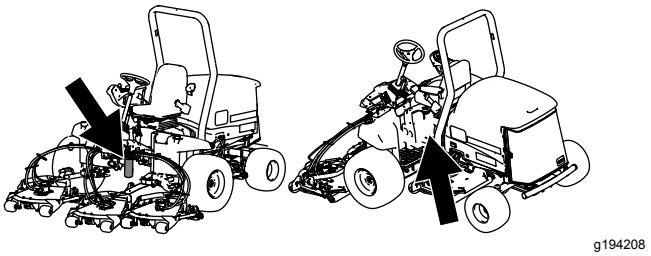

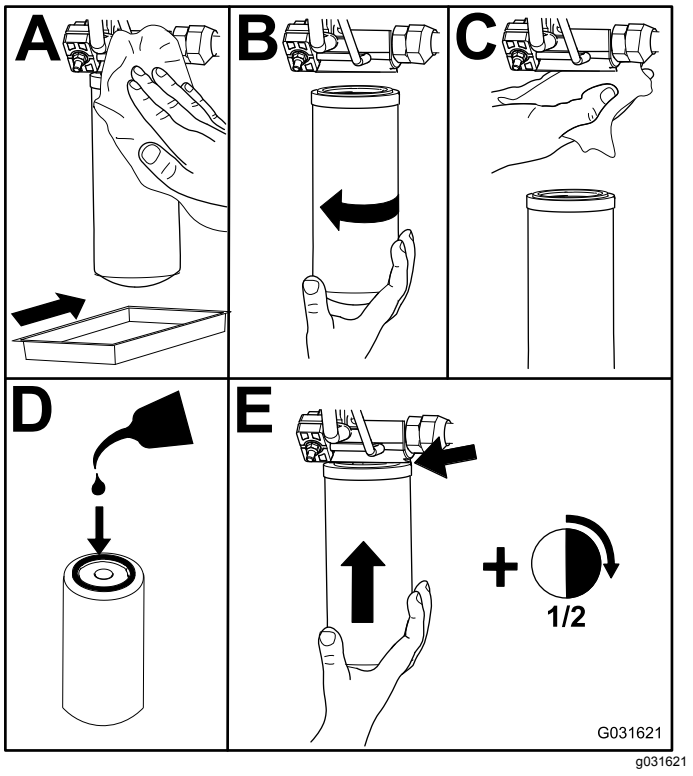

Figure 58

3. Turn the key in the switch to the ON position, start the engine, and let it run for about 2 minutes to purge air from the system.
4. Turn the key in the switch to the OFF position and check for leaks.

Checking the Hydraulic Lines and Hoses

Service Interval: Before each use or daily

Make all necessary repairs before operating.

⚠ WARNING

Hydraulic fluid escaping under pressure can penetrate skin and cause injury.

- **Make sure that all hydraulic-fluid hoses and lines are in good condition and all hydraulic connections and fittings are tight before applying pressure to the hydraulic system.**
- **Keep your body and hands away from pinhole leaks or nozzles that eject high-pressure hydraulic fluid.**
- **Use cardboard or paper to find hydraulic leaks.**
- **Safely relieve all pressure in the hydraulic system before performing any work on the hydraulic system.**
- **Get immediate medical help if fluid is injected into skin.**

Testing the Hydraulic-System Pressure

Use the hydraulic system test ports to test the pressure in the hydraulic circuits. Contact your authorized Toro distributor for assistance.

Hydraulic Valve Solenoid Functions

Use the list below to identify and describe the different functions of the solenoids in the hydraulic manifold. Each solenoid must be energized to allow function to occur.

Solenoid	Function
PRV2	Front mower circuit
PRV1	Rear mower circuit
PRV	Lift/lower cutting decks
S1	Lower cutting decks
S2	Lower cutting decks

Cutting Unit Maintenance

Separating the Cutting Unit from the Traction Unit

1. Position the machine on a level surface, lower the cutting units to the floor, turn the key in the switch to the OFF position, and engage the parking brake.
2. Disconnect and remove the hydraulic motor from the cutting unit (Figure 59). Cover the top of the spindle to prevent contamination.

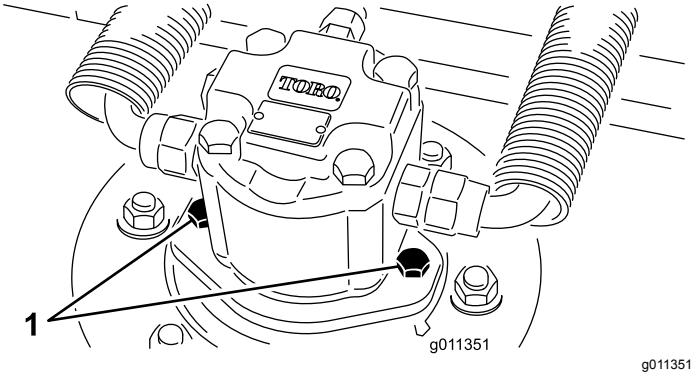

Figure 59

1. Motor-mounting screws

3. Remove the lynch pin securing the deck-carrier frame to the lift-arm pivot pin (Figure 60).

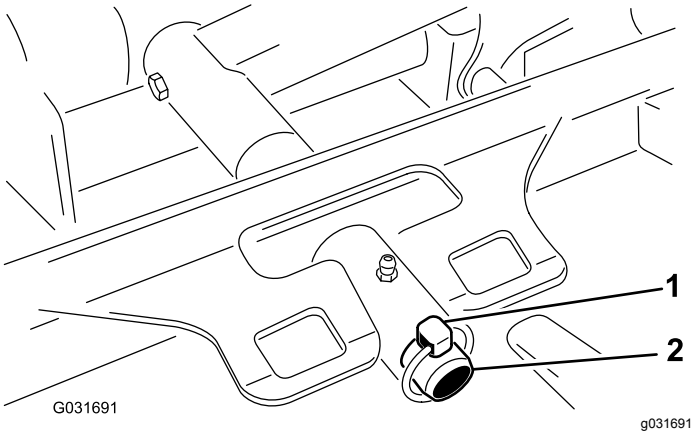

Figure 60

1. Lynch pin
2. Lift-arm pivot pin

4. Roll the cutting unit away from the traction unit.

Mounting the Cutting Units to the Traction Unit

1. Position the machine on a level surface and turn the key in the switch to the OFF position.
2. Move the cutting unit into position in front of the traction unit.
3. Slide the deck-carrier frame onto the lift-arm pivot pin and secure it with the lynch pin (Figure 60).
4. Install the hydraulic motor to the deck (Figure 59). Make sure that the O-ring is in position and not damaged.
5. Grease the spindle.

Servicing the Front Roller

Inspect the front roller for wear, excess wobble, or binding. Service or replace the roller or components if any of these conditions exist.

Disassembling the Front Roller

1. Remove the roller-mounting bolt (Figure 61).
2. Insert a punch through the end of the roller housing and drive the opposite bearing out by alternating taps to the opposite side of inner bearing race. There should be a 1.5 mm (0.060 inch) lip of inner race exposed.

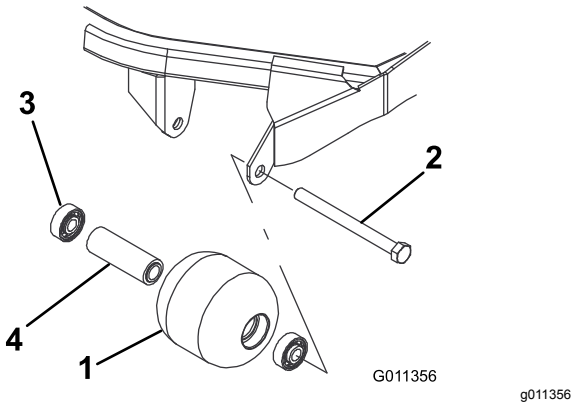

Figure 61

1. Front roller
2. Mounting bolt
3. Bearing
4. Bearing spacer

3. Push the second bearing out in press.
4. Inspect the roller housing, bearings, and bearing spacer for damage (Figure 61). Replace any damaged components and assemble them.

Assembling the Front Roller

1. Press the first bearing into the roller housing (Figure 61). Press on the outer race only or equally on the inner and outer race.
2. Insert the spacer (Figure 61).
3. Press the second bearing into the roller housing (Figure 61). Pressing equally on the inner and outer race until the inner race comes in contact with the spacer.
4. Install the roller assembly into the cutting-unit frame.
5. Verify that there is no more than a 1.5 mm (0.060 inch) gap between roller assembly and the roller mount brackets of the cutting-unit frame. If there is a gap over 1.5 mm (0.060 inch), install enough 5/8-inch diameter washers to take up the slop.

   Important: **Securing the roller assembly with a gap larger than 1.5 mm (0.060 inch) creates a side load on the bearing and can lead to premature bearing failure**
6. Torque the mounting bolt to 108 N·m (80 ft-lb).

Blade Maintenance

Blade Safety

A worn or damaged blade can break, and a piece of the blade could be thrown toward you or bystanders, resulting in serious personal injury or death.

- Inspect the blade periodically for wear or damage.
- Use care when checking the blades. Wrap the blades or wear gloves, and use caution when servicing the blades. Only replace or sharpen the blades; never straighten or weld them.
- On multi-bladed machines, take care as rotating 1 blade can cause other blades to rotate.

Servicing the Blade Plane

The rotary deck comes from the factory preset at 5 cm (2 inches) height of cut and blade rake of 7.9 mm (0.310 inch). The left and right heights are also preset to within ± 0.7 mm (0.030 inch) of the other.

The cutting deck is designed to withstand blade impacts without deformation of the chamber. If a solid object is struck, inspect the blade for damage and the blade plane for accuracy.

Inspecting the Blade Plane

1. Remove the hydraulic motor from the cutting deck and remove the cutting deck from the tractor.
2. Use a hoist (or minimum of 2 people) and place the cutting deck on a flat table.
3. Mark 1 end of the blade with a paint pen or marker. Use this end of the blade to check all heights.
4. Position the cutting edge of the marked end of the blade at 12 o'clock (straight ahead in the direction of mowing) (Figure 62) and measure height from table to cutting edge of blade.

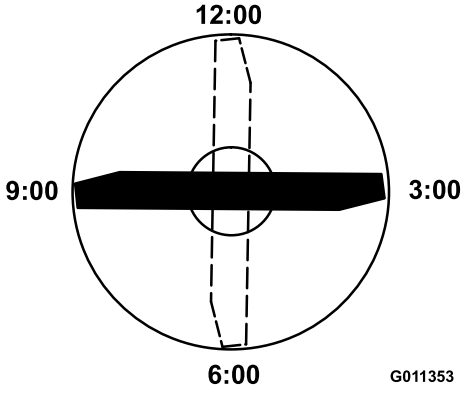

Figure 62

5. Rotate the marked end of the blade to the 3 and 9 o'clock positions (Figure 62) and measure the heights.
6. Compare the 12 o'clock measured height to the height-of-cut setting. It should be within 0.7 mm (0.030 inch). The 3 and 9 o'clock heights should be 1.6 to 6.0 mm (0.06 to 0.24 inch) higher than the 12 o'clock setting and within 1.6 to 6.0 mm (0.06 to 0.24 inch) of each other.

Note: If any of these measurements are not within specification, proceed to Adjusting the Blade Plane (page 56).

Adjusting the Blade Plane

Start with the front adjustment (change 1 bracket at a time).

1. Remove the height-of-cut bracket (front, left, or right) from the deck frame (Figure 63).
2. Adjust 1.5 mm (0.060 inch) shims and/or 0.7 mm (0.030 inch) shim between the deck frame and bracket to achieve the desired height setting (Figure 63).

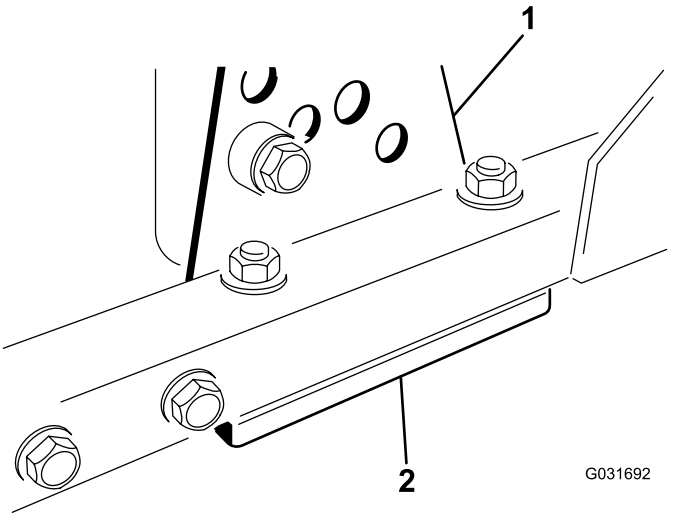

Figure 63

1. Height-of-cut bracket
2. Shims

3. Install the height-of-cut bracket to the deck frame with the remaining shims assembled below the height-of-cut bracket.
4. Secure the socket-head bolt/spacer and flange nut.

   Note: Socket-head bolt/spacer are held together with thread-locking adhesive to prevent the spacer from falling inside the deck frame.
5. Verify the 12 o'clock height and adjust if needed.
6. Determine if only 1 or both (right and left) height-of-cut brackets need to be adjusted. If the 3 or 9 o'clock side is 1.6 to 6.0 mm (0.06 to

0.24 inch) higher than the new front height then no adjustment is needed for that side. Adjust the other side to within 1.6 to 6.0 mm (0.06 to 0.24 inch) of the correct side.

7. Adjust the right and/or left height-of-cut brackets by repeating steps 1 through 3.
8. Secure the carriage bolts and flange nuts.
9. Again, verify the 12, 3, and 9 o'clock heights.

Removing and Installing a Blade

Replace the blade if a solid object is hit, the blade is out of balance, or if the blade is bent. Always use genuine Toro replacement blades to be sure of safety and optimum performance. Never use replacement blades made by other manufacturers because they could be dangerous.

1. Raise the cutting deck to the highest position, turn the key in the ignition switch to the OFF position, and engage the parking brake. Block the cutting deck to prevent it from falling accidentally.
2. Grasp the end of the blade using a rag or thickly padded glove. Remove the blade bolt, anti-scalp cup, and blade from the spindle shaft (Figure 64).

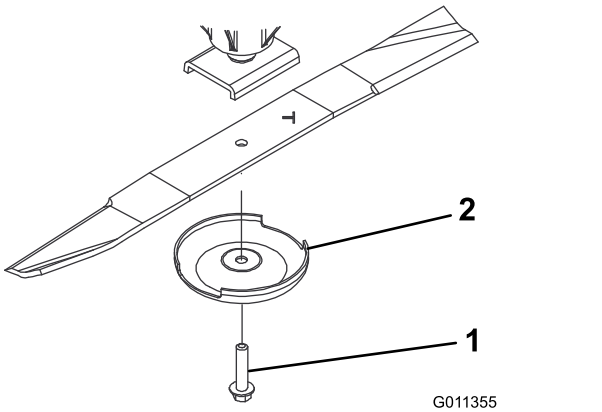

Figure 64

1. Blade bolt
2. Anti-scalp cup

3. Install the blade, sail facing toward the cutting deck, with the anti-scalp cup and blade bolt (Figure 64). Tighten the blade bolt to 115 to 149 N·m (85 to 110 ft-lb).

Inspecting and Sharpening the Blade

1. Raise the cutting deck to the highest position, turn the key in the ignition switch to the OFF position, and engage the parking brake.
2. Block the cutting deck to prevent it from falling accidentally.
3. Examine the cutting ends of the blade carefully, especially where the flat and curved parts of the blade meet (Figure 65).

   Note: Since sand and abrasive material can wear away the metal that connects the flat and curved parts of the blade, check the blade before using the machine.
4. If wear is noticed (Figure 65), replace the blade; refer to Removing and Installing a Blade (page 57).

⚠ DANGER

If the blade is allowed to wear, a slot will form between the sail and flat part of the blade (Figure 64). Eventually a piece of the blade may break off and be thrown from under the housing, possibly resulting in serious injury to yourself or bystanders.

- **Inspect the blade periodically for wear or damage.**
- **Always replace a worn or damaged blade.**

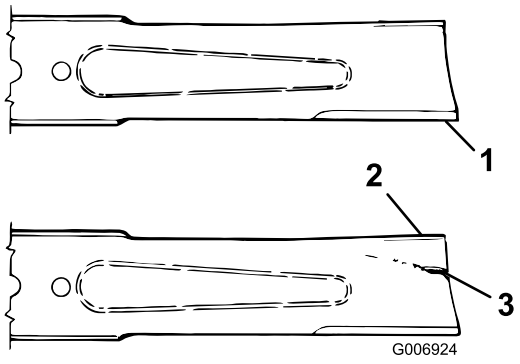

Figure 65

1. Cutting edge
2. Sail
3. Wear/slot/crack

5. Inspect the cutting edges of all blades. Sharpen the cutting edges if they are dull or nicked. Sharpen only the top of the cutting edge and maintain the original cutting angle to make sure that it is sharp (Figure 66).

6. If dull or nicked, sharpen only the top cutting edge while maintaining the original cutting angle (Figure 66).

   Note: The blade will remain balanced if the same amount of metal is removed from both cutting edges.

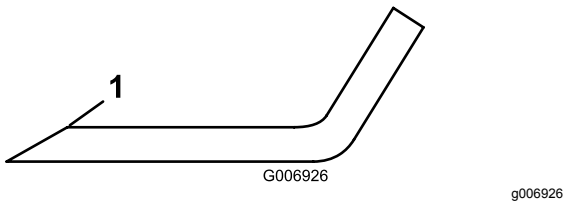

g006926

Figure 66

1. Sharpen at this angle only

7. To check the blade for being straight and parallel, lay the blade on a level surface and check its ends.

   Note: Position the ends of the blade slightly lower than the center, and the cutting edge lower than the heel of the blade. This blade produces a good quality of cut and requires minimal power from the engine. By contrast a blade that is higher at the ends than the center, or if cutting edge is higher than the heel, the blade is bent or warped and must be replaced.

8. Install the blade, sail facing toward cutting deck, with the anti-scalp cup and blade bolt. Torque the blade bolt to 115 to 149 N·m (85 to 110 ft-lb).

Storage

Preparing the Machine for Storage

Preparing the Traction Unit

1. Thoroughly clean the traction unit, cutting units, and engine.
2. Check the tire pressure. Inflate all traction unit tires to 83 to 103 kPa (12 to 15 psi).
3. Check all fasteners for looseness and tighten them as necessary.
4. Grease all grease fittings and pivot points. Wipe up any excess lubricant.
5. Lightly sand and use touch-up paint on painted areas that are scratched, chipped, or rusted. Repair any dents in the metal body.
6. Service the battery and cables as follows:
   A. Remove the battery terminals from the battery posts.

      Note: Always disconnect the negative terminal first and the positive last. Always connect the positive terminal first and the negative last.

   B. Clean the battery, terminals, and posts with a wire brush and baking soda solution.
   C. Coat the cable terminals and battery posts with Grafo 112X skin-over grease (Part Number 505-47) or petroleum jelly to prevent corrosion.
   D. Slowly recharge the battery every 60 days for 24 hours to prevent lead sulfation of the battery.

Preparing the Engine

1. Drain the engine oil from the oil pan and replace the drain plug.
2. Remove and discard the oil filter. Install a new oil filter.
3. Refill the oil pan with designated quantity of motor oil.
4. Turn the key in the switch to the ON position, start the engine, and run it at idle speed for approximately 2 minutes.
5. Turn the key in the switch to the OFF position.
6. Thoroughly drain all fuel from the fuel tank, lines, and the fuel filter/water separator assembly.
7. Flush the fuel tank with fresh, clean diesel fuel.
8. Secure all fuel-system fittings.

9. Thoroughly clean and service the air-cleaner assembly.
10. Seal the air-cleaner inlet and the exhaust outlet with weatherproof tape.
11. Check the antifreeze protection and add as needed for expected minimum temperature in your area.

Storing the Cutting Units

If a cutting unit is separated from the traction unit for any length of time, install a spindle plug in the top of the spindle to protect the spindle from dust and water.

Notes:

Notes:

European Privacy Notice

The Information Toro Collects
Toro Warranty Company (Toro) respects your privacy. In order to process your warranty claim and contact you in the event of a product recall, we ask you to share certain personal information with us, either directly or through your local Toro company or dealer.

The Toro warranty system is hosted on servers located within the United States where privacy law may not provide the same protection as applies in your country.

BY SHARING YOUR PERSONAL INFORMATION WITH US, YOU ARE CONSENTING TO THE PROCESSING OF YOUR PERSONAL INFORMATION AS DESCRIBED IN THIS PRIVACY NOTICE.

The Way Toro Uses Information
Toro may use your personal information to process warranty claims, to contact you in the event of a product recall and for any other purpose which we tell you about. Toro may share your information with Toro's affiliates, dealers or other business partners in connection with any of these activities. We will not sell your personal information to any other company. We reserve the right to disclose personal information in order to comply with applicable laws and with requests by the appropriate authorities, to operate our systems properly or for our own protection or that of other users.

Retention of your Personal Information
We will keep your personal information as long as we need it for the purposes for which it was originally collected or for other legitimate purposes (such as regulatory compliance), or as required by applicable law.

Toro's Commitment to Security of Your Personal Information
We take reasonable precautions in order to protect the security of your personal information. We also take steps to maintain the accuracy and current status of personal information.

Access and Correction of your Personal Information
If you would like to review or correct your personal information, please contact us by email at legal@toro.com.

Australian Consumer Law

Australian customers will find details relating to the Australian Consumer Law either inside the box or at your local Toro Dealer.

The Toro Warranty

A Two-Year Limited Warranty

Conditions and Products Covered

The Toro Company and its affiliate, Toro Warranty Company, pursuant to an agreement between them, jointly warrant your Toro Commercial product ("Product") to be free from defects in materials or workmanship for two years or 1500 operational hours*, whichever occurs first. This warranty is applicable to all products with the exception of Aerators (refer to separate warranty statements for these products). Where a warrantable condition exists, we will repair the Product at no cost to you including diagnostics, labor, parts, and transportation. This warranty begins on the date the Product is delivered to the original retail purchaser.
* Product equipped with an hour meter.

Instructions for Obtaining Warranty Service

You are responsible for notifying the Commercial Products Distributor or Authorized Commercial Products Dealer from whom you purchased the Product as soon as you believe a warrantable condition exists. If you need help locating a Commercial Products Distributor or Authorized Dealer, or if you have questions regarding your warranty rights or responsibilities, you may contact us at:

Toro Commercial Products Service Department
Toro Warranty Company
8111 Lyndale Avenue South
Bloomington, MN 55420-1196

952–888–8801 or 800–952–2740
E-mail: commercial.warranty@toro.com

Owner Responsibilities

As the Product owner, you are responsible for required maintenance and adjustments stated in your *Operator's Manual*. Failure to perform required maintenance and adjustments can be grounds for disallowing a warranty claim.

Items and Conditions Not Covered

Not all product failures or malfunctions that occur during the warranty period are defects in materials or workmanship. This warranty does not cover the following:

- Product failures which result from the use of non-Toro replacement parts, or from installation and use of add-on, or modified non-Toro branded accessories and products. A separate warranty may be provided by the manufacturer of these items.
- Product failures which result from failure to perform recommended maintenance and/or adjustments. Failure to properly maintain your Toro product per the Recommended Maintenance listed in the *Operator's Manual* can result in claims for warranty being denied.
- Product failures which result from operating the Product in an abusive, negligent, or reckless manner.
- Parts subject to consumption through use unless found to be defective. Examples of parts which are consumed, or used up, during normal Product operation include, but are not limited to, brake pads and linings, clutch linings, blades, reels, rollers and bearings (sealed or greasable), bed knives, spark plugs, castor wheels and bearings, tires, filters, belts, and certain sprayer components such as diaphragms, nozzles, and check valves, etc.
- Failures caused by outside influence. Conditions considered to be outside influence include, but are not limited to, weather, storage practices, contamination, use of unapproved fuels, coolants, lubricants, additives, fertilizers, water, or chemicals, etc.
- Failure or performance issues due to the use of fuels (e.g. gasoline, diesel, or biodiesel) that do not conform to their respective industry standards.
- Normal noise, vibration, wear and tear, and deterioration.
- Normal "wear and tear" includes, but is not limited to, damage to seats due to wear or abrasion, worn painted surfaces, scratched decals or windows, etc.

Parts

Parts scheduled for replacement as required maintenance are warranted for the period of time up to the scheduled replacement time for that part. Parts replaced under this warranty are covered for the duration of the original product warranty and become the property of Toro. Toro will make the final decision whether to repair any existing part or assembly or replace it. Toro may use remanufactured parts for warranty repairs.

Deep Cycle and Lithium-Ion Battery Warranty:

Deep cycle and Lithium-Ion batteries have a specified total number of kilowatt-hours they can deliver during their lifetime. Operating, recharging, and maintenance techniques can extend or reduce total battery life. As the batteries in this product are consumed, the amount of useful work between charging intervals will slowly decrease until the battery is completely worn out. Replacement of worn out batteries, due to normal consumption, is the responsibility of the product owner. Battery replacement may be required during the normal product warranty period at owner's expense. Note: (Lithium-Ion battery only): A Lithium-Ion battery has a part only prorated warranty beginning year 3 through year 5 based on the time in service and kilowatt hours used. Refer to the *Operator's Manual* for additional information.

Maintenance is at Owner's Expense

Engine tune-up, lubrication, cleaning and polishing, replacement of filters, coolant, and completing recommended maintenance are some of the normal services Toro products require that are at the owner's expense.

General Conditions

Repair by an Authorized Toro Distributor or Dealer is your sole remedy under this warranty.

Neither The Toro Company nor Toro Warranty Company is liable for indirect, incidental or consequential damages in connection with the use of the Toro Products covered by this warranty, including any cost or expense of providing substitute equipment or service during reasonable periods of malfunction or non-use pending completion of repairs under this warranty. Except for the Emissions warranty referenced below, if applicable, there is no other express warranty. All implied warranties of merchantability and fitness for use are limited to the duration of this express warranty.

Some states do not allow exclusions of incidental or consequential damages, or limitations on how long an implied warranty lasts, so the above exclusions and limitations may not apply to you. This warranty gives you specific legal rights, and you may also have other rights which vary from state to state.

Note regarding engine warranty:

The Emissions Control System on your Product may be covered by a separate warranty meeting requirements established by the U.S. Environmental Protection Agency (EPA) and/or the California Air Resources Board (CARB). The hour limitations set forth above do not apply to the Emissions Control System Warranty. Refer to the Engine Emission Control Warranty Statement supplied with your product or contained in the engine manufacturer's documentation for details

Countries Other than the United States or Canada

Customers who have purchased Toro products exported from the United States or Canada should contact their Toro Distributor (Dealer) to obtain guarantee policies for your country, province, or state. If for any reason you are dissatisfied with your Distributor's service or have difficulty obtaining guarantee information, contact the Toro importer.

374-0253 Rev D

California Proposition 65 Warning Information

What is this warning?

You may see a product for sale that has a warning label like the following:



WARNING: Cancer and Reproductive Harm—www.p65Warnings.ca.gov.

What is Prop 65?

Prop 65 applies to any company operating in California, selling products in California, or manufacturing products that may be sold in or brought into California. It mandates that the Governor of California maintain and publish a list of chemicals known to cause cancer, birth defects, and/or other reproductive harm. The list, which is updated annually, includes hundreds of chemicals found in many everyday items. The purpose of Prop 65 is to inform the public about exposure to these chemicals.

Prop 65 does not ban the sale of products containing these chemicals but instead requires warnings on any product, product packaging, or literature with the product. Moreover, a Prop 65 warning does not mean that a product is in violation of any product safety standards or requirements. In fact, the California government has clarified that a Prop 65 warning "is not the same as a regulatory decision that a product is 'safe' or 'unsafe.'" Many of these chemicals have been used in everyday products for years without documented harm. For more information, go to https://oag.ca.gov/prop65/faqs-view-all.

A Prop 65 warning means that a company has either (1) evaluated the exposure and has concluded that it exceeds the "no significant risk level"; or (2) has chosen to provide a warning based on its understanding about the presence of a listed chemical without attempting to evaluate the exposure.

Does this law apply everywhere?

Prop 65 warnings are required under California law only. These warnings are seen throughout California in a wide range of settings, including but not limited to restaurants, grocery stores, hotels, schools, and hospitals, and on a wide variety of products. Additionally, some online and mail order retailers provide Prop 65 warnings on their websites or in catalogs.

How do the California warnings compare to federal limits?

Prop 65 standards are often more stringent than federal and international standards. There are various substances that require a Prop 65 warning at levels that are far lower than federal action limits. For example, the Prop 65 standard for warnings for lead is 0.5 µg/day, which is well below the federal and international standards.

Why don't all similar products carry the warning?

- Products sold in California require Prop 65 labelling while similar products sold elsewhere do not.
- A company involved in a Prop 65 lawsuit reaching a settlement may be required to use Prop 65 warnings for its products, but other companies making similar products may have no such requirement.
- The enforcement of Prop 65 is inconsistent.
- Companies may elect not to provide warnings because they conclude that they are not required to do so under Prop 65; a lack of warnings for a product does not mean that the product is free of listed chemicals at similar levels.

Why does Toro include this warning?

Toro has chosen to provide consumers with as much information as possible so that they can make informed decisions about the products they buy and use. Toro provides warnings in certain cases based on its knowledge of the presence of one or more listed chemicals without evaluating the level of exposure, as not all the listed chemicals provide exposure limit requirements. While the exposure from Toro products may be negligible or well within the "no significant risk" range, out of an abundance of caution, Toro has elected to provide the Prop 65 warnings. Moreover, if Toro does not provide these warnings, it could be sued by the State of California or by private parties seeking to enforce Prop 65 and subject to substantial penalties.