FORM NO. 3322–408

TORO®

ProLine

37” Recycler®

for Mid-Size Traction Unit

Model No. 30137 – 990001 & Up

Operator’s Manual

IMPORTANT: Read this manual carefully. It contains information about your safety and the safety of others. Also become familiar with the controls and their proper use before you operate the product.

Introduction

We want you to be completely satisfied with your new product, so feel free to contact your local Authorized Service Dealer for help with service, genuine replacement parts, or other information you may require.

Whenever you contact your Authorized Service Dealer or the factory, always know the model and serial numbers of your product. These numbers will help the Service Dealer or Service Representative provide exact information about your specific product. You will find the model and serial number plate located in a unique place on the product as shown below.

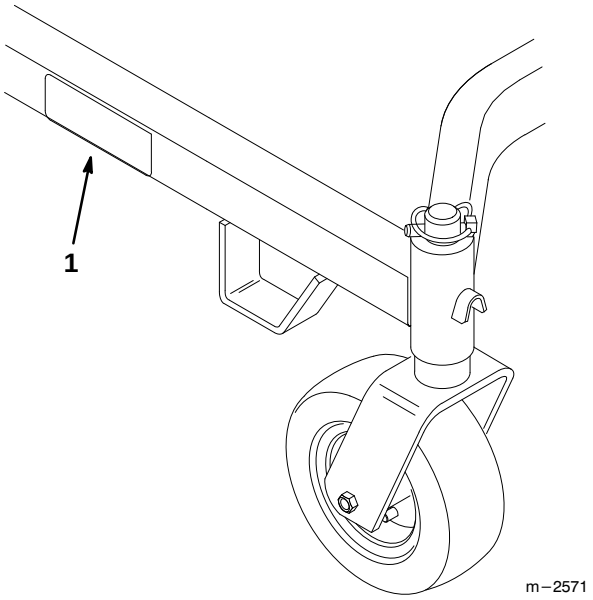

1. Model and Serial Number Plate

For your convenience, write the product model and serial numbers in the space below.

Model No: _____

Serial No. _____

The warning system in this manual identifies potential hazards and has special safety messages that help you and others avoid personal injury, even death. DANGER, WARNING and CAUTION are signal words used to identify the level of hazard. However, regardless of the hazard, be extremely careful.

DANGER signals an extreme hazard that will cause serious injury or death if the recommended precautions are not followed.

WARNING signals a hazard that may cause serious injury or death if the recommended precautions are not followed.

CAUTION signals a hazard that may cause minor or moderate injury if the recommended precautions are not followed.

Two other words are also used to highlight information. “Important” calls attention to special mechanical information and “Note” emphasizes general information worthy of special attention.

The left and right side of the machine is determined by sitting on the seat in the normal operator’s position.

Printed in USA

Contents

	Page
Safety and Instruction Decals	2
Installation	3
Loose Parts	3
Installing the Castor Wheels	4
Installing the Carrier Frame to the Traction Unit	5
Installing the Cutting Deck	6
Installing the Drive Belt	6
Operation	8
Side Discharge or Mulch Grass	8
Engaging the Mower Blades (PTO)	8
Adjusting the Height-of-Cut	9
Tips for Mowing Grass	10
Maintenance	11
Service Interval Chart	11
Cutting Blades	11
Correcting Cutting Unit Mismatch	14
Setting the Front-to-Rear Pitch	14
Setting the Side-to-Side Leveling	15
Greasing the Bearings and Bushings	16
Replacing the Deck Belt	16
Replacing the Drive Belt	17
Converting the Mower to Side Discharge Mowing	18
Replacing the Castor Wheel Fork Bushings	20
Servicing the Castor Wheels and Bearings	21
Storage	21
Troubleshooting	22

Safety and Instruction Decals

Safety decals and instructions are easily visible to the operator and are located near any area of potential danger. Replace any decal that is damaged or lost.

See Traction Unit Operator's Manual for Glossary of Safety Symbols

ON TOP OF CUTTING UNIT (Part No. 66−1340)



ON TOP OF CUTTING UNIT (Part No. 68−8340)

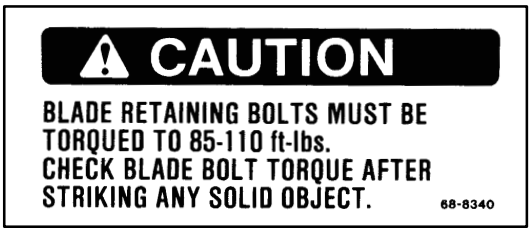

ON DISCHARGE COVER (Part No. 82−7490)



ON DECK COVER (Part No. 67−5360)



ABOVE DISCHARGE OPENING (Part No. 68−3650)



ON TOP OF CUTTING UNIT (Part No. 85−7080)

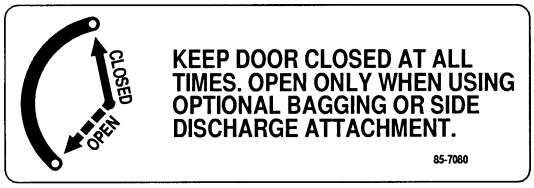

ON DEFLECTOR (Part No. 54−9220)



ON LEFT SIDE OF CUTTING UNIT (Part No. 43−8480)



ON SIDES OF CARRIER FRAME (Part No. 85−7450), Left Side (Part No. 85−7460), Right Side

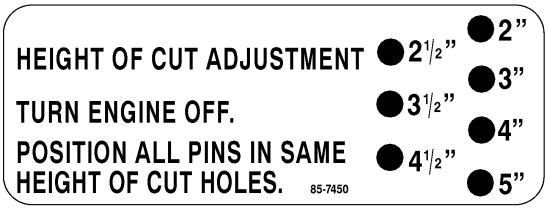

Installation

Loose Parts

Note: Use the chart below to identify parts used for assembly.

DESCRIPTION	QTY.	USE
Castor Wheel Assembly	2	Install castor wheels to carrier frame
Thrust Washer	8	
Spacer	2	
Retaining Ring	2	
Right-hand Angle Bracket	1	Mount angle brackets to traction unit
Left-hand Angle Bracket	1	
Flange Bolt, 1/2”-13 x 1” (25 mm)	6	
Flange Locknut, 1/2”-13	6	
Carrier Frame	1	Install carrier frame to angle brackets
Hex Head Bolt, 3/8”-16 x 1.75” (44 mm)	4	
Hex Head Screw, 3/8”-16 x .88” (22 mm)	4	
Locknut, 3/8”-16	4	
Flat Washer, 3/8”	4	
Shim	2	
Adjusting Shaft	2	Install adjusting shafts
Jam Nut, 1/2”-13	4	
Flat Washer, 1/2” (13 mm)	2	
Spring	2	
Bushing	2	
Discharge Deflector Assembly	1	Install for side-discharge cutting
Deck Drive Belt	1	Install on cutting unit and traction unit
1”–4” Height-of-cut Decal, R.H.	1	Install over 2”–5” Height-of-cut Decal (for Traction Units with serial number 590000 and below only)
1”–4” Height-of-cut Decal, L.H.	1	
Operator’s Manual	1	Read before operating
Parts Catalog	1	Ordering parts

Installing the Castor Wheels

1. Place two (2) thrust washers and the spacer onto the castor wheel fork (Fig. 1).

2. Insert the castor wheel fork into the carrier frame mounting tube (Fig. 1).

3. Install two (2) thrust washers onto the castor wheel fork, then secure with a retaining ring (Fig. 1).

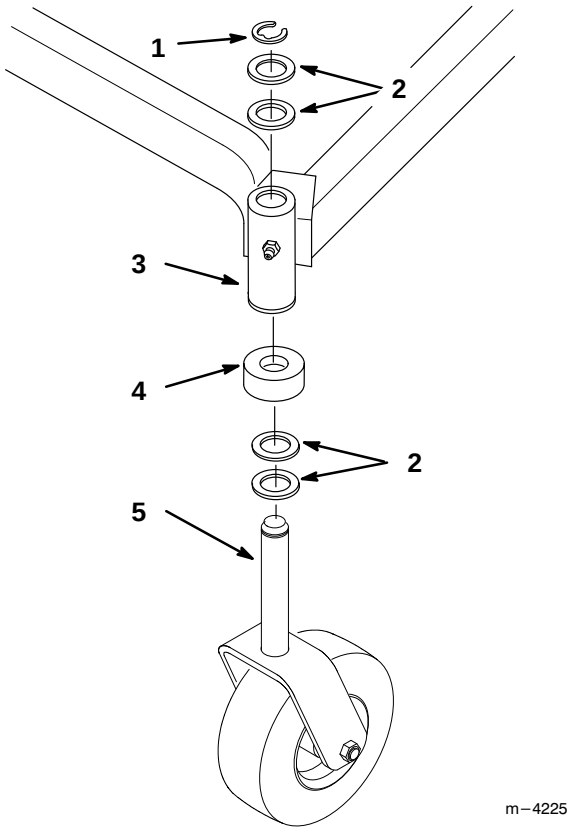

Figure 1

1. Retaining Ring
2. Thrust Washers
3. Carrier Frame Mounting Tube
4. Spacer
5. Castor Wheel Fork

4. Set the castor wheel tire pressure to 25–30 psi (172–207 kPa).

Installing the Carrier Frame to the Traction Unit

1. Fasten the angle brackets to the traction unit frame with the six (6) 1/2”-13 x 1” (25 mm) hex head flange bolts and flange locknuts. Position the bottom locknuts on the outside of the angle brackets. Torque the fasteners to 60–80 ft.-lbs (81–109 N•M) (Fig 2).

IMPORTANT: When installing the angle brackets on traction units with hydrostatic drive, use the 1/2”-13 x 1-1/4” hex head flange bolts supplied with the traction unit.

2. Attach the carrier frame to the angle brackets with the four (4) 3/8”-16 x 1-3/4” (44 mm) hex head bolts and locknuts. Note that the locknuts must be on the outside of the carrier frame. Leave the locknuts loose to allow movement between the carrier frame and angle brackets (Fig 2).

3. Install the shims between the carrier frame and angle brackets. Align the holes in the shims with the top holes in the carrier frame and angle brackets (Fig. 2).

4. Install the four (4) 3/8”-16 x 7/8” (22 mm) hex head screws with flat washers through the carrier frame and shims, and into the threaded holes in the top of the angle brackets. Torque the hex head screws to 27–33 ft.-lb (37–45 N•m) (Fig. 2).

5. Install the four (4) 3/8”-16 x 1-3/4” (44 mm) hex head bolts and locknuts. Torque to 27–33 ft.-lb (37–45 N•m) (Fig. 2).

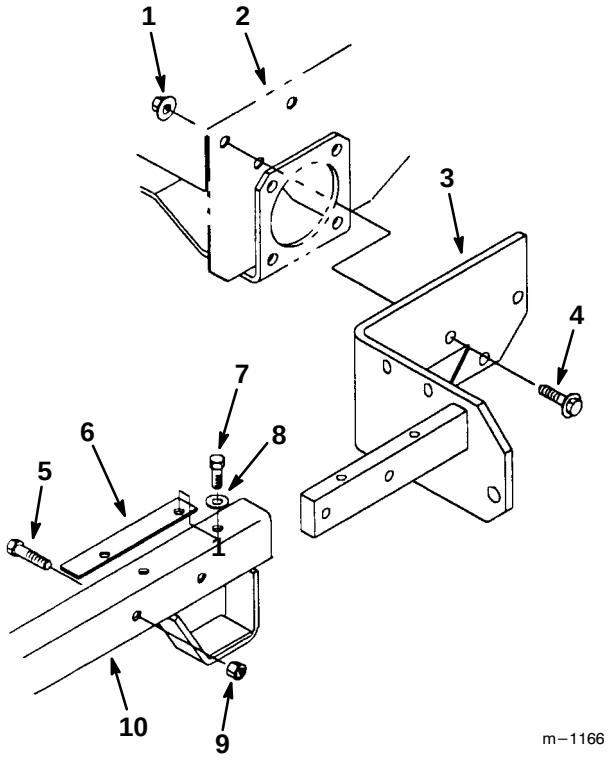

Figure 2

1. 1/2”-13 Flange Locknut
2. Traction Unit Frame
3. Angle Bracket (typical)
4. 1/2”-13 x 1” (25 mm) Hex Head Flange Bolt (gear drive traction units only)
5. 3/8”-16 x 1-3/4” (44 mm) Hex Head Bolt
6. Shim
7. 3/8”-16 x 7/8” (22 mm) Hex Head Screw
8. 3/8” Flat Washer
9. 3/8”-16 Locknut
10. Carrier Frame

Installing the Cutting Deck

1. Position the cutting deck under the carrier frame.
2. Mount the cutting deck to the carrier frame with four (4) clevis pins and hairpin cotters (Fig. 3).

   Note: All four pins must be in the same hole locations to prevent uneven cutting.

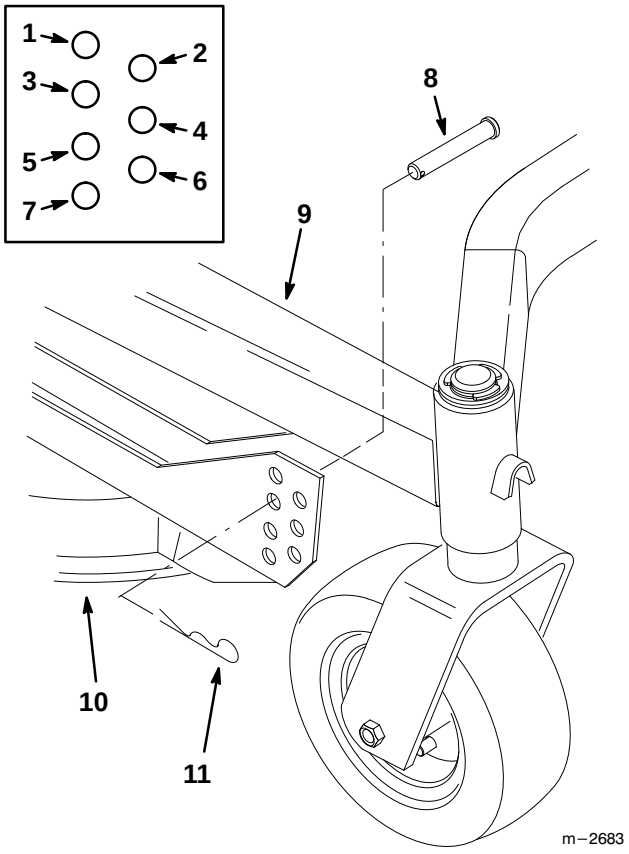

Figure 3

1. 2” (51 mm) Cut Height
2. 2-1/2” (64 mm) Cut Height
3. 3” (76 mm) Cut Height
4. 3-1/2” (89 mm) Cut Height
5. 4” (102 mm) Cut Height
6. 4-1/2” (114 mm) Cut Height
7. 5” (127 mm) Cut Height
8. Clevis Pin
9. Carrier Frame
10. Cutting Deck
11. Hairpin Cotter

Installing the Drive Belt

1. Remove the deck cover from the top of the cutting deck.
2. Install the drive belt around the traction unit drive pulley and the top pulley on the left spindle. The belt must be to the left of the belt guide (Fig. 4).

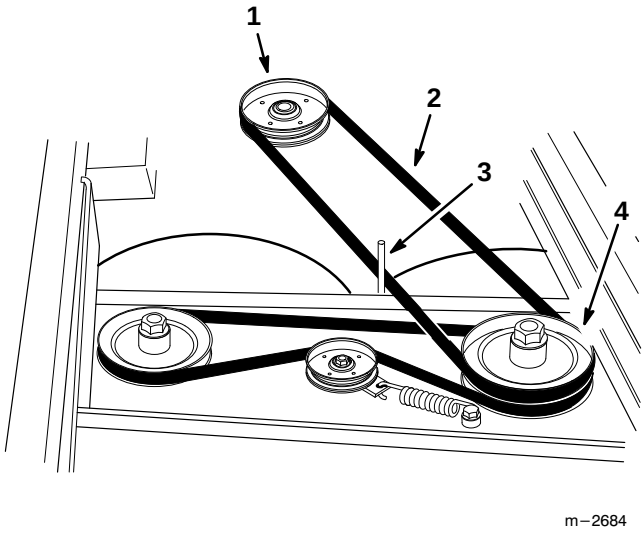

Figure 4

1. Traction Unit Drive Pulley
2. Drive Belt
3. Belt Guide
4. Top Left Spindle Pulley

3. Thread two (2) 1/2” jam nuts approximately 9” (22.8 cm) up on each adjusting shaft (Fig. 5).

4. Slide a 1/2” washer, spring and bushing onto each adjusting shaft. Make sure to install the bushing with the flange end against the spring (Fig. 5).

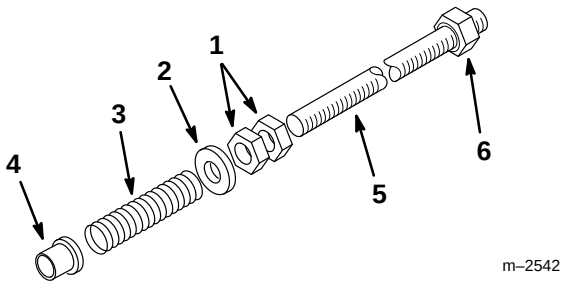

Figure 5

1. 1/2” Jam Nut (2)
2. 1/2” Washer
3. Spring
4. Bushing
5. Adjusting Shaft
6. Locknut (already installed on Adjusting Shaft)

5. Insert the spring end of the adjusting shaft into the hole in the deck mounting bracket. Note that the small end of the bushing fits into the hole in the deck bracket. Insert the locknut end of the adjusting shaft into the carrier frame mounting tab (Fig. 6).

6. To tension the belt, tighten the front jam nut on each adjusting shaft until the springs are compressed to 5” (12.7 cm). Measure the spring compression between the spacer and the bushing (Fig. 6). Readjust if needed.

7. Tighten the rear jam nuts (Fig. 6).

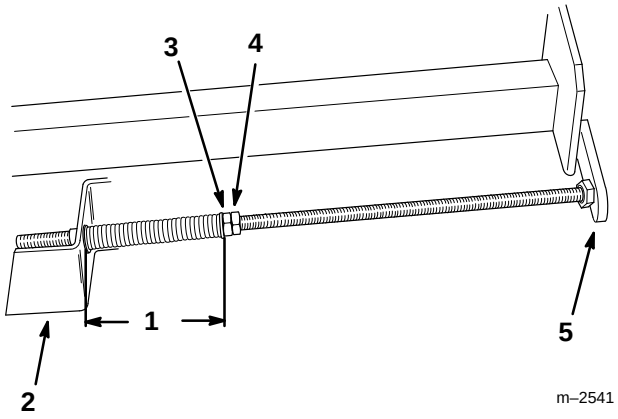

Figure 6

1. 5” between the Spacer and Bushing
2. Deck Mounting Bracket
3. Front Jam Nut
4. Rear Jam Nut
5. Carrier Frame Mounting Tab

8. Check the position of the belt guide. The guide should be positioned about 1/8” (3 mm) away from the belt. Adjust the belt guide as necessary (Fig. 7).

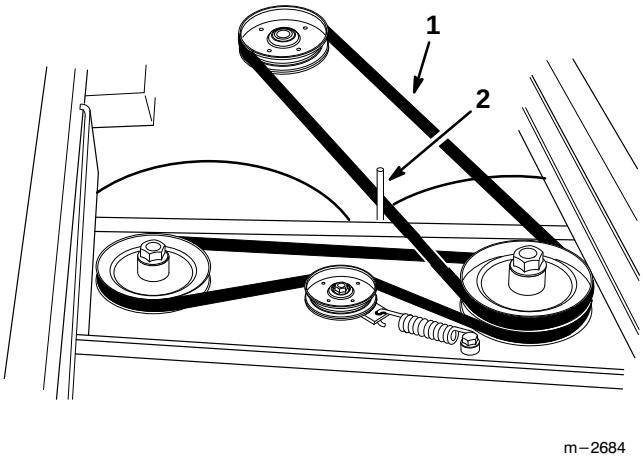

Figure 7

1. Drive Belt
2. Belt Guide

9. Reinstall the deck cover onto the cutting unit.

10. Check the front-to-rear blade pitch. Refer to Setting the Front-to-Rear Pitch in the Maintenance section.

Operation

Side Discharge or Mulch Grass

The mower has a hinged grass deflector that disperses clippings to the side and down toward the turf.

⚠ DANGER

POTENTIAL HAZARD

- **Without the grass deflector or complete grass catcher assembly mounted in place, you and others are exposed to blade contact and thrown debris.**

WHAT CAN HAPPEN

- **Contact with rotating mower blade(s) and thrown debris will cause injury or death.**

HOW TO AVOID THE HAZARD

- **NEVER remove the grass deflector from the mower because the grass deflector routes material down toward the turf. If the grass deflector is ever damaged, replace it immediately.**
- **Never put your hands or feet under the mower.**
- **Never try to clear discharge area or mower blades unless you move the power take-off (PTO) to "OFF" and rotate the ignition key to "OFF." Also remove the key and pull the wire(s) off the spark plug(s).**

Engaging the Mower Blades (PTO)

The blade control switch (PTO) in conjunction with the blade control bail engages and disengages power to the electric clutch and mower blades.

1. Pull on the upper control bar to stop the machine (Fig. 8).

2. To engage the blades, squeeze the blade control bail against the upper control bar (Fig. 8).

3. Press the blade control rocker switch forward to "ON". Hold the blade control bail against the control bar while operating.

Note: Repeat the procedure to engage the mower blades if the blade control bail is released.

4. To disengage the blades, release the blade control bail, or push the blade control switch to the "OFF" position (Fig. 8).

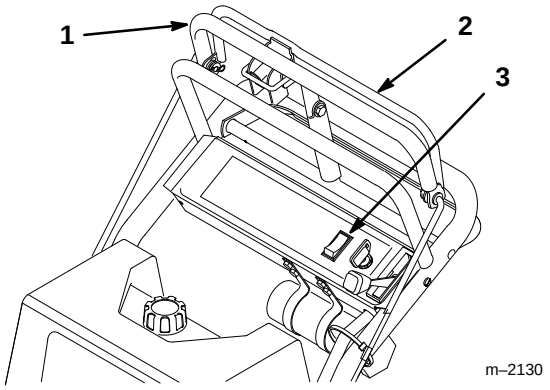

Figure 8

1. Upper Control Bar
2. Blade Control Bail
3. Blade Control Switch (PTO)

Adjusting the Height-of-Cut

The height-of-cut is adjustable from 1” to 4” (26 to 102 mm), or 2” to 5” (51 to 127 mm) depending on the serial number of the traction unit to which the deck is attached. The height-of-cut is adjustable in 1/2-inch (13 mm) increments by relocating the clevis pins in different hole locations in brackets at each corner of the cutting unit (Fig. 3).

Stop the engine before adjusting the height-of-cut.

Note: All four clevis pins must be in the same hole location for even cutting.

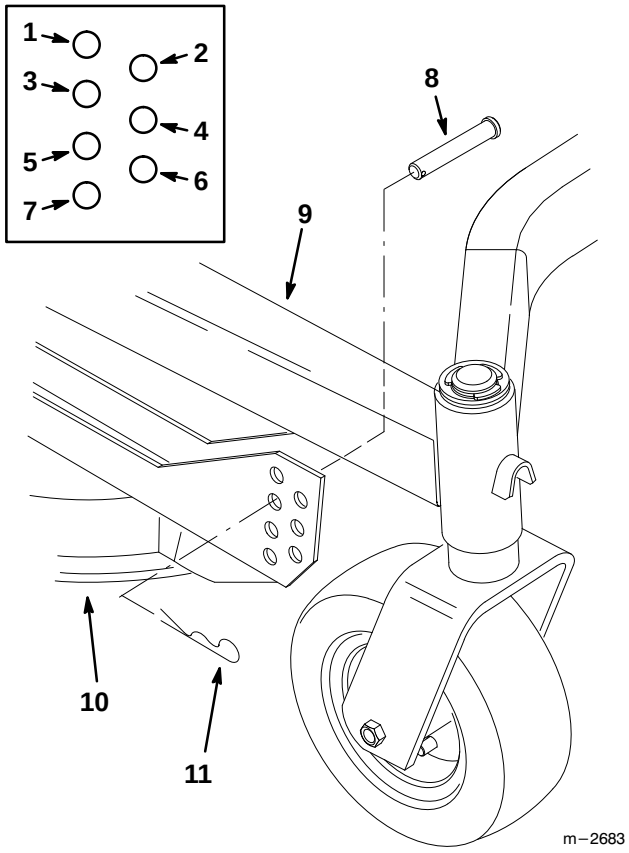

Figure 9

1. 2” (51 mm) Cut Height
2. 2-1/2” (64 mm) Cut Height
3. 3” (76 mm) Cut Height
4. 3-1/2” (89 mm) Cut Height
5. 4” (102 mm) Cut Height
6. 4-1/2” (114 mm) Cut Height
7. 5” (127 mm) Cut Height
8. Clevis Pin
9. Carrier Frame
10. Cutting Deck
11. Hairpin Cotter

Note: If you set the cutting unit to the 1” (26 mm) or 1-1/2” (38 mm) height-of-cut, relocate the front rollers to the top bracket holes as follows:

1. Remove the cotter pin from the roller shaft (Fig. 10).
2. Slide the roller shaft out of the bracket holes (Fig. 10).
3. Align the two front rollers with the top holes in the brackets, then reinstall the roller shaft (Fig. 10).
4. Reinstall the cotter pin into the roller shaft. Make sure the special L–shaped pin is installed through the roller shaft, and into the hole in the bracket (Fig. 10).

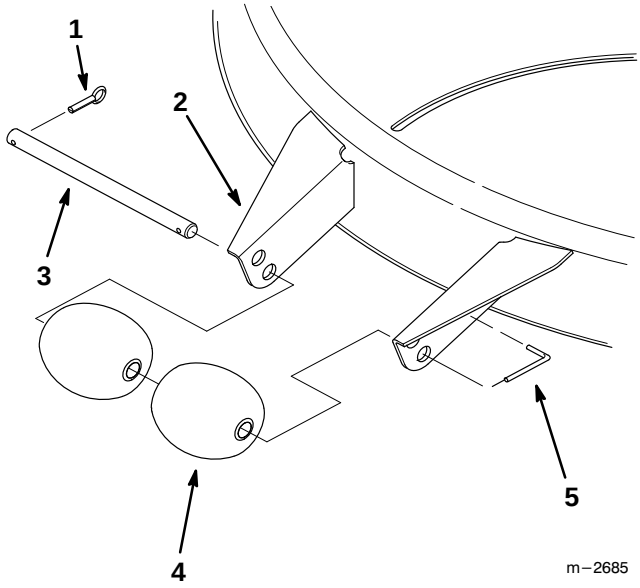

Figure 10

1. Cotter Pin
2. Bracket (2)
3. Roller Shaft
4. Front Roller (2)
5. L–shaped Pin

Tips for Mowing Grass

Fast Throttle Setting

For best mowing and maximum air circulation, operate the engine at “FAST.” Air is required to thoroughly cut grass clippings, so do not set the height-of-cut so low as to totally surround the mower by uncut grass. Always try to have one side of the mower free from uncut grass, which allows air to be drawn into the mower.

Cutting a Lawn for the First Time

Cut grass slightly longer than normal to ensure the cutting height of the mower does not scalp any uneven ground. However, the cutting height used in the past is generally the best one to use. When cutting grass longer than six inches tall, you may want to cut the lawn twice to ensure an acceptable quality of cut.

Cut 1/3 of the Grass Blade

It is best to cut only about 1/3 of the grass blade. Cutting more than that is not recommended unless grass is sparse, or it is late fall when grass grows more slowly.

Mowing Direction

Alternate mowing direction to keep the grass standing straight. This also helps disperse clippings which enhances decomposition and fertilization.

Mow at Correct Intervals

Normally, mow every four days. But remember, grass grows at different rates at different times. So to maintain the same cutting height, which is a good practice, mow more often in early spring. As the grass growth rate slows in mid summer, mow less frequently. If you cannot mow for an extended period, first mow at a high cutting height; then mow again two days later at a lower height setting.

Cutting Speed

To improve cut quality, use a slower ground speed.

Avoid Cutting Too Low

If the cutting width of the mower is wider than the mower you previously used, raise the cutting height to ensure that uneven turf is not cut too short.

Long Grass

If the grass is ever allowed to grow slightly longer than normal, or if it contains a high degree of moisture, raise the cutting height higher than usual and cut the grass at this setting. Then cut the grass again using the lower, normal setting.

When Stopping

If the machine’s forward motion must be stopped while mowing, a clump of grass clippings may drop onto your lawn. To avoid this, move onto a previously cut area with the blades “ENGAGED”.

Keep the Underside of the Mower Clean

Clean clippings and dirt from the underside of the mower after each use. If grass and dirt build up inside the mower, cutting quality will eventually become unsatisfactory.

Blade Maintenance

Maintain a sharp blade throughout the cutting season because a sharp blade cuts cleanly without tearing or shredding the grass blades. Tearing and shredding turns grass brown at the edges, which slows growth and increases the chance of disease. Check the cutter blades daily for sharpness, and for any wear or damage. File down any nicks and sharpen the blades as necessary. If a blade is damaged or worn, replace it immediately with a genuine TORO replacement blade.

Maintenance

Service Interval Chart

Service Operation	Each Use	8 Hours	25 Hours	Storage Service	Notes
Cutting Blades – check		X		X	
Belts – check for wear/cracks				X	
Blade Spindle Bearings – grease		X			
Castor Wheels – grease			X		
Mower Housing – clean	X	X		X	
Chipped Surfaces – paint				X	

Cutting Blades

To ensure a superior quality of cut, keep the blades sharp. For convenient sharpening and replacement, you may want to keep extra blades on hand.

⚠ WARNING

POTENTIAL HAZARD

- **A blade that is worn or damaged could break apart and pieces could be thrown at bystanders or at you as you use the mower.**

WHAT CAN HAPPEN

- **Pieces of blade that may be thrown could seriously injure or kill you or bystanders.**

HOW TO AVOID THE HAZARD

- **Periodically inspect the blade for wear and damage. Immediately install a new blade if it is worn or damaged.**

Before Inspecting or Servicing the Blades

Park the machine on a level surface, disengage the blade control (PTO) and set the parking brake. Turn the ignition key to “OFF” to stop the engine. Remove the key and disconnect the spark plug wire(s) from the spark plug(s).

Inspecting the Blades

1. Inspect the cutting edges (Fig 11). If the edges are not sharp or have nicks, remove and sharpen the blades. Refer to Sharpening the Blades on page 13.

2. Inspect the blades, especially the curved area (Fig. 11). If you notice any damage, wear, or a slot forming in this area (item 3 in Fig. 11), immediately install a new blade.

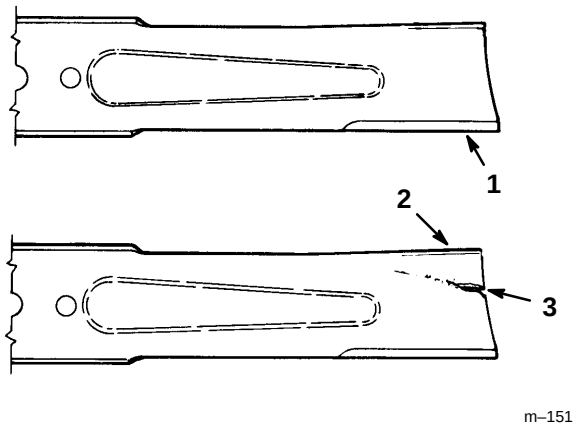

Figure 11

1. Cutting Edge
2. Curved Area
3. Wear/slot Forming

Checking for Bent Blades

1. Rotate the blades until the ends face forward and backward (Fig. 12). Measure at the “C” locations from a level surface to the cutting edge of the blades (Fig. 13). Note this dimension.

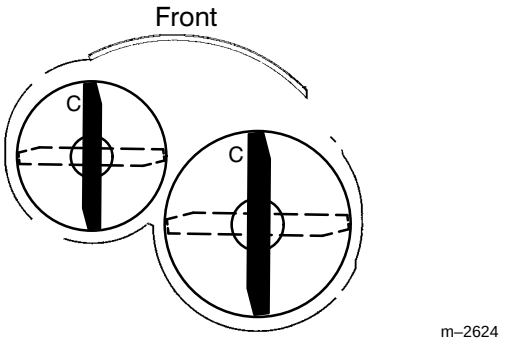

Figure 12

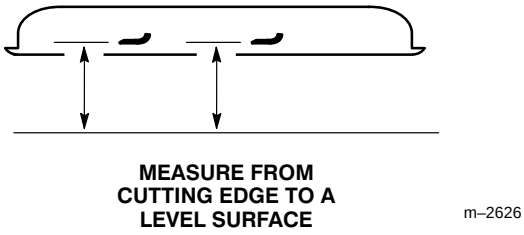

Figure 13

2. Rotate the opposite ends of the blades forward. Measure from a level surface to the cutting edge of the blades at the same position as in step 1 above. The difference between the dimensions obtained in steps 1 and 2 must not exceed 1/8” (3 mm). If this dimension exceeds 1/8” (3 mm), the blade is bent and must be replaced. Refer to Removing the Blades, and Installing the Blades on page 13.

⚠ WARNING

POTENTIAL HAZARD

- **A blade that is bent or damaged could break apart and pieces could be thrown at bystanders or at you as you use the mower.**

WHAT CAN HAPPEN

- **Pieces of blade that may be thrown could seriously injure or kill you or bystanders.**

HOW TO AVOID THE HAZARD

- **Always replace bent or damaged blade with a new blade.**
- **Never file or create sharp notches in the edges or surfaces of blade.**

Removing the Blades

Blades must be replaced if a solid object is hit, if the blade is out of balance or is bent. To ensure optimum performance and continued safety conformance of the machine, use genuine TORO replacement blades. Replacement blades made by other manufacturers may result in non-conformance with safety standards.

Hold the blade end using a rag or thickly-padded glove. Remove the blade bolt, lock washer and blade from the spindle shaft (Fig. 14).

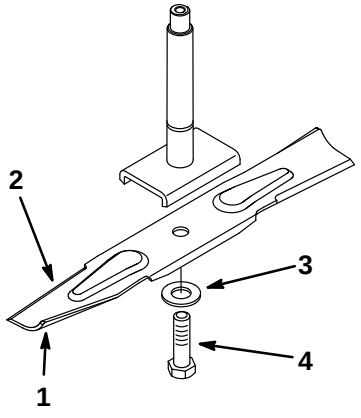

m–2632

Figure 14

1. Sail Area of Blade
2. Blade
3. Lock Washer
4. Blade Bolt

Sharpening the Blades

1. Use a file to sharpen the cutting edge at both ends of the blade (Fig. 15). Maintain the original angle. The blade retains its balance if the same amount of material is removed from both cutting edges.

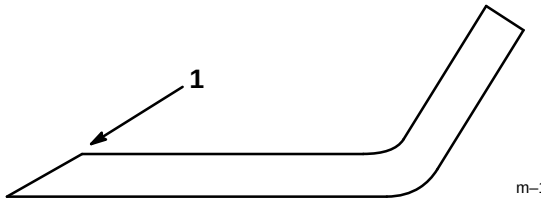

m–1854

Figure 15

1. Sharpen at original angle

2. Check the balance of the blade by putting it on a blade balancer (Fig. 16). If the blade stays in a horizontal position, the blade is balanced and can be used. If the blade is not balanced, file some metal off the end of the sail area only (Fig. 14). Repeat this procedure until the blade is balanced.

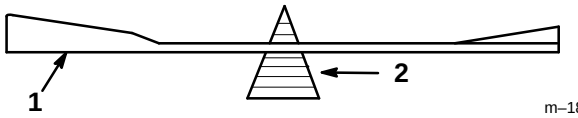

m–1855

Figure 16

1. Blade
2. Balancer

Installing the Blades

1. Install the blade onto the spindle shaft (Fig. 14).

IMPORTANT: The curved part of the blade must be pointing upward toward the inside of the mower to ensure proper cutting.

2. Install the lock washer and blade bolt (Fig. 14). Torque the blade bolt to 85–110 ft-lb (115–140 N•m).

Correcting Cutting Unit Mismatch

If one cutter blade cuts lower than the other, correct as follows:

1. Stop the engine, remove the key and disconnect the spark plug wire(s) from the spark plug(s).
2. Set the castor wheel tire pressure to 12–15 psi (83–103 kPa). Set the pressure in the traction unit tires to specifications and check that the blades are not bent. Refer to Checking for Bent Blades on page 12.
3. Set the height-of-cut to the 2-1/2” position. Refer to Adjusting the Height-Of-Cut in the Operation section. Make sure the clevis pins are resting on the frame cushions.
4. Rotate the blades so the tips line up with one another. The blade tips must be within 1/8” (3 mm) of each other. If the blade tips are not within 1/8” (3 mm) of each other, add shims (Part No. 3256-24) between the appropriate spindle housing and the bottom of the cutting unit to align the blades.

Setting the Front-to-Rear Pitch

1. Check the tire pressure.
2. Position the blades front-to-rear (Fig. 17). Measure at “C” and “D” locations (Fig. 17) from a level surface to the cutting edge of the blades (Fig. 18).
3. The mower should be 1/8”–5/8” (3–16 mm) lower in front “C” than in the rear “D”.

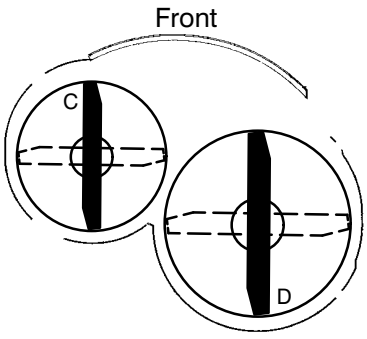

m–2624

Figure 17

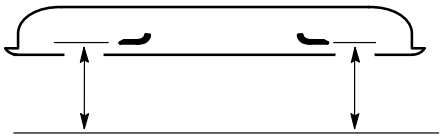

MEASURE FROM CUTTING EDGE TO A LEVEL SURFACE

m–2627

Figure 18

4. To change the front-to-rear pitch, move an equal number of thrust washers on both castor wheel forks. Move the thrust washer(s) from the top of the carrier frame mounting tube to the bottom to raise the front of the mower. Move the thrust washer(s) from the bottom of the mounting tube to the top to lower the front of the mower. (Fig. 19).

5. Check the side-to-side leveling of the cutting unit.

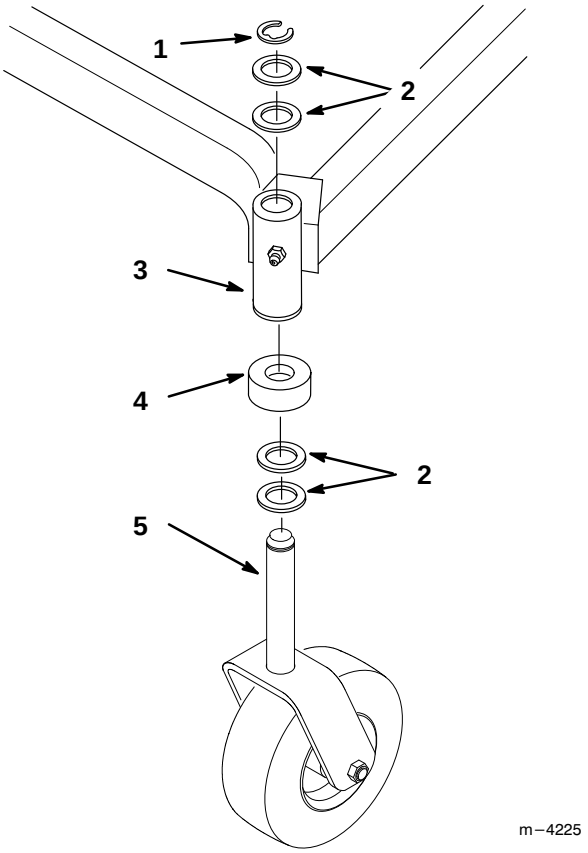

Figure 19

1. Retaining Ring
2. Thrust Washer
3. Carrier Frame Mounting Tube
4. Spacer
5. Castor Wheel Fork

Setting the Side-to-Side Leveling

1. Check the tire pressure.

2. Position the blades side-to-side (Fig. 20). Measure at “A” and “B” locations (Fig. 20) from a level surface to the cutting edge of blades (Fig. 21).

3. The difference between measurements “A” and “B” should be no more than 1/4” (6 mm).

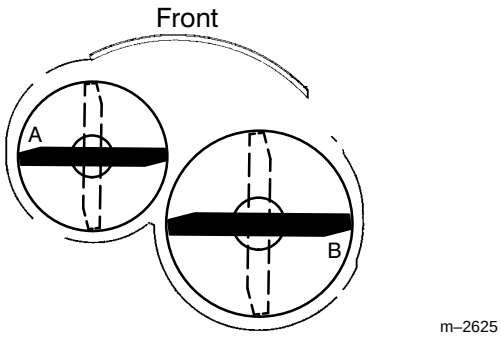

Figure 20

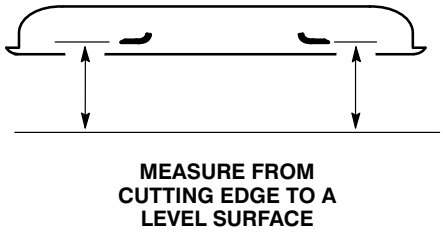

Figure 21

4. To change the side-to-side leveling, move the thrust washers on one castor wheel fork only. Move the thrust washers from the top of the carrier frame mounting tube to the bottom to raise the corresponding side of the mower. Move the thrust washers from the bottom of the mounting tube to the top to lower the corresponding side of the mower. (Fig. 19).

5. Recheck the front-to-rear pitch of the cutting unit.

Greasing the Bearings and Bushings

The cutting unit must be lubricated regularly. Refer to the Service Interval Chart on page 11. Grease with No. 2 general purpose lithium base or molybdenum base grease.

1. Stop the engine, remove the key and disconnect the spark plug wire(s) from the spark plug(s).
2. Grease the fittings on both spindle bearings (Fig. 23).

   Note: You can access the spindle grease fittings through the holes in the deck cover.

3. Grease the fittings on the carrier frame mounting tubes and castor wheels (Fig. 22).

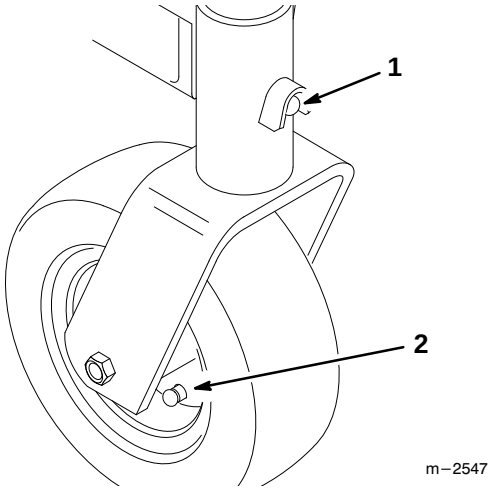

Figure 22

1. Carrier Frame Mounting Tube Grease Fitting
2. Castor Wheel Grease Fitting

Replacing the Deck Belt

Squealing when the belt is rotating, blades slipping when cutting grass, frayed belt edges, burn marks and cracks are signs of a worn deck belt. Replace the deck belt if any of these conditions are evident.

1. Stop the engine, remove the key and disconnect the spark plug wire(s) from the spark plug(s).
2. Remove the deck cover from the top of the cutting unit.
3. Remove the drive belt. Refer to Replacing the Drive Belt, steps 3 and 4 on page 17.
4. Disconnect the idler arm spring to relieve tension on the idler pulley, then remove the worn deck belt (Fig. 23).
5. Install the new deck belt around the right spindle pulley, around the inside of the idler pulley, then around the lower pulley on the left spindle (Fig. 23).
6. Reconnect the idler arm spring (Fig. 23).

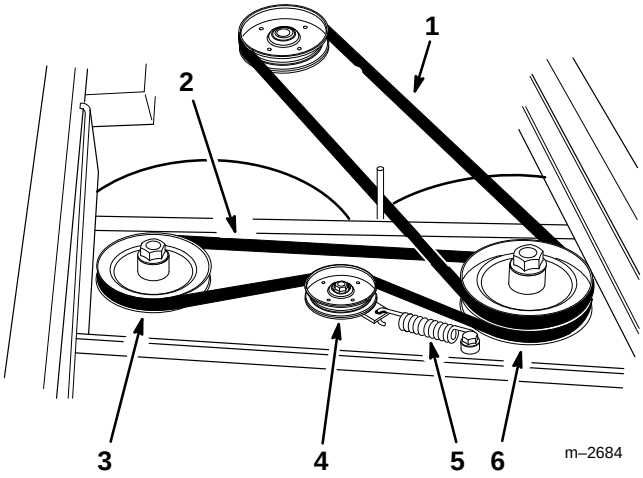

Figure 23

Top View

1. Drive Belt
2. Deck Belt
3. Right Spindle Pulley
4. Idler Pulley
5. Idler Arm Spring
6. Lower Left Spindle Pulley

7. Reinstall the drive belt. Refer to Replacing the Drive Belt, steps 5–7 on page 17.
8. Reinstall the deck cover onto the cutting unit.

Replacing the Drive Belt

Squealing when the belt is rotating, blades slipping when cutting grass, frayed belt edges, burn marks and cracks are signs of a worn drive belt. Replace the drive belt if any of these conditions are evident.

1. Stop the engine, remove the key and disconnect the spark plug wire(s) from the spark plug(s).

2. Remove the deck cover from the cutting unit.

3. Loosen the jam nuts on each adjusting shaft to loosen the tension on the drive belt (Fig 24).

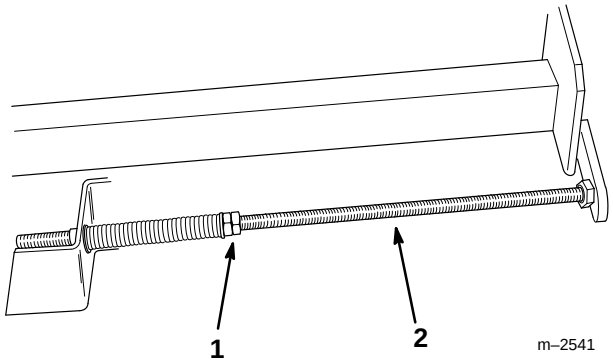

Figure 24

1. Jam Nuts
2. Adjusting Shaft

4. Remove the worn drive belt (Fig. 25).

5. Install the new drive belt onto the traction unit drive pulley and the top pulley on the left spindle (Fig. 25).

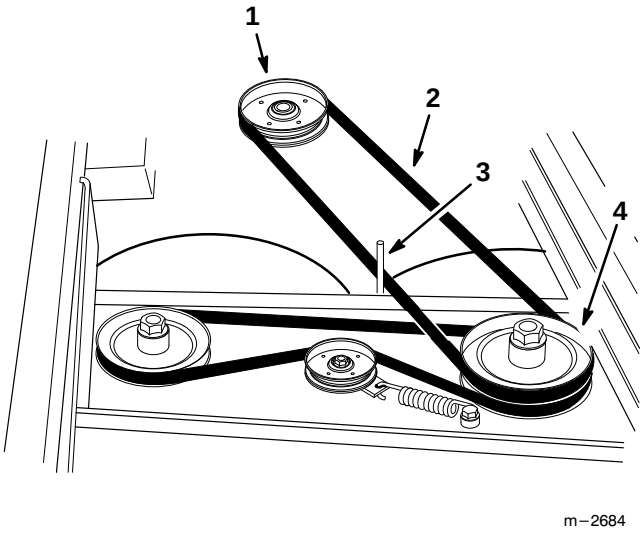

Figure 25

1. Traction Unit Drive Pulley
2. Drive Belt
3. Belt Guide
4. Top Left Spindle Pulley

6. Tighten the jam nuts on the adjusting shafts until the springs are compressed to a length of 5” (12.7 cm) (Fig 26).

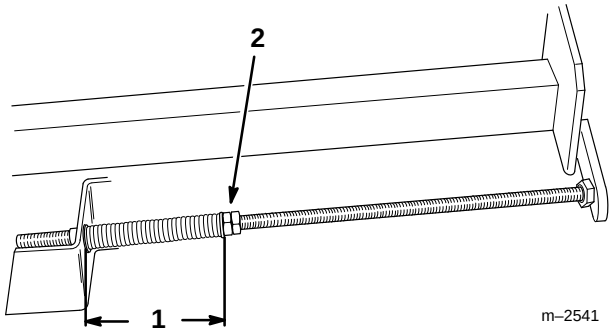

Figure 26

1. 5” between the Spacer and Bushing
2. Jam Nuts

7. Check the position of the belt guide. The guide should be positioned about 1/8” (3 mm) away from the belt. Adjust the belt guide as necessary (Fig. 25).

8. Reinstall the deck cover onto the cutting unit.

Converting the Mower to Side Discharge Mowing

⚠ DANGER

POTENTIAL HAZARD

- **Without the discharge chute cover, discharge deflector or complete grass catcher assembly mounted in place, you and others are exposed to blade contact and thrown debris.**

WHAT CAN HAPPEN

- **Contact with rotating mower blade(s) and thrown debris will cause injury or death.**

HOW TO AVOID THE HAZARD

- **NEVER operate the mower without the discharge chute cover, discharge deflector or complete grass catcher assembly mounted in place. The discharge chute cover and grass deflector route material down toward the turf. If the discharge chute cover or discharge deflector are ever damaged, replace them immediately.**
- **Never put your hands or feet under the mower.**
- **Never try to clear discharge area or mower blades unless you move the power take-off (PTO) to "OFF" and rotate the ignition key to "OFF." Also remove the key and pull the wire(s) off the spark plug(s).**

1. Stop the engine, remove the key and disconnect the spark plug wire(s) from the spark plug(s).
2. Thoroughly clean the mower.
3. Remove the two locknuts, flat washers and hex head bolts holding the discharge chute cover to the deck and remove the cover from the deck (Fig. 27).

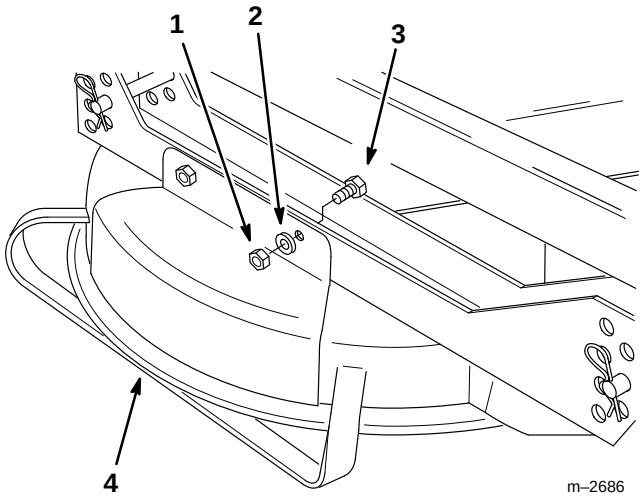

Figure 27

1. Locknut (2)
2. Flat Washer (2)
3. Hex Head Bolt (2)
4. Discharge Chute Cover

4. Install the discharge deflector onto the right side of the deck using the hex head bolts, flat washers and locknuts and removed in step 3 above (Fig. 28).

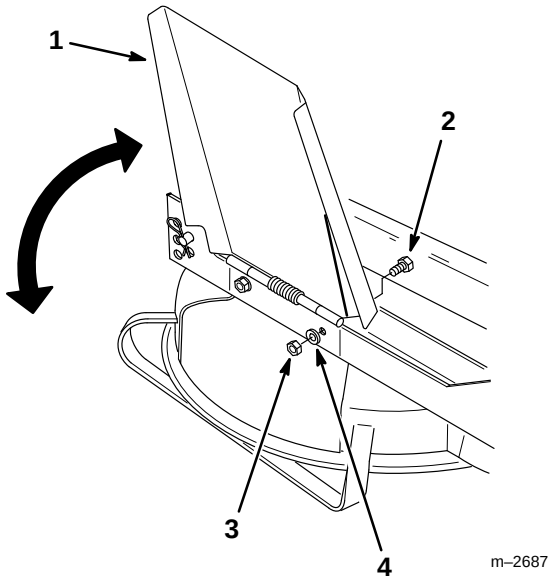

Figure 28

1. Discharge Deflector
2. Hex Head Bolt (2)
3. Locknut (2)
4. Flat Washer (2)

5. Loosen the wing nut on the front cover shaft (Fig. 29).

6. Lift the tab on the end of the slot cover up and out of the slot in the deck, then rotate the slot cover 180 degrees (Fig. 29).

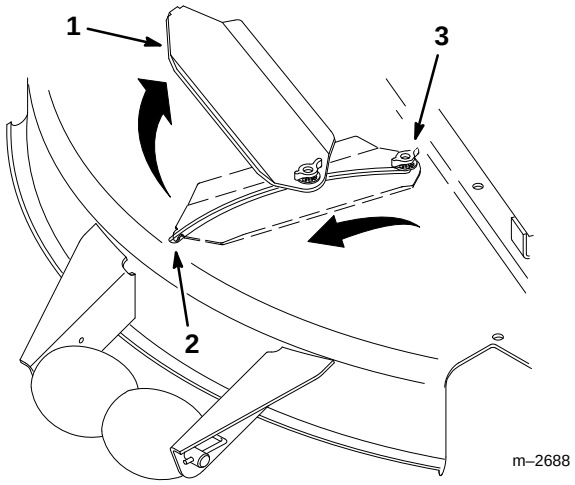

Figure 29

1. Slot Cover
2. Tab
3. Wing Nut on Front Cover Shaft (in “CLOSED” position)

7. Slide the wing nut and front cover shaft to the “OPEN” position on the deck to swing the front cover to the side discharge position (Fig. 30).

8. Insert the tab on the end of the slot cover back into the slot in the deck (180 degrees from its original position), then tighten the wing nut on the front cover shaft (Fig. 30).

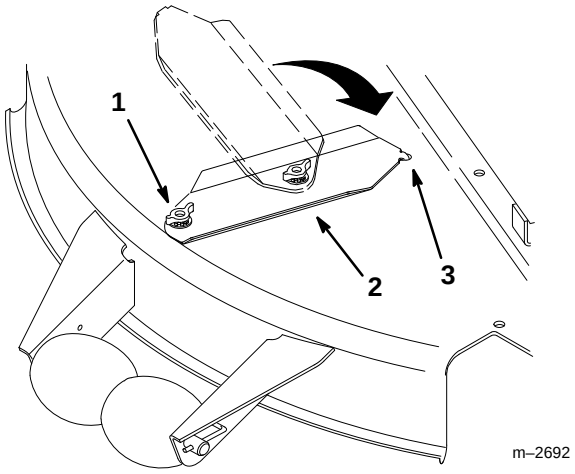

Figure 30

1. Wing Nut and Front Cover Shaft (in “OPEN” position)
2. Slot Cover
3. Tab

Replacing the Castor Wheel Fork Bushings

The castor wheel forks are mounted in bushings pressed into the top and bottom of the carrier frame mounting tubes. To check the bushings, move the castor forks back and forth and side-to-side. If a castor fork is loose, the bushings are worn and must be replaced.

1. Raise the cutting unit so the castor wheels are off the floor, then block up the front of the mower with jack stands.
2. Remove the retaining ring and thrust washer(s) from the top of the castor wheel fork (Fig. 1).
3. Pull the castor wheel fork out of the mounting tube, leaving the thrust washer(s) and spacer on the bottom of the fork. Remember the location of the thrust washers and spacer on each fork to ensure correct installation, and to maintain a level deck (Fig. 1).

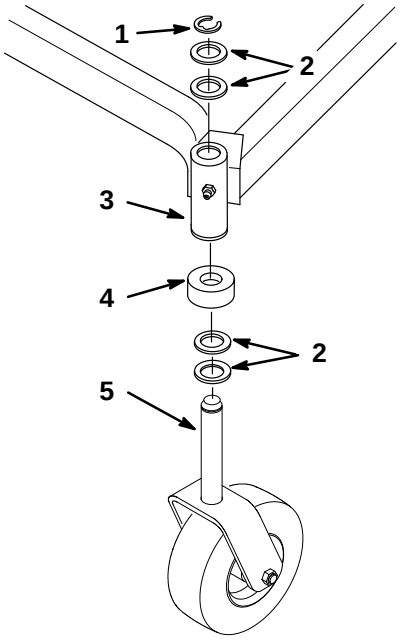

Figure 31

1. Retaining Ring
2. Thrust Washers
3. Carrier Frame Mounting Tube
4. Spacer
5. Castor Wheel Fork

4. Insert a pin punch into the mounting tube and carefully drive out the bushings (Fig. 32). Clean the inside of the mounting tube.
5. Grease the inside and outside of the new bushings. Use a hammer and flat plate to carefully drive the bushings into the mounting tube.
6. Inspect the castor wheel fork for wear and replace if necessary (Fig. 1).
7. Slide the castor wheel fork through the bushings in the mounting tube. Replace the thrust washer(s) onto the fork and secure with the retaining ring (Fig 1).

   IMPORTANT: The inside diameter of the bushings may collapse slightly when installed. If the castor wheel fork does not slide into the new bushings, ream both bushings to an inside diameter of 1.126 in. (28.6mm).
8. Grease the fitting on the carrier frame mounting tube using No. 2 general purpose lithium base or molybdenum base grease.

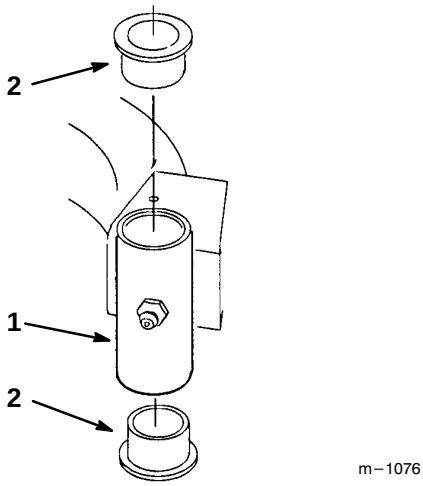

Figure 32

1. Carrier Frame Mounting Tube
2. Bushing

Servicing the Castor Wheels and Bearings

The castor wheels rotate on a roller bearing supported by a spanner bushing. If the bearing is kept well lubricated, wear will be minimal. Failure to keep the bearing well lubricated will cause rapid wear. A wobbly castor wheel usually indicates a worn bearing.

1. Remove the locknut and wheel bolt holding the castor wheel to the castor fork (Fig. 33).
2. Remove one washer and bushing, then pull the spanner bushing and roller bearing out of the wheel hub (Fig. 33).
3. Remove the other washer and bushing from the wheel hub and clean any grease and dirt from the wheel hub (Fig. 33).
4. Inspect the roller bearing, bushings, spanner bushing and inside of the wheel hub for wear. Replace any defective or worn parts (Fig. 33).

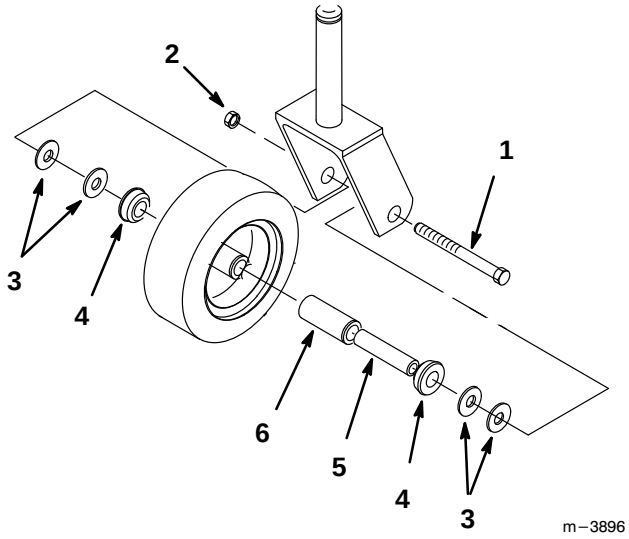

Figure 33

1. Locknut
2. Wheel Bolt
3. Washer
4. Bushing
5. Spanner Bushing
6. Roller Bearing

5. To assemble, place one (1) bushing into the wheel hub. Grease the roller bearing and spanner bushing and slide them into the wheel hub. Place the second bushing into the wheel hub (Fig. 33).
6. Install the washers on the outsides of the bushings, then install the castor wheel into the castor fork and secure with the wheel bolt and locknut. Tighten the locknut until the spanner bushing bottoms against the inside of the castor forks (Fig. 33).
7. Grease the fitting on the castor wheel.

Storage

1. Clean any dirt and chaff from the top of the mower.
2. Scrape any heavy buildup of grass and dirt from the underside of the mower, then wash the mower with a garden hose.
3. Check the condition of the blades. Refer to Cutting Blades on page 11.
4. Check the condition of the drive and deck belts.
5. Check and tighten all bolts, nuts and screws. Repair or replace any part that is damaged or defective.
6. Paint all scratched or bare metal surfaces. Paint is available from your Authorized Service Dealer.
7. Store the machine in a clean, dry garage or storage area. Cover the machine to protect it and keep it clean.

Troubleshooting

PROBLEM	POSSIBLE CAUSES	CORRECTIVE ACTION
Abnormal vibration.	1. Cutting blade(s) is/are bent or unbalanced.	1. Install new cutting blade(s).
	2. Blade mounting bolt is loose.	2. Tighten blade mounting bolt.
	3. Engine mounting bolts are loose.	3. Tighten engine mounting bolts.
	4. Loose engine pulley, idler pulley, or blade pulley.	4. Tighten the appropriate pulley.
	5. Engine pulley is damaged.	5. Contact Authorized Service Dealer.
	6. Blade spindle bent.	6. Contact Authorized Service Dealer.
Uneven cutting height.	1. Blade(s) not sharp.	1. Sharpen blade(s).
	2. Cutting blade(s) is/are bent.	2. Install new cutting blade(s).
	3. Mower is not level.	3. Level mower from side-to-side and front-to-rear.
	4. Underside of mower is dirty.	4. Clean the underside of the mower.
	5. Tire pressure is incorrect.	5. Adjust tire pressure.
	6. Blade spindle bent.	6. Contact Authorized Service Dealer.
Blades do not rotate.	1. Drive belt is worn, loose or broken.	1. Install new drive belt.
	2. Drive belt is off pulley.	2. Install drive belt and check adjusting shafts and belt guide for correct position.
	3. Deck belt is worn, loose or broken.	3. Install new deck belt.
	4. Deck belt is off pulley.	4. Install deck pulley and check the idler pulley, idler arm and spring for correct position and function.