Form No. 3424-655 Rev A

TORO®

Count on it.

Parts Catalog

# Z Master® Professional 5000 Series Riding Mower

## with 60in TURBO FORCE® Side Discharge Mower

**Model No. 74930—Serial No. 403319739 and Up**

Register at www.Toro.com.
Original Instructions (EN)

*3424-655* A

# Ordering Replacement Parts

To order replacement parts, please supply the part number, the quantity, and the description of each part desired.

### Understanding Reference Numbers

Each identified part in an illustration has a reference number. The reference number for a part also appears in the parts list, along with other information about the part.

This catalog uses two special reference number formats, one to indicate parts in a service assembly and another to indicate the quantity of a given part in an illustration.

### Service Assembly Reference Numbers

Parts in service assemblies have reference numbers in the form a:b. The a represents the reference number of the entire service assembly and the b represents a sequential number unique to each part within the service assembly.

For example, a wheel assembly might be identified by reference number 6, the tire by 6:1, the valve by 6:2, and the wheel by 6:3. When you order the assembly identified by reference number 6, you receive all parts identified by reference numbers 6:1,6:2, and 6:3. However, you may also order any part individually. Reference numbers of this type appear in illustration and in parts lists.

### Reference Numbers Indicating Quantity

In an illustration, if a reference number indicates more than one part, the reference number has the form nX y. The n represents the quantity of the part, the X is the multiplication symbol, and the y represents the reference number.

For example, in an illustration, the reference number 2X 37 means that two of the parts identified by reference number 37 are indicated.

# Contents

Frame Assembly . . . . . 4
Roll-Over Protection System Assembly No. 116-0231 . . . . . 6
Caster Fork and Wheel Assembly . . . . . 8
Hydraulic Drive Assembly . . . . . 10
Pump Idler Assembly No. 116-1255 . . . . . 12
LH Hydro Assembly No. 126-1323 . . . . . 14
RH Hydro Assembly No. 126-1324 . . . . . 16
Rear Wheel Assembly . . . . . 18
Park Brake Assembly . . . . . 20
Fuel System Assembly . . . . . 22
Fuel Tank Assembly No. 135-0643 . . . . . 24
Seat Mounting Assembly . . . . . 26
Seat Assembly No. 125-3107 . . . . . 28
Motion Control Assembly . . . . . 30
Control Console Assembly . . . . . 32
Electrical Assembly . . . . . 34
Wire Harness Assembly No. 135-5753 . . . . . 36
Deck Lift Assembly . . . . . 38
Height-of-Cut Assembly No. 109-7438 . . . . . 40
Engine, Clutch and Muffler Assembly . . . . . 42
Deck Assembly . . . . . 44
Deck Decal Assembly No. 136-8639 . . . . . 46
Idler Arm Assembly . . . . . 48
Spindle Assembly No. 127-0560 . . . . . 50
Rubber Deflector Assembly No. 108-2792 . . . . . 52
Frame Decal Assembly . . . . . 54
Attachments and Accessories . . . . . 56

**© 2018—The Toro® Company**
**8111 Lyndale Avenue South**
**Bloomington, MN 55420**



**Contact us at www.Toro.com.**
**Printed in the USA.**
**All Rights Reserved**

# Frame Assembly

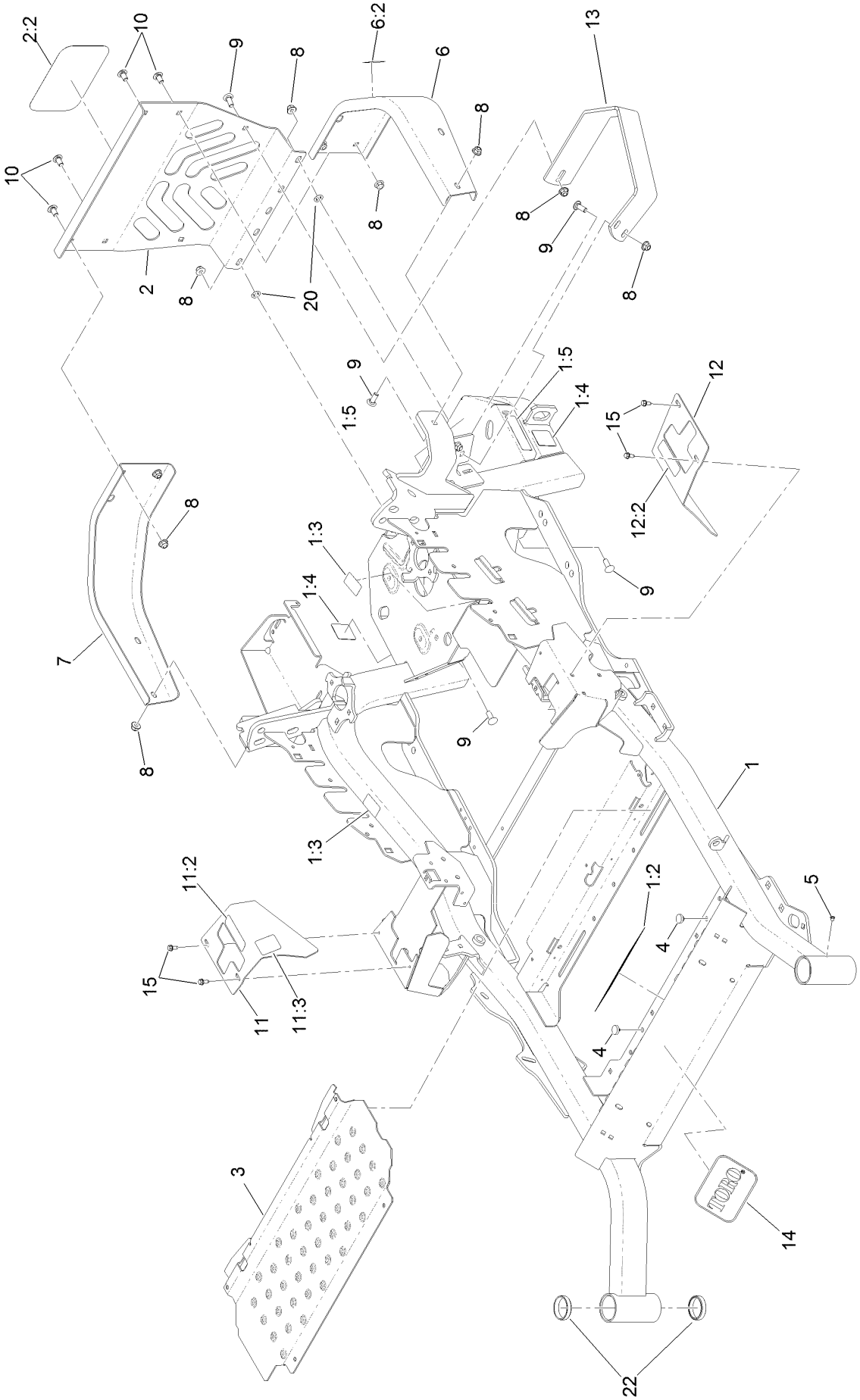

# Frame Assembly (continued)

| Ref. | Part Number | Qty. | Description |
|---|---|---|---|
| 1 | 116-5902 | 1 | Mainframe ASM |
| 1:2 | 132-0871 | 1 | Decal-Danger |
| 1:3 | 106-5517 | 2 | Decal-Warning |
| 1:4 | 106-2655 | 2 | Decal-Hazard, Pinched Finger |
| 1:5 | 133-8062 | 1 | Decal-Arrestor, Spark |
| 2 | 115-7410 | 1 | Rear Guard ASM |
| 2:2 | 67-7320 | 1 | Decal |
| 3 | 116-8898-01 | 1 | Floorpan |
| 4 | 1-513658 | 2 | Bumper |
| 5 | 1-811010 | 2 | Plug |
| 6 | 116-0180 | 1 | LH Bumper ASM |
| 6:2 | 106-5517 | 1 | Decal-Warning |
| 7 | 116-0057-03 | 1 | Bumper-RH |
| 8 | 104-8301 | 11 | Nut-HF, NI |
| 9 | 3231-22 | 7 | Screw-CARR |
| 10 | 3231-21 | 4 | Screw-CARR |
| 11 | 116-5899 | 1 | RH Motion Control Cover ASM |
| 11:2 | 99-8936 | 1 | Decal-Control, Motion |
| 11:3 | 116-5988 | 1 | Decal-Park Brake, CE |
| 12 | 116-0580 | 1 | LH Motion Control Cover ASM |
| 12:2 | 99-8936 | 1 | Decal-Control, Motion |
| 13 | 126-2067-03 | 1 | Guard-Muffler |
| 14 | 68-3640 | 1 | Decal |
| 15 | 32144-10 | 4 | Screw-HWH |
| 20 | 107-3154 | 2 | Nut-Push |
| 22 | 1-543508 | 4 | Cup-Bearing |

# Roll-Over Protection System Assembly No. 116-0231

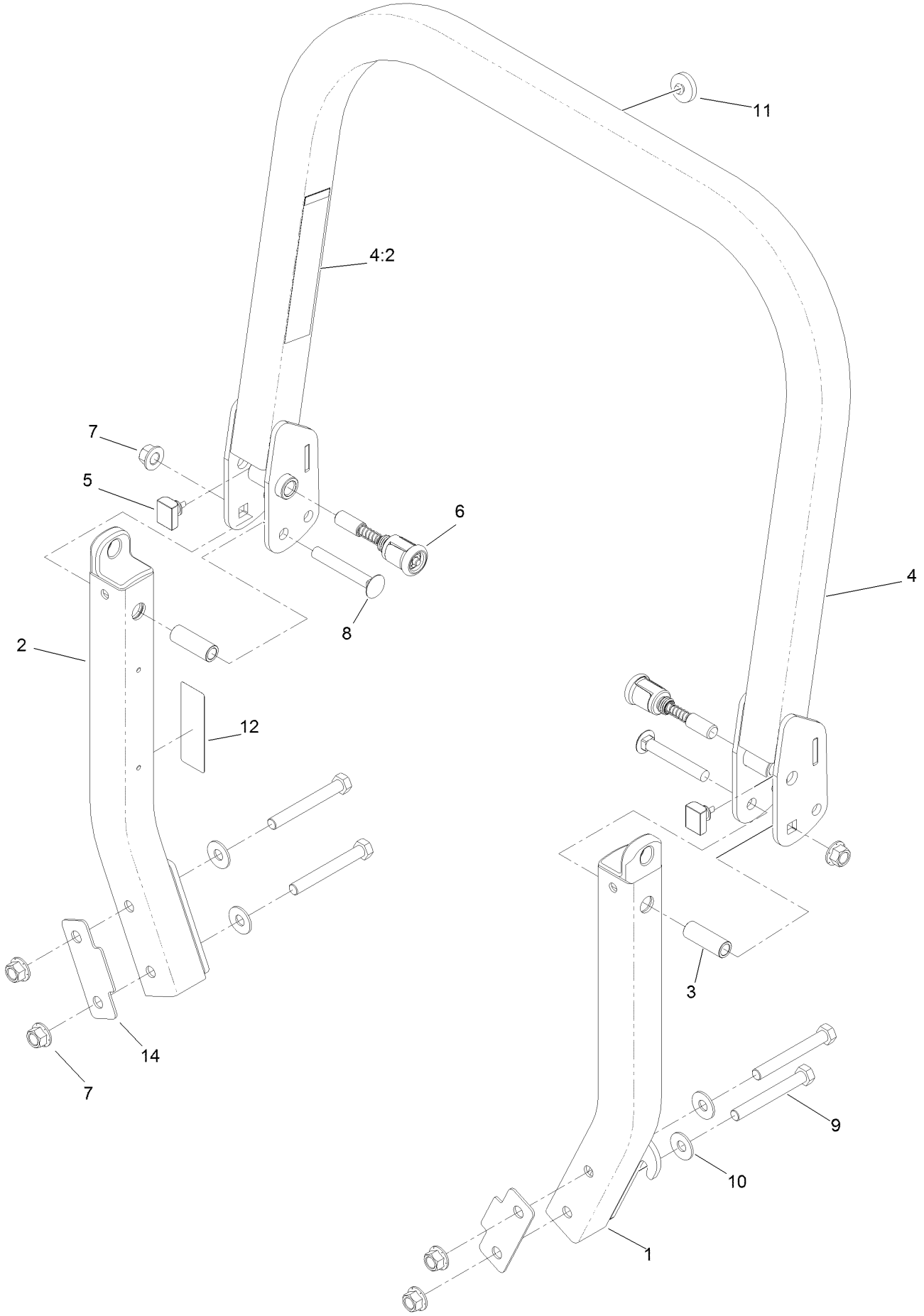

# Roll-Over Protection System Assembly No. 116-0231 (continued)

| Ref. | Part Number | Qty. | Description |
|---|---|---|---|
| 1 | | 1 | Leg-ROPS, LH ● |
| 2 | | 1 | Leg-ROPS, RH ● |
| 3 | 109-6653 | 2 | Spacer |
| 4 | | 1 | Upper ROPS ASM ● |
| 4:2 | 107-3069 | 1 | Decal-Warning |
| 5 | 109-5337 | 2 | Bumper-ROPS |
| 6 | 116-0104 | 2 | Pin-Spring |
| 7 | 99-5107 | 6 | Nut-Lock |
| 8 | 3233-10 | 2 | Screw-CARR |
| 9 | 325-35 | 4 | Screw-HH |
| 10 | 109-9505 | 4 | Washer-Spring |
| 11 | 109-9233 | 1 | Bumper-Push-In, Rubber |
| 12 | 117-0346 | 1 | Decal-Caution, Fuel Vent |
| 14 | 116-0960 | 2 | Spacer |

● Not serviced separately

# Caster Fork and Wheel Assembly

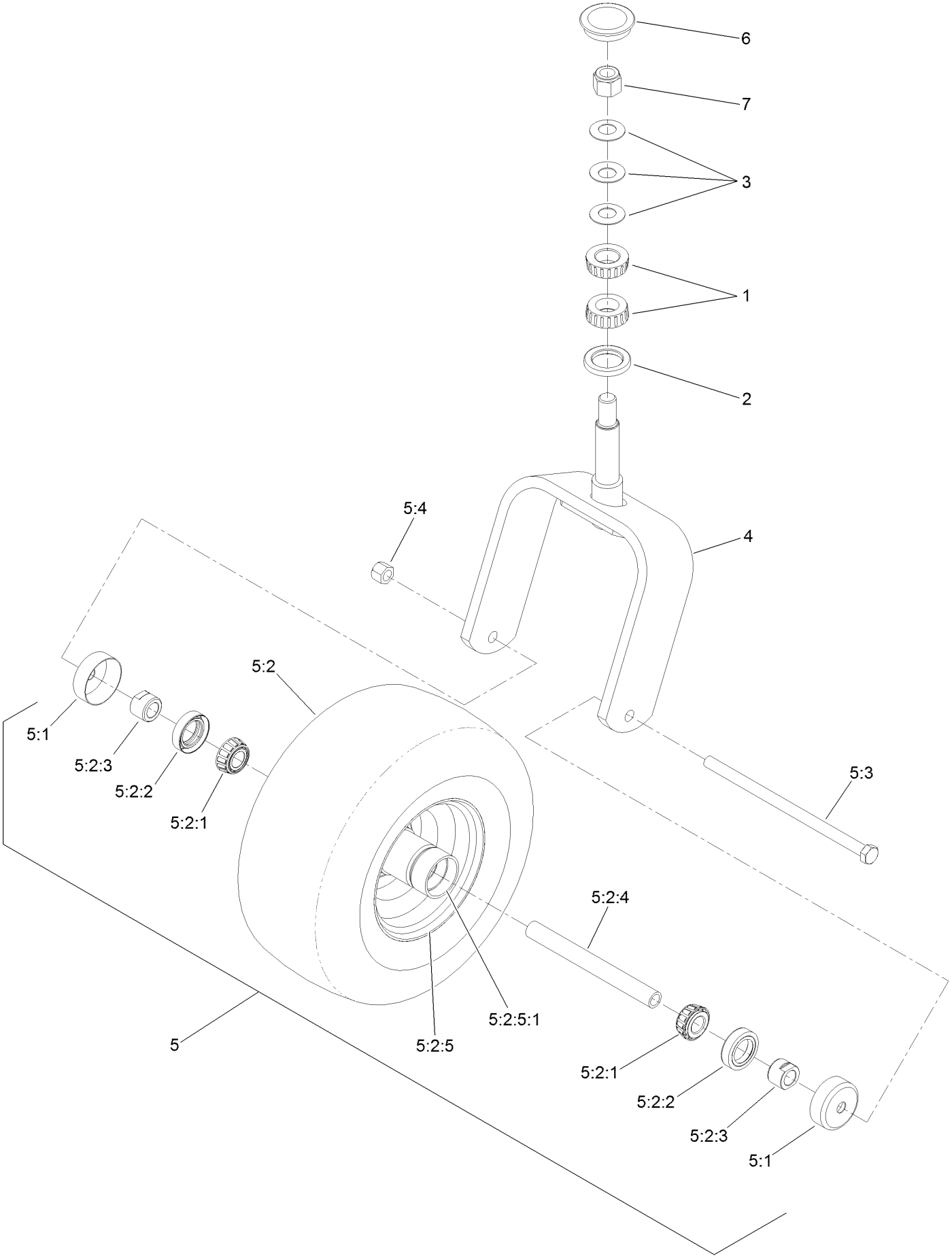

# Caster Fork and Wheel Assembly (continued)

| Ref. | Part Number | Qty. | Description |
|---|---|---|---|
| 1 | 1-543509 | 2 | Bearing-Roller, Tapered |
| 2 | 116-5647 | 1 | Seal-Grease |
| 3 | 1-633508 | 3 | Washer-Bellville |
| 4 | 116-6707-01 | 1 | Caster |
| 5 | 127-9528 | 1 | Wheel And Axle ASM |
| 5:1 | 103-2768 | 2 | Guard-Seal |
| 5:2 | | 1 | Wheel And Bearing ASM ● |
| 5:2:1 | 1-633585 | 2 | Bearing-Cone, Taper |
| 5:2:2 | 103-0063 | 2 | Seal-Caster |
| 5:2:3 | 103-3051 | 1 | Spacer-Nut ■ |
| 5:2:4 | 126-5361 | 1 | Axle Caster ASM |
| 5:2:5 | | 1 | Wheel And Tire ASM ● |
| 5:2:5:1 | 1-633584 | 2 | Bearing-Cup |
| 5:3 | 325-39 | 1 | Screw-HH |
| 5:4 | 3296-23 | 1 | Nut-Lock, NI |
| 6 | 103-4882 | 1 | Cap-Grease |
| 7 | 3296-51 | 1 | Nut-Lock, NI |

● Not serviced separately
■ Use Pro-Lock, Nut Type (P/N 1-840022, .5ml tube) on threads.

# Hydraulic Drive Assembly

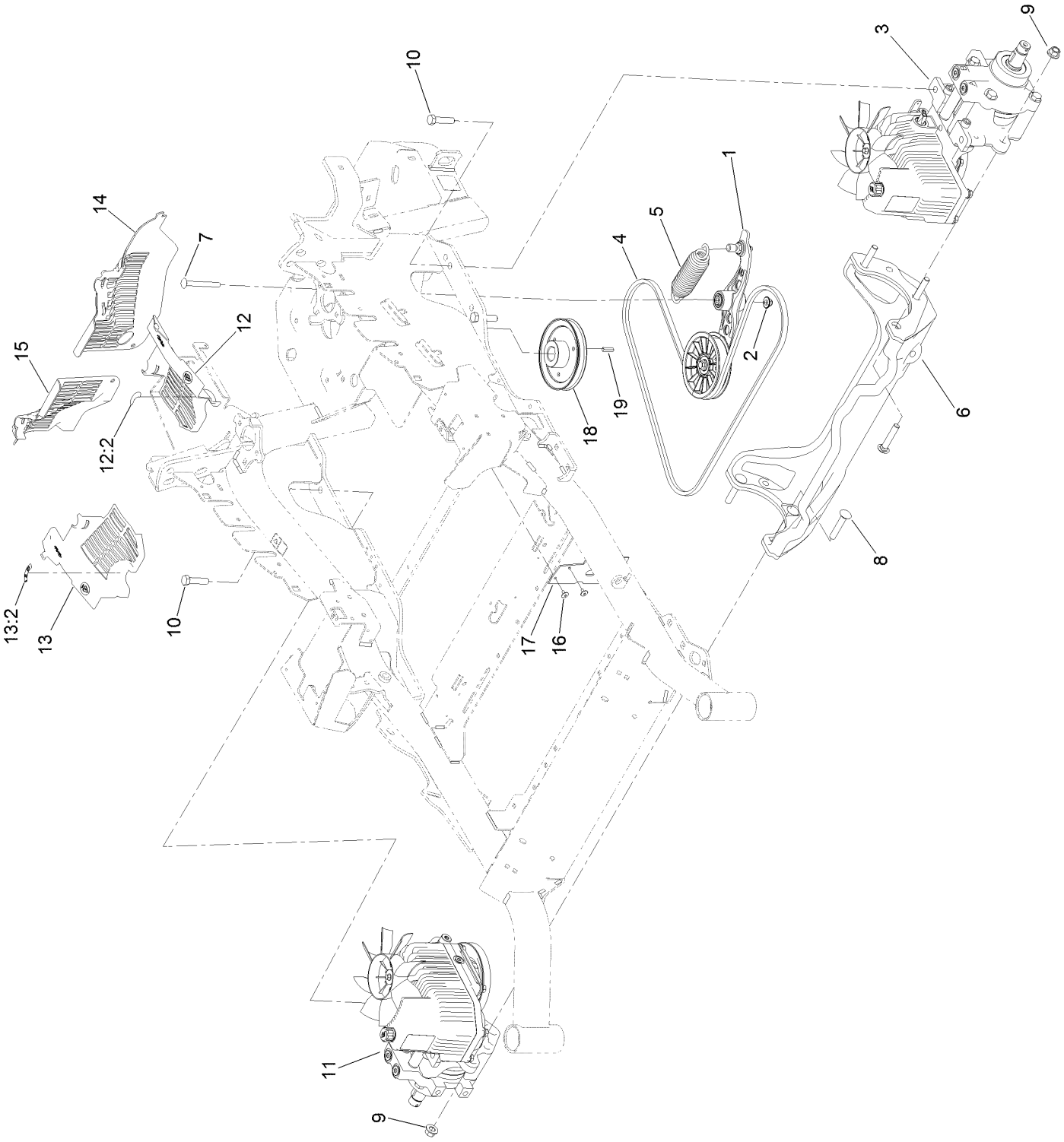

# Hydraulic Drive Assembly (continued)

| Ref. | Part Number | Qty. | Description |
|---|---|---|---|
| 1 | 116-1255 | 1 | Pump Idler ASM |
| 2 | 109-6658 | 1 | Nut-Flange, NI |
| 3 | 126-1323 | 1 | LH Hydro ASM (12Cc W/ Shock) |
| 4 | 109-3388 | 1 | Belt |
| 5 | 116-6317 | 1 | Spring-Extension |
| 6 | 116-7558 | 1 | Cradle-Hydro |
| 7 | 116-1502 | 1 | Bolt-Shoulder, Carriage |
| 8 | 126-0095 | 6 | Screw-CARR |
| 9 | 99-5107 | 6 | Nut-Lock |
| 10 | 325-8 | 4 | Screw-HH |
| 11 | 126-1324 | 1 | RH Hydro ASM (12Cc W/ Shock) |
| 12 | 116-0170 | 1 | LH Hydro Guard ASM |
| 12:2 | 116-8726 | 1 | Decal-Oil, Hydro |
| 13 | 116-0171 | 1 | RH Hydro Guard ASM |
| 13:2 | 116-8726 | 1 | Decal-Oil, Hydro |
| 14 | 109-9057 | 1 | Guard-Hydro, Rear (LH) |
| 15 | 109-9058 | 1 | Guard-Hydro, Rear (RH) |
| 16 | 1-803035 | 2 | Rivet-Pop |
| 17 | 116-2362 | 1 | Deflector-Air Flow |
| 18 | 109-9905 | 1 | Sheave |
| 19 | 1-807259 | 1 | Key |
| 99 | 114-4713 | 1 | Hypr-Oil 500 (Quart) ● |
| 99 | 114-4714 | 1 | Hypr-Oil 500 (Gallon) ● |
| 99 | 114-4715 | 1 | Hypr-Oil 500-5 (5 Gallon) ● |
| 99 | 117-0390 | 1 | Filter-Hydro ● |

● Not illustrated

# Pump Idler Assembly No. 116-1255

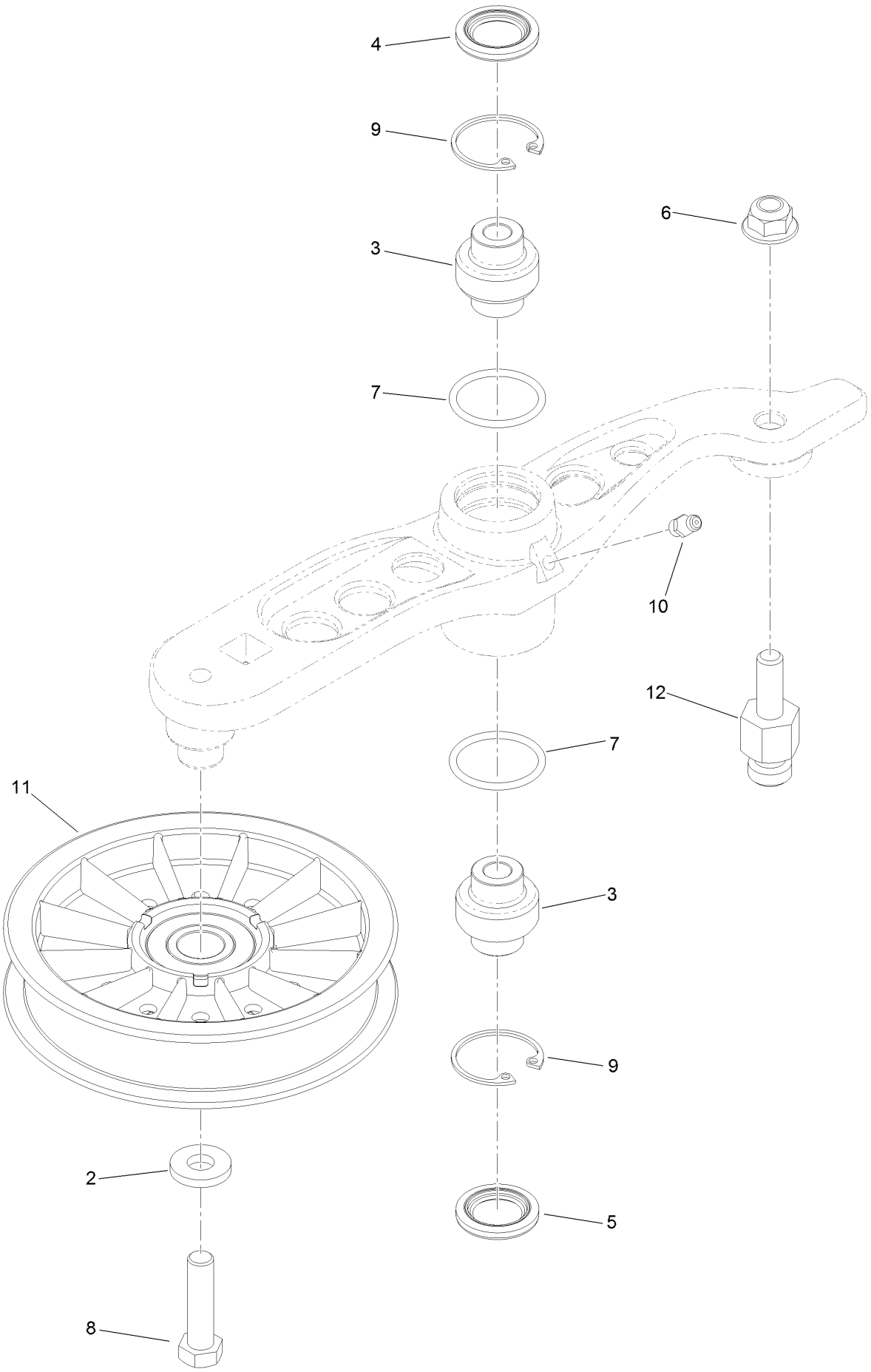

# Pump Idler Assembly No. 116-1255 (continued)

| Ref. | Part Number | Qty. | Description |
|---|---|---|---|
| 2 | 43-0940 | 1 | Spacer |
| 3 | 103-3504 | 2 | Bearing-Spherical |
| 4 | 103-3505 | 1 | Seal-Lip, Double |
| 5 | 103-3506 | 1 | Seal-Lip, Single |
| 6 | 109-6658 | 1 | Nut-Flange, NI |
| 7 | 106-7159 | 2 | O-Ring |
| 8 | 323-8 | 1 | Screw-HH |
| 9 | 32120-10 | 2 | Ring-Snap |
| 10 | 302-19 | 1 | Fitting-Grease |
| 11 | 109-8076 | 1 | Pulley-Idler |
| 12 | 132-4724 | 1 | Pin-Anchor, Spring |

# LH Hydro Assembly No. 126-1323

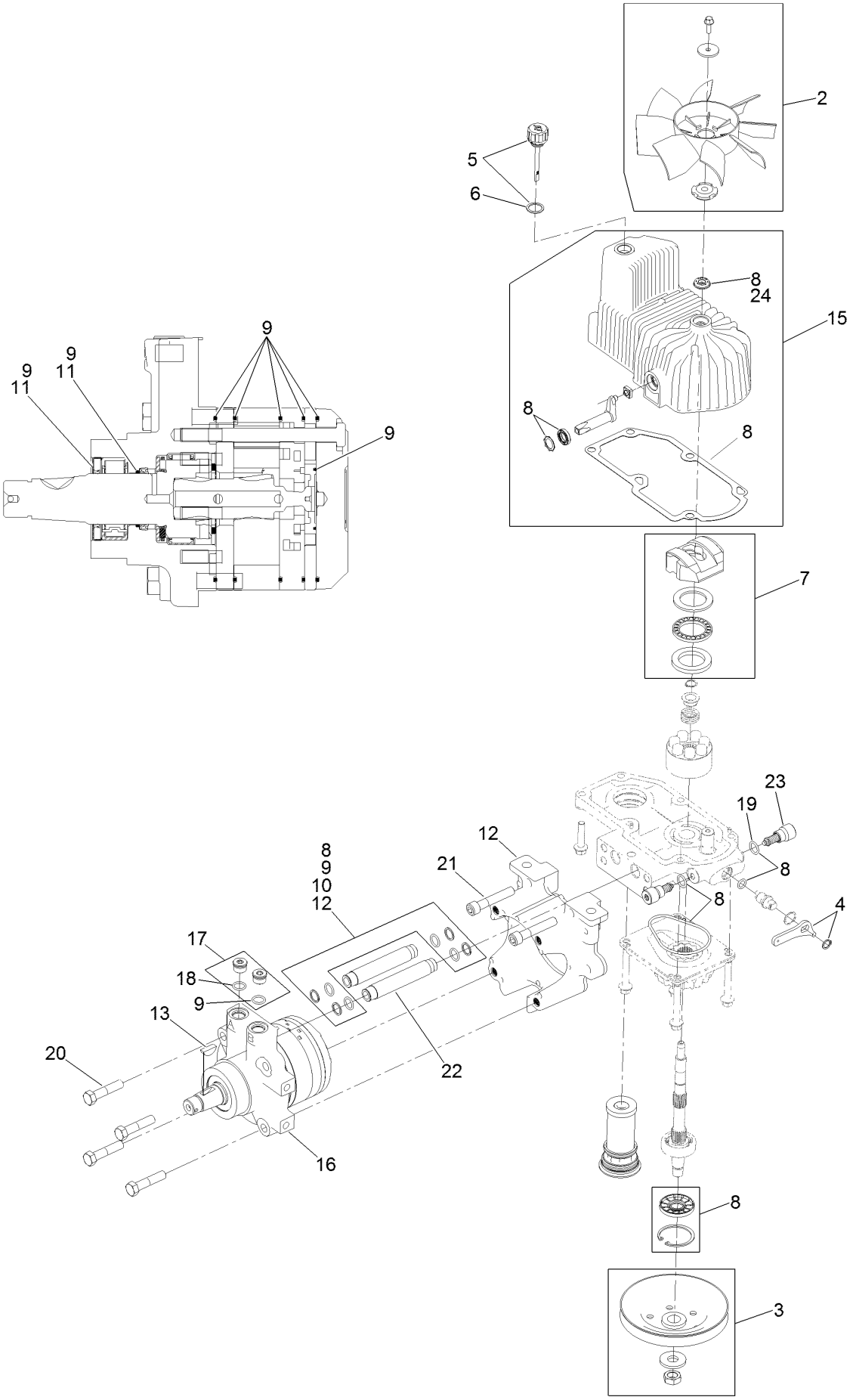

# LH Hydro Assembly No. 126-1323 (continued)

| Ref. | Part Number | Qty. | Description |
|---|---|---|---|
| 2 | 116-0233 | 1 | Fan Kit |
| 3 | 116-0234 | 1 | Pulley Kit |
| 4 | 116-0235 | 1 | Handle-Bypass Valve, Hydro |
| 5 | 116-0236 | 1 | Dipstick-Hydro W/Gasket |
| 6 | 116-0237 | 1 | Gasket-Dipstick, Hydro |
| 7 | 116-1367 | 1 | Swash Block Kit |
| 8 | 116-1368 | 1 | Pump Seal Kit |
| 9 | 116-1369 | 1 | Motor Seal Kit |
| 10 | 116-1370 | 1 | Tube Seal Kit |
| 11 | 116-1371 | 1 | Output Shaft Seal Kit |
| 12 | 116-5469 | 1 | Nose Cup-Uht |
| 13 | 3257-42 | 1 | Key-Woodruff |
| 15 | 116-3287 | 1 | Housing-LH |
| 16 | 116-8915 | 1 | Motor-Hydraulic LH 240Cc |
| 17 | 116-7901 | 1 | Magnetic Plugs Service Kit |
| 18 | 76-1900 | 2 | O-Ring |
| 19 | 116-8662 | 2 | O-Ring-Check Valve |
| 20 | 116-8974 | 4 | Screw HH |
| 21 | 116-8975 | 2 | Screw-HSH |
| 22 | 116-9922 | 2 | Hydraulic Tube Kit |
| 23 | 126-7466 | 2 | Shock Valve, 12Cc Hydro |
| 24 | 126-7711 | 1 | Seal-Fan Drive |
| 99 | 116-1373 | 1 | Flow Test Kit ● |
| 99 | 116-4245 | 1 | Puller-Pulley ● |

● Not illustrated

# RH Hydro Assembly No. 126-1324

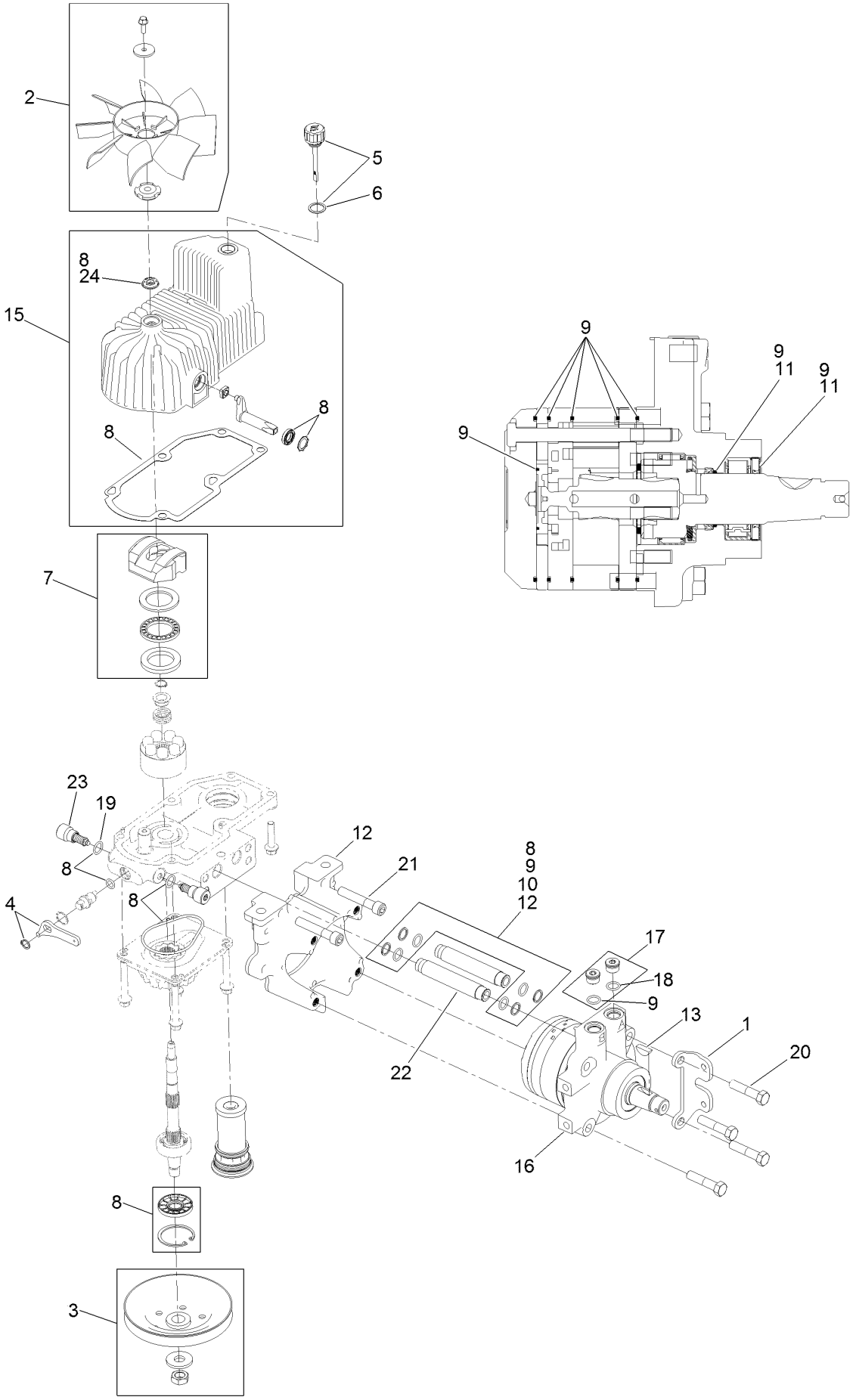

# RH Hydro Assembly No. 126-1324 (continued)

| Ref. | Part Number | Qty. | Description |
|---|---|---|---|
| 1 | 116-9063 | 1 | Mount-Shoe, Horse |
| 2 | 116-0233 | 1 | Fan Kit |
| 3 | 116-0234 | 1 | Pulley Kit |
| 4 | 116-0235 | 1 | Handle-Bypass Valve, Hydro |
| 5 | 116-0236 | 1 | Dipstick-Hydro W/Gasket |
| 6 | 116-0237 | 1 | Gasket-Dipstick, Hydro |
| 7 | 116-1367 | 1 | Swash Block Kit |
| 8 | 116-1368 | 1 | Pump Seal Kit |
| 9 | 116-1369 | 1 | Motor Seal Kit |
| 10 | 116-1370 | 1 | Tube Seal Kit |
| 11 | 116-1371 | 1 | Output Shaft Seal Kit |
| 12 | 116-5469 | 1 | Nose Cup-Uht |
| 13 | 3257-42 | 1 | Key-Woodruff |
| 15 | 116-3288 | 1 | Housing-RH |
| 16 | 116-8916 | 1 | Motor-Hydraulic RH 240Cc |
| 17 | 116-7901 | 1 | Magnetic Plugs Service Kit |
| 18 | 76-1900 | 2 | O-Ring |
| 19 | 116-8662 | 2 | O-Ring-Check Valve |
| 20 | 116-8974 | 4 | Screw HH |
| 21 | 116-8975 | 2 | Screw-HSH |
| 22 | 116-9922 | 2 | Hydraulic Tube Kit |
| 23 | 126-7466 | 2 | Shock Valve, 12Cc Hydro |
| 24 | 126-7711 | 1 | Seal-Fan Drive |
| 99 | 116-1373 | 1 | Flow Test Kit ● |
| 99 | 116-4245 | 1 | Puller-Pulley ● |

● Not illustrated

# Rear Wheel Assembly

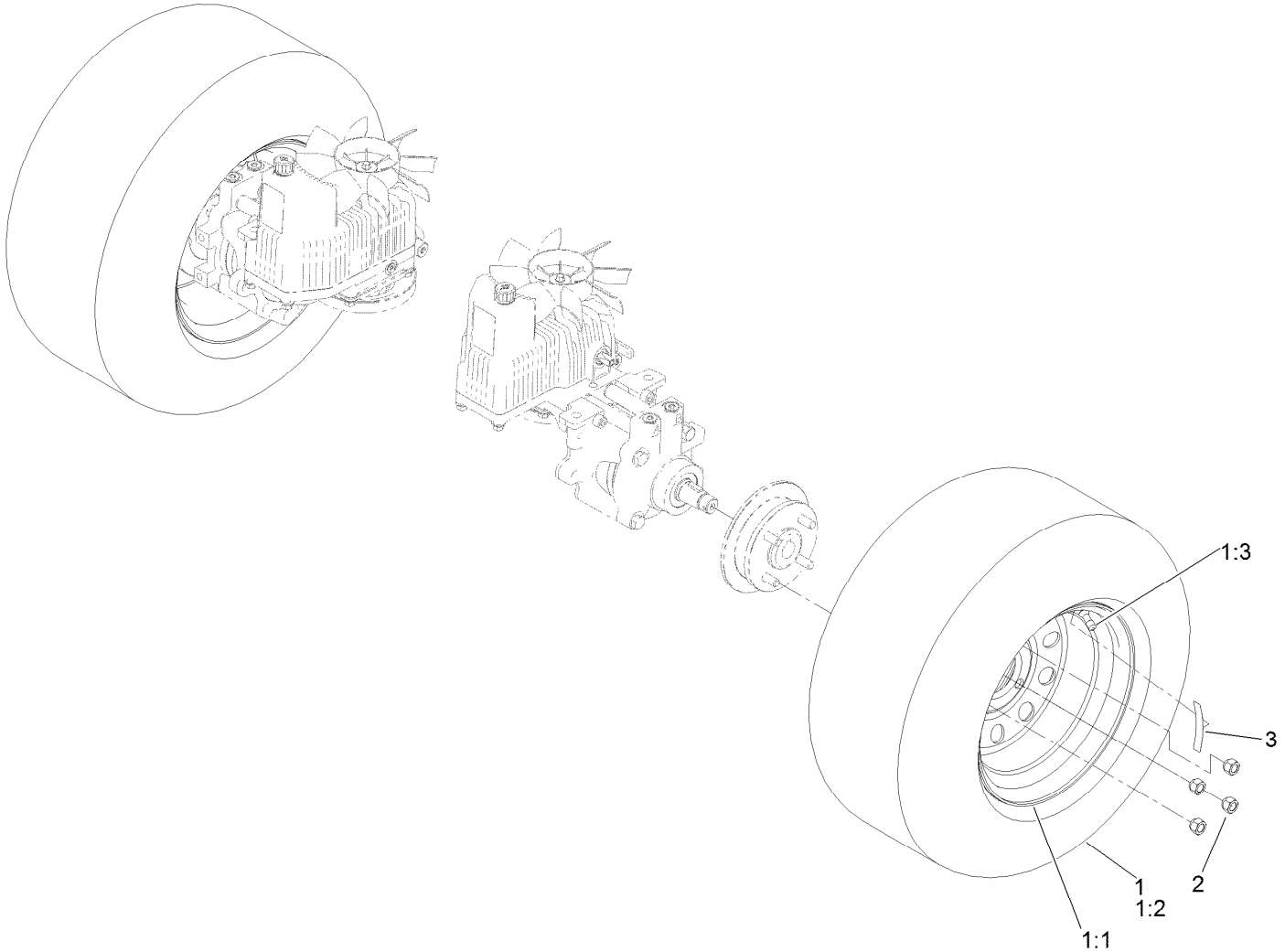

# Rear Wheel Assembly (continued)

| Ref. | Part Number | Qty. | Description |
|---|---|---|---|
| 1 | 127-9520 | 2 | Wheel And Tire ASM |
| 1:1 | 127-9517 | 1 | Wheel |
| 1:2 | 1-633993 | 1 | Tire |
| 1:3 | 232-27 | 1 | Stem-Valve |

| Ref. | Part Number | Qty. | Description |
|---|---|---|---|
| 2 | 242-50 | 8 | Nut-Lug |
| 3 | 126-2055 | 2 | Decal-Torque, Wheel Hub Lug |

# Park Brake Assembly

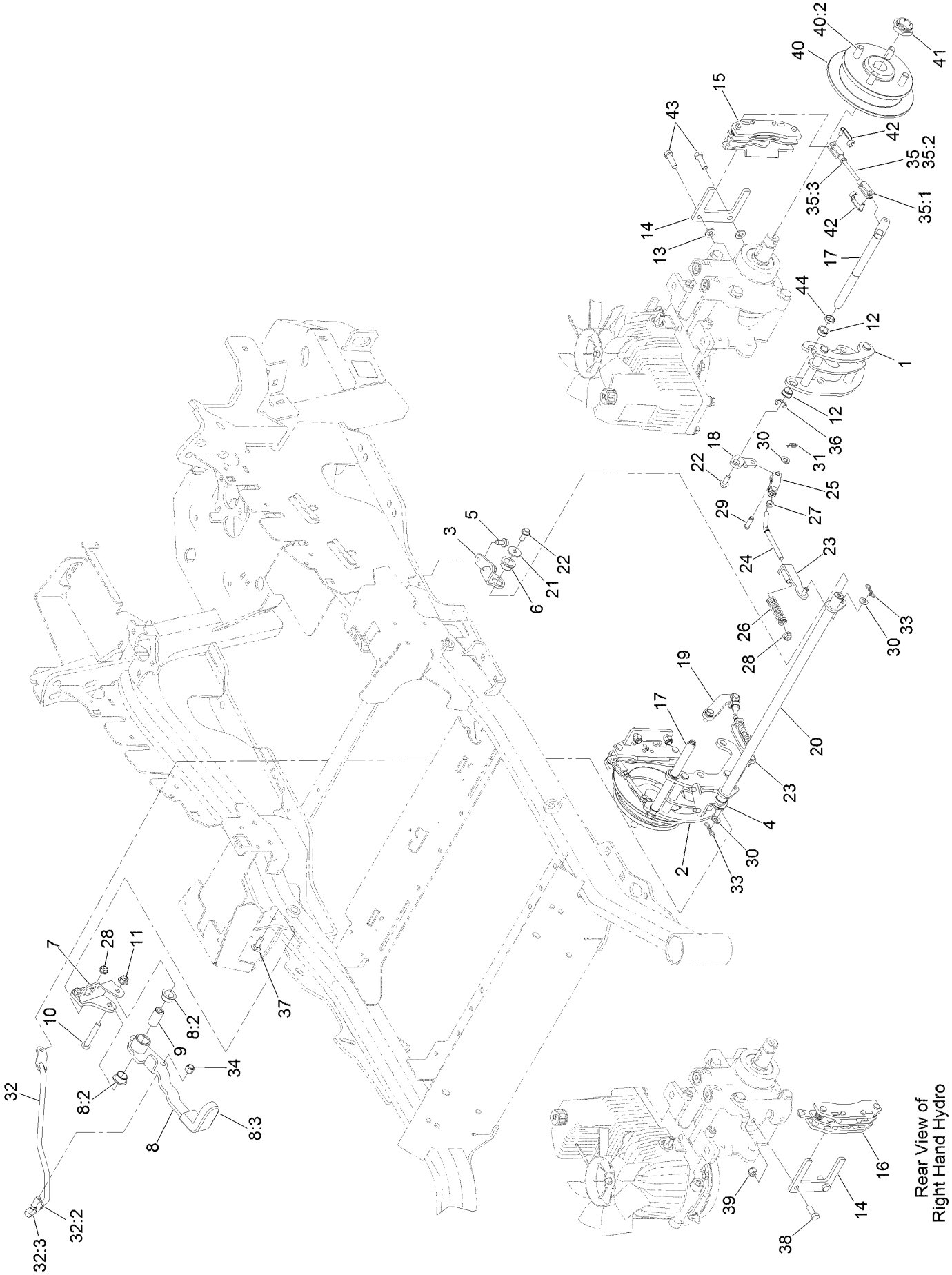

# Park Brake Assembly (continued)

| Ref. | Part Number | Qty. | Description |
|---|---|---|---|
| 1 | 126-4248 | 1 | Mount-Bellcrank, LH |
| 2 | 126-4249 | 1 | Mount-Bellcrank, RH |
| 3 | 116-9681 | 1 | Mount-Pivot, LH |
| 4 | 116-9682 | 1 | Mount-Pivot, RH |
| 5 | 32144-70 | 4 | Screw-HWHTF |
| 6 | 109-8054 | 2 | Bushing-Flange |
| 7 | 116-9096-01 | 1 | Bracket-Mount |
| 8 | 132-9406 | 1 | Brake Lever ASM W/ Grip |
| 8:2 | 109-8054 | 2 | Bushing-Flange |
| 8:3 | 132-4749 | 1 | Grip-Lever |
| 9 | 116-9117 | 1 | Handle-Pivot, Brake |
| 10 | 323-11 | 1 | Screw-HH |
| 11 | 104-8301 | 1 | Nut-HF, NI |
| 12 | 126-6199 | 4 | Bushing |
| 13 | 3256-24 | 2 | Washer-Flat |
| 14 | 109-0958 | 2 | Plate-Mount, Brake |
| 15 | 109-2889 | 1 | Caliper-Brake |
| 16 | 116-9103 | 1 | Caliper-Brake, RH |
| 17 | 126-4251 | 2 | Bellcrank |
| 18 | 126-3715 | 1 | Arm-Inner, LH |
| 19 | 126-3716 | 1 | Arm-Inner, RH |
| 20 | 116-9080 | 1 | Shaft-Cross |
| 21 | 115-7109 | 2 | Washer-Flat |
| 22 | 98-9940 | 4 | Screw-HHF |
| 23 | 116-9609 | 2 | Bracket-L |
| 24 | 116-9086 | 2 | Linkage-Mid |
| 25 | 126-3693 | 2 | Yoke-Offset |
| 26 | 116-9085 | 2 | Spring-Compression |
| 27 | 3220-2 | 2 | Nut-Jam |
| 28 | 104-8300 | 4 | Nut-HF, NI |
| 29 | 1-808280 | 2 | Pin-Clevis |
| 30 | 3256-23 | 4 | Washer-Plain |
| 31 | 116-6639 | 2 | Pin-Cotter, Locking |
| 32 | 116-9102 | 1 | Front Linkage ASM |
| 32:2 | 94-7572 | 1 | End-Tie Rod, RH |
| 32:3 | 3220-3 | 1 | Nut-HJ |
| 33 | 119-1415 | 2 | Pin-Cotter, Locking |
| 34 | 3296-6 | 1 | Nut-Lock |
| 35 | 126-7587 | 2 | Rear Linkage ASM |
| 35:1 | 126-7588 | 2 | Yoke |
| 35:2 | 116-9069 | 1 | Linkage, Rear |
| 35:3 | 3220-1 | 1 | Nut-Jam |
| 36 | 32120-19 | 2 | E-Ring |
| 37 | 3230-2 | 2 | Bolt-CARR |
| 38 | 323-6 | 2 | Screw-HH |
| 39 | 3296-39 | 2 | Nut-Lock, NI |
| 40 | 116-1746 | 2 | Wheel Hub ASM |
| 40:2 | 116-1696 | 4 | Stud-Wheel |
| 41 | 116-1399 | 2 | Locknut |
| 42 | 126-6395 | 4 | Pin-Clevis, Spring |
| 43 | 92-5727 | 2 | Screw-Lock, Patch |
| 44 | 126-6200 | 2 | Spacer |

# Fuel System Assembly

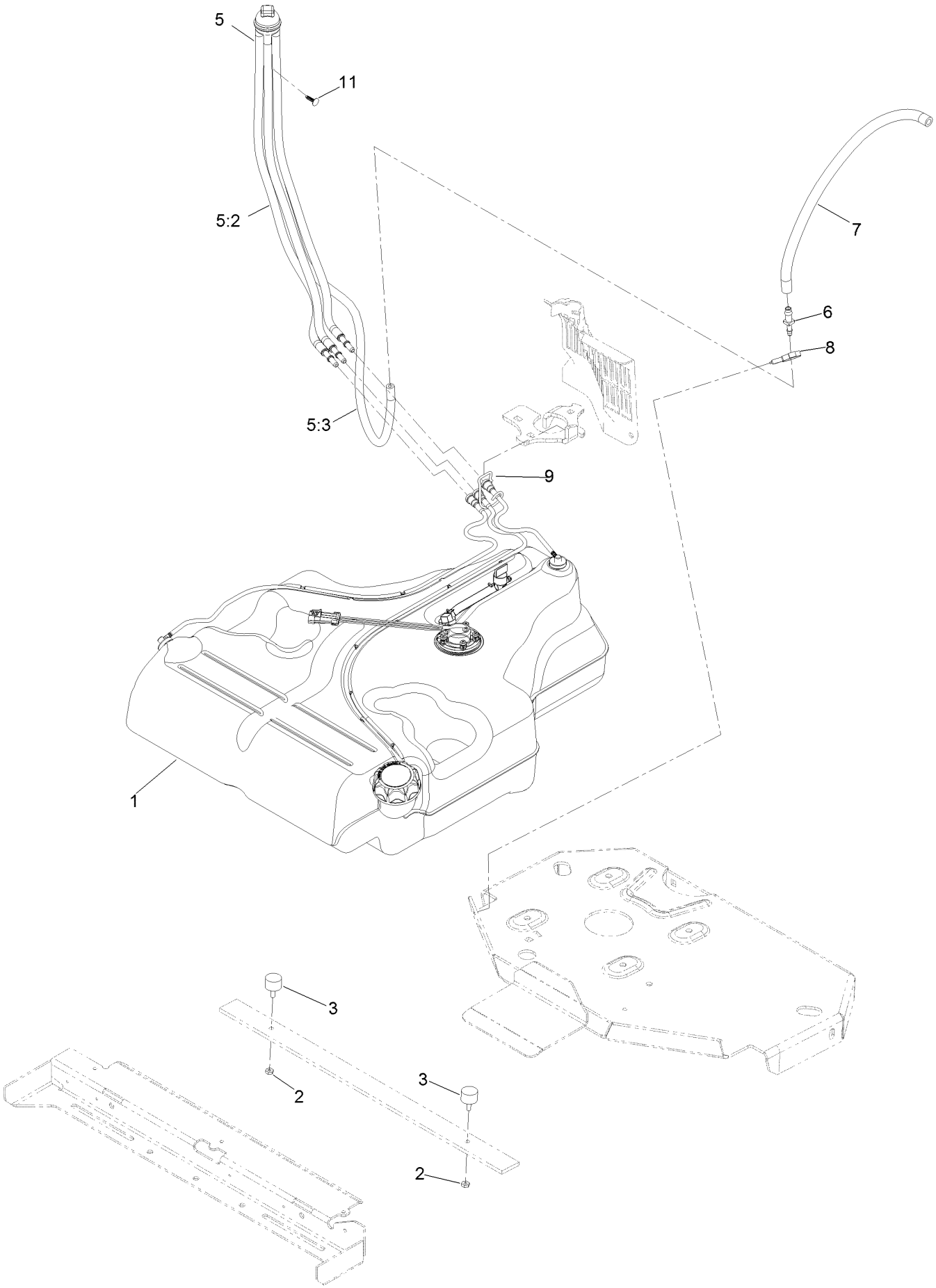

# Fuel System Assembly (continued)

| Ref. | Part Number | Qty. | Description |
|---|---|---|---|
| 1 | 135-0643 | 1 | Fuel Tank ASM |
| 2 | 3218-1 | 2 | Nut-Jam |
| 3 | 1-523420 | 2 | Bumper |
| 5 | 127-0583 | 1 | Fuel Manifold Vent ASM |
| 5:2 | 109-0302 | 3 | Hose-Fuel |
| 5:3 | 108-5376 | 1 | Hose-Fuel |
| 6 | 116-5072 | 1 | Fitting-Straight |
| 7 | 116-5087 | 1 | Hose-Fuel |
| 8 | 105-1853 | 1 | Clamp-Hose |
| 9 | 116-6005 | 1 | Retainer-Line, Vapor |
| 11 | 125-8067 | 1 | Plug-Plastic |

# Fuel Tank Assembly No. 135-0643

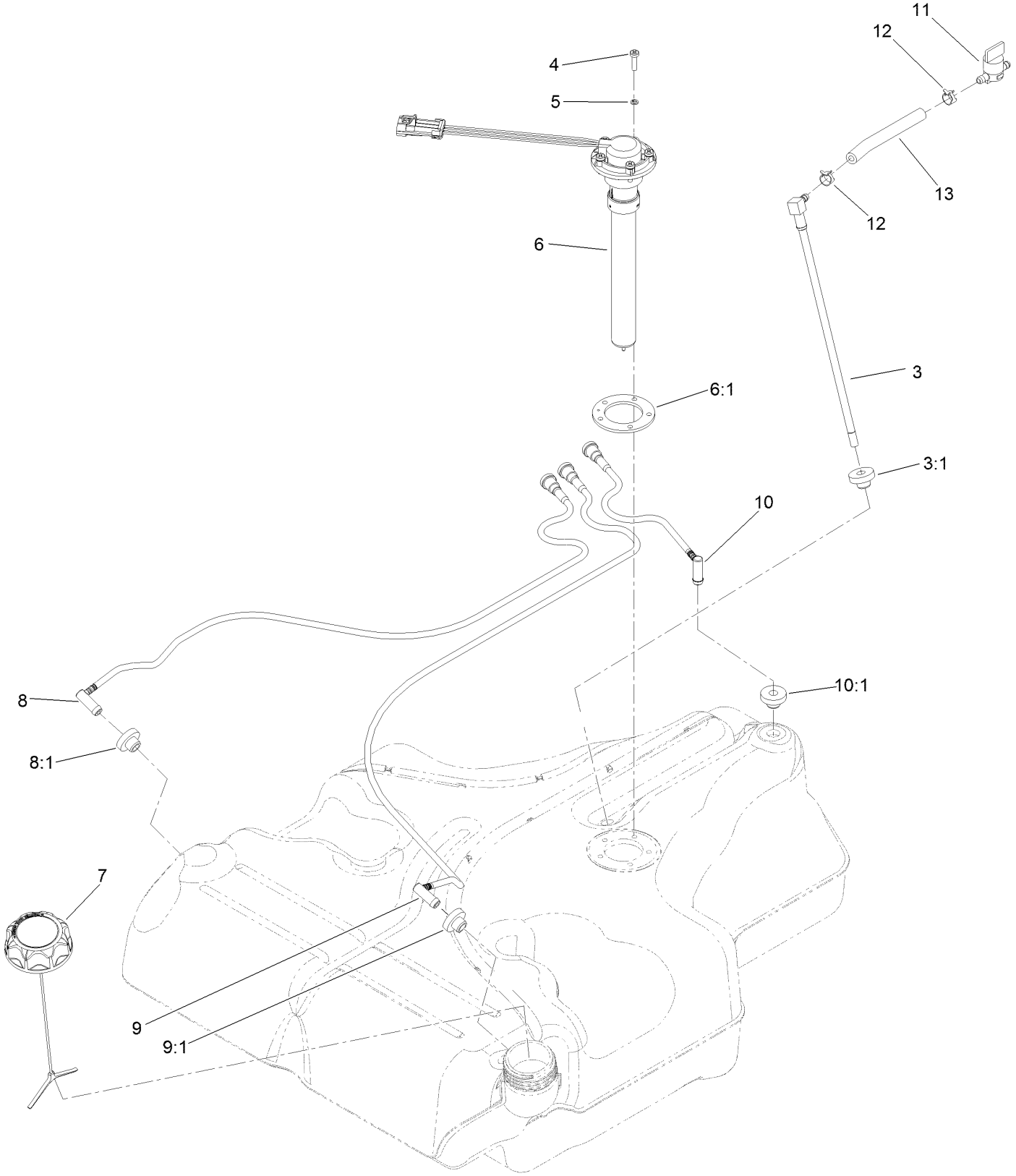

# Fuel Tank Assembly No. 135-0643 (continued)

| Ref. | Part Number | Qty. | Description |
|---|---|---|---|
| 3 | 116-2459 | 1 | Fuel Line Kit (With Grommet) |
| 3:1 | 46-6560 | 1 | Bushing |
| 4 | 3290-500 | 5 | Screw-PPH |
| 5 | 3253-17 | 5 | Washer-Lock |
| 6 | 126-3913 | 1 | Float-Sender, Fuel |
| 6:1 | 126-3950 | 1 | Gasket-Sender |
| 7 | 126-1789 | 1 | Cap-Fuel, Ratcheting |
| 8 | 116-2460 | 1 | RH Vent Line Kit (With Grommet) |
| 8:1 | 46-6560 | 1 | Bushing |
| 9 | 116-2461 | 1 | LH Vent Line Kit (With Grommet) |
| 9:1 | 46-6560 | 1 | Bushing |
| 10 | 116-2462 | 1 | Rear Vent Line Kit (With Grommet) |
| 10:1 | 46-6560 | 1 | Bushing |
| 11 | 1-603770 | 1 | Valve-Fuel |
| 12 | 2412-98 | 2 | Clamp-Hose |
| 13 | 109-0650 | 1 | Hose-Fuel |

# Seat Mounting Assembly

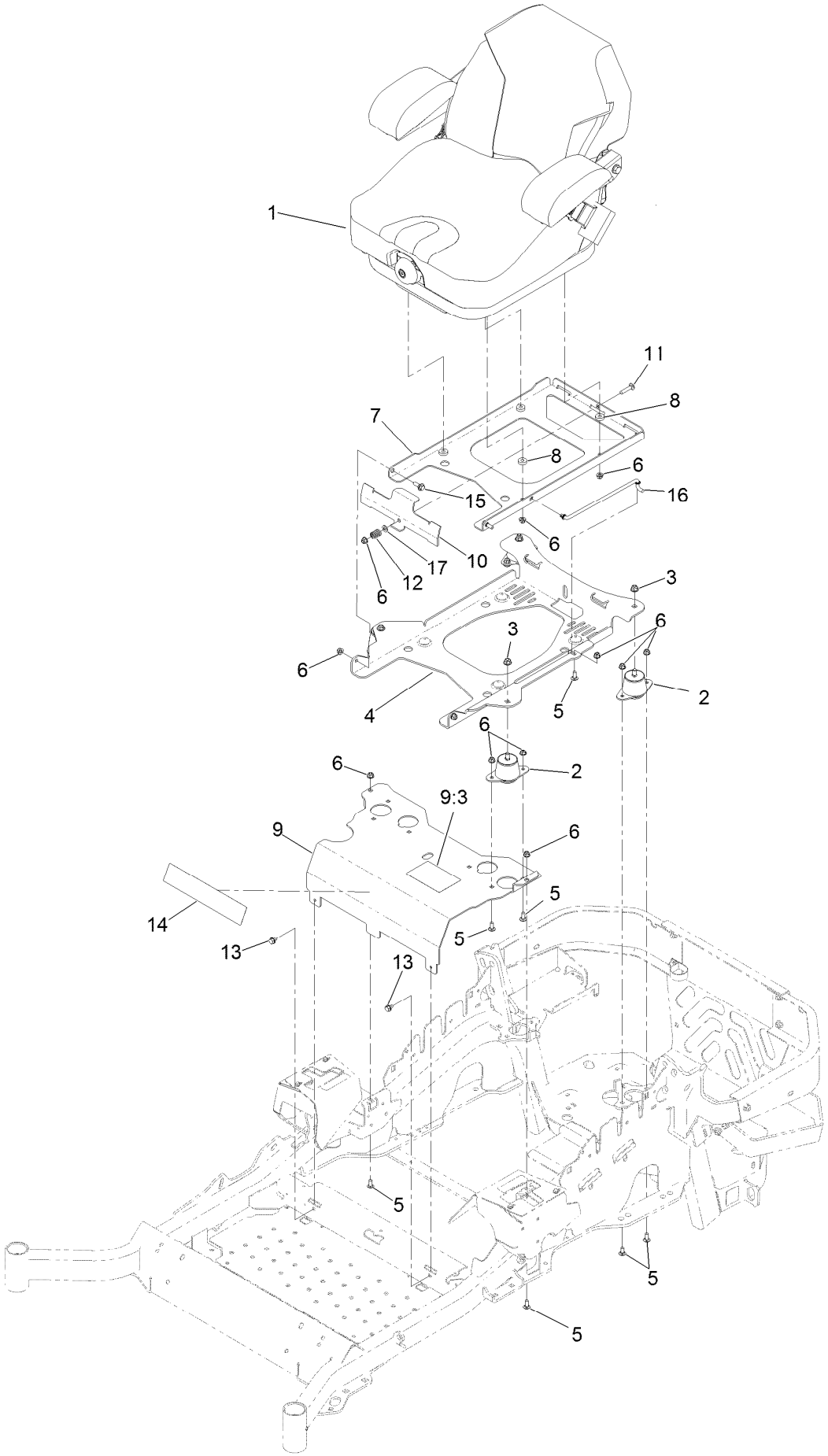

# Seat Mounting Assembly (continued)

| Ref. | Part Number | Qty. | Description |
|---|---|---|---|
| 1 | 125-3107 | 1 | Suspension Seat ASM |
| 2 | 109-9034 | 4 | Isolator-Seat |
| 3 | 104-8301 | 4 | Nut-HF, NI |
| 4 | 116-3860-03 | 1 | Plate-Tilt, Seat Support |
| 5 | 3230-23 | 11 | Screw-CARR |
| 6 | 104-8300 | 18 | Nut-HF, NI |
| 7 | 116-3859-03 | 1 | Plate-Frame, Seat |
| 8 | 26-4840 | 4 | Spacer-Pin, Mounting |
| 9 | 125-9385 | 1 | Seat Mount ASM |

| Ref. | Part Number | Qty. | Description |
|---|---|---|---|
| 9:3 | 125-9383 | 1 | Decal-Service Aid |
| 10 | 109-9881-03 | 1 | Plate-Latch, Seat |
| 11 | 3230-4 | 1 | Bolt-CARR |
| 12 | 107-3017 | 1 | Spring-Compression |
| 13 | 9266934 | 2 | Screw |
| 14 | 119-2507 | 1 | Decal |
| 15 | 116-1297 | 2 | Screw-Shoulder |
| 16 | 116-0070 | 1 | Rod-Prop |
| 17 | 3256-23 | 1 | Washer-Plain |

# Seat Assembly No. 125-3107

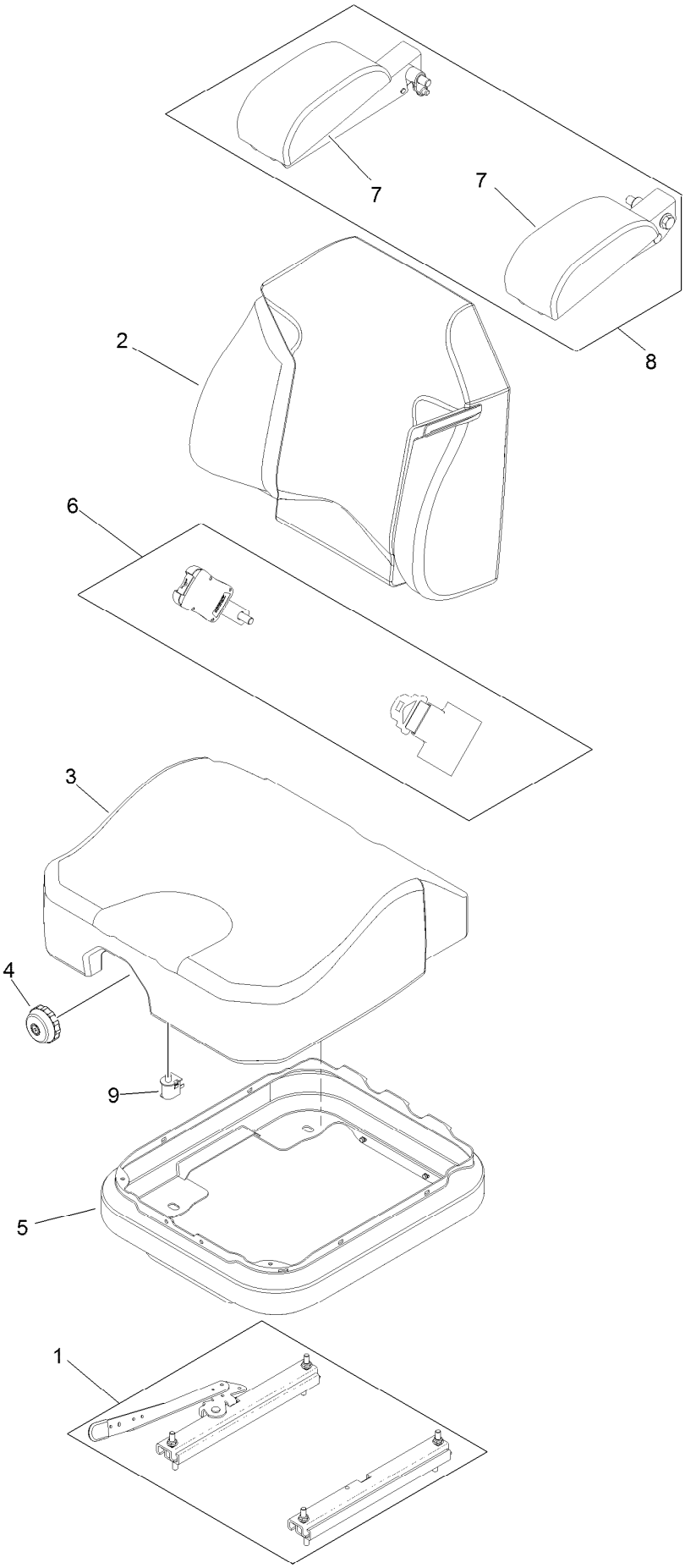

# Seat Assembly No. 125-3107 (continued)

| Ref. | Part Number | Qty. | Description |
|---|---|---|---|
| 1 | 116-8910 | 1 | Seat Track Set |
| 2 | 125-3112 | 1 | Cover-Back |
| 3 | 125-3111 | 1 | Cover-Cushion |
| 4 | 116-8911 | 1 | Knob-Adjuster |
| 5 | 116-5659 | 1 | Cover-Suspension Bellows |
| 6 | 126-2061 | 1 | Seat Belt Service Kit |
| 7 | 109-9802 | 1 | Arm Rest Pad Set |
| 8 | 109-9803 | 1 | Arm Rest Set |
| 9 | 82-2190 | 1 | Switch-Bail |

# Motion Control Assembly

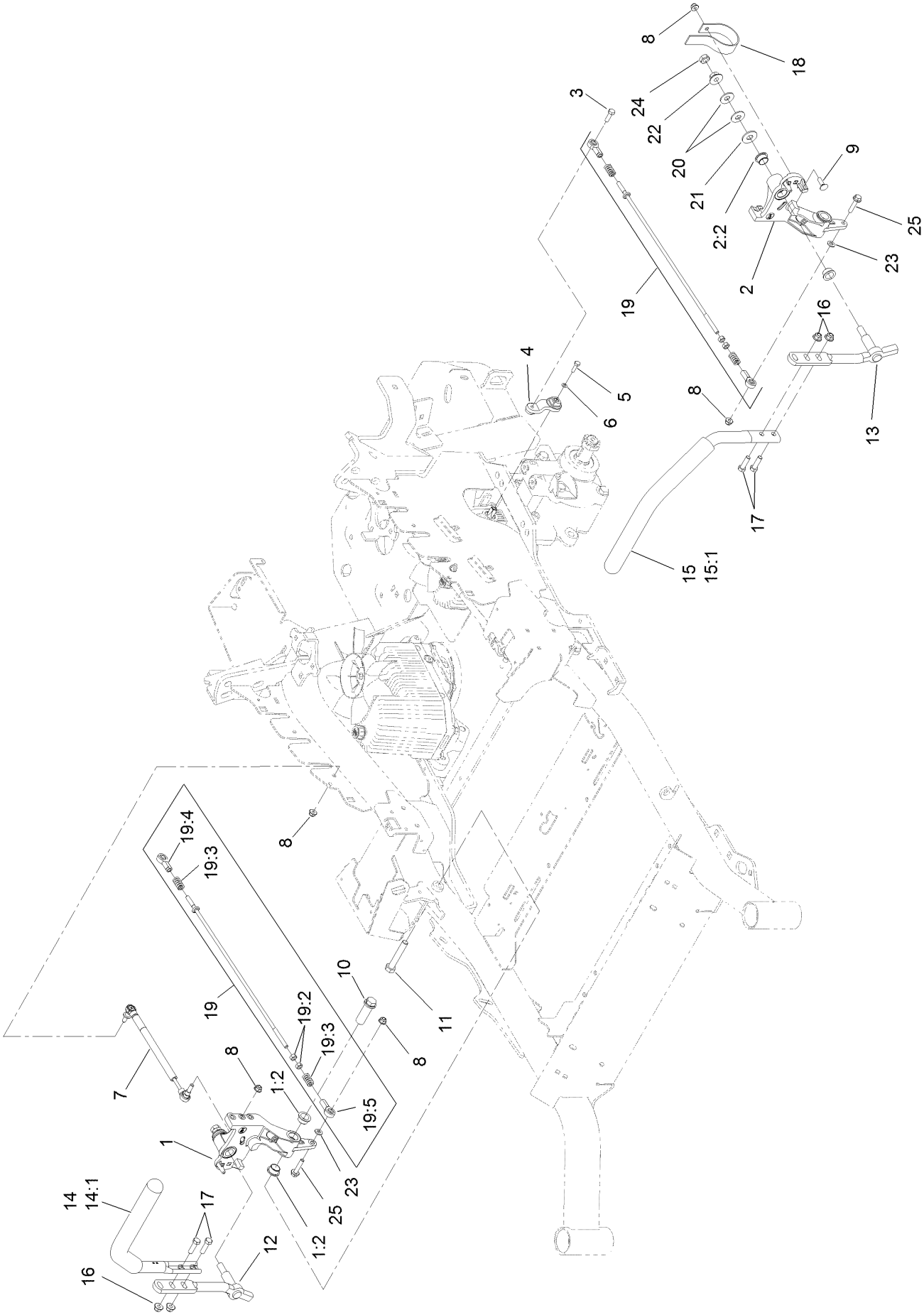

# Motion Control Assembly (continued)

| Ref. | Part Number | Qty. | Description |
|---|---|---|---|
| 1 | 116-0880 | 1 | RH Motion Control And Bushing ASM |
| 1:2 | 109-8054 | 4 | Bushing-Flange |
| 2 | 116-0881 | 1 | LH Motion Control And Bushing ASM |
| 2:2 | 109-8054 | 4 | Bushing-Flange |
| 3 | 116-0648 | 2 | Screw-HH, Thread Locking ● |
| 4 | 109-4581 | 2 | Arm-Control, Pump |
| 5 | 9080046 | 2 | Screw-HH ● |
| 6 | 1-303435 | 2 | Washer-Spring |
| 7 | 116-0027 | 2 | Damper-Control, Motion |
| 8 | 104-8300 | 8 | Nut-HF, NI |
| 9 | 3230-2 | 2 | Bolt-CARR |
| 10 | 109-5891 | 2 | Hub-Threaded |
| 11 | 325-12 | 2 | Screw-HH |
| 12 | 116-0039 | 1 | Lever-Control Motion, RH |
| 13 | 116-0040 | 1 | Lever-Control Motion, LH |

| Ref. | Part Number | Qty. | Description |
|---|---|---|---|
| 14 | 109-6589 | 1 | RH Steering Handle ASM |
| 14:1 | 109-5668 | 1 | Grip-Control, Lever |
| 15 | 109-6590 | 1 | LH Steering Handle ASM |
| 15:1 | 109-5668 | 1 | Grip-Control, Lever |
| 16 | 104-8301 | 4 | Nut-HF, NI |
| 17 | 323-7 | 4 | Screw-HH |
| 18 | 109-5575 | 2 | Spring-Leaf |
| 19 | 109-8106 | 2 | Front Pump Linkage ASM |
| 19:2 | 3219-2 | 2 | Nut-Hex |
| 19:3 | 1-323245 | 2 | Spring-Compression |
| 19:4 | 1-633152 | 1 | Balljoint-LH |
| 19:5 | 1-543017 | 1 | Balljoint-RH |
| 20 | 109-9505 | 4 | Washer-Spring |
| 21 | 3256-6 | 2 | Washer-Flat |
| 22 | 32128-56 | 2 | Nut-HF |
| 23 | 3256-23 | 2 | Washer-Plain |
| 24 | 3218-5 | 2 | Nut-Jam |
| 25 | 115-1794 | 2 | Screw-HHF |

● Use Pro-Lock, Nut Type (P/N 1-840022, .5ml tube) on threads.

# Control Console Assembly

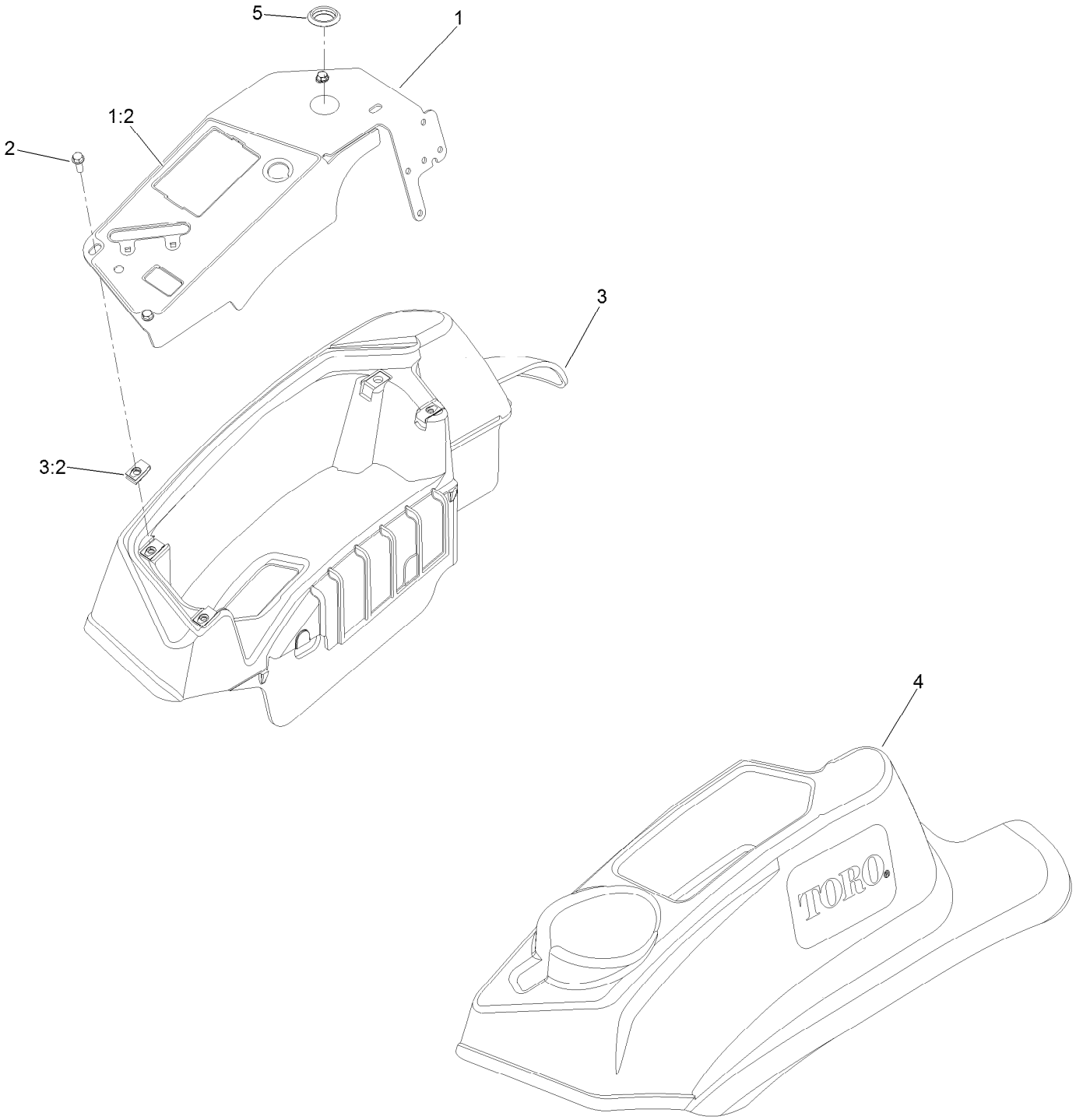

# Control Console Assembly (continued)

| Ref. | Part Number | Qty. | Description |
|---|---|---|---|
| 1 | 137-9200 | 1 | Control Panel ASM |
| 1:2 | 137-9208 | 1 | Decal-Panel, Control |
| 2 | 32105-15 | 4 | Screw-HWH |
| 3 | 119-2603 | 1 | RH Console ASM |
| 3:2 | 107069 | 4 | Clip |
| 4 | 119-2602 | 1 | Console-LH |
| 5 | 116-1875 | 1 | Plug-Plastic |

# Electrical Assembly

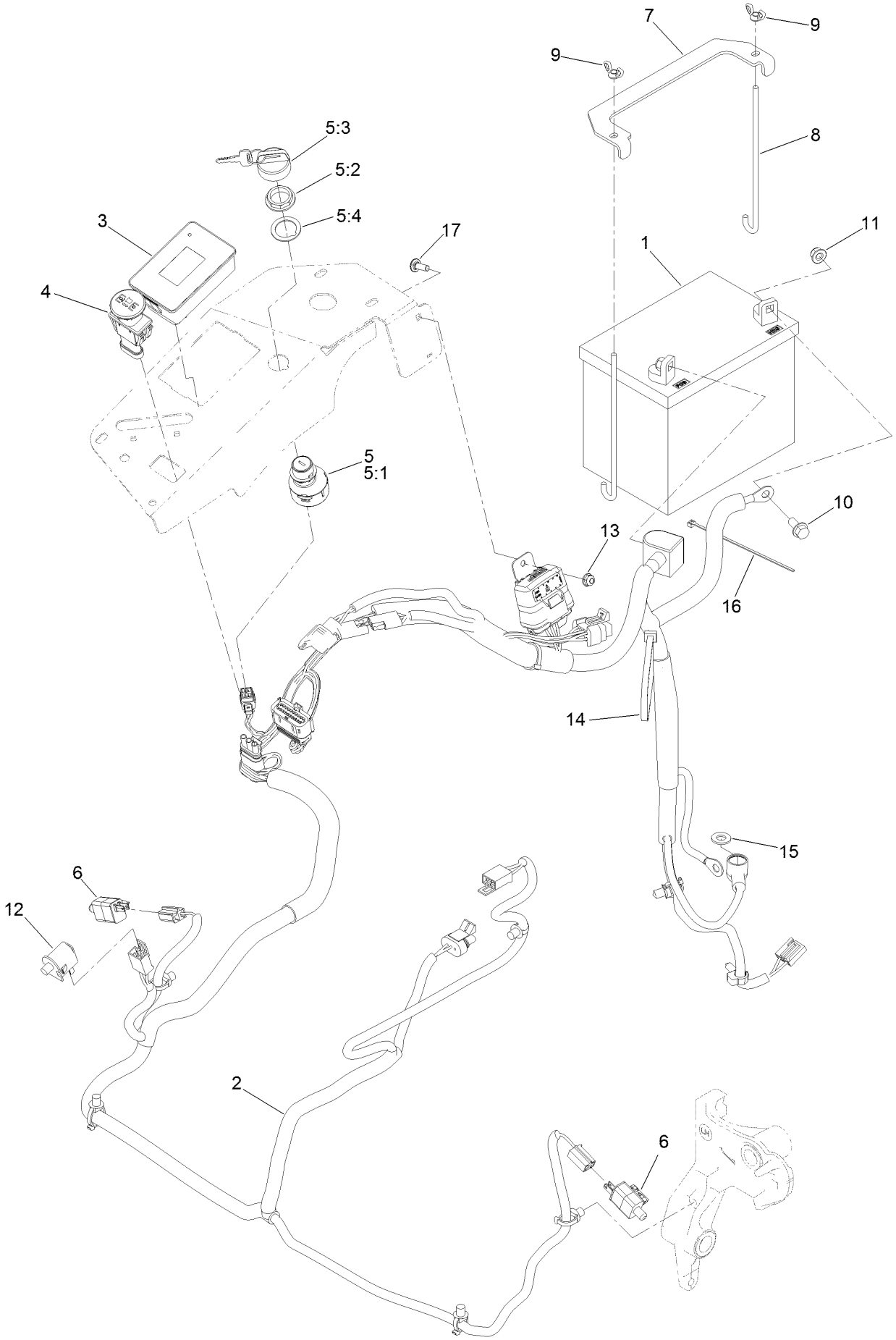

# Electrical Assembly (continued)

| Ref. | Part Number | Qty. | Description |
|---|---|---|---|
| 1 | 104-8162 | 1 | Battery-Dry |
| 2 | 135-5753 | 1 | Harness-Wire ASM |
| 3 | 135-2471 | 1 | Meter-Hour |
| 4 | 126-6187 | 1 | Switch-PTO, Sealed |
| 5 | 126-6285 | 1 | Ignition Switch ASM |
| 5:1 | | 1 | Switch-Ignition ● |
| 5:2 | 108-8660 | 1 | Nut-Mounting |
| 5:3 | 106-5270 | 1 | Ignition Key Set |
| 5:4 | 108-8659 | 1 | Washer-Backup |
| 6 | 110-6765 | 2 | Switch |
| 7 | 116-0042-03 | 1 | Strap-Tie Down, Battery |

| Ref. | Part Number | Qty. | Description |
|---|---|---|---|
| 8 | 1-633651 | 2 | Bolt-Holddown |
| 9 | 1-543792 | 2 | Wingnut |
| 10 | 3234-5 | 2 | Screw-HHF |
| 11 | 104-8300 | 2 | Nut-HF, NI |
| 12 | 82-2190 | 1 | Switch-Bail |
| 13 | 104-7201 | 1 | Nut-HF |
| 14 | 1-303335 | 1 | Tie-Plastic |
| 15 | 3256-24 | 1 | Washer-Flat |
| 16 | 1-303287 | 1 | Tie-Cable |
| 17 | 1-807512 | 1 | Bolt-CARR |

● Not serviced separately

# Wire Harness Assembly No. 135-5753

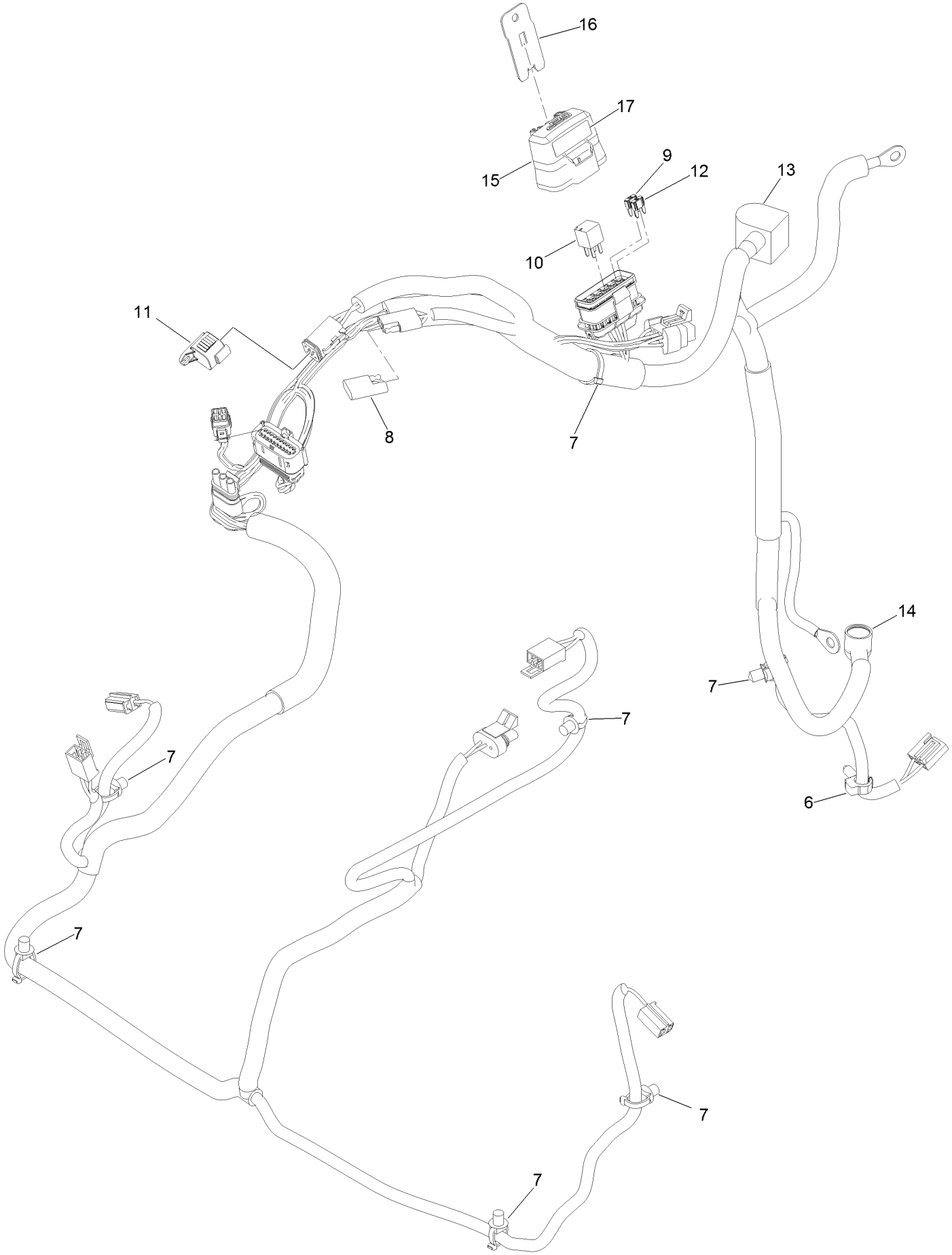

# Wire Harness Assembly No. 135-5753 (continued)

| Ref. | Part Number | Qty. | Description |
|---|---|---|---|
| 6 | 32180-037 | 2 | Clip-Harness |
| 7 | 32180-030 | 6 | Clip-Tie |
| 8 | 32180-197 | 1 | Cap-Plug |
| 9 | 121-8868 | 1 | Fuse-Mini Blade, 20 Amp |
| 10 | 126-3991 | 1 | Relay-Micro |
| 11 | 32180-156 | 1 | Cap-Plug, 6 Way |
| 12 | 121-8867 | 1 | Fuse-Mini Blade, 15 Amp |
| 13 | 126-8876 | 1 | Insulator-Battery |
| 14 | 1-543393 | 1 | Insulator-Solenoid |
| 15 | 32180-176 | 1 | Cover-Block, Fuse |
| 16 | 32180-177 | 1 | Clip-Mounting |
| 17 | 126-7875 | 1 | Decal-Fuse |

# Deck Lift Assembly

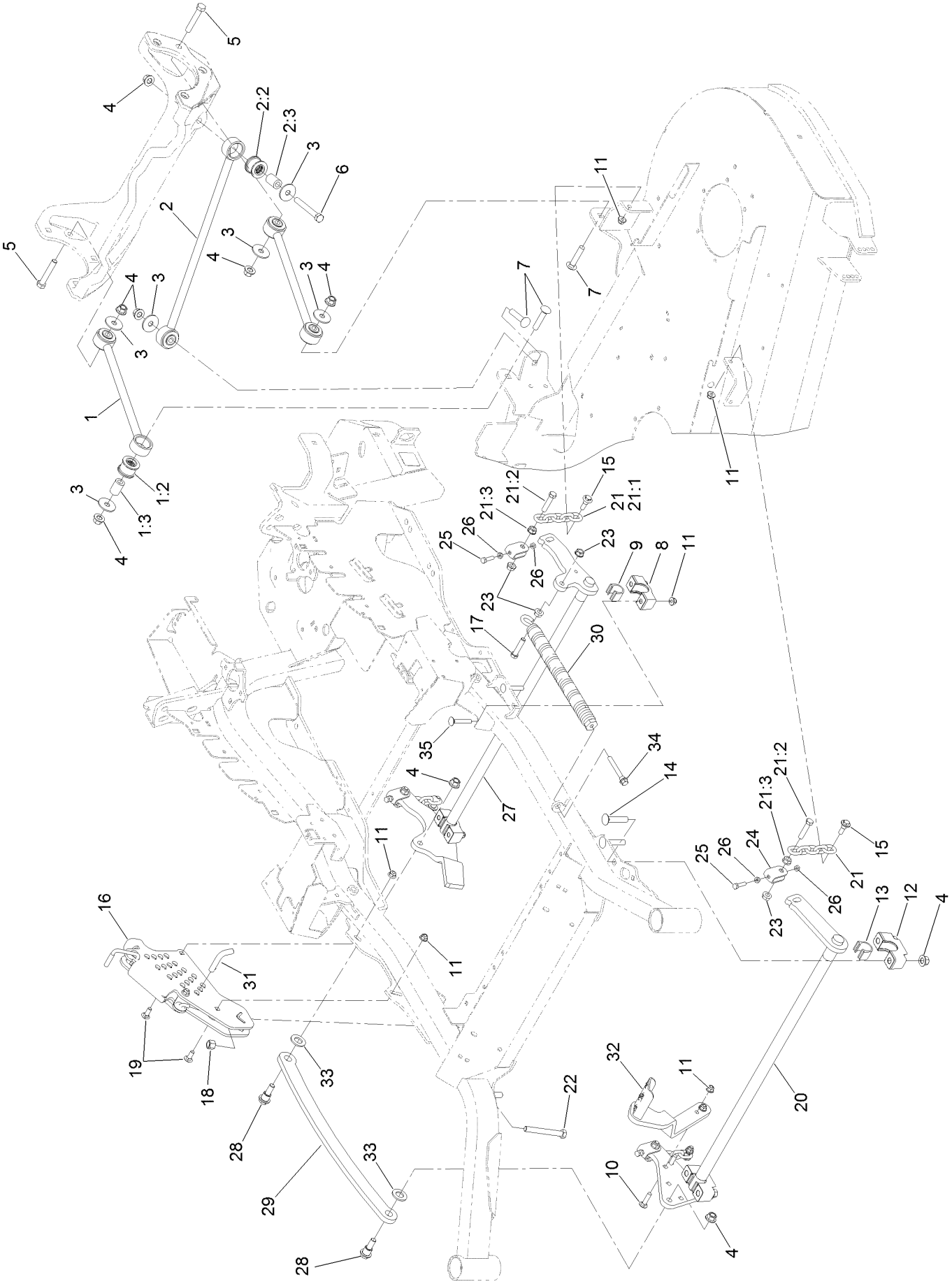

# Deck Lift Assembly (continued)

| Ref. | Part Number | Qty. | Description |
|---|---|---|---|
| 1 | 109-7952 | 2 | Deck Strut ASM |
| 1:2 | 109-5009 | 2 | Bushing-Suspension, Rubber |
| 1:3 | 109-5010 | 2 | Spacer |
| 2 | 109-5013 | 1 | Panhard Rod ASM |
| 2:2 | 109-5009 | 2 | Bushing-Suspension, Rubber |
| 2:3 | 109-5010 | 2 | Spacer |
| 3 | 86-1990 | 6 | Washer-Thrust |
| 4 | 99-5107 | 12 | Nut-Lock |
| 5 | 325-12 | 2 | Screw-HH |
| 6 | 325-17 | 1 | Screw-HH |
| 7 | 3233-34 | 3 | Screw-CARR |
| 8 | 127-0553 | 2 | Support-Cross Shaft, Bearing Rear |
| 9 | 109-7173 | 2 | Bearing-Cross Shaft, Rear |
| 10 | 3231-4 | 2 | Screw-CARR |
| 11 | 104-8301 | 12 | Nut-HF, NI |
| 12 | 109-9409 | 2 | Support-Cross Shaft, Bearing |
| 13 | 109-9410 | 2 | Bearing-Cross Shaft, Front |
| 14 | 116-1700 | 4 | Bolt-CARR |
| 15 | 109-9840 | 4 | Screw-Shoulder, HHF |
| 16 | 109-7438 | 1 | HOC ASM |
| 17 | 109-9065 | 1 | Screw-HH |
| 18 | 3296-23 | 1 | Nut-Lock, NI |
| 19 | 3231-2 | 2 | Bolt-CARR |
| 20 | 126-2475-03 | 1 | Decklift-Front |
| 21 | 116-0756 | 4 | Deck Lift Chain ASM |
| 21:1 | 1-633447 | 1 | Chain-Lift, Deck |
| 21:2 | 109-9065 | 1 | Screw-HH |
| 21:3 | 32128-37 | 1 | Nut-HF |
| 22 | 116-0559 | 1 | Bolt-TAP |
| 23 | 32128-37 | 6 | Nut-HF |
| 24 | 109-9066 | 4 | Yoke-Adjust, Deck |
| 25 | 322-47 | 4 | Screw-HH |
| 26 | 3218-2 | 8 | Nut-Jam |
| 27 | 116-0459-03 | 1 | Lift-Deck, Rear |
| 28 | 116-0780 | 2 | Screw-Shoulder, HHF |
| 29 | 116-0797-03 | 1 | Link-Lift, Deck |
| 30 | 116-0000 | 1 | Spring-Extension |
| 31 | 116-5584 | 1 | Pin-HOC |
| 32 | 116-1919-01 | 1 | Lever-Foot |
| 33 | 3256-28 | 2 | Washer-Flat |
| 34 | 92-7674 | 1 | Bolt-Shoulder |
| 35 | 3231-7 | 4 | Screw-CARR |

# Height-of-Cut Assembly No. 109-7438

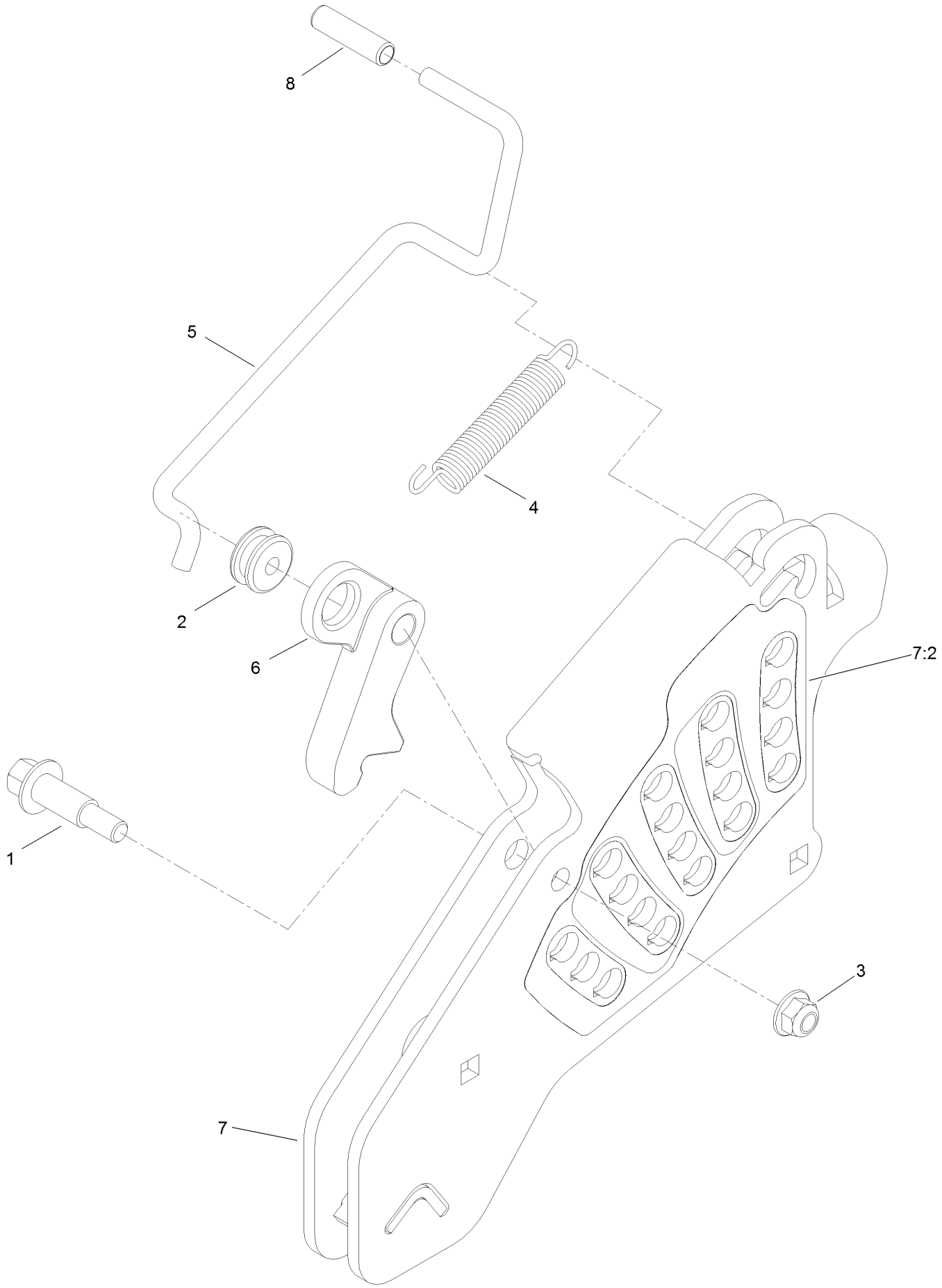

# Height-of-Cut Assembly No. 109-7438 (continued)

| Ref. | Part Number | Qty. | Description |
|---|---|---|---|
| 1 | 62-1330 | 1 | Bolt-Shoulder |
| 2 | 109-7130 | 1 | Grommet |
| 3 | 104-8301 | 1 | Nut-HF, NI |
| 4 | 109-7124 | 1 | Spring-Extension |
| 5 | 109-7128 | 1 | Rod-Lock, Transport |
| 6 | 116-0118 | 1 | Pawl-Transport, HOC |
| 7 | 109-7335 | 1 | HOC Plate ASM |
| 7:2 | 126-4398 | 1 | Decal-HOC |
| 8 | 109-8250 | 1 | Grip-Lever |

# Engine, Clutch and Muffler Assembly

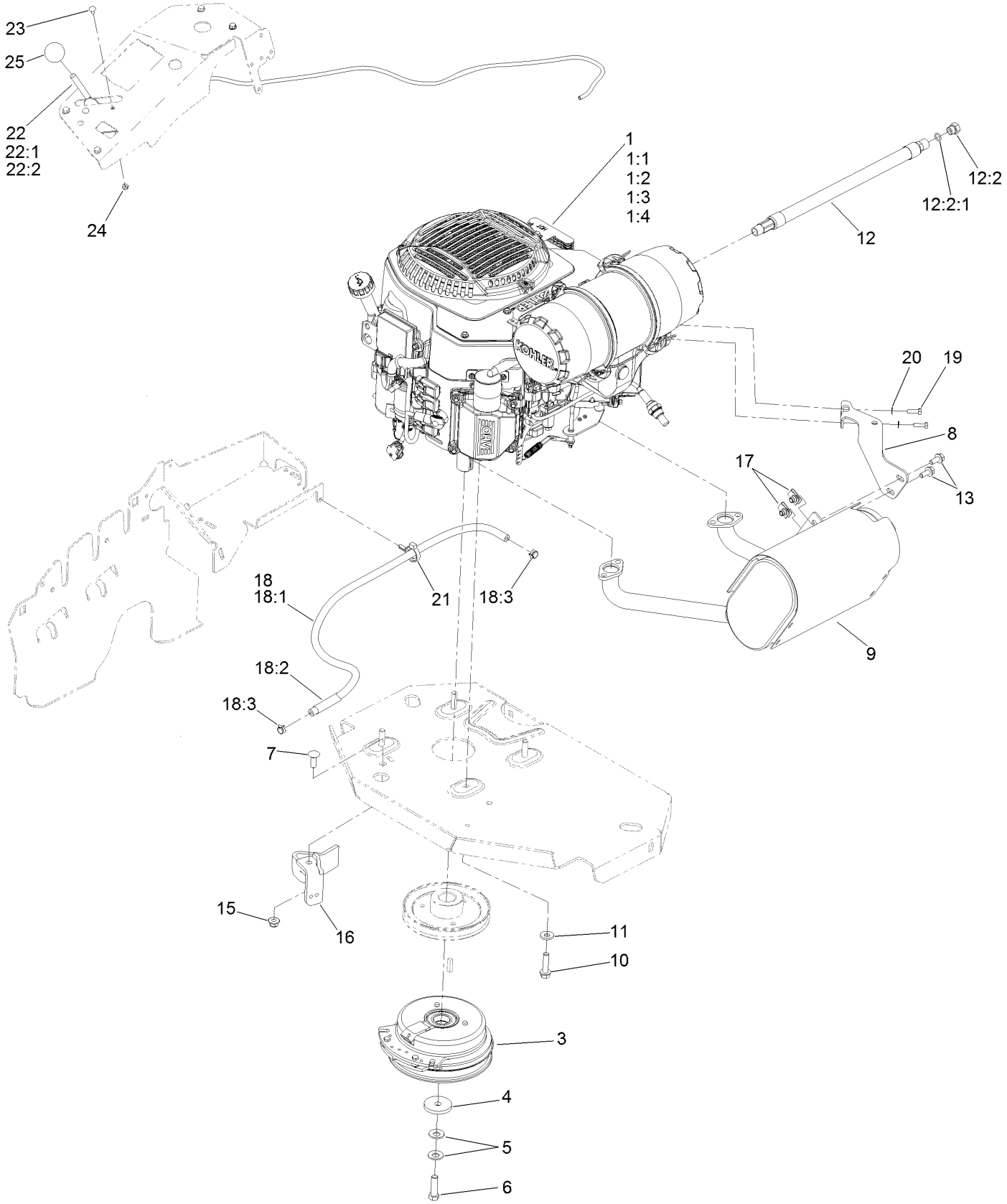

# Engine, Clutch and Muffler Assembly (continued)

| Ref. | Part Number | Qty. | Description |
|---|---|---|---|
| 1 | | 1 | Engine-Kohler Ecv740-3059 ▲◆ |
| 1:1 | | 1 | Kohler 52 050 02-S Engine Oil Filter ▲◆ |
| 1:2 | | 1 | Kohler 25 083 01-S Engine Air Filter ▲◆ |
| 1:3 | | 1 | Kohler 25 083 04-S Safety Filter ▲◆ |
| 1:4 | | 1 | Kohler 25 050 42-S Fuel Filter ▲◆ |
| 3 | 116-1620 | 1 | Clutch Kit |
| 4 | 109-6919 | 1 | Washer-Clutch |
| 5 | 1-603610 | 2 | Washer-Spring |
| 6 | 109-9761 | 1 | Screw-HH ❑ |
| 7 | 3231-22 | 1 | Screw-CARR |
| 8 | 116-4297 | 1 | Muffler Bracket Kit |
| 9 | 135-2127 | 1 | Muffler Kit |
| 10 | 32144-102 | 4 | Screw-HWH |
| 11 | 98-5975 | 4 | Washer-Belleville |
| 12 | 116-5316 | 1 | Oil Drain Hose ASM ■ |
| 12:2 | 353-508 | 1 | Plug-HH ● |
| 12:2:1 | 237-42 | 1 | O-Ring |
| 13 | 3234-5 | 2 | Screw-HHF |
| 15 | 104-8301 | 1 | Nut-HF, NI |
| 16 | 116-2612-01 | 1 | Clutch-Anchor |
| 17 | 94-2413 | 2 | Nut-U |
| 18 | 117-3893 | 1 | Fuel Line ASM |
| 18:1 | 109-0273 | 1 | Hose-Fuel |
| 18:2 | 117-3892 | 1 | Sleeve-Thermal |
| 18:3 | 2412-98 | 2 | Clamp-Hose |
| 19 | 116-4295 | 2 | Screw-HH |
| 20 | 1-303435 | 2 | Washer-Spring |
| 21 | 105-1853 | 1 | Clamp-Hose |
| 22 | 115-2752 | 1 | Throttle Control ASM |
| 22:1 | 112-2334 | 1 | Lever-Throttle |
| 22:2 | 115-3868 | 1 | Cable-Throttle |
| 23 | 1-807513 | 2 | Bolt-CARR |
| 24 | 3296-2 | 2 | Nut-Lock, NI |
| 25 | 1-603175 | 1 | Knob-Ball |

● Torque to 24-26 ft-lb
▲ Not serviced separately
❑ Use Pro-Lock, Nut Type (P/N 1-840022, .5ml tube) on threads.
■ Torque to 17-23 ft-lb
◆ Obtain parts from www.kohlerplus.com

# Deck Assembly

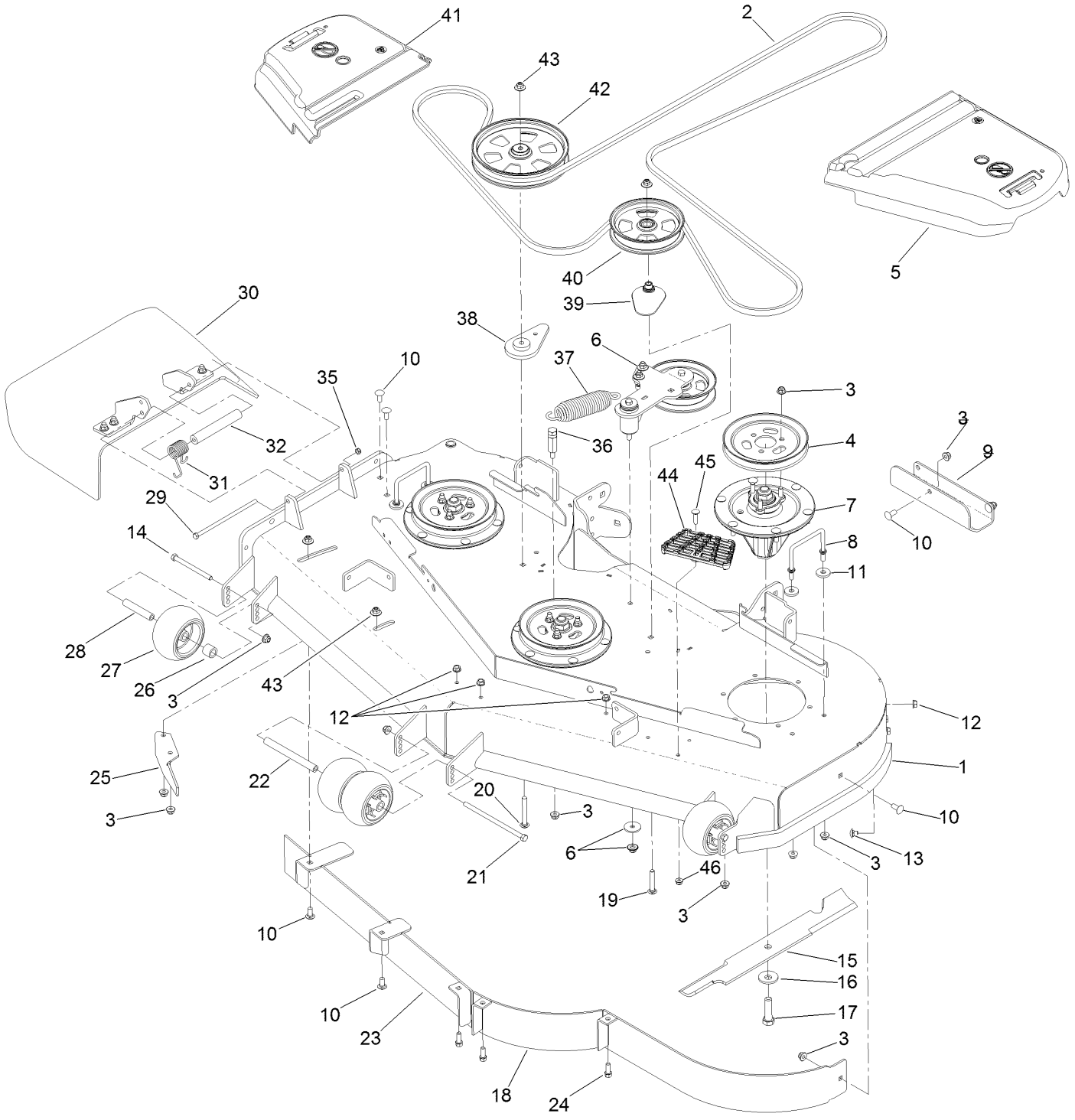

# Deck Assembly (continued)

| Ref. | Part Number | Qty. | Description |
|---|---|---|---|
| 1 | 136-8639 | 1 | Deck Decal ASM |
| 2 | 114-5858 | 1 | Belt-V |
| 3 | 104-8301 | 42 | Nut-HF, NI |
| 4 | 105-7734 | 3 | Pulley |
| 5 | 109-6938 | 1 | Cover-Belt, LH |
| 6 | | 1 | Idler Arm ASM ● |
| 7 | 127-0560 | 3 | Spindle ASM |
| 8 | 109-6982 | 2 | Wireform-Cover |
| 9 | 121-8031-01 | 1 | Plate-Skid |
| 10 | 3231-27 | 9 | Screw-CARR |
| 11 | 1-373034 | 4 | Washer |
| 12 | 3290-357 | 6 | Nut-HHF, Whiz |
| 13 | 108-5387 | 3 | Screw-CARR |
| 14 | 323-23 | 2 | Screw-HH |
| 15 | 105-7718-03 | 3 | Blade-Hi Flow |
| 16 | 103-0865 | 3 | Washer-Blade Bolt, Heavy |
| 17 | 51-4060 | 3 | Screw-Blade |
| 18 | 114-5842-01 | 1 | Baffle |
| 19 | 3231-40 | 1 | Bolt-CARR, Short Neck |
| 20 | 3231-42 | 1 | Screw-CARR |
| 21 | 108-5388 | 1 | Screw-HH |
| 22 | 98-5967 | 1 | Spacer-Wheel |
| 23 | 115-7465-01 | 1 | Baffle |
| 24 | 92-1624 | 3 | Screw-HWH |
| 25 | 106-3216-01 | 1 | Baffle-Discharge |
| 26 | 98-7913 | 2 | Tube-Spacer |
| 27 | 1-603299 | 4 | Roller-Scalp, Anti |
| 28 | 98-7912 | 2 | Tube-Spanner |
| 29 | 322-50 | 1 | Screw-HH |
| 30 | 108-2792 | 1 | Rubber Deflector ASM |
| 31 | 108-4052 | 1 | Spring-Torsion |
| 32 | 105-4622 | 1 | Spacer |
| 35 | 3296-47 | 1 | Nut-Lock, NI |
| 36 | 114-5867 | 1 | Anchor-Spring, Tall |
| 37 | 116-6317 | 1 | Spring-Extension |
| 38 | 109-9416 | 1 | Spacer-Idler |
| 39 | 109-2872 | 1 | Spacer-Pulley |
| 40 | 136-5404 | 1 | Pulley-Idler, Flat |
| 41 | 116-0094 | 1 | Cover-Belt, RH |
| 42 | 132-4734 | 1 | Pulley-Idler,Flat |
| 43 | 109-6658 | 4 | Nut-Flange, NI |
| 44 | 126-4781-03 | 1 | Step-Deck |
| 45 | 3230-3 | 1 | Screw-CARR |
| 46 | 104-8300 | 1 | Nut-HF, NI |

● Not serviced separately

# Deck Decal Assembly No. 136-8639

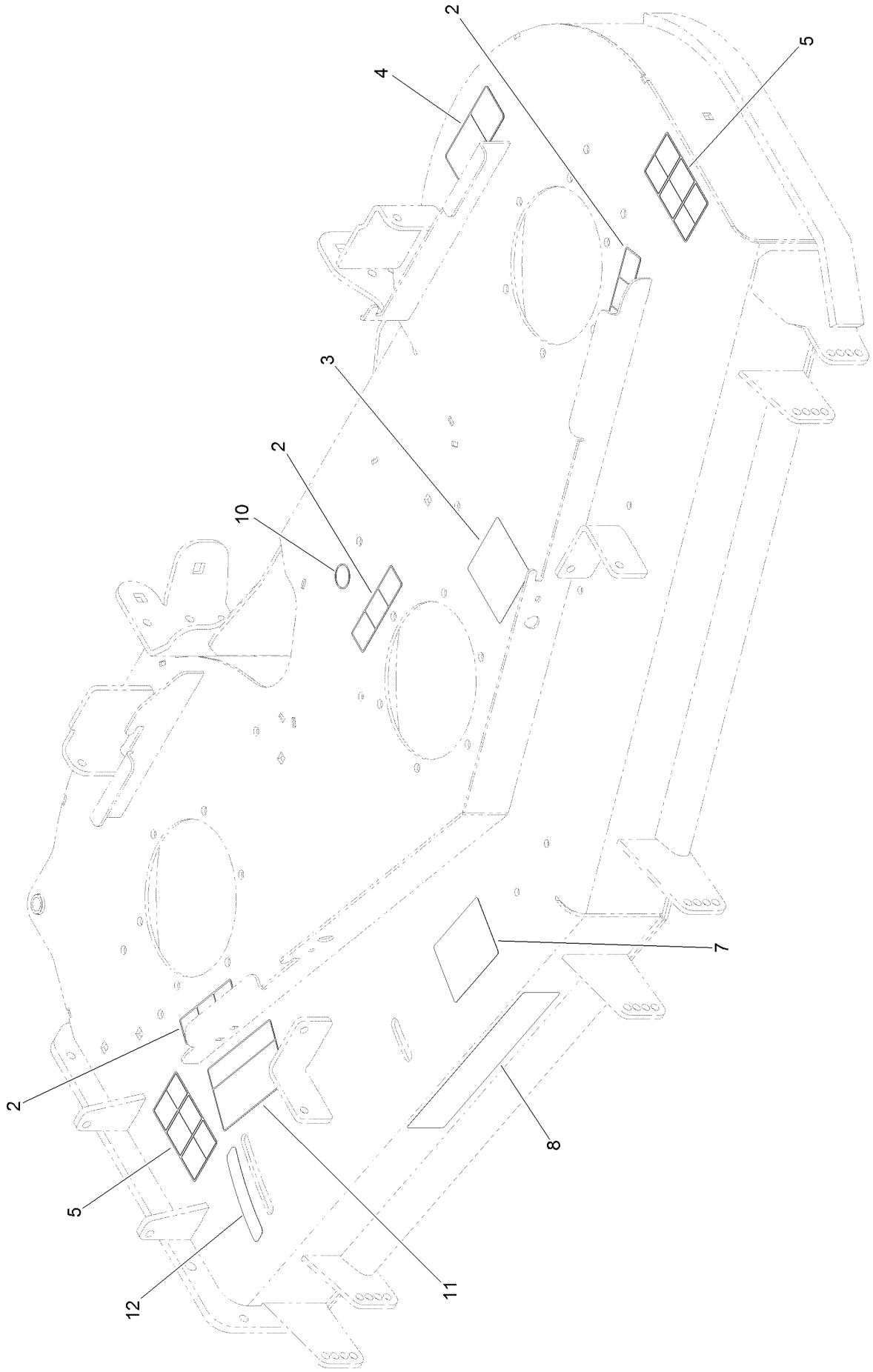

# Deck Decal Assembly No. 136-8639 (continued)

| Ref. | Part Number | Qty. | Description |
|---|---|---|---|
| 2 | 112-9028 | 3 | Decal-Cover, Missing |
| 3 | 136-5508 | 1 | Decal-Routing, Deck Belt |
| 4 | 93-7818 | 1 | Decal-Torque, Blade Bolt |
| 5 | 117-3848 | 2 | Decal-Danger |
| 7 | 127-0326 | 1 | Decal-Scalp, Anti |
| 8 | 107-1619 | 1 | Decal |
| 10 | 58-6520 | 1 | Decal-Grease |
| 11 | 110-2068 | 1 | Decal-Adjustment, Baffle |
| 12 | 110-2067 | 1 | Decal-Setting, Baffle |

# Idler Arm Assembly

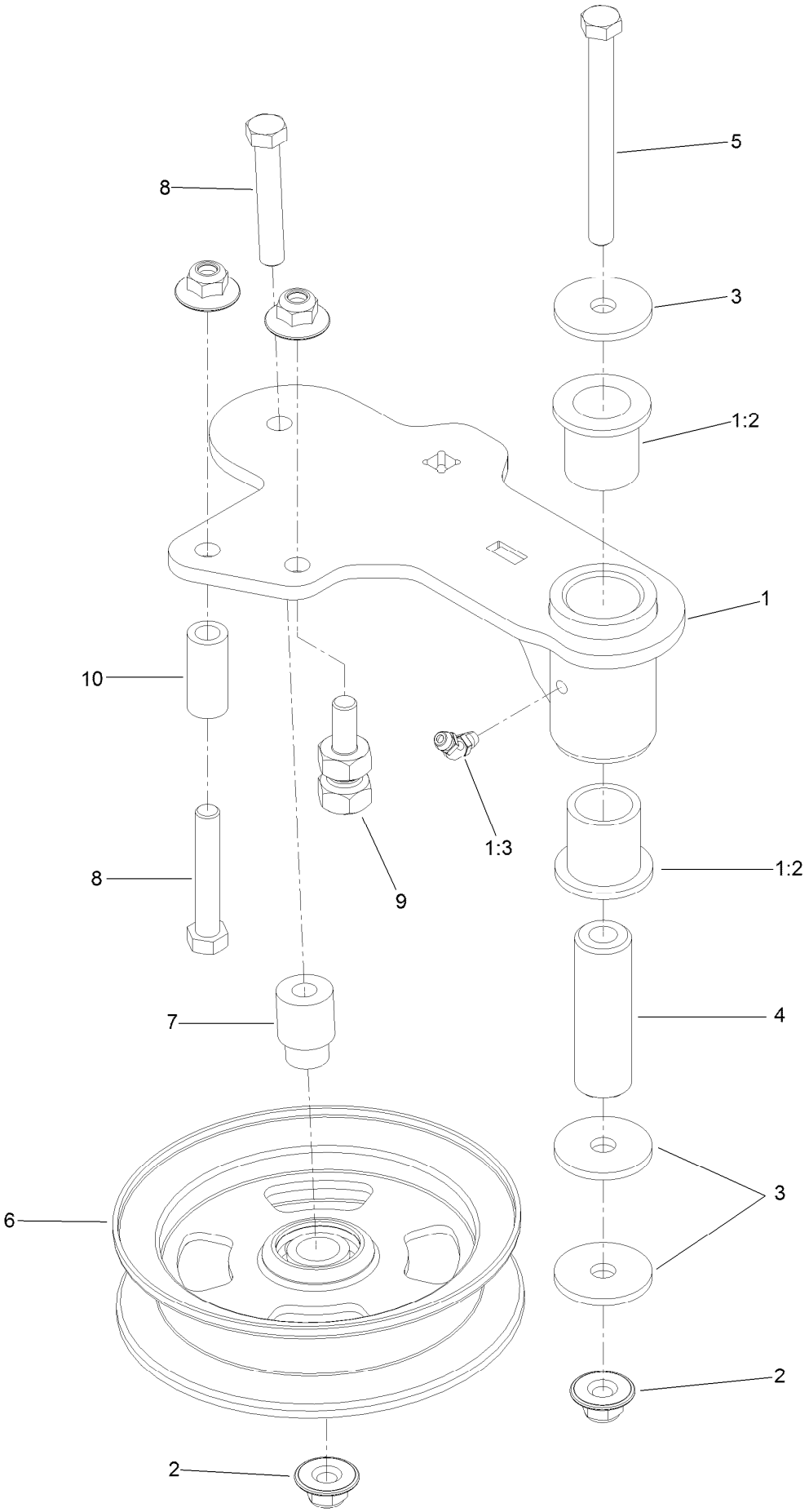

# Idler Arm Assembly (continued)

| Ref. | Part Number | Qty. | Description |
|---|---|---|---|
| 1 | 114-5870 | 1 | Idler Arm ASM |
| 1:2 | 1-303514 | 2 | Bearing-Flanged |
| 1:3 | 1481 | 1 | Fitting-Grease |
| 2 | 109-6658 | 4 | Nut-Flange, NI |
| 3 | 1-213069 | 3 | Washer |
| 4 | 114-5848 | 1 | Spacer-Plain |
| 5 | 98-5961 | 1 | Screw-HH |
| 6 | 132-9425 | 1 | Pulley-Idler, Flat |
| 7 | 112-4212 | 1 | Mount-Pulley |
| 8 | 323-11 | 2 | Screw-HH |
| 9 | 132-4729 | 1 | Anchor-Spring, Short |
| 10 | 104-0151 | 1 | Spacer |

# Spindle Assembly No. 127-0560

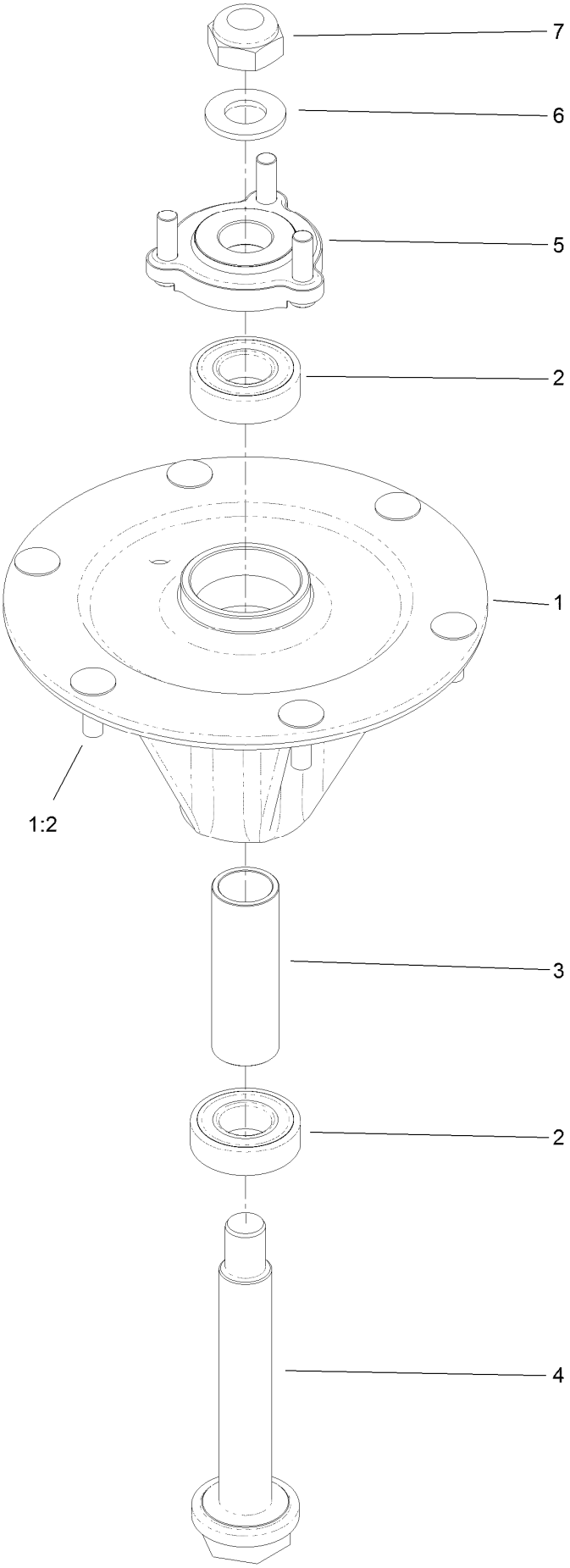

# Spindle Assembly No. 127-0560 (continued)

| Ref. | Part Number | Qty. | Description |
|---|---|---|---|
| 1 | | 1 | Spindle Housing ASM W/Studs ● |
| 1:2 | 114-8195 | 6 | Bolt-Ribbed Neck |
| 2 | 116-0720 | 2 | Bearing-Ball |
| 3 | 127-0554 | 1 | Spacer-Bearing |
| 4 | 127-0556 | 1 | Shaft-Spindle, Ball Bearing |
| 5 | 127-0557 | 1 | Hub-Spindle (W/Studs) |
| 6 | 92-5836 | 1 | Washer |
| 7 | 3296-67 | 1 | Nut-Lock, NI |

● Not serviced separately

# Rubber Deflector Assembly No. 108-2792

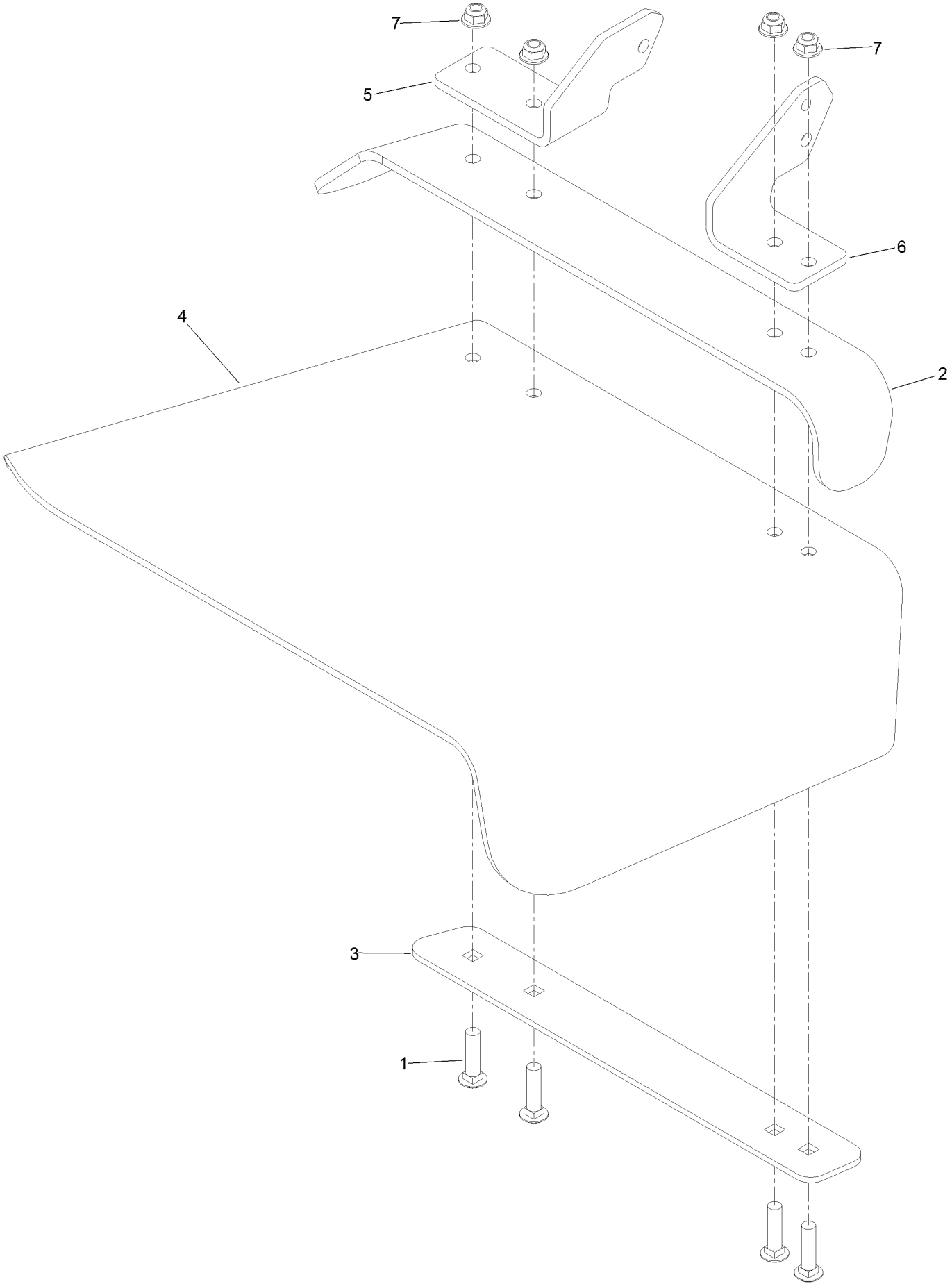

# Rubber Deflector Assembly No. 108-2792 (continued)

| Ref. | Part Number | Qty. | Description |
|---|---|---|---|
| 1 | 3231-4 | 4 | Screw-CARR |
| 2 | 106-3246-01 | 1 | Deflector |
| 3 | 106-3248-03 | 1 | Strap-Discharge |
| 4 | 108-5029 | 1 | Deflector-Rubber |
| 5 | 108-4059-01 | 1 | Plate-Hinge, Rear |
| 6 | 106-3253-01 | 1 | Plate-Hinge, Front |
| 7 | 104-8301 | 4 | Nut-HF, NI |

# Frame Decal Assembly

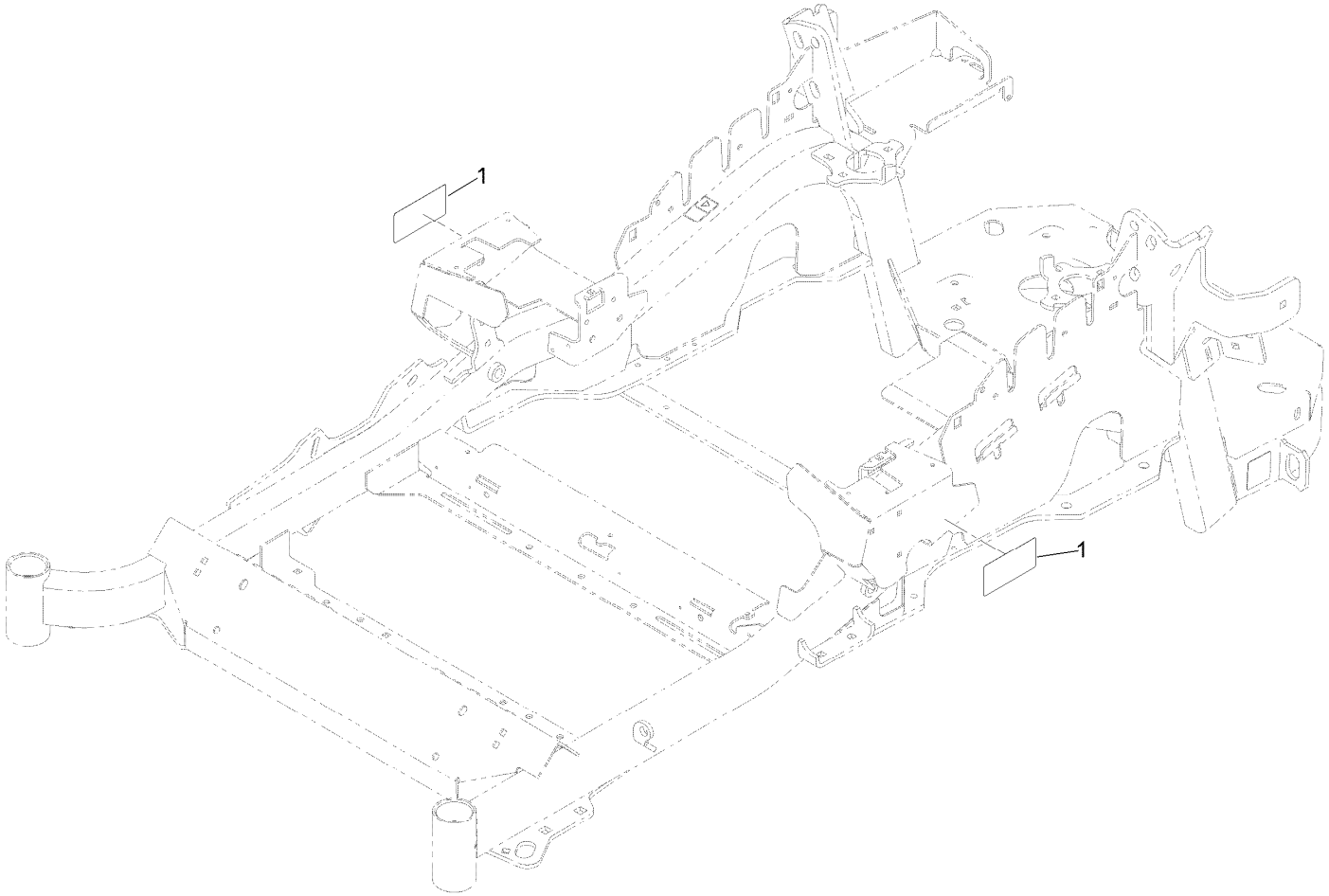

# Frame Decal Assembly (continued)

| Ref. | Part Number | Qty. | Description |
|---|---|---|---|
| 1 | 120-5894 | 2 | Decal |

# Attachments and Accessories

## For 74930 Z Master Professional 5000 Series Riding Mower with 60in TURBO FORCE Side Discharge Mower

| Product Name | Model/Part |
|---|---|
| Blower and Drive Kit | 78553 |
| E-Z Vac Triple Bagging System | 78563 |
| E-Z Vac DFS Collection System | 78567 |
| Deluxe Suspension Seat Kit | 117-6174 |
| Deluxe Seat Kit | 121-7595 |
| Recycler Kit | 115-7468 |
| Operator Controlled Discharge Chute Kit | 117-3600 |
| Bimini Folding Shade Assembly | 115-4510 |
| Z Stand Kit | 121-4811 |
| Seat Cover W/arm rest | 117-0095 |
| Power Deck Lift Kit | 132-5986 |
| Light Kit | 116-1154 |
| Hitch Kit | 109-9487 |
| Trash Holder Kit | TC26 |
| Blade-Hi Flow, 20.5in | 105-7718-03 |
| Blade-Mid Flow, 20.5in | 105-7715-03 |
| Blade-Lo Flow, 20.5in | 105-7716-03 |
| Blade-Atomic, 20.5in | 105-8777-03 |
| Blade-Recycler, 20.5in | 105-7777-03 |
| 6 Pack Blade, 20.5in Hi-Flow | 108-1114 |
| 6 Pack Blade, 20.5in Mid-Flow | 108-1123 |
| 6 Pack-Blade, 20.5in Lo Flow | 108-1128 |
| 6 Pack-Blade, 20.5in Atomic | 108-1115 |
| 6 Pack-Blade, 20.5in Recycler | 110-0405 |
| Roller Striper Kit | 115-7470 |
| Filter Minder Gauge | 99-4664 |
| Spark Arrestor Screen | 75-6880 |
| Anti-Scalp Kit (Trim Side) | 108-4140 |
| Turbo Baffle Kit | 107-1634 |
| Jack Kit | 127-6666 |
| Seat Tilt Frame And Iso Mount Kit | 121-7596 |
| MVP Belt and Blade Kit | 127-1639 |
| Jack Mount Kit | 127-6665 |
| Trimmer Mount | 137-9769 |
| Bucket Mount Kit | 137-9216 |
| Toro Deluxe Rider Cover | 490-7319 |
| Hypr-Oil 500 (quart) | 114-4713 |
| Hypr-Oil 500 (gallon) | 114-4714 |
| Hypr-Oil 500-5 (5 gallon) | 114-4715 |

**Notes:**

**Notes:**

**Notes:**

TORO®

Count on it.