Form No. 3424-655 Rev A

TORO®

Count on it.

Parts Catalog

Z Master® Professional 5000 Series Riding Mower

with 60in TURBO FORCE® Side Discharge Mower

Model No. 74930—Serial No. 403319739 and Up

Register at www.Toro.com.
Original Instructions (EN)

3424-655 A

Ordering Replacement Parts

To order replacement parts, please supply the part number, the quantity, and the description of each part desired.

Understanding Reference Numbers

Each identified part in an illustration has a reference number. The reference number for a part also appears in the parts list, along with other information about the part.

This catalog uses two special reference number formats, one to indicate parts in a service assembly and another to indicate the quantity of a given part in an illustration.

Service Assembly Reference Numbers

Parts in service assemblies have reference numbers in the form a:b. The a represents the reference number of the entire service assembly and the b represents a sequential number unique to each part within the service assembly.

For example, a wheel assembly might be identified by reference number 6, the tire by 6:1, the valve by 6:2, and the wheel by 6:3. When you order the assembly identified by reference number 6, you receive all parts identified by reference numbers 6:1,6:2, and 6:3. However, you may also order any part individually. Reference numbers of this type appear in illustration and in parts lists.

Reference Numbers Indicating Quantity

In an illustration, if a reference number indicates more than one part, the reference number has the form nX y. The n represents the quantity of the part, the X is the multiplication symbol, and the y represents the reference number.

For example, in an illustration, the reference number 2X 37 means that two of the parts identified by reference number 37 are indicated.

Contents

Frame Assembly 4
Roll-Over Protection System Assembly No. 116-0231 6
Caster Fork and Wheel Assembly 8
Hydraulic Drive Assembly 10
Pump Idler Assembly No. 116-1255 12
LH Hydro Assembly No. 126-1323 14
RH Hydro Assembly No. 126-1324 16
Rear Wheel Assembly 18
Park Brake Assembly 20
Fuel System Assembly 22
Fuel Tank Assembly No. 135-0643 24
Seat Mounting Assembly 26
Seat Assembly No. 125-3107 28
Motion Control Assembly 30
Control Console Assembly 32
Electrical Assembly 34
Wire Harness Assembly No. 135-5753 36
Deck Lift Assembly 38
Height-of-Cut Assembly No. 109-7438 40
Engine, Clutch and Muffler Assembly 42
Deck Assembly 44
Deck Decal Assembly No. 136-8639 46
Idler Arm Assembly 48
Spindle Assembly No. 127-0560 50
Rubber Deflector Assembly No. 108-2792 52
Frame Decal Assembly 54
Attachments and Accessories 56

© 2018—The Toro® Company
8111 Lyndale Avenue South
Bloomington, MN 55420

Contact us at www.Toro.com.
Printed in the USA.
All Rights Reserved

Frame Assembly

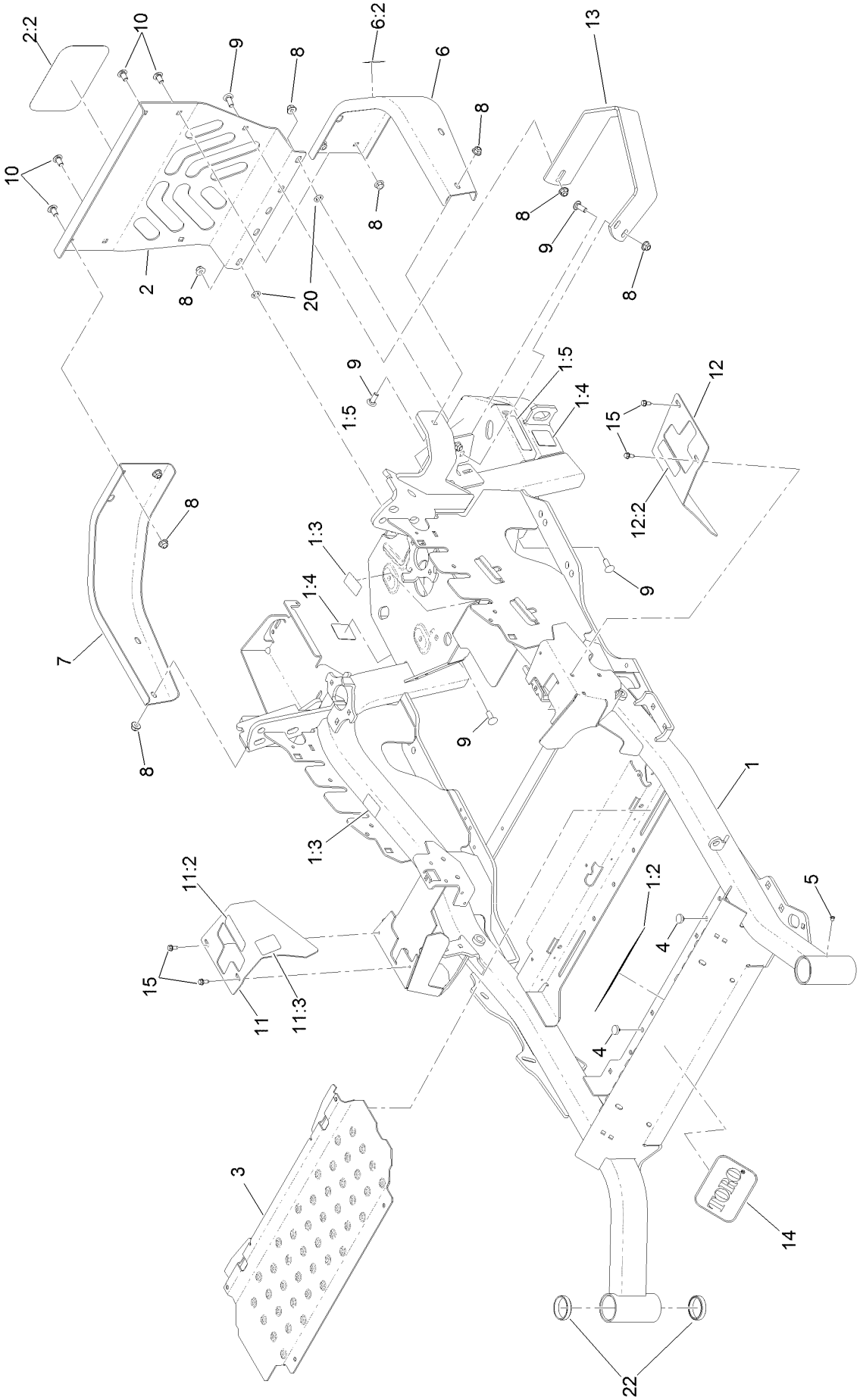

Frame Assembly (continued)

Ref.	Part Number	Qty.	Description
1	116-5902	1	Mainframe ASM
1:2	132-0871	1	Decal-Danger
1:3	106-5517	2	Decal-Warning
1:4	106-2655	2	Decal-Hazard, Pinched Finger
1:5	133-8062	1	Decal-Arrestor, Spark
2	115-7410	1	Rear Guard ASM
2:2	67-7320	1	Decal
3	116-8898-01	1	Floorpan
4	1-513658	2	Bumper
5	1-811010	2	Plug
6	116-0180	1	LH Bumper ASM
6:2	106-5517	1	Decal-Warning
7	116-0057-03	1	Bumper-RH
8	104-8301	11	Nut-HF, NI
9	3231-22	7	Screw-CARR
10	3231-21	4	Screw-CARR
11	116-5899	1	RH Motion Control Cover ASM
11:2	99-8936	1	Decal-Control, Motion
11:3	116-5988	1	Decal-Park Brake, CE
12	116-0580	1	LH Motion Control Cover ASM
12:2	99-8936	1	Decal-Control, Motion
13	126-2067-03	1	Guard-Muffler
14	68-3640	1	Decal
15	32144-10	4	Screw-HWH
20	107-3154	2	Nut-Push
22	1-543508	4	Cup-Bearing

Roll-Over Protection System Assembly No. 116-0231

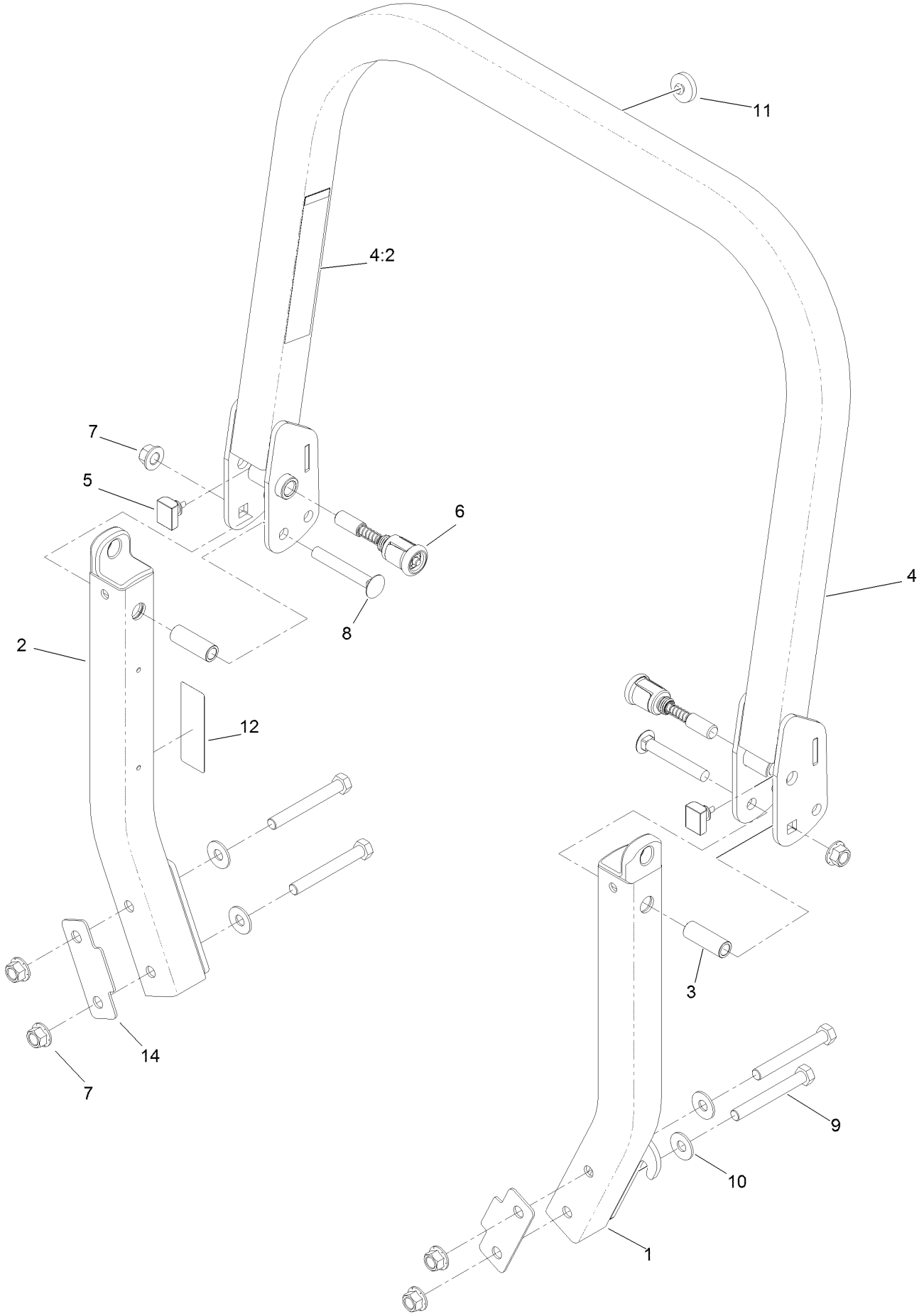

Roll-Over Protection System Assembly No. 116-0231 (continued)

Ref.	Part Number	Qty.	Description
1		1	Leg-ROPS, LH ●
2		1	Leg-ROPS, RH ●
3	109-6653	2	Spacer
4		1	Upper ROPS ASM ●
4:2	107-3069	1	Decal-Warning
5	109-5337	2	Bumper-ROPS
6	116-0104	2	Pin-Spring
7	99-5107	6	Nut-Lock
8	3233-10	2	Screw-CARR
9	325-35	4	Screw-HH
10	109-9505	4	Washer-Spring
11	109-9233	1	Bumper-Push-In, Rubber
12	117-0346	1	Decal-Caution, Fuel Vent
14	116-0960	2	Spacer

● Not serviced separately

Caster Fork and Wheel Assembly

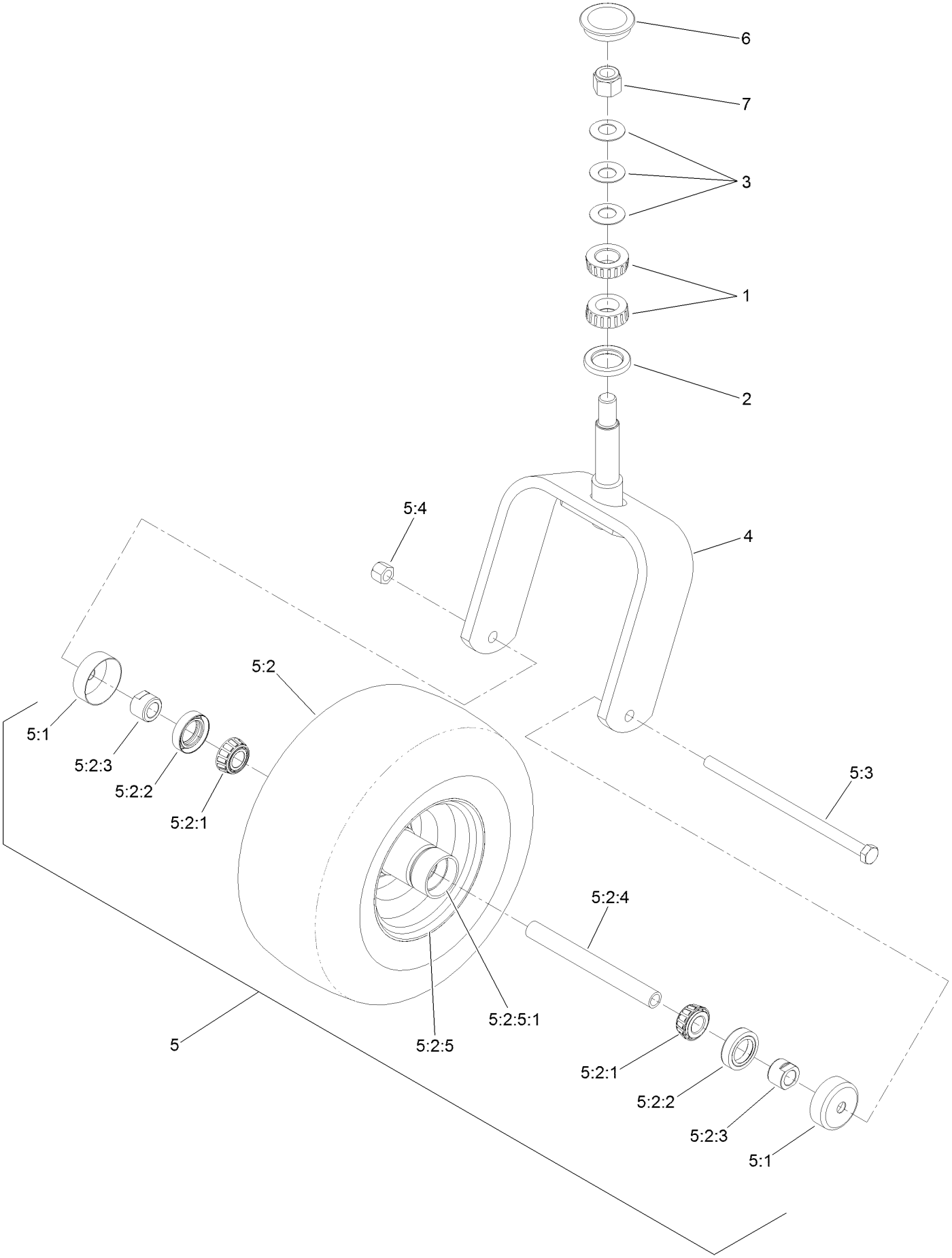

Caster Fork and Wheel Assembly (continued)

Ref.	Part Number	Qty.	Description
1	1-543509	2	Bearing-Roller, Tapered
2	116-5647	1	Seal-Grease
3	1-633508	3	Washer-Bellville
4	116-6707-01	1	Caster
5	127-9528	1	Wheel And Axle ASM
5:1	103-2768	2	Guard-Seal
5:2		1	Wheel And Bearing ASM ●
5:2:1	1-633585	2	Bearing-Cone, Taper
5:2:2	103-0063	2	Seal-Caster
5:2:3	103-3051	1	Spacer-Nut ■
5:2:4	126-5361	1	Axle Caster ASM
5:2:5		1	Wheel And Tire ASM ●
5:2:5:1	1-633584	2	Bearing-Cup
5:3	325-39	1	Screw-HH
5:4	3296-23	1	Nut-Lock, NI
6	103-4882	1	Cap-Grease
7	3296-51	1	Nut-Lock, NI

● Not serviced separately
■ Use Pro-Lock, Nut Type (P/N 1-840022, .5ml tube) on threads.

Hydraulic Drive Assembly

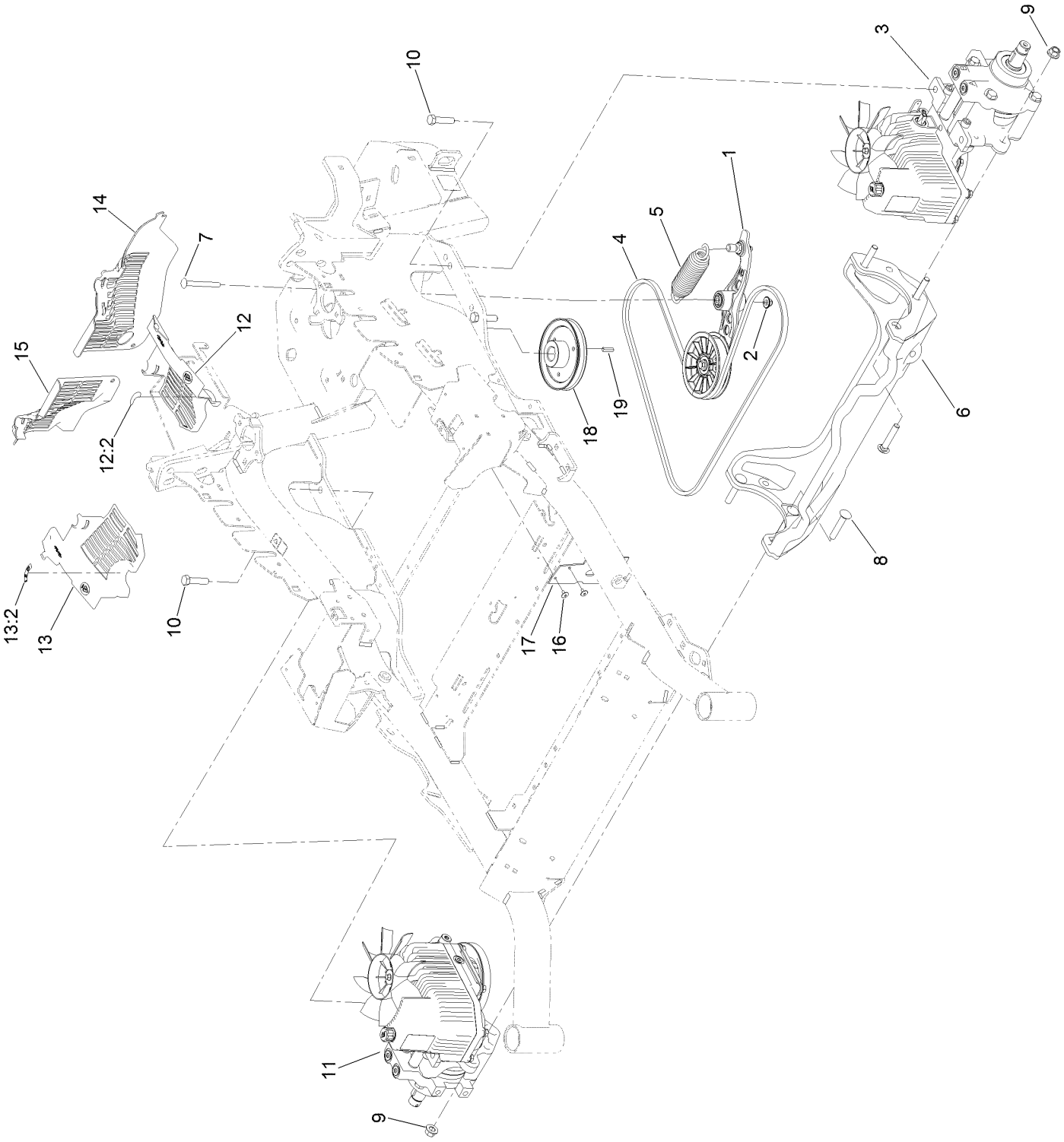

Hydraulic Drive Assembly (continued)

Ref.	Part Number	Qty.	Description
1	116-1255	1	Pump Idler ASM
2	109-6658	1	Nut-Flange, NI
3	126-1323	1	LH Hydro ASM (12Cc W/ Shock)
4	109-3388	1	Belt
5	116-6317	1	Spring-Extension
6	116-7558	1	Cradle-Hydro
7	116-1502	1	Bolt-Shoulder, Carriage
8	126-0095	6	Screw-CARR
9	99-5107	6	Nut-Lock
10	325-8	4	Screw-HH
11	126-1324	1	RH Hydro ASM (12Cc W/ Shock)
12	116-0170	1	LH Hydro Guard ASM
12:2	116-8726	1	Decal-Oil, Hydro
13	116-0171	1	RH Hydro Guard ASM
13:2	116-8726	1	Decal-Oil, Hydro
14	109-9057	1	Guard-Hydro, Rear (LH)
15	109-9058	1	Guard-Hydro, Rear (RH)
16	1-803035	2	Rivet-Pop
17	116-2362	1	Deflector-Air Flow
18	109-9905	1	Sheave
19	1-807259	1	Key
99	114-4713	1	Hypr-Oil 500 (Quart) ●
99	114-4714	1	Hypr-Oil 500 (Gallon) ●
99	114-4715	1	Hypr-Oil 500-5 (5 Gallon) ●
99	117-0390	1	Filter-Hydro ●

● Not illustrated

Pump Idler Assembly No. 116-1255

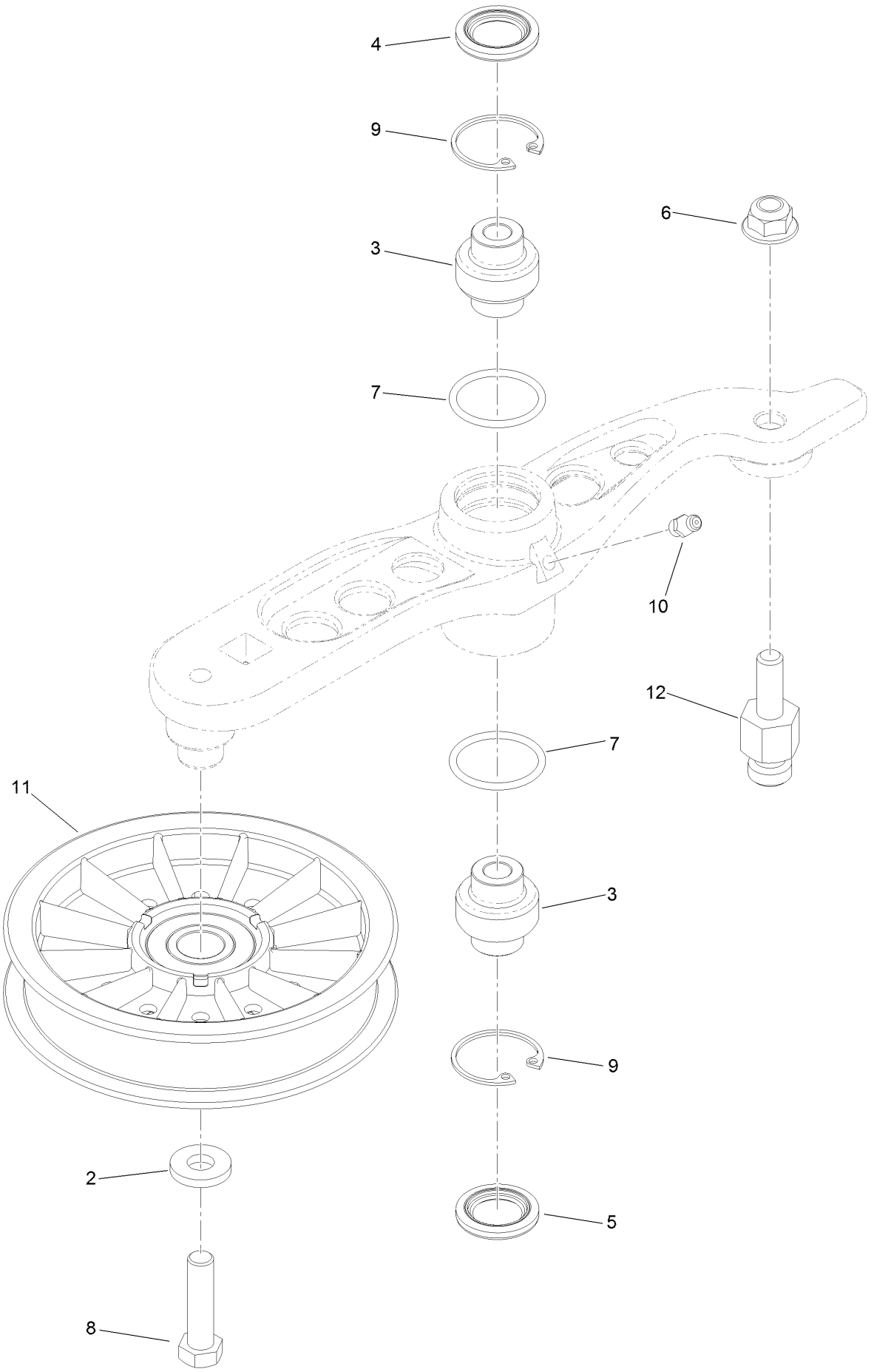

Pump Idler Assembly No. 116-1255 (continued)

Ref.	Part Number	Qty.	Description
2	43-0940	1	Spacer
3	103-3504	2	Bearing-Spherical
4	103-3505	1	Seal-Lip, Double
5	103-3506	1	Seal-Lip, Single
6	109-6658	1	Nut-Flange, NI
7	106-7159	2	O-Ring
8	323-8	1	Screw-HH
9	32120-10	2	Ring-Snap
10	302-19	1	Fitting-Grease
11	109-8076	1	Pulley-Idler
12	132-4724	1	Pin-Anchor, Spring

LH Hydro Assembly No. 126-1323

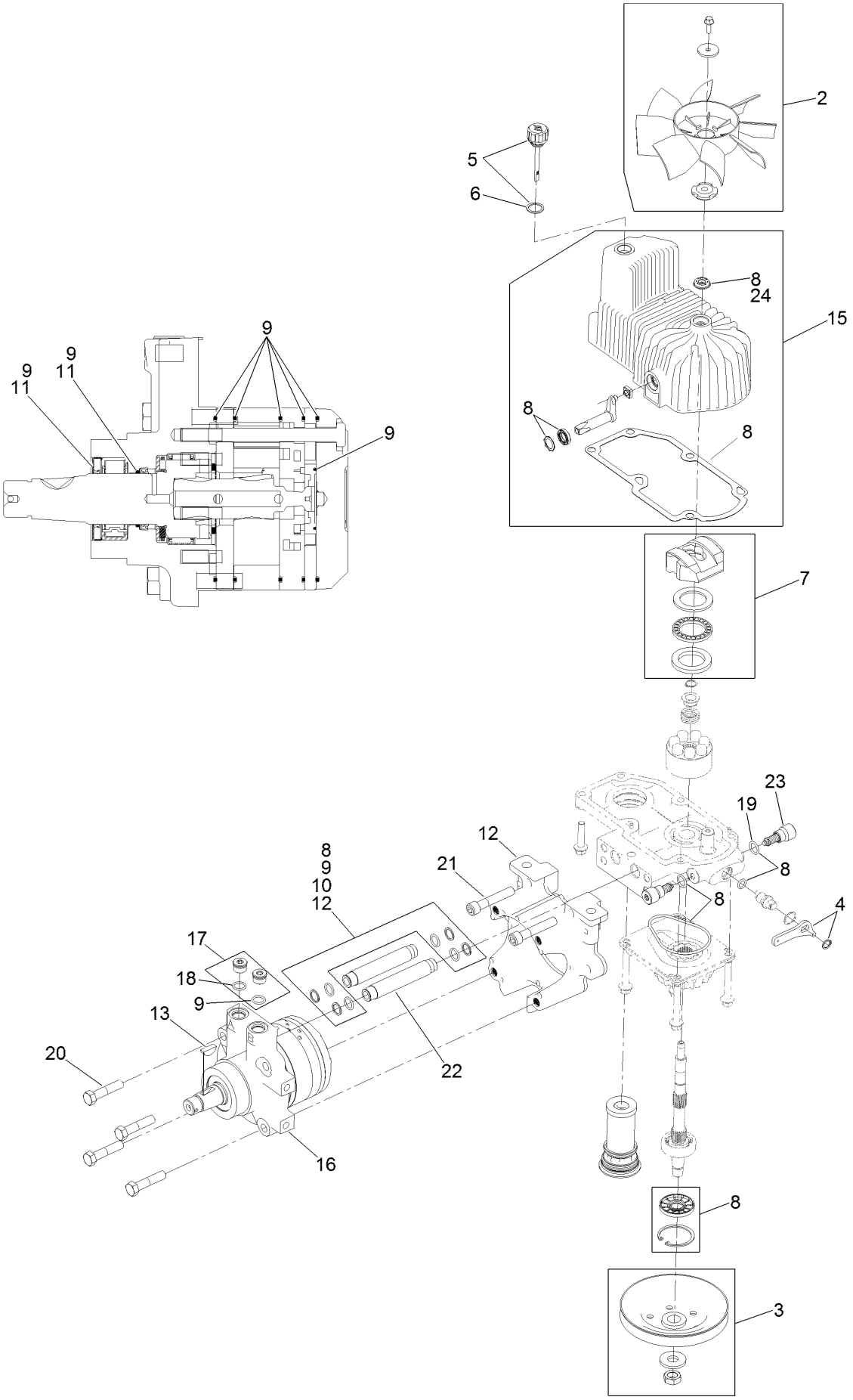

LH Hydro Assembly No. 126-1323 (continued)

Ref.	Part Number	Qty.	Description
2	116-0233	1	Fan Kit
3	116-0234	1	Pulley Kit
4	116-0235	1	Handle-Bypass Valve, Hydro
5	116-0236	1	Dipstick-Hydro W/Gasket
6	116-0237	1	Gasket-Dipstick, Hydro
7	116-1367	1	Swash Block Kit
8	116-1368	1	Pump Seal Kit
9	116-1369	1	Motor Seal Kit
10	116-1370	1	Tube Seal Kit
11	116-1371	1	Output Shaft Seal Kit
12	116-5469	1	Nose Cup-Uht
13	3257-42	1	Key-Woodruff
15	116-3287	1	Housing-LH
16	116-8915	1	Motor-Hydraulic LH 240Cc
17	116-7901	1	Magnetic Plugs Service Kit
18	76-1900	2	O-Ring
19	116-8662	2	O-Ring-Check Valve
20	116-8974	4	Screw HH
21	116-8975	2	Screw-HSH
22	116-9922	2	Hydraulic Tube Kit
23	126-7466	2	Shock Valve, 12Cc Hydro
24	126-7711	1	Seal-Fan Drive
99	116-1373	1	Flow Test Kit ●
99	116-4245	1	Puller-Pulley ●

● Not illustrated

RH Hydro Assembly No. 126-1324

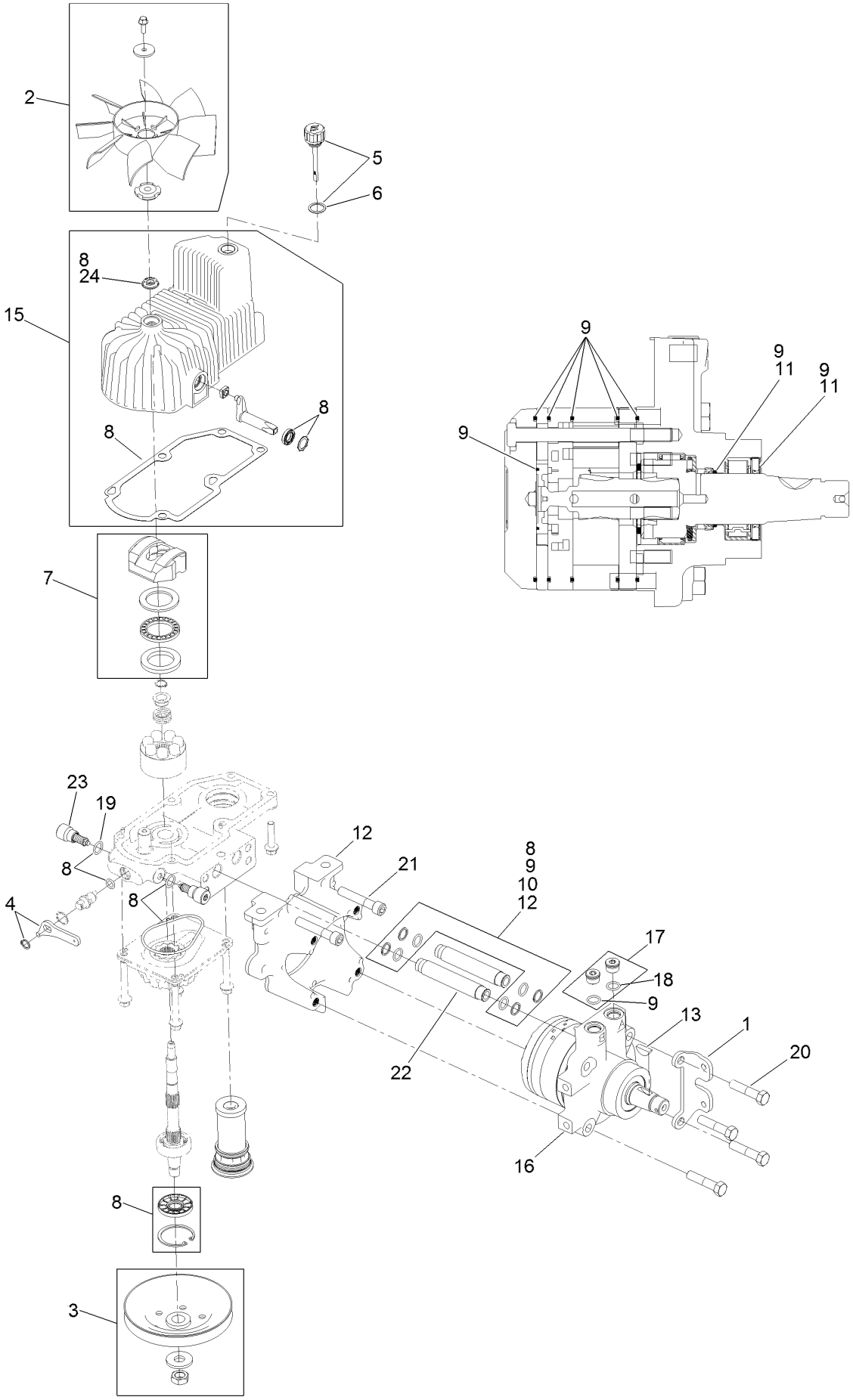

RH Hydro Assembly No. 126-1324 (continued)

Ref.	Part Number	Qty.	Description
1	116-9063	1	Mount-Shoe, Horse
2	116-0233	1	Fan Kit
3	116-0234	1	Pulley Kit
4	116-0235	1	Handle-Bypass Valve, Hydro
5	116-0236	1	Dipstick-Hydro W/Gasket
6	116-0237	1	Gasket-Dipstick, Hydro
7	116-1367	1	Swash Block Kit
8	116-1368	1	Pump Seal Kit
9	116-1369	1	Motor Seal Kit
10	116-1370	1	Tube Seal Kit
11	116-1371	1	Output Shaft Seal Kit
12	116-5469	1	Nose Cup-Uht
13	3257-42	1	Key-Woodruff
15	116-3288	1	Housing-RH
16	116-8916	1	Motor-Hydraulic RH 240Cc
17	116-7901	1	Magnetic Plugs Service Kit
18	76-1900	2	O-Ring
19	116-8662	2	O-Ring-Check Valve
20	116-8974	4	Screw HH
21	116-8975	2	Screw-HSH
22	116-9922	2	Hydraulic Tube Kit
23	126-7466	2	Shock Valve, 12Cc Hydro
24	126-7711	1	Seal-Fan Drive
99	116-1373	1	Flow Test Kit ●
99	116-4245	1	Puller-Pulley ●

● Not illustrated

Rear Wheel Assembly

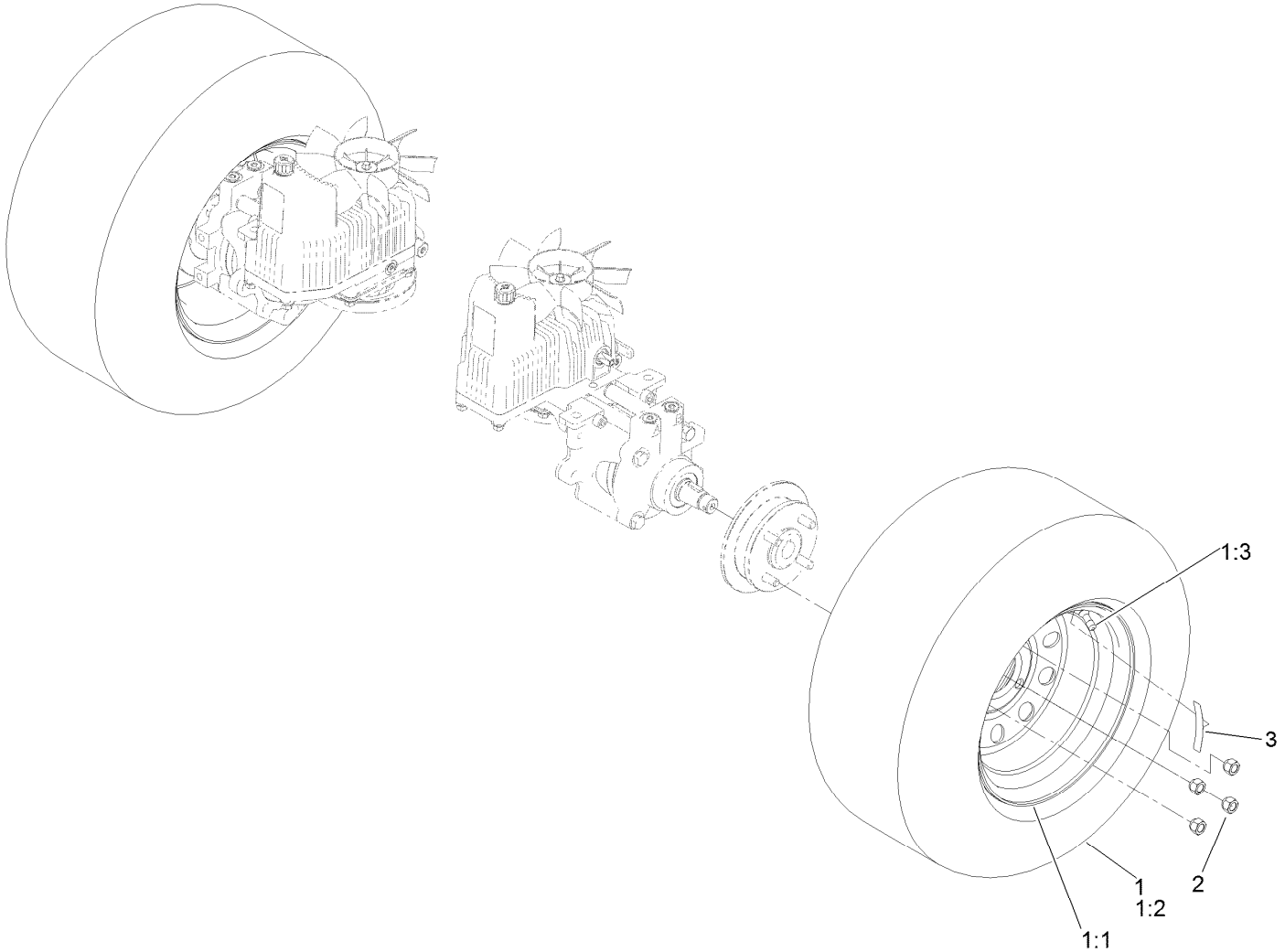

Rear Wheel Assembly (continued)

Ref.	Part Number	Qty.	Description
1	127-9520	2	Wheel And Tire ASM
1:1	127-9517	1	Wheel
1:2	1-633993	1	Tire
1:3	232-27	1	Stem-Valve

Ref.	Part Number	Qty.	Description
2	242-50	8	Nut-Lug
3	126-2055	2	Decal-Torque, Wheel Hub Lug

Park Brake Assembly

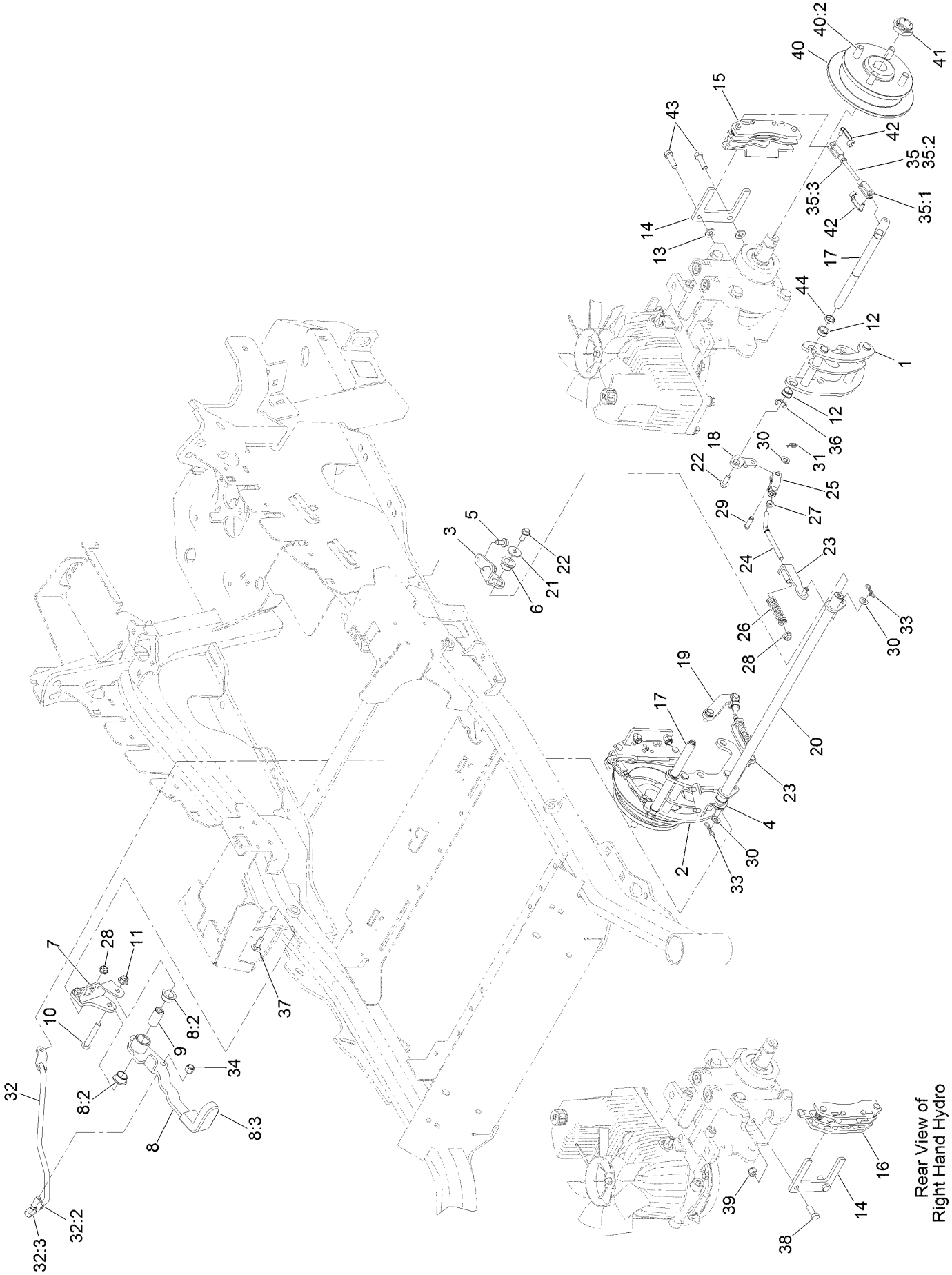

Park Brake Assembly (continued)

Ref.	Part Number	Qty.	Description
1	126-4248	1	Mount-Bellcrank, LH
2	126-4249	1	Mount-Bellcrank, RH
3	116-9681	1	Mount-Pivot, LH
4	116-9682	1	Mount-Pivot, RH
5	32144-70	4	Screw-HWHTF
6	109-8054	2	Bushing-Flange
7	116-9096-01	1	Bracket-Mount
8	132-9406	1	Brake Lever ASM W/ Grip
8:2	109-8054	2	Bushing-Flange
8:3	132-4749	1	Grip-Lever
9	116-9117	1	Handle-Pivot, Brake
10	323-11	1	Screw-HH
11	104-8301	1	Nut-HF, NI
12	126-6199	4	Bushing
13	3256-24	2	Washer-Flat
14	109-0958	2	Plate-Mount, Brake
15	109-2889	1	Caliper-Brake
16	116-9103	1	Caliper-Brake, RH
17	126-4251	2	Bellcrank
18	126-3715	1	Arm-Inner, LH
19	126-3716	1	Arm-Inner, RH
20	116-9080	1	Shaft-Cross
21	115-7109	2	Washer-Flat
22	98-9940	4	Screw-HHF
23	116-9609	2	Bracket-L
24	116-9086	2	Linkage-Mid
25	126-3693	2	Yoke-Offset
26	116-9085	2	Spring-Compression
27	3220-2	2	Nut-Jam
28	104-8300	4	Nut-HF, NI
29	1-808280	2	Pin-Clevis
30	3256-23	4	Washer-Plain
31	116-6639	2	Pin-Cotter, Locking
32	116-9102	1	Front Linkage ASM
32:2	94-7572	1	End-Tie Rod, RH
32:3	3220-3	1	Nut-HJ
33	119-1415	2	Pin-Cotter, Locking
34	3296-6	1	Nut-Lock
35	126-7587	2	Rear Linkage ASM
35:1	126-7588	2	Yoke
35:2	116-9069	1	Linkage, Rear
35:3	3220-1	1	Nut-Jam
36	32120-19	2	E-Ring
37	3230-2	2	Bolt-CARR
38	323-6	2	Screw-HH
39	3296-39	2	Nut-Lock, NI
40	116-1746	2	Wheel Hub ASM
40:2	116-1696	4	Stud-Wheel
41	116-1399	2	Locknut
42	126-6395	4	Pin-Clevis, Spring
43	92-5727	2	Screw-Lock, Patch
44	126-6200	2	Spacer

Fuel System Assembly

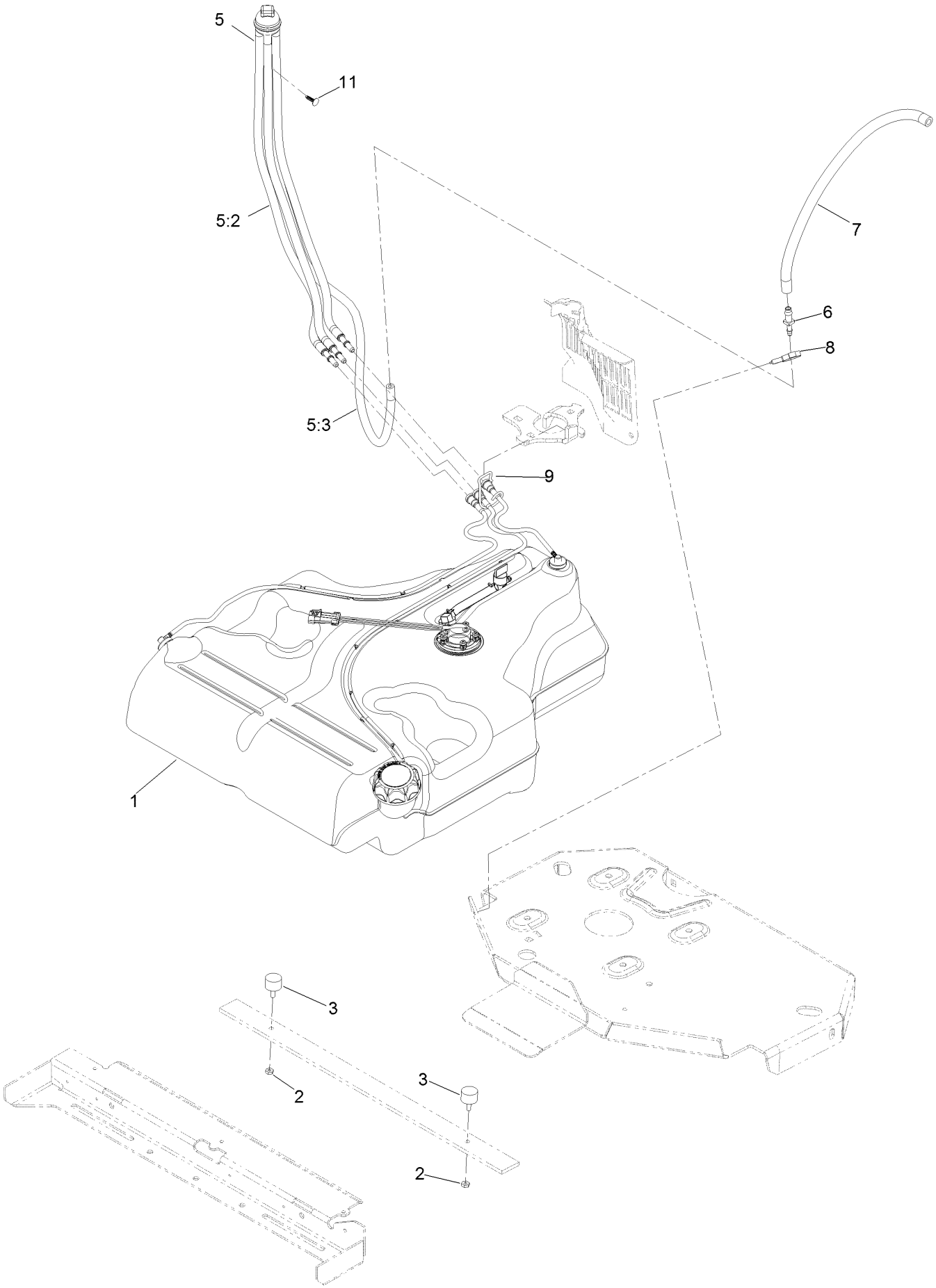

Fuel System Assembly (continued)

Ref.	Part Number	Qty.	Description
1	135-0643	1	Fuel Tank ASM
2	3218-1	2	Nut-Jam
3	1-523420	2	Bumper
5	127-0583	1	Fuel Manifold Vent ASM
5:2	109-0302	3	Hose-Fuel
5:3	108-5376	1	Hose-Fuel
6	116-5072	1	Fitting-Straight
7	116-5087	1	Hose-Fuel
8	105-1853	1	Clamp-Hose
9	116-6005	1	Retainer-Line, Vapor
11	125-8067	1	Plug-Plastic

Fuel Tank Assembly No. 135-0643

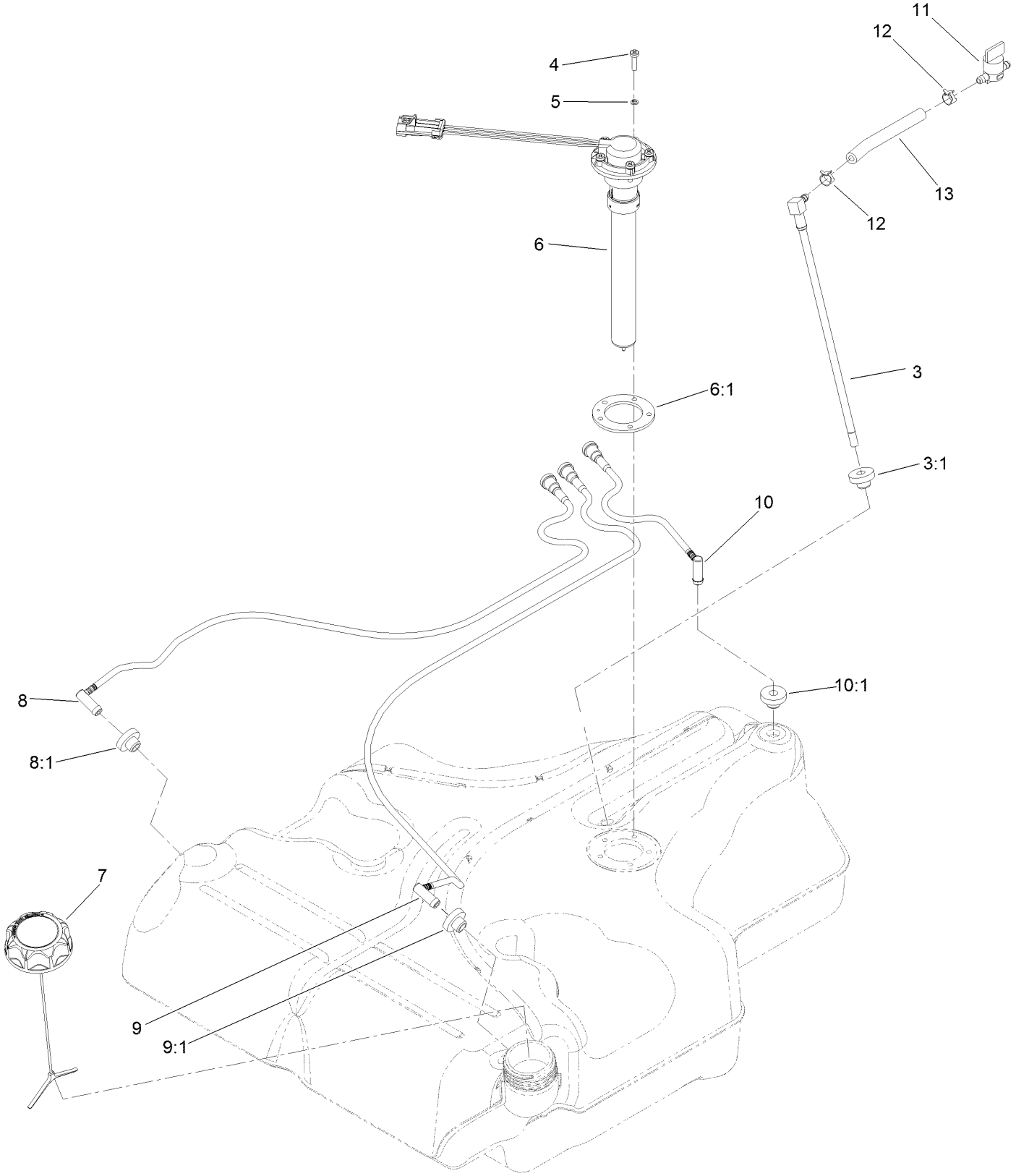

Fuel Tank Assembly No. 135-0643 (continued)

Ref.	Part Number	Qty.	Description
3	116-2459	1	Fuel Line Kit (With Grommet)
3:1	46-6560	1	Bushing
4	3290-500	5	Screw-PPH
5	3253-17	5	Washer-Lock
6	126-3913	1	Float-Sender, Fuel
6:1	126-3950	1	Gasket-Sender
7	126-1789	1	Cap-Fuel, Ratcheting
8	116-2460	1	RH Vent Line Kit (With Grommet)
8:1	46-6560	1	Bushing
9	116-2461	1	LH Vent Line Kit (With Grommet)
9:1	46-6560	1	Bushing
10	116-2462	1	Rear Vent Line Kit (With Grommet)
10:1	46-6560	1	Bushing
11	1-603770	1	Valve-Fuel
12	2412-98	2	Clamp-Hose
13	109-0650	1	Hose-Fuel

Seat Mounting Assembly

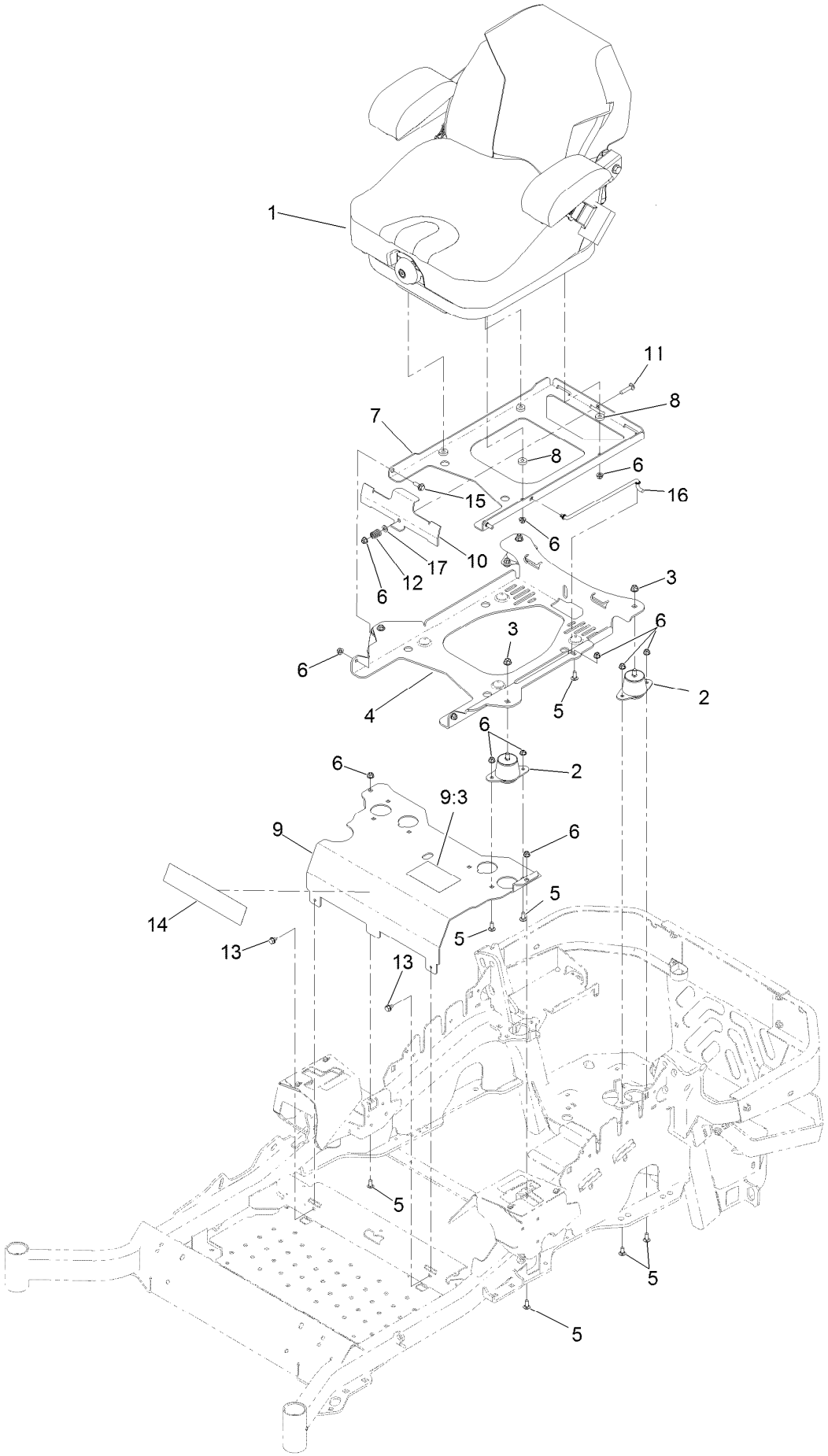

Seat Mounting Assembly (continued)

Ref.	Part Number	Qty.	Description
1	125-3107	1	Suspension Seat ASM
2	109-9034	4	Isolator-Seat
3	104-8301	4	Nut-HF, NI
4	116-3860-03	1	Plate-Tilt, Seat Support
5	3230-23	11	Screw-CARR
6	104-8300	18	Nut-HF, NI
7	116-3859-03	1	Plate-Frame, Seat
8	26-4840	4	Spacer-Pin, Mounting
9	125-9385	1	Seat Mount ASM

Ref.	Part Number	Qty.	Description
9:3	125-9383	1	Decal-Service Aid
10	109-9881-03	1	Plate-Latch, Seat
11	3230-4	1	Bolt-CARR
12	107-3017	1	Spring-Compression
13	9266934	2	Screw
14	119-2507	1	Decal
15	116-1297	2	Screw-Shoulder
16	116-0070	1	Rod-Prop
17	3256-23	1	Washer-Plain

Seat Assembly No. 125-3107

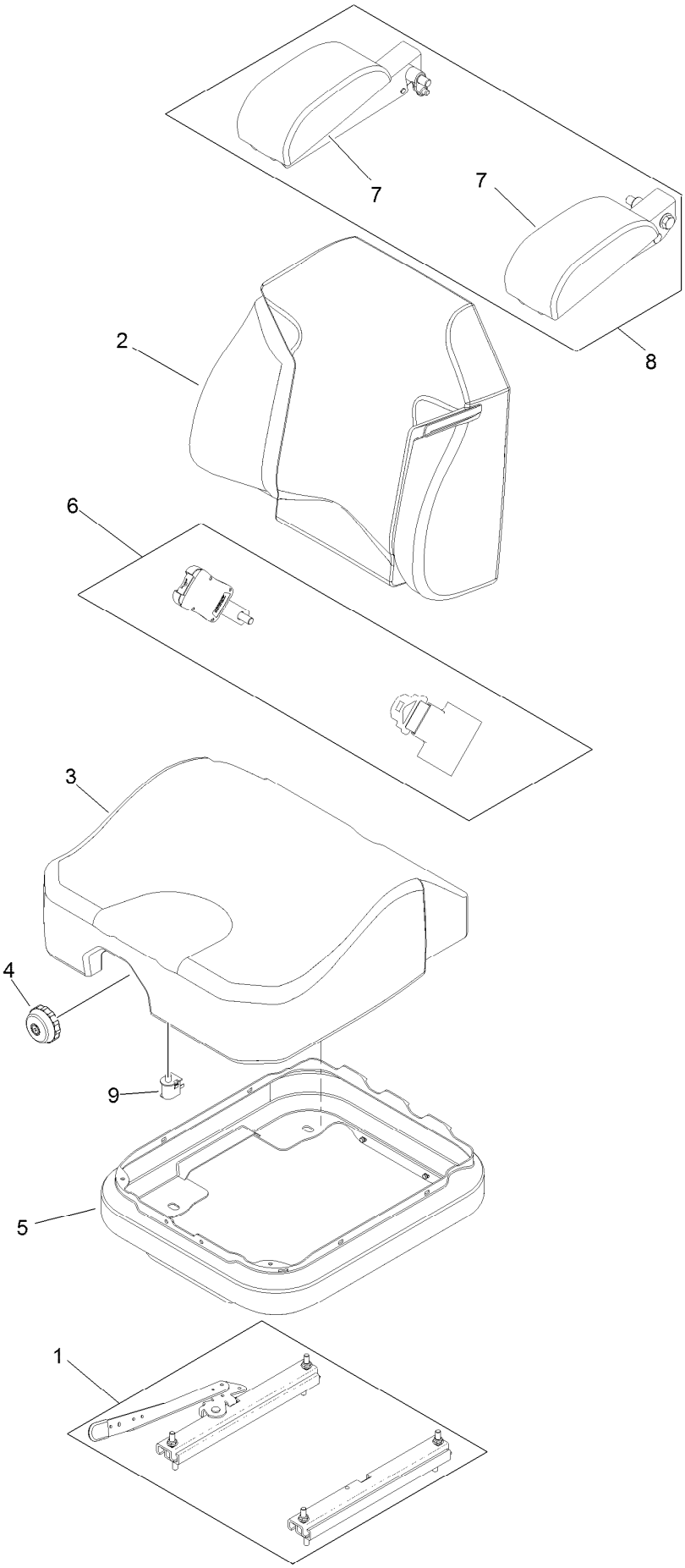

Seat Assembly No. 125-3107 (continued)

Ref.	Part Number	Qty.	Description
1	116-8910	1	Seat Track Set
2	125-3112	1	Cover-Back
3	125-3111	1	Cover-Cushion
4	116-8911	1	Knob-Adjuster
5	116-5659	1	Cover-Suspension Bellows
6	126-2061	1	Seat Belt Service Kit
7	109-9802	1	Arm Rest Pad Set
8	109-9803	1	Arm Rest Set
9	82-2190	1	Switch-Bail

Motion Control Assembly

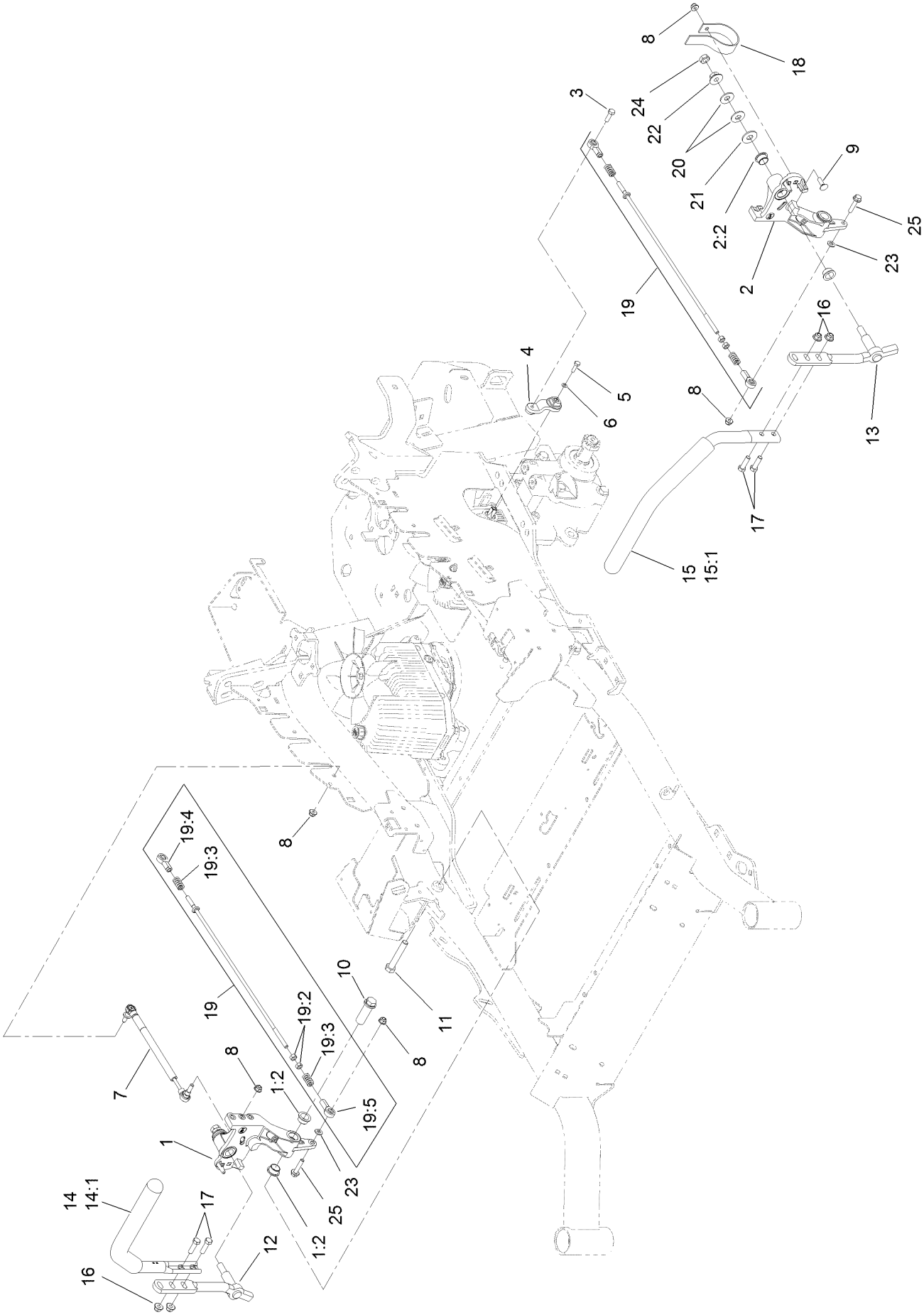

Motion Control Assembly (continued)

Ref.	Part Number	Qty.	Description
1	116-0880	1	RH Motion Control And Bushing ASM
1:2	109-8054	4	Bushing-Flange
2	116-0881	1	LH Motion Control And Bushing ASM
2:2	109-8054	4	Bushing-Flange
3	116-0648	2	Screw-HH, Thread Locking ●
4	109-4581	2	Arm-Control, Pump
5	9080046	2	Screw-HH ●
6	1-303435	2	Washer-Spring
7	116-0027	2	Damper-Control, Motion
8	104-8300	8	Nut-HF, NI
9	3230-2	2	Bolt-CARR
10	109-5891	2	Hub-Threaded
11	325-12	2	Screw-HH
12	116-0039	1	Lever-Control Motion, RH
13	116-0040	1	Lever-Control Motion, LH

Ref.	Part Number	Qty.	Description
14	109-6589	1	RH Steering Handle ASM
14:1	109-5668	1	Grip-Control, Lever
15	109-6590	1	LH Steering Handle ASM
15:1	109-5668	1	Grip-Control, Lever
16	104-8301	4	Nut-HF, NI
17	323-7	4	Screw-HH
18	109-5575	2	Spring-Leaf
19	109-8106	2	Front Pump Linkage ASM
19:2	3219-2	2	Nut-Hex
19:3	1-323245	2	Spring-Compression
19:4	1-633152	1	Balljoint-LH
19:5	1-543017	1	Balljoint-RH
20	109-9505	4	Washer-Spring
21	3256-6	2	Washer-Flat
22	32128-56	2	Nut-HF
23	3256-23	2	Washer-Plain
24	3218-5	2	Nut-Jam
25	115-1794	2	Screw-HHF

● Use Pro-Lock, Nut Type (P/N 1-840022, .5ml tube) on threads.

Control Console Assembly

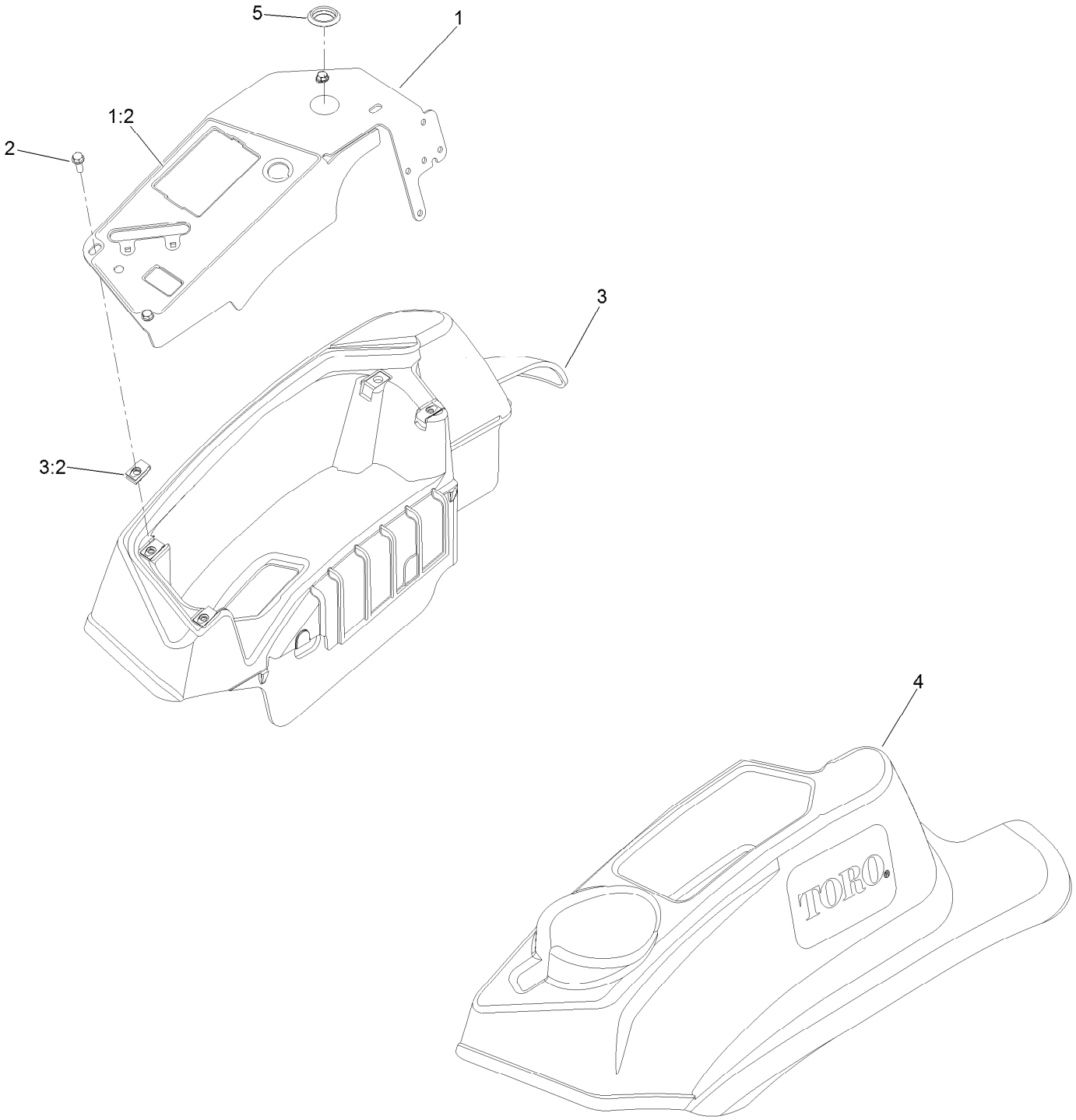

Control Console Assembly (continued)

Ref.	Part Number	Qty.	Description
1	137-9200	1	Control Panel ASM
1:2	137-9208	1	Decal-Panel, Control
2	32105-15	4	Screw-HWH
3	119-2603	1	RH Console ASM
3:2	107069	4	Clip
4	119-2602	1	Console-LH
5	116-1875	1	Plug-Plastic

Electrical Assembly

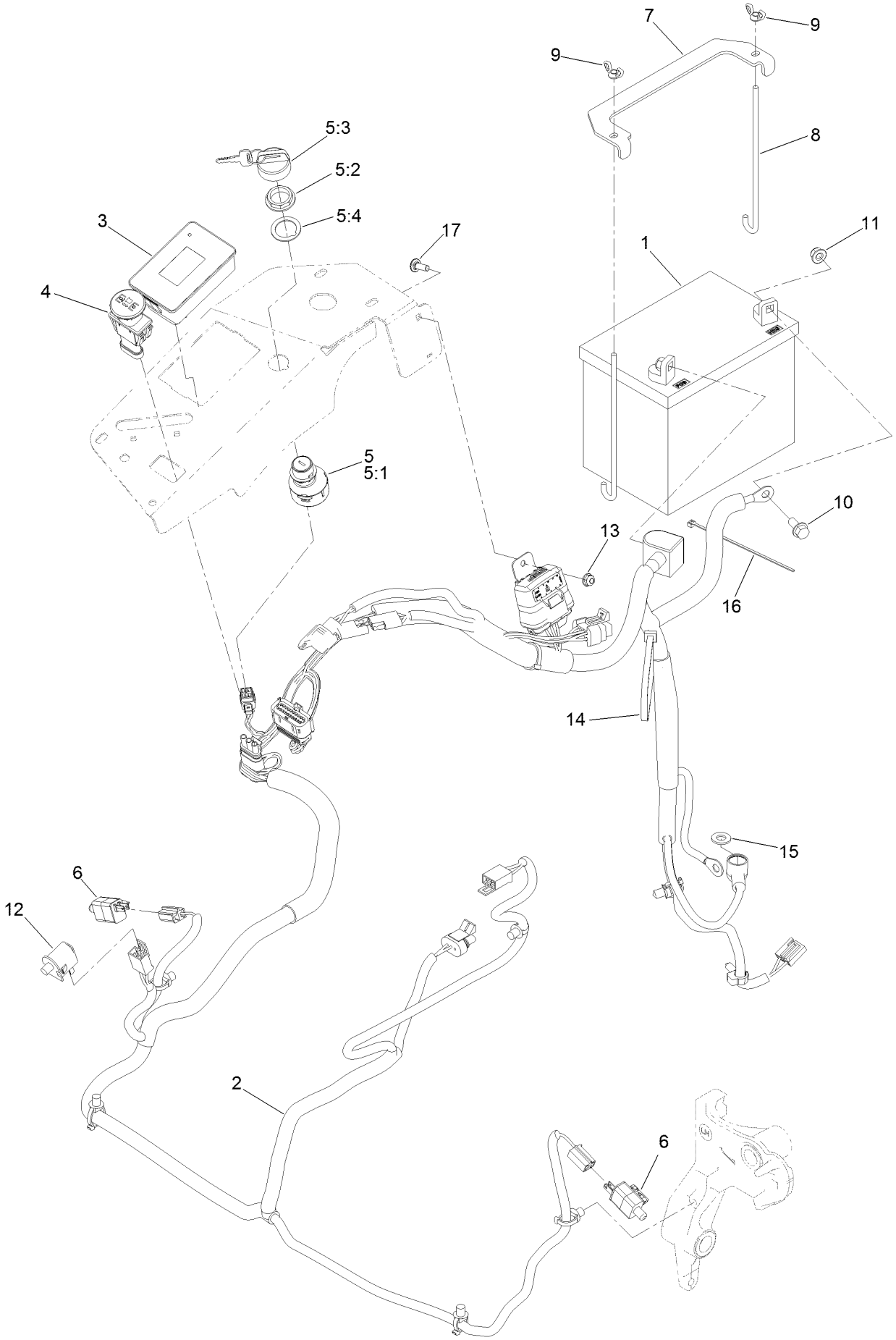

Electrical Assembly (continued)

Ref.	Part Number	Qty.	Description
1	104-8162	1	Battery-Dry
2	135-5753	1	Harness-Wire ASM
3	135-2471	1	Meter-Hour
4	126-6187	1	Switch-PTO, Sealed
5	126-6285	1	Ignition Switch ASM
5:1		1	Switch-Ignition ●
5:2	108-8660	1	Nut-Mounting
5:3	106-5270	1	Ignition Key Set
5:4	108-8659	1	Washer-Backup
6	110-6765	2	Switch
7	116-0042-03	1	Strap-Tie Down, Battery

Ref.	Part Number	Qty.	Description
8	1-633651	2	Bolt-Holddown
9	1-543792	2	Wingnut
10	3234-5	2	Screw-HHF
11	104-8300	2	Nut-HF, NI
12	82-2190	1	Switch-Bail
13	104-7201	1	Nut-HF
14	1-303335	1	Tie-Plastic
15	3256-24	1	Washer-Flat
16	1-303287	1	Tie-Cable
17	1-807512	1	Bolt-CARR

● Not serviced separately

Wire Harness Assembly No. 135-5753

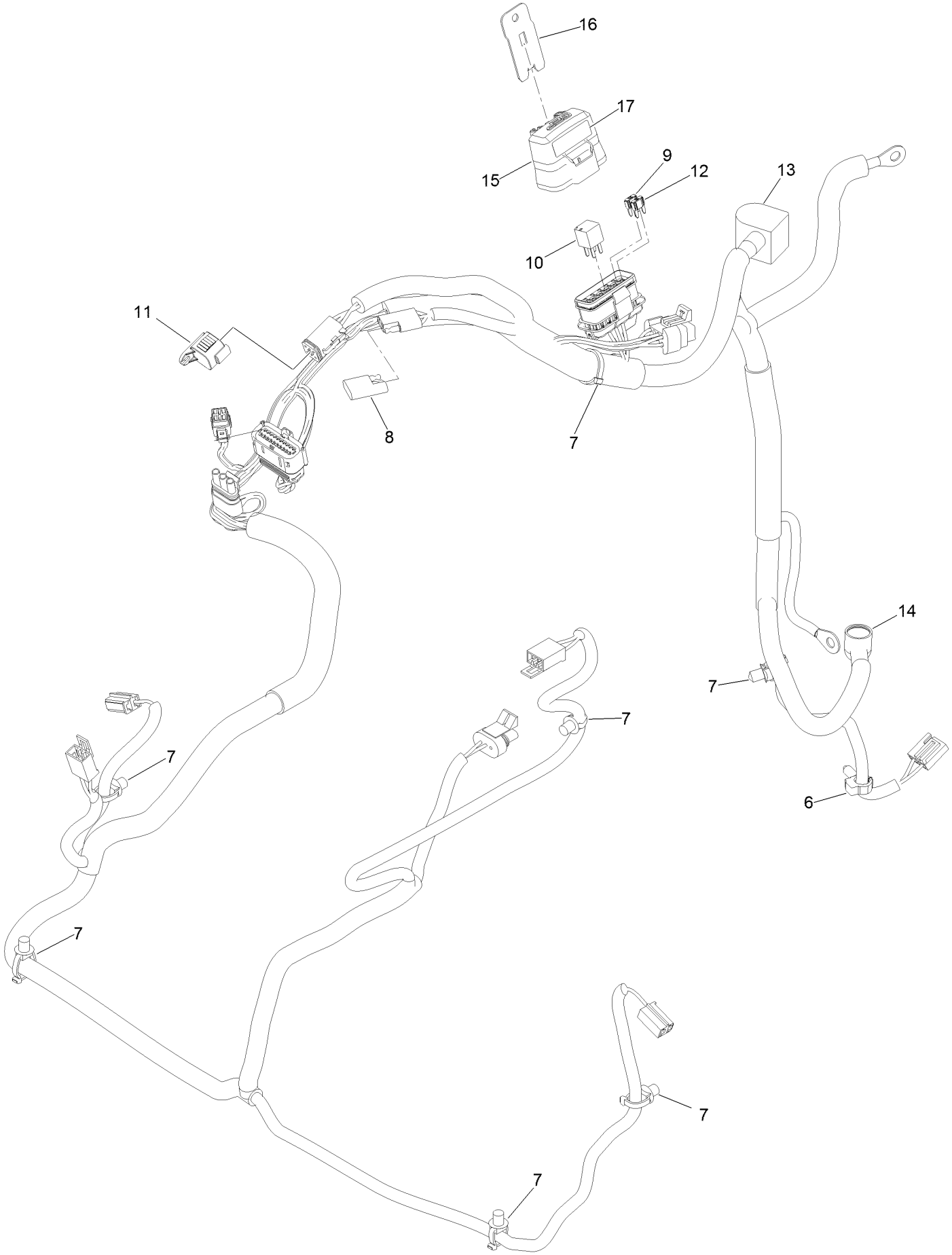

Wire Harness Assembly No. 135-5753 (continued)

Ref.	Part Number	Qty.	Description
6	32180-037	2	Clip-Harness
7	32180-030	6	Clip-Tie
8	32180-197	1	Cap-Plug
9	121-8868	1	Fuse-Mini Blade, 20 Amp
10	126-3991	1	Relay-Micro
11	32180-156	1	Cap-Plug, 6 Way
12	121-8867	1	Fuse-Mini Blade, 15 Amp
13	126-8876	1	Insulator-Battery
14	1-543393	1	Insulator-Solenoid
15	32180-176	1	Cover-Block, Fuse
16	32180-177	1	Clip-Mounting
17	126-7875	1	Decal-Fuse

Deck Lift Assembly

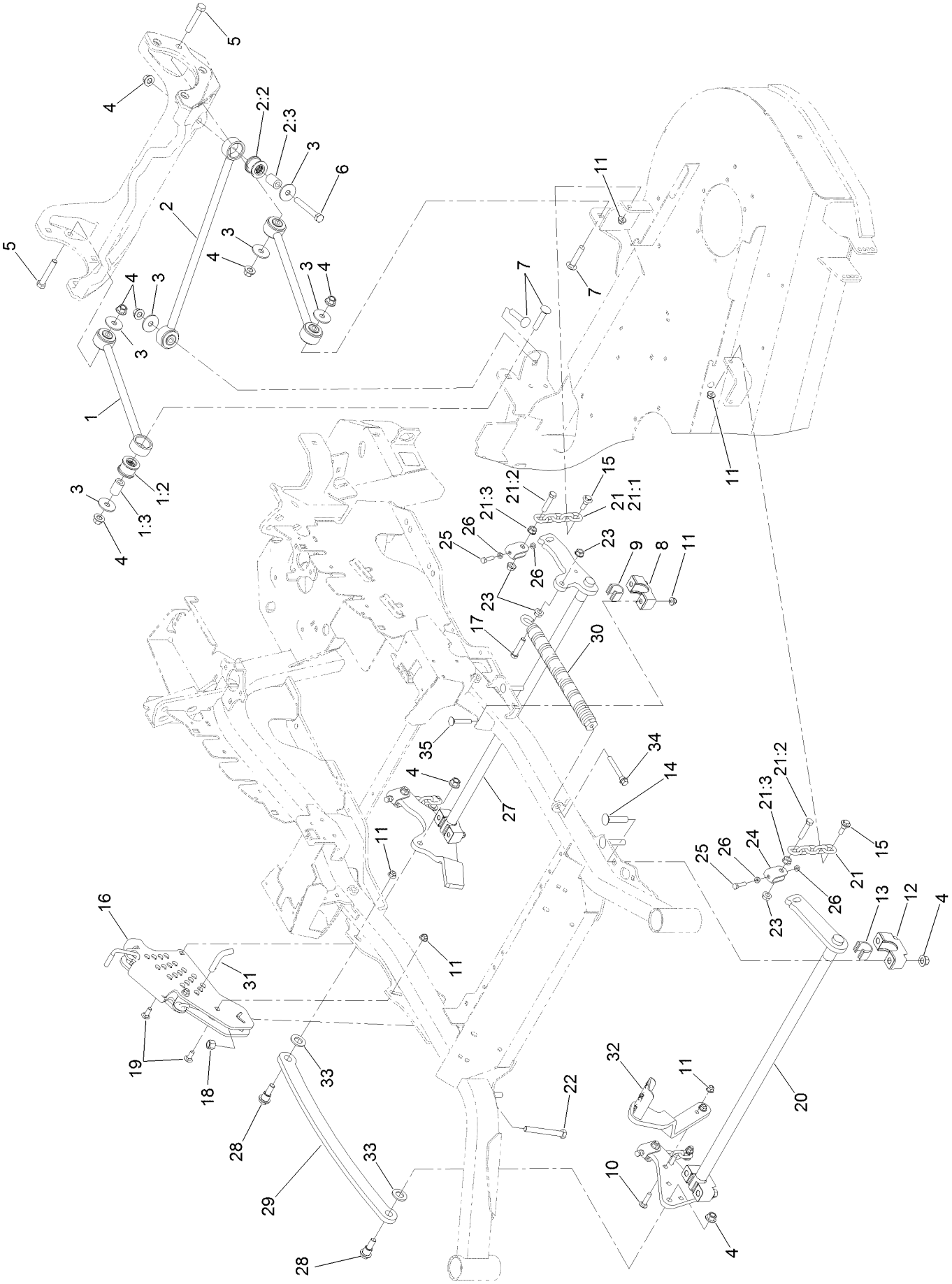

Deck Lift Assembly (continued)

Ref.	Part Number	Qty.	Description
1	109-7952	2	Deck Strut ASM
1:2	109-5009	2	Bushing-Suspension, Rubber
1:3	109-5010	2	Spacer
2	109-5013	1	Panhard Rod ASM
2:2	109-5009	2	Bushing-Suspension, Rubber
2:3	109-5010	2	Spacer
3	86-1990	6	Washer-Thrust
4	99-5107	12	Nut-Lock
5	325-12	2	Screw-HH
6	325-17	1	Screw-HH
7	3233-34	3	Screw-CARR
8	127-0553	2	Support-Cross Shaft, Bearing Rear
9	109-7173	2	Bearing-Cross Shaft, Rear
10	3231-4	2	Screw-CARR
11	104-8301	12	Nut-HF, NI
12	109-9409	2	Support-Cross Shaft, Bearing
13	109-9410	2	Bearing-Cross Shaft, Front
14	116-1700	4	Bolt-CARR
15	109-9840	4	Screw-Shoulder, HHF
16	109-7438	1	HOC ASM
17	109-9065	1	Screw-HH
18	3296-23	1	Nut-Lock, NI
19	3231-2	2	Bolt-CARR
20	126-2475-03	1	Decklift-Front
21	116-0756	4	Deck Lift Chain ASM
21:1	1-633447	1	Chain-Lift, Deck
21:2	109-9065	1	Screw-HH
21:3	32128-37	1	Nut-HF
22	116-0559	1	Bolt-TAP
23	32128-37	6	Nut-HF
24	109-9066	4	Yoke-Adjust, Deck
25	322-47	4	Screw-HH
26	3218-2	8	Nut-Jam
27	116-0459-03	1	Lift-Deck, Rear
28	116-0780	2	Screw-Shoulder, HHF
29	116-0797-03	1	Link-Lift, Deck
30	116-0000	1	Spring-Extension
31	116-5584	1	Pin-HOC
32	116-1919-01	1	Lever-Foot
33	3256-28	2	Washer-Flat
34	92-7674	1	Bolt-Shoulder
35	3231-7	4	Screw-CARR

Height-of-Cut Assembly No. 109-7438

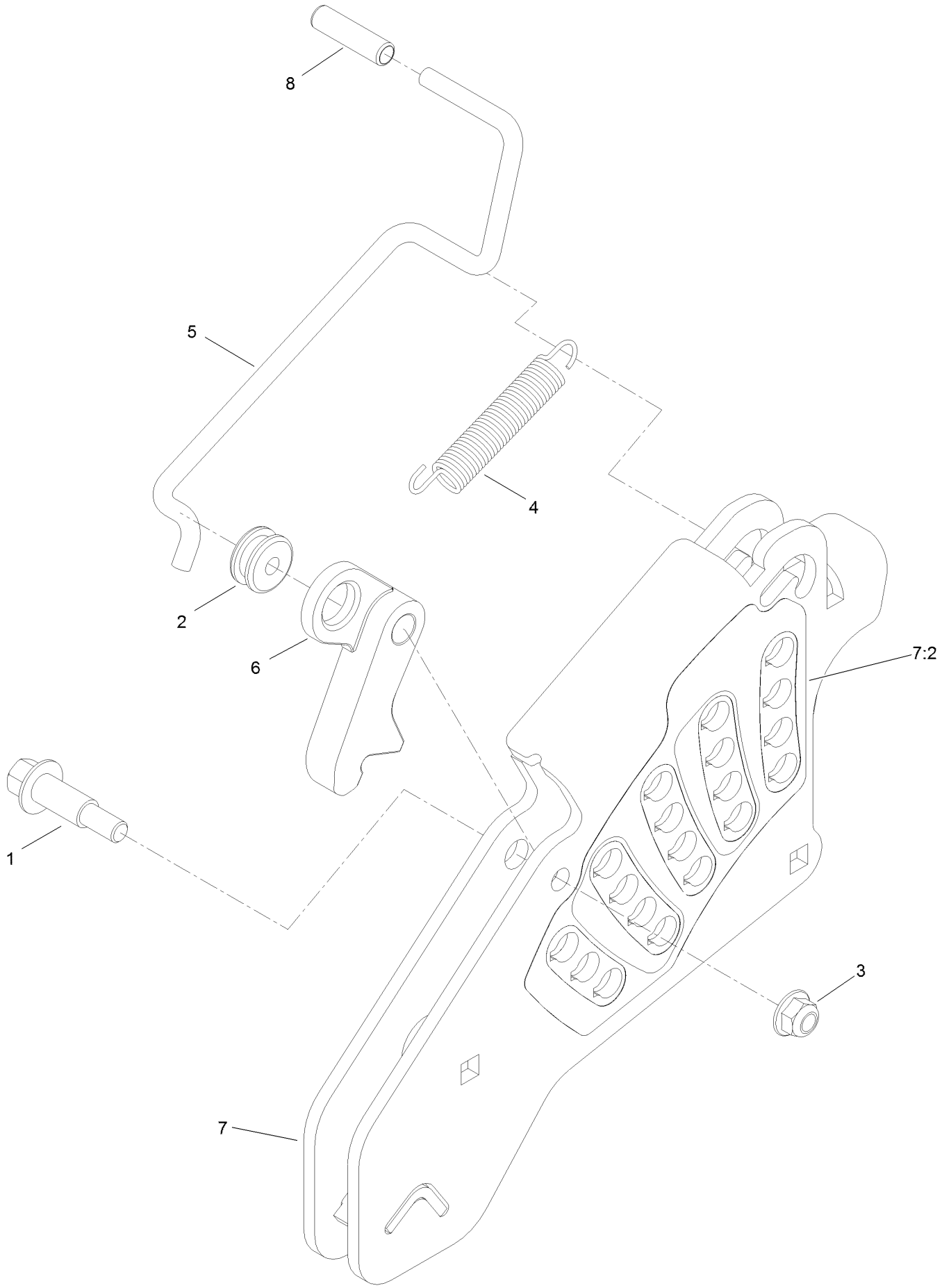

Height-of-Cut Assembly No. 109-7438 (continued)

Ref.	Part Number	Qty.	Description
1	62-1330	1	Bolt-Shoulder
2	109-7130	1	Grommet
3	104-8301	1	Nut-HF, NI
4	109-7124	1	Spring-Extension
5	109-7128	1	Rod-Lock, Transport
6	116-0118	1	Pawl-Transport, HOC
7	109-7335	1	HOC Plate ASM
7:2	126-4398	1	Decal-HOC
8	109-8250	1	Grip-Lever

Engine, Clutch and Muffler Assembly

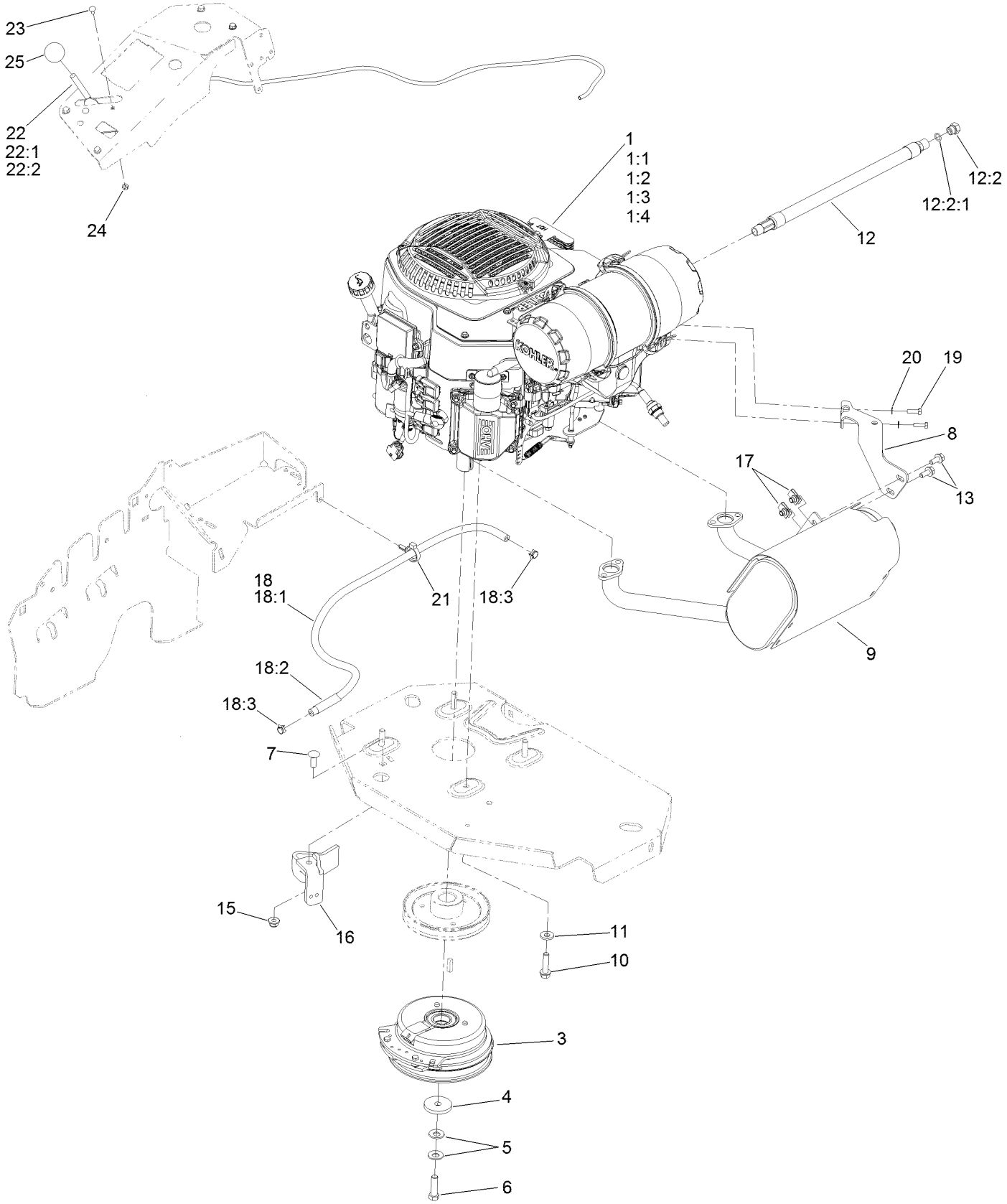

Engine, Clutch and Muffler Assembly (continued)

Ref.	Part Number	Qty.	Description
1		1	Engine-Kohler Ecv740-3059 ▲◆
1:1		1	Kohler 52 050 02-S Engine Oil Filter ▲◆
1:2		1	Kohler 25 083 01-S Engine Air Filter ▲◆
1:3		1	Kohler 25 083 04-S Safety Filter ▲◆
1:4		1	Kohler 25 050 42-S Fuel Filter ▲◆
3	116-1620	1	Clutch Kit
4	109-6919	1	Washer-Clutch
5	1-603610	2	Washer-Spring
6	109-9761	1	Screw-HH ❑
7	3231-22	1	Screw-CARR
8	116-4297	1	Muffler Bracket Kit
9	135-2127	1	Muffler Kit
10	32144-102	4	Screw-HWH
11	98-5975	4	Washer-Belleville
12	116-5316	1	Oil Drain Hose ASM ■
12:2	353-508	1	Plug-HH ●
12:2:1	237-42	1	O-Ring
13	3234-5	2	Screw-HHF
15	104-8301	1	Nut-HF, NI
16	116-2612-01	1	Clutch-Anchor
17	94-2413	2	Nut-U
18	117-3893	1	Fuel Line ASM
18:1	109-0273	1	Hose-Fuel
18:2	117-3892	1	Sleeve-Thermal
18:3	2412-98	2	Clamp-Hose
19	116-4295	2	Screw-HH
20	1-303435	2	Washer-Spring
21	105-1853	1	Clamp-Hose
22	115-2752	1	Throttle Control ASM
22:1	112-2334	1	Lever-Throttle
22:2	115-3868	1	Cable-Throttle
23	1-807513	2	Bolt-CARR
24	3296-2	2	Nut-Lock, NI
25	1-603175	1	Knob-Ball

● Torque to 24-26 ft-lb
▲ Not serviced separately
❑ Use Pro-Lock, Nut Type (P/N 1-840022, .5ml tube) on threads.
■ Torque to 17-23 ft-lb
◆ Obtain parts from www.kohlerplus.com

Deck Assembly

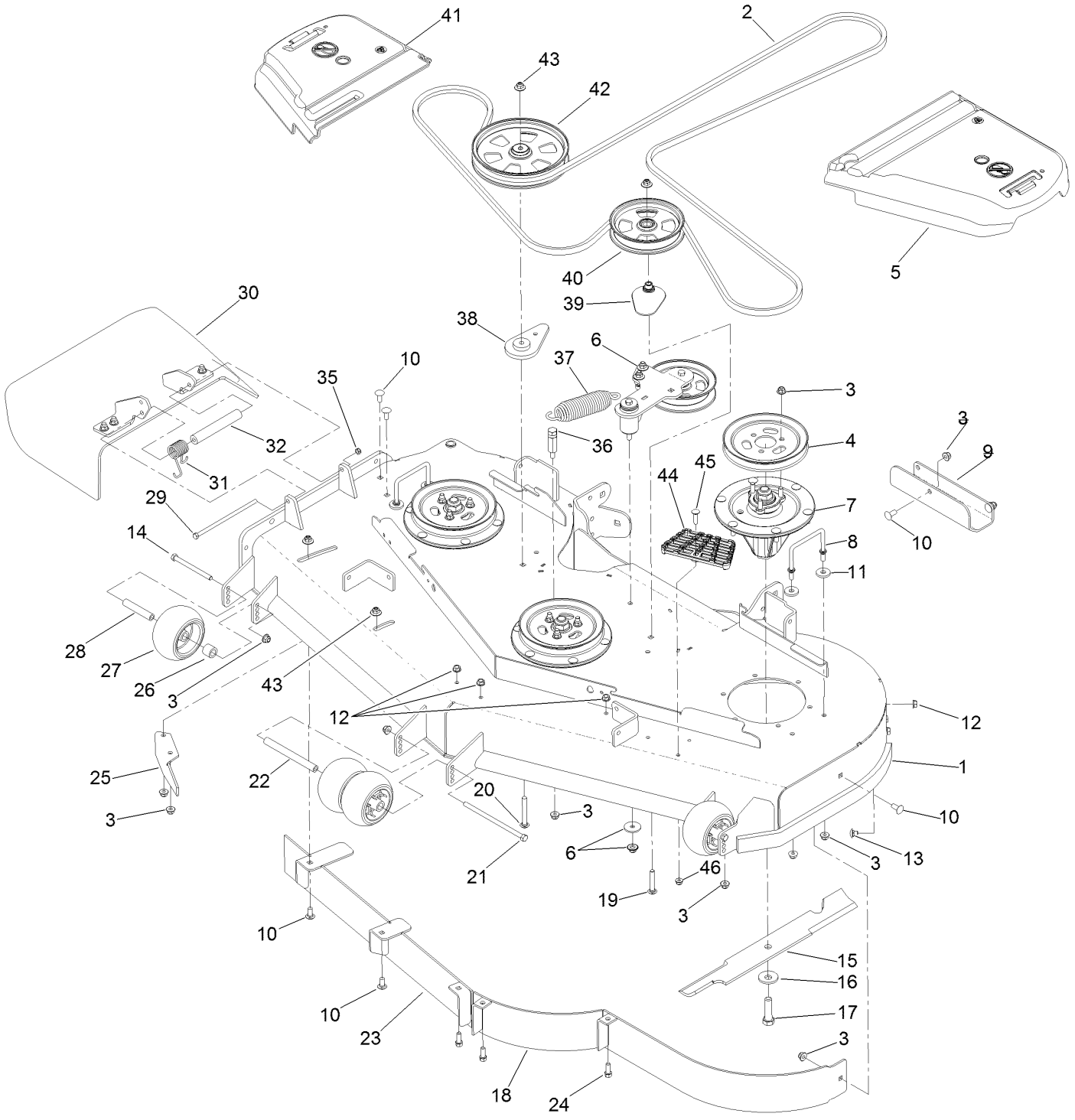

Deck Assembly (continued)

Ref.	Part Number	Qty.	Description
1	136-8639	1	Deck Decal ASM
2	114-5858	1	Belt-V
3	104-8301	42	Nut-HF, NI
4	105-7734	3	Pulley
5	109-6938	1	Cover-Belt, LH
6		1	Idler Arm ASM ●
7	127-0560	3	Spindle ASM
8	109-6982	2	Wireform-Cover
9	121-8031-01	1	Plate-Skid
10	3231-27	9	Screw-CARR
11	1-373034	4	Washer
12	3290-357	6	Nut-HHF, Whiz
13	108-5387	3	Screw-CARR
14	323-23	2	Screw-HH
15	105-7718-03	3	Blade-Hi Flow
16	103-0865	3	Washer-Blade Bolt, Heavy
17	51-4060	3	Screw-Blade
18	114-5842-01	1	Baffle
19	3231-40	1	Bolt-CARR, Short Neck
20	3231-42	1	Screw-CARR
21	108-5388	1	Screw-HH
22	98-5967	1	Spacer-Wheel
23	115-7465-01	1	Baffle
24	92-1624	3	Screw-HWH
25	106-3216-01	1	Baffle-Discharge
26	98-7913	2	Tube-Spacer
27	1-603299	4	Roller-Scalp, Anti
28	98-7912	2	Tube-Spanner
29	322-50	1	Screw-HH
30	108-2792	1	Rubber Deflector ASM
31	108-4052	1	Spring-Torsion
32	105-4622	1	Spacer
35	3296-47	1	Nut-Lock, NI
36	114-5867	1	Anchor-Spring, Tall
37	116-6317	1	Spring-Extension
38	109-9416	1	Spacer-Idler
39	109-2872	1	Spacer-Pulley
40	136-5404	1	Pulley-Idler, Flat
41	116-0094	1	Cover-Belt, RH
42	132-4734	1	Pulley-Idler,Flat
43	109-6658	4	Nut-Flange, NI
44	126-4781-03	1	Step-Deck
45	3230-3	1	Screw-CARR
46	104-8300	1	Nut-HF, NI

● Not serviced separately

Deck Decal Assembly No. 136-8639

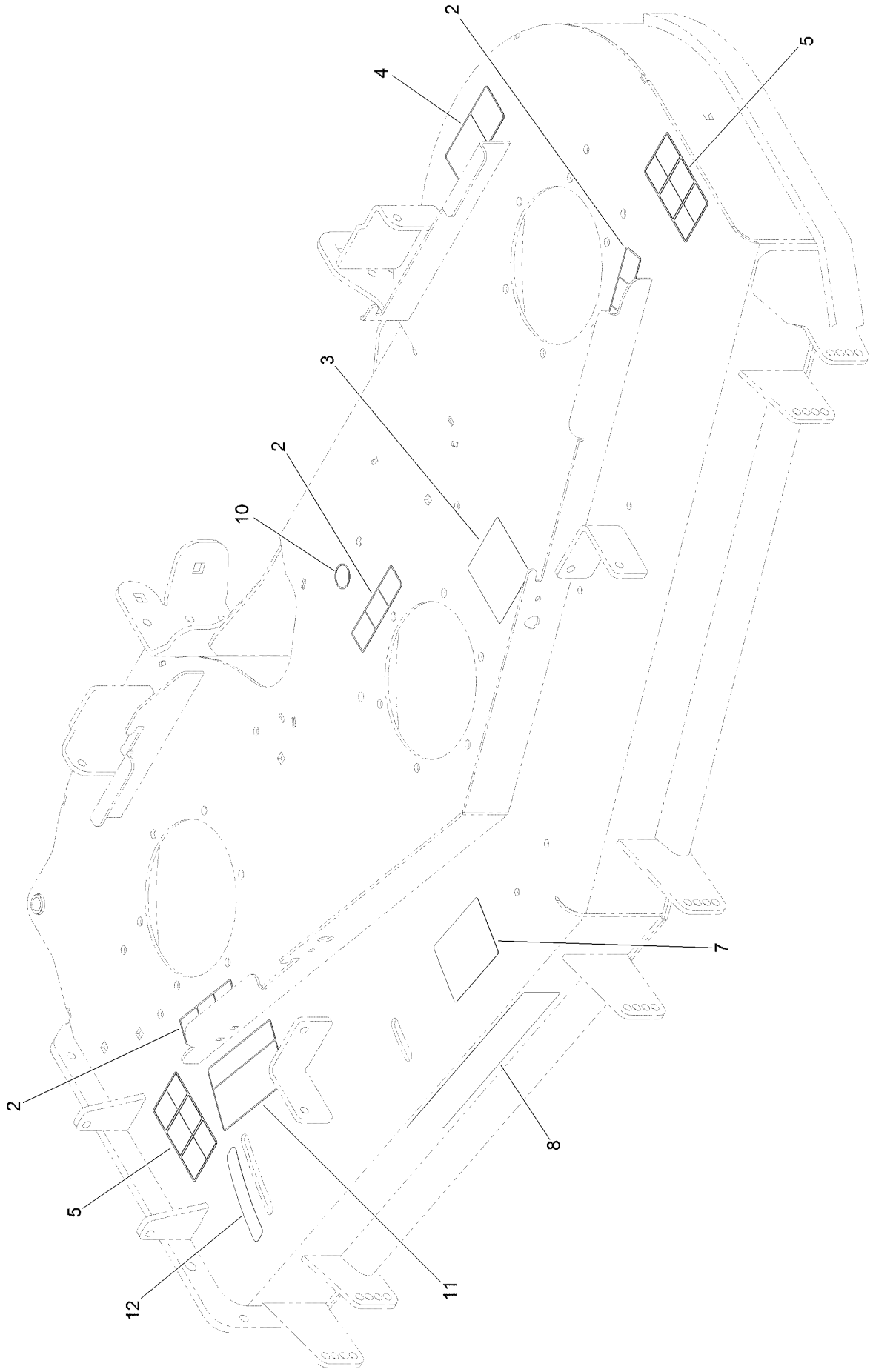

Deck Decal Assembly No. 136-8639 (continued)

Ref.	Part Number	Qty.	Description
2	112-9028	3	Decal-Cover, Missing
3	136-5508	1	Decal-Routing, Deck Belt
4	93-7818	1	Decal-Torque, Blade Bolt
5	117-3848	2	Decal-Danger
7	127-0326	1	Decal-Scalp, Anti
8	107-1619	1	Decal
10	58-6520	1	Decal-Grease
11	110-2068	1	Decal-Adjustment, Baffle
12	110-2067	1	Decal-Setting, Baffle

Idler Arm Assembly

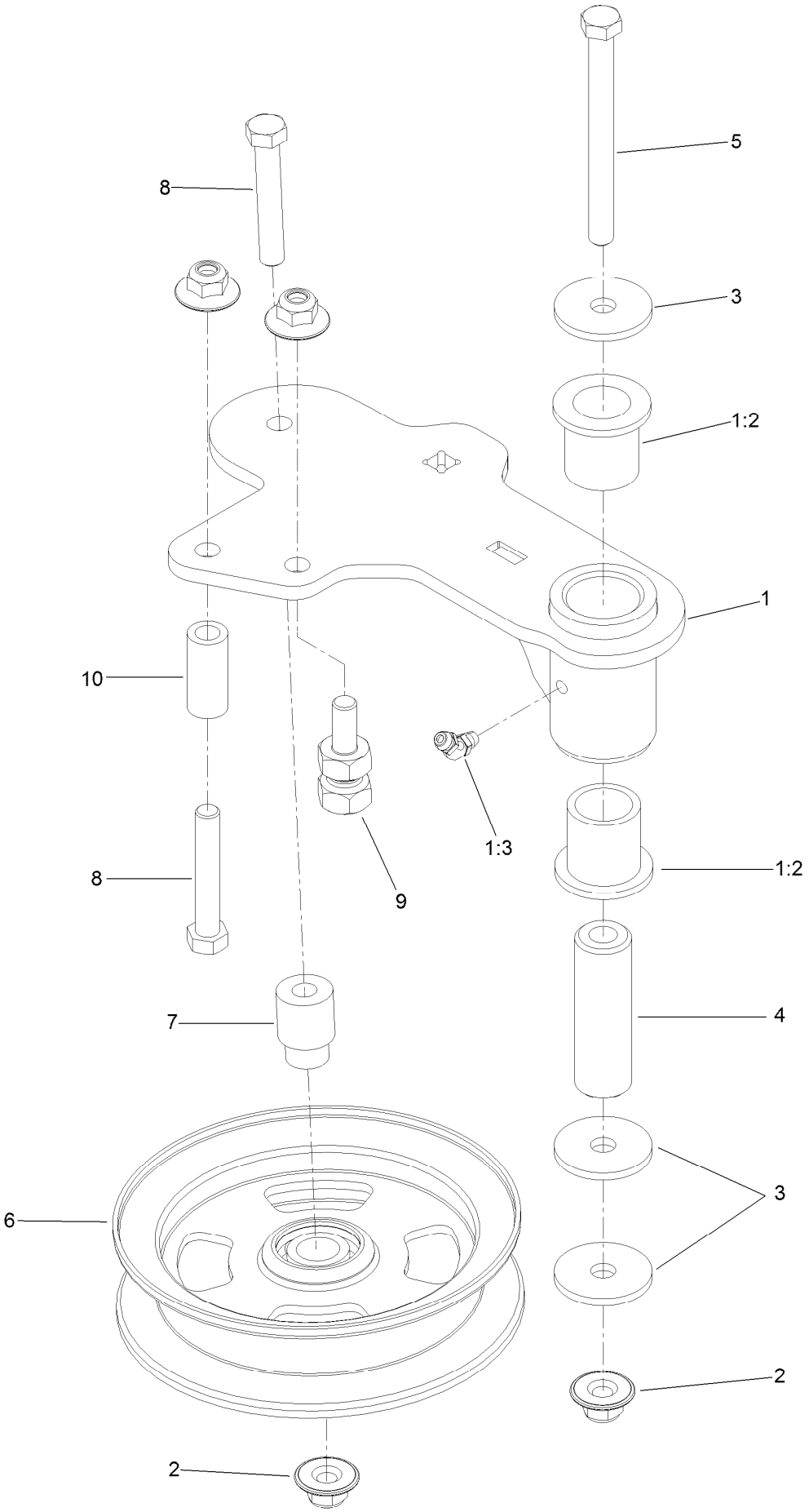

Idler Arm Assembly (continued)

Ref.	Part Number	Qty.	Description
1	114-5870	1	Idler Arm ASM
1:2	1-303514	2	Bearing-Flanged
1:3	1481	1	Fitting-Grease
2	109-6658	4	Nut-Flange, NI
3	1-213069	3	Washer
4	114-5848	1	Spacer-Plain
5	98-5961	1	Screw-HH
6	132-9425	1	Pulley-Idler, Flat
7	112-4212	1	Mount-Pulley
8	323-11	2	Screw-HH
9	132-4729	1	Anchor-Spring, Short
10	104-0151	1	Spacer

Spindle Assembly No. 127-0560

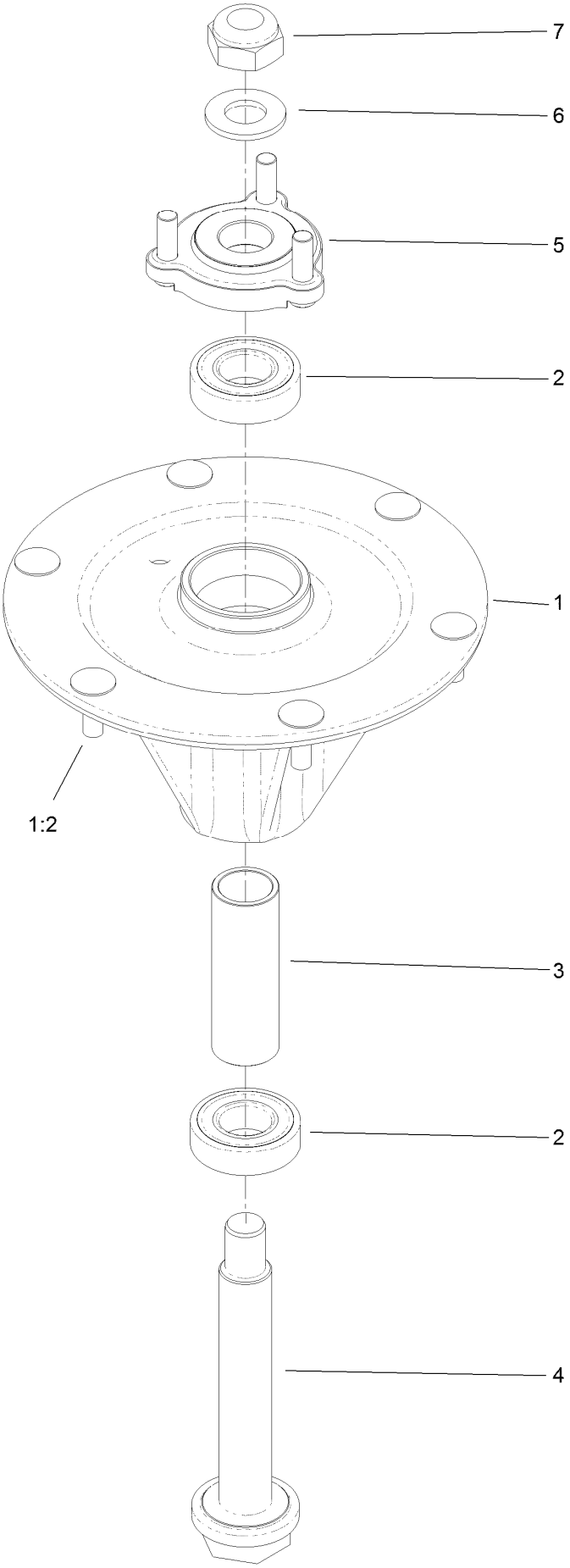

Spindle Assembly No. 127-0560 (continued)

Ref.	Part Number	Qty.	Description
1		1	Spindle Housing ASM W/Studs ●
1:2	114-8195	6	Bolt-Ribbed Neck
2	116-0720	2	Bearing-Ball
3	127-0554	1	Spacer-Bearing
4	127-0556	1	Shaft-Spindle, Ball Bearing
5	127-0557	1	Hub-Spindle (W/Studs)
6	92-5836	1	Washer
7	3296-67	1	Nut-Lock, NI

● Not serviced separately

Rubber Deflector Assembly No. 108-2792

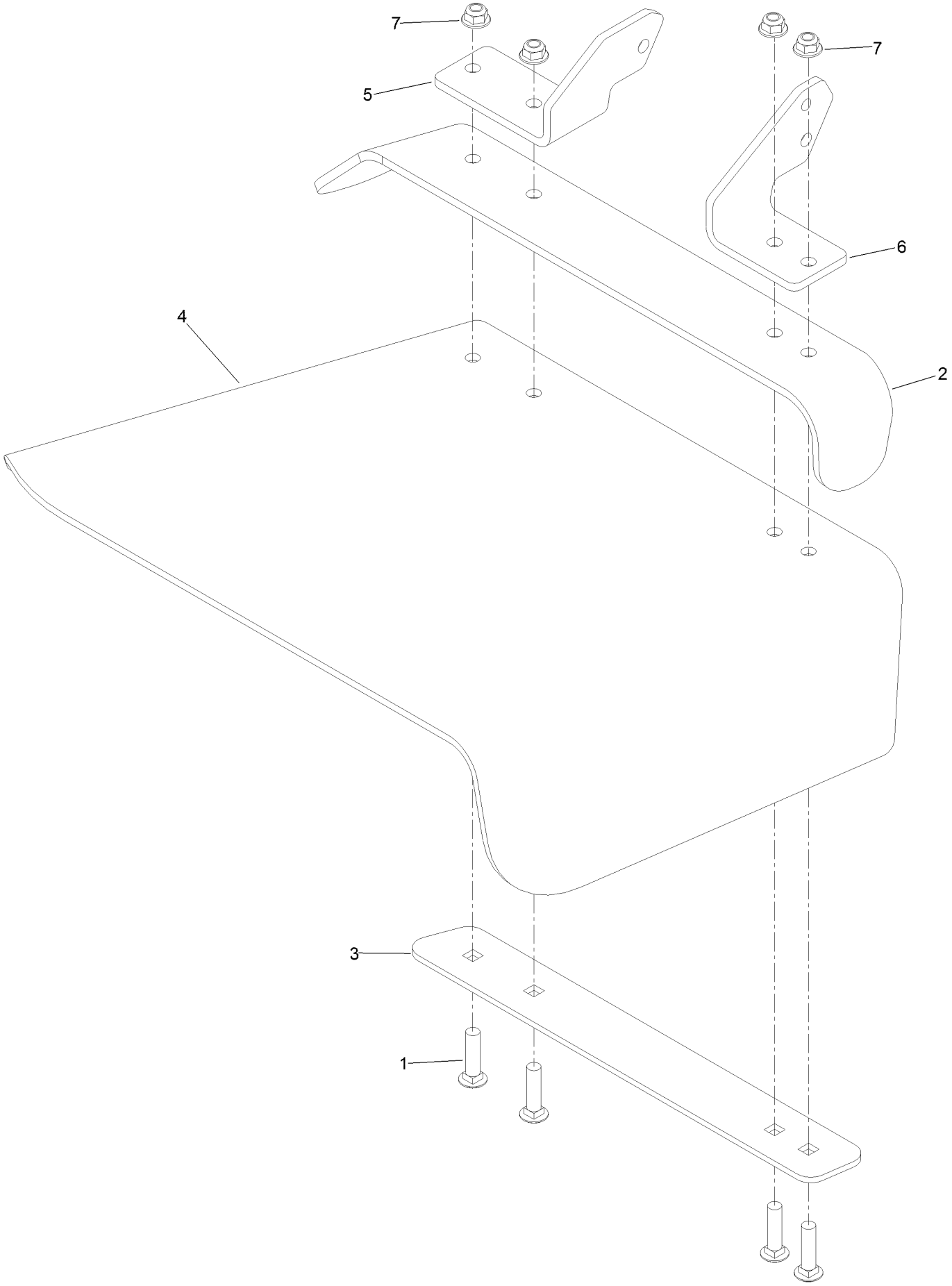

Rubber Deflector Assembly No. 108-2792 (continued)

Ref.	Part Number	Qty.	Description
1	3231-4	4	Screw-CARR
2	106-3246-01	1	Deflector
3	106-3248-03	1	Strap-Discharge
4	108-5029	1	Deflector-Rubber
5	108-4059-01	1	Plate-Hinge, Rear
6	106-3253-01	1	Plate-Hinge, Front
7	104-8301	4	Nut-HF, NI

Frame Decal Assembly

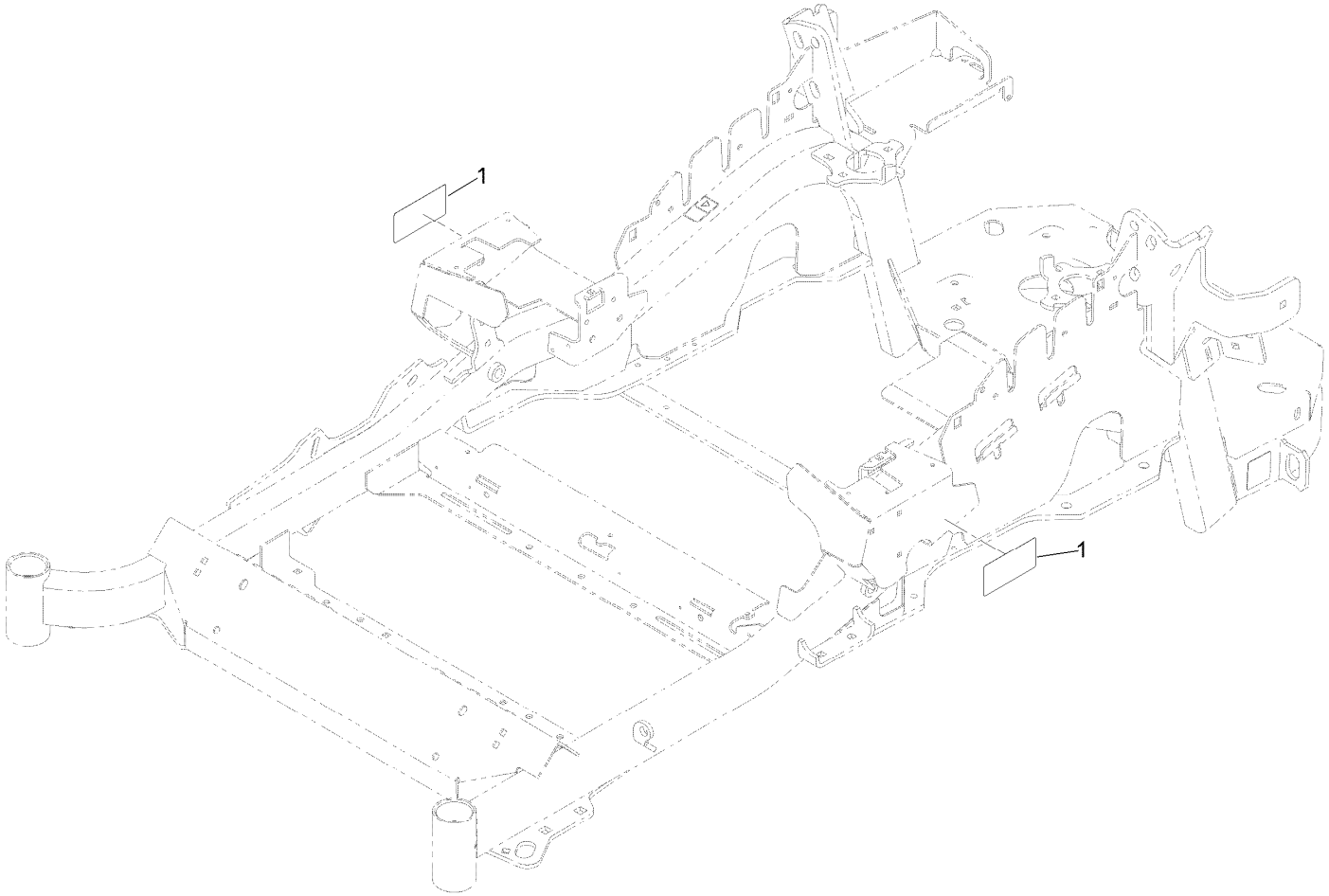

Frame Decal Assembly (continued)

Ref.	Part Number	Qty.	Description
1	120-5894	2	Decal

Attachments and Accessories

For 74930 Z Master Professional 5000 Series Riding Mower with 60in TURBO FORCE Side Discharge Mower

Product Name	Model/Part
Blower and Drive Kit	78553
E-Z Vac Triple Bagging System	78563
E-Z Vac DFS Collection System	78567
Deluxe Suspension Seat Kit	117-6174
Deluxe Seat Kit	121-7595
Recycler Kit	115-7468
Operator Controlled Discharge Chute Kit	117-3600
Bimini Folding Shade Assembly	115-4510
Z Stand Kit	121-4811
Seat Cover W/arm rest	117-0095
Power Deck Lift Kit	132-5986
Light Kit	116-1154
Hitch Kit	109-9487
Trash Holder Kit	TC26
Blade-Hi Flow, 20.5in	105-7718-03
Blade-Mid Flow, 20.5in	105-7715-03
Blade-Lo Flow, 20.5in	105-7716-03
Blade-Atomic, 20.5in	105-8777-03
Blade-Recycler, 20.5in	105-7777-03
6 Pack Blade, 20.5in Hi-Flow	108-1114
6 Pack Blade, 20.5in Mid-Flow	108-1123
6 Pack-Blade, 20.5in Lo Flow	108-1128
6 Pack-Blade, 20.5in Atomic	108-1115
6 Pack-Blade, 20.5in Recycler	110-0405
Roller Striper Kit	115-7470
Filter Minder Gauge	99-4664
Spark Arrestor Screen	75-6880
Anti-Scalp Kit (Trim Side)	108-4140
Turbo Baffle Kit	107-1634
Jack Kit	127-6666
Seat Tilt Frame And Iso Mount Kit	121-7596
MVP Belt and Blade Kit	127-1639
Jack Mount Kit	127-6665
Trimmer Mount	137-9769
Bucket Mount Kit	137-9216
Toro Deluxe Rider Cover	490-7319
Hypr-Oil 500 (quart)	114-4713
Hypr-Oil 500 (gallon)	114-4714
Hypr-Oil 500-5 (5 gallon)	114-4715

Notes:

Notes:

Notes:

TORO®

Count on it.