Form No. 3391-144 Rev D

TORO®

Count on it.

Parts Catalog

HoverPro® 500 Machine

Model No. 02604—Serial No. 315000001 and Up

Register at www.Toro.com.
Original Instructions (EN)

CE

3391-144 D

Ordering Replacement Parts

To order replacement parts, please supply the part number, the quantity, and the description of each part desired.

Understanding Reference Numbers

Each identified part in an illustration has a reference number. The reference number for a part also appears in the parts list, along with other information about the part.

This catalog uses two special reference number formats, one to indicate parts in a service assembly and another to indicate the quantity of a given part in an illustration.

Service Assembly Reference Numbers

Parts in service assemblies have reference numbers in the form a:b. The a represents the reference number of the entire service assembly and the b represents a sequential number unique to each part within the service assembly.

For example, a wheel assembly might be identified by reference number 6, the tire by 6:1, the valve by 6:2, and the wheel by 6:3. When you order the assembly identified by reference number 6, you receive all parts identified by reference numbers 6:1,6:2, and 6:3. However, you may also order any part individually. Reference numbers of this type appear in illustration and in parts lists.

Reference Numbers Indicating Quantity

In an illustration, if a reference number indicates more than one part, the reference number has the form nX y. The n represents the quantity of the part, the X is the multiplication symbol, and the y represents the reference number.

For example, in an illustration, the reference number 2X 37 means that two of the parts identified by reference number 37 are indicated.

Contents

Engine and Deck Assembly 4
Handle Assembly 6
Cutting Assembly 8
Cylinder Barrel Assembly 10
Oil Pan Assembly 12
Crankshaft Assembly 14
Piston and Connecting Rod Assembly 16
Camshaft Pulley Assembly 18
Recoil Starter Assembly 20
Fuel Tank and Fuel Pump Assembly 22
Carburetor Assembly 24
Air Cleaner Assembly 26
Muffler Assembly 28
Flywheel and Ignition Coil Assembly 30
Control Assembly 32
Label Assembly 34
Attachments and Accessories 36

© 2018—The Toro® Company
8111 Lyndale Avenue South
Bloomington, MN 55420

Contact us at www.Toro.com.
Printed in the USA.
All Rights Reserved

Engine and Deck Assembly

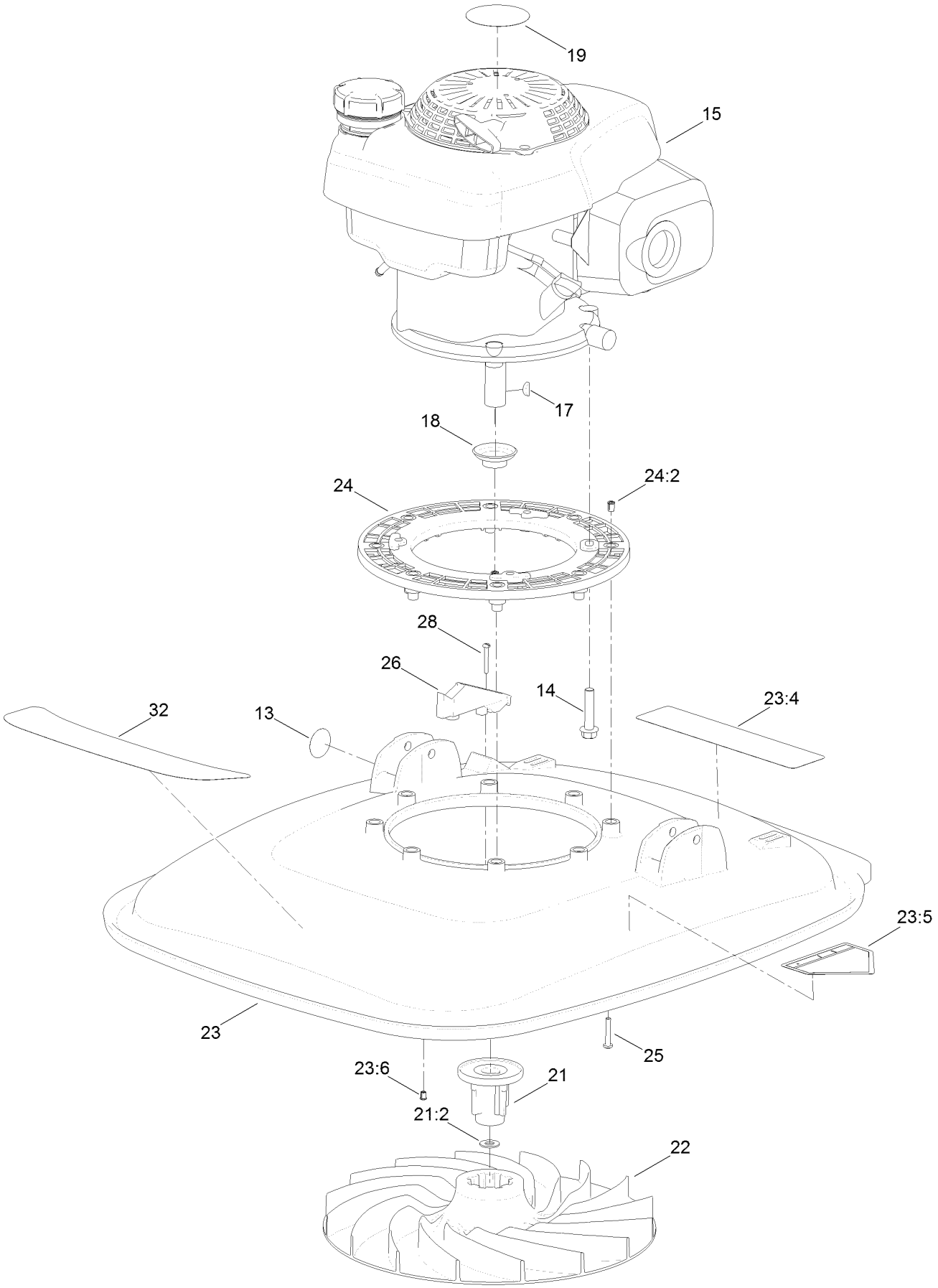

Engine and Deck Assembly (continued)

Ref.	Part Number	Qty.	Description
13	H295124	1	Decal
14	111-2157	4	Screw-Taptite
15	111-7163	1	Engine-Honda
17	1662	1	Key-Woodruff
18	H190118	1	Protector-Seal, Oil
19	111-7340	1	Decal-Engine
21	H290011	1	Drive And Spacer ASM
21:2	09479	1	Washer-Plain
22	H192268	1	Impeller
23	111-6004	1	Deck ASM

Ref.	Part Number	Qty.	Description
23:4	111-5393	1	Decal-Warning
23:5	94-8072	1	Decal-Danger
23:6	H292280	2	Insert
24	H290003	1	Frame-Engine
24:2	H192266	8	Insert-Brass
25	H292004	8	Set-Screw
26	H292269	1	Bracket
28	H292279	2	Screw
32	111-5350	1	Decal-Hover Pro, 500 Series

Handle Assembly

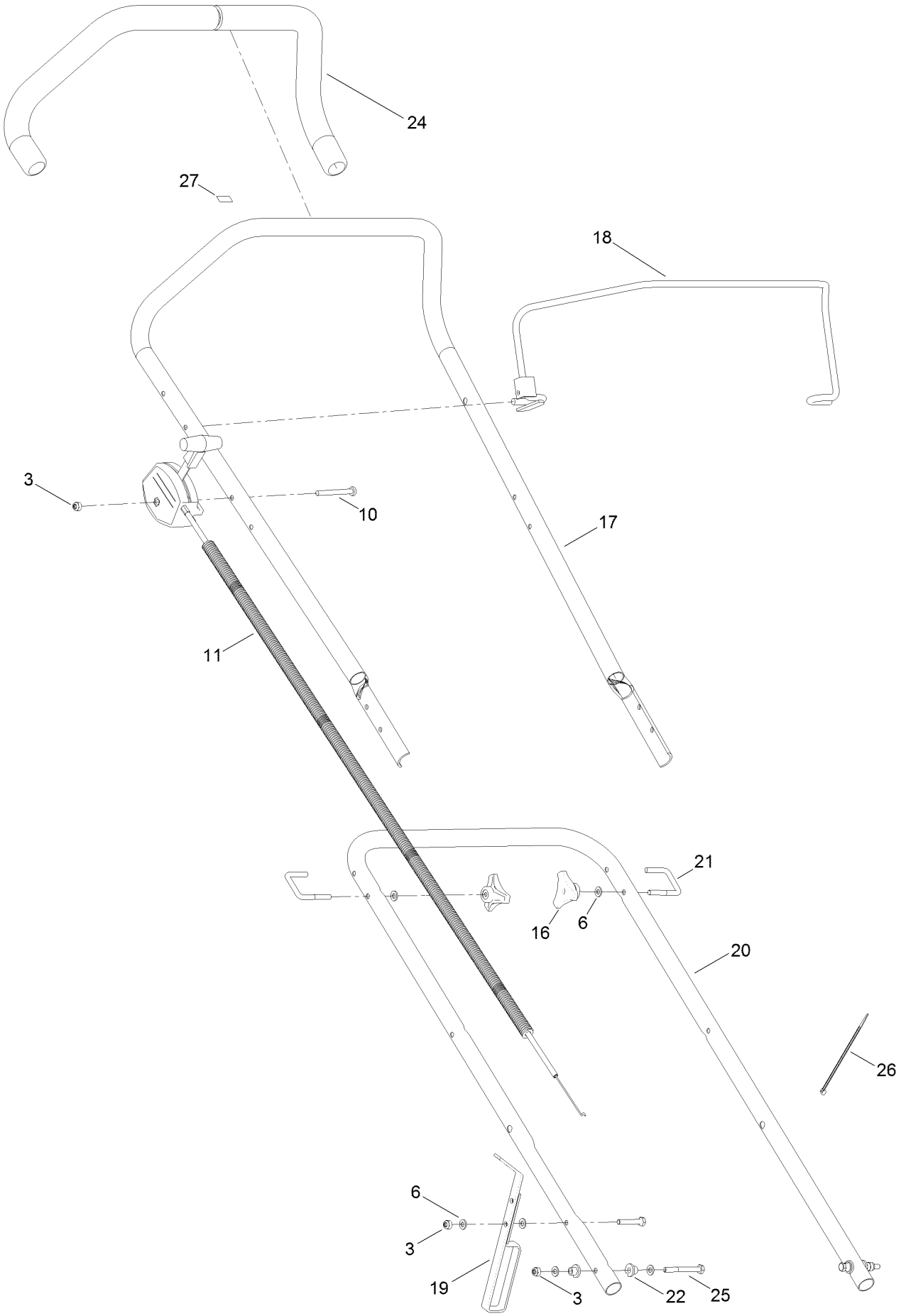

Handle Assembly (continued)

Ref.	Part Number	Qty.	Description
3	09438	4	Nut-Nyloc
6	111-7679	8	Washer-Plain
10	09780	1	Setscrew
11	111-7261	1	Throttle Control ASM
16	H192204	2	Handwheel
17	H290237	1	Handle-Upper
18	H290239	1	Arm-Bail
19	H290286	1	Footstop
20	111-7260-03	1	Handle-Lower
21	H292026	2	Bolt-U
22	H292058	4	Spacer-Handle
24	H292276	2	Grip-Handle
25	H292309	2	Bolt-Hex
26	HY3966	2	Tie-Cable
27	H295159	1	Decal-Stop

Cutting Assembly

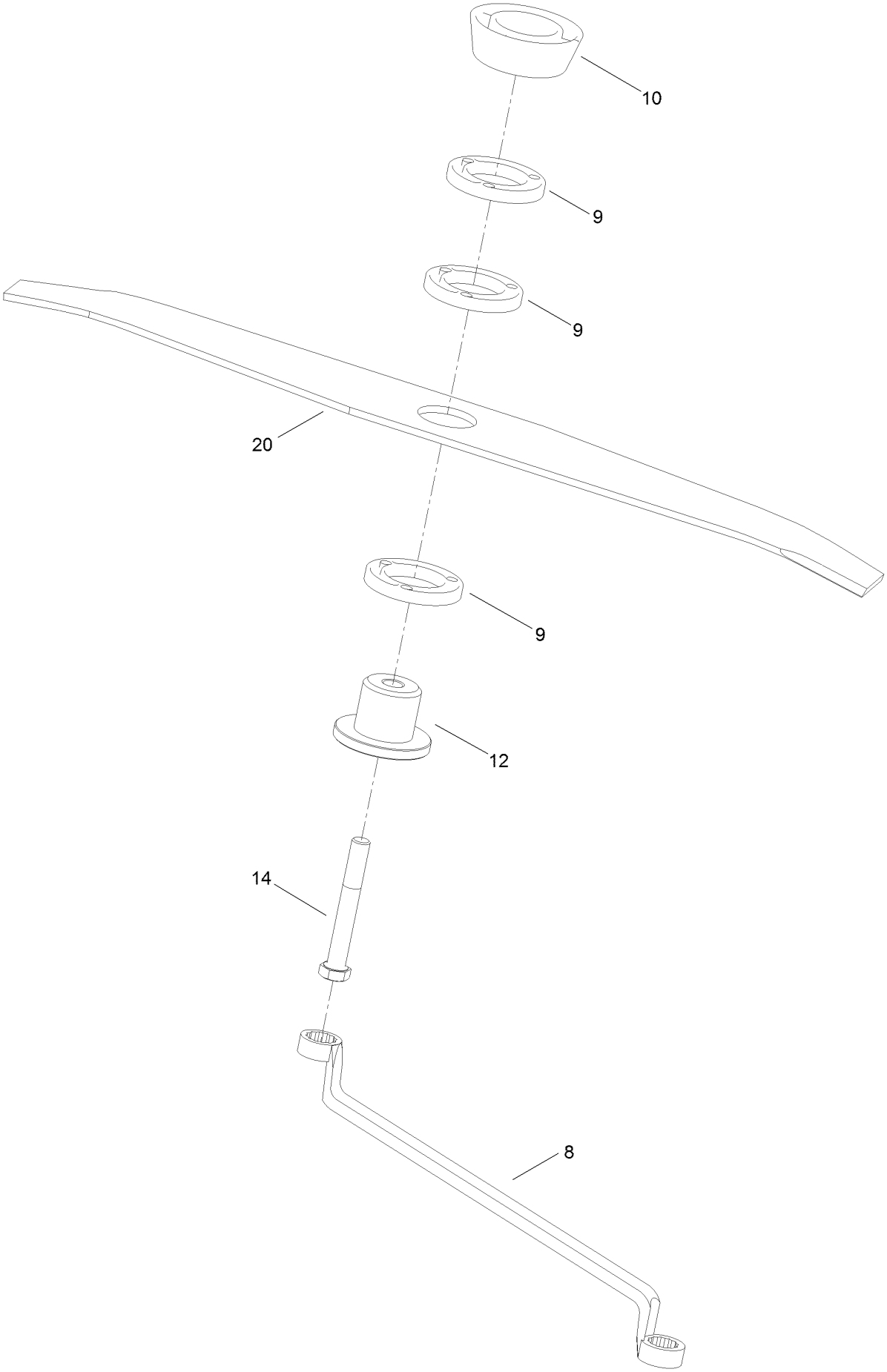

Cutting Assembly (continued)

Ref.	Part Number	Qty.	Description
8	H190210	1	Spanner
9	H192025	3	Spacer-Blade, Aluminium
10	H192270	1	Spacer-Distance
12	H192272	1	Retainer-Blade
14	H292018	1	Screw-Set
20	H292351	1	Blade (50 Cm)

Cylinder Barrel Assembly

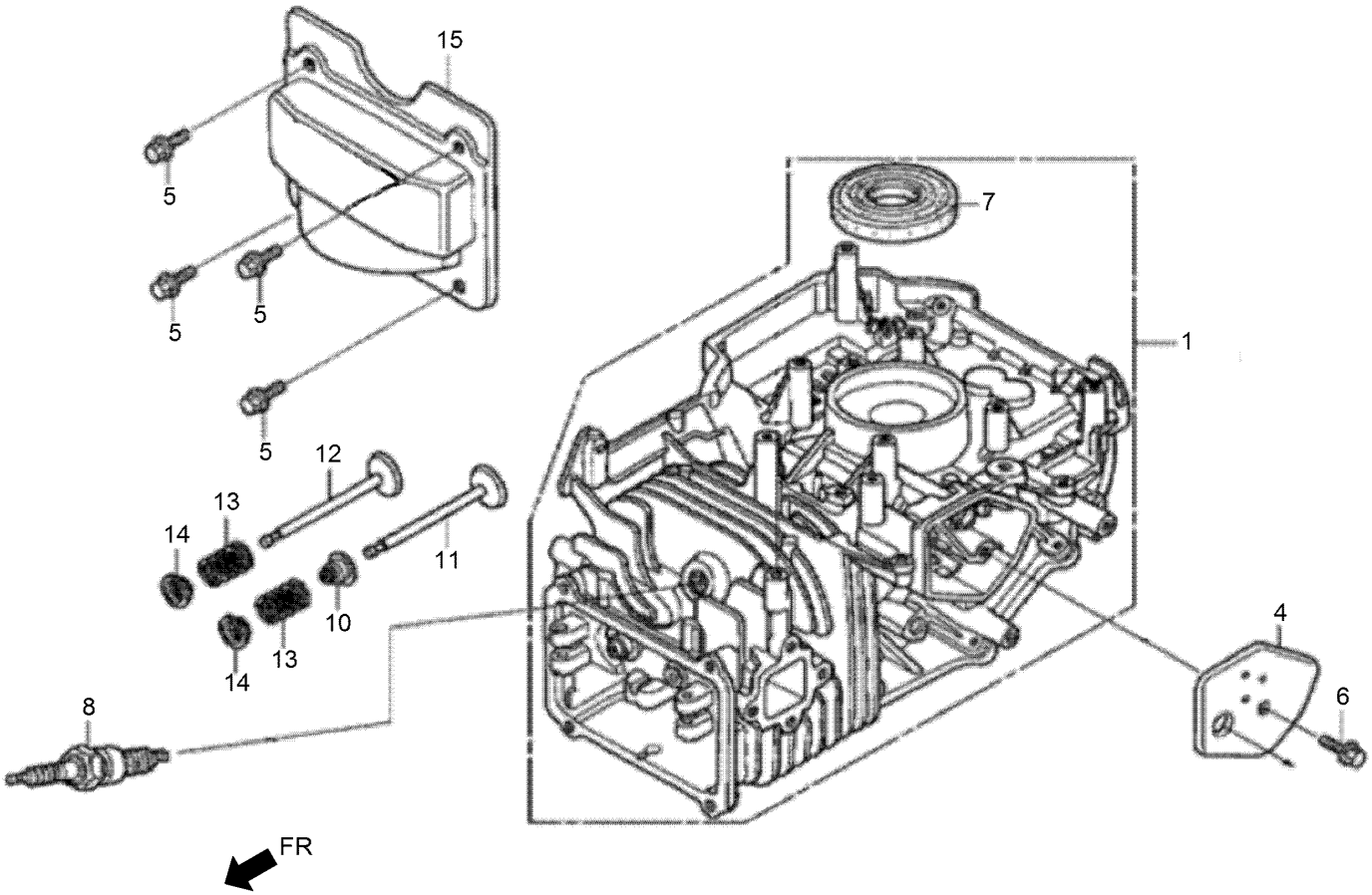

Cylinder Barrel Assembly (continued)

Ref.	Part Number	Qty.	Description
1	132-0115	1	Barrel ASM-Cylinder
4	132-0131	1	Breather Cover ASM
5	132-4880	4	Bolt-Flange-6X12
6	132-0595	1	Bolt-Flange-6X14
7	132-0655	1	Oil Seal-25.4X62X6
8	131-8231	1	Plug-Spark [ngk]
10	132-0121	1	Seal-Valve Stem
11	132-0193	1	Valve-Intake
11	132-0196	1	Valve-Intake
12	132-0199	1	Valve-Exhaust
12	132-0201	1	Valve-Exhaust
13	132-0207	2	Spring-Valve
14	132-0210	2	Retainer-Valve Spring
15	132-0128	1	Cover-Head

Oil Pan Assembly

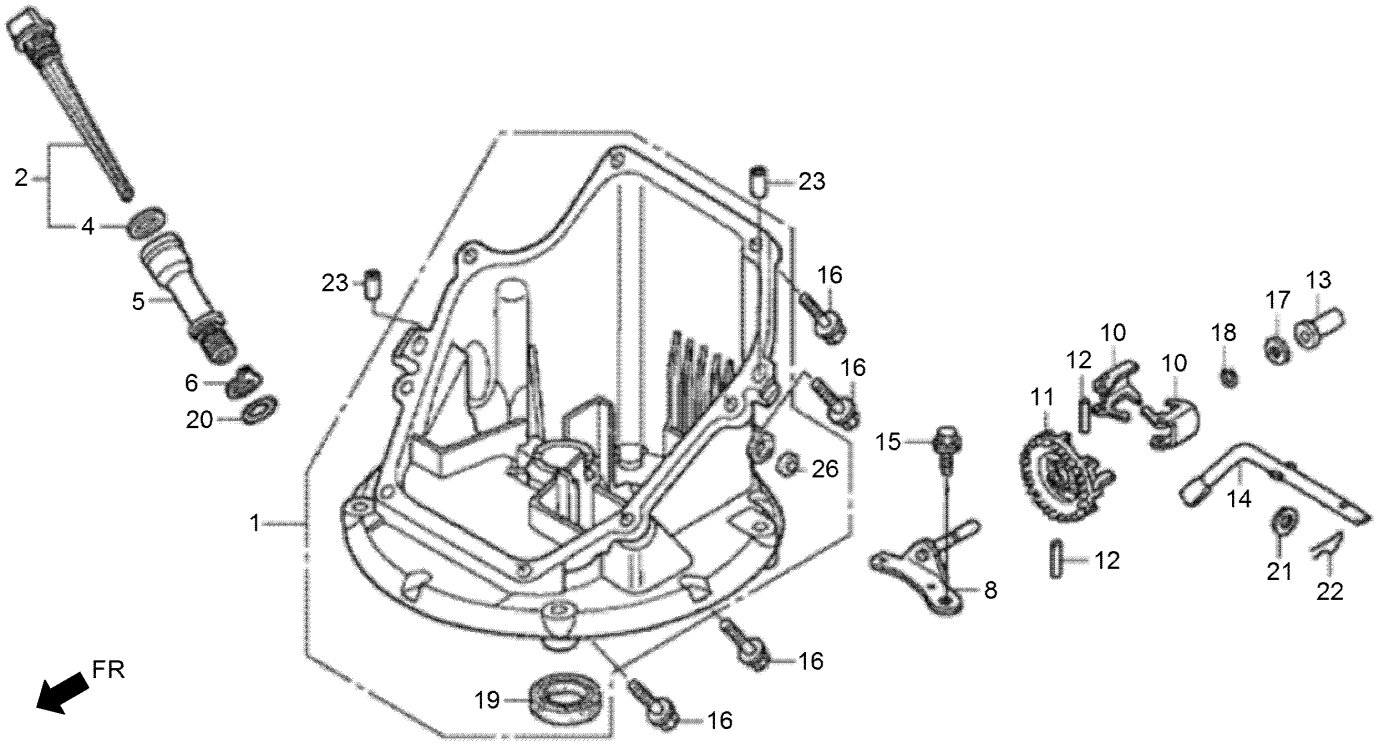

Oil Pan Assembly (continued)

Ref.	Part Number	Qty.	Description
1	132-0102	1	Pan ASM-Oil
2	132-0231	1	Gauge ASM-Oil Level
4	132-0226	1	Packing-Oil Filler Cap
5	132-0227	1	Extension-Oil Filler
6	132-0229	1	Washer-Extension Lock
8	132-0295	1	Governor Holder Shaft ASM
10	132-0299	2	Weight-Governor
11	132-0301	1	Holder-Governor Weight
12	132-0303	2	Pin-Governor Weight
13	132-0304	1	Slider-Governor
14	132-0306	1	Shaft-Governor Arm
15	132-0595	1	Bolt-Flange-6X14
16	132-0620	8	Bolt-Flange-6X25
17	132-0635	1	Washer-Thrust-6Mm
18	132-0642	1	Clip-Governor Holder
19	132-0660	1	Oil Seal-28X41.25X6
20	132-0665	1	O-Ring-14.8X2.4
21	132-0688	1	Washer-Plain-6Mm
22	132-0693	1	Pin-Lock-8Mm
23	132-0646	2	Dowel Pin-8X20
26	132-0661	1	Oil Seal-6X11X4

Crankshaft Assembly

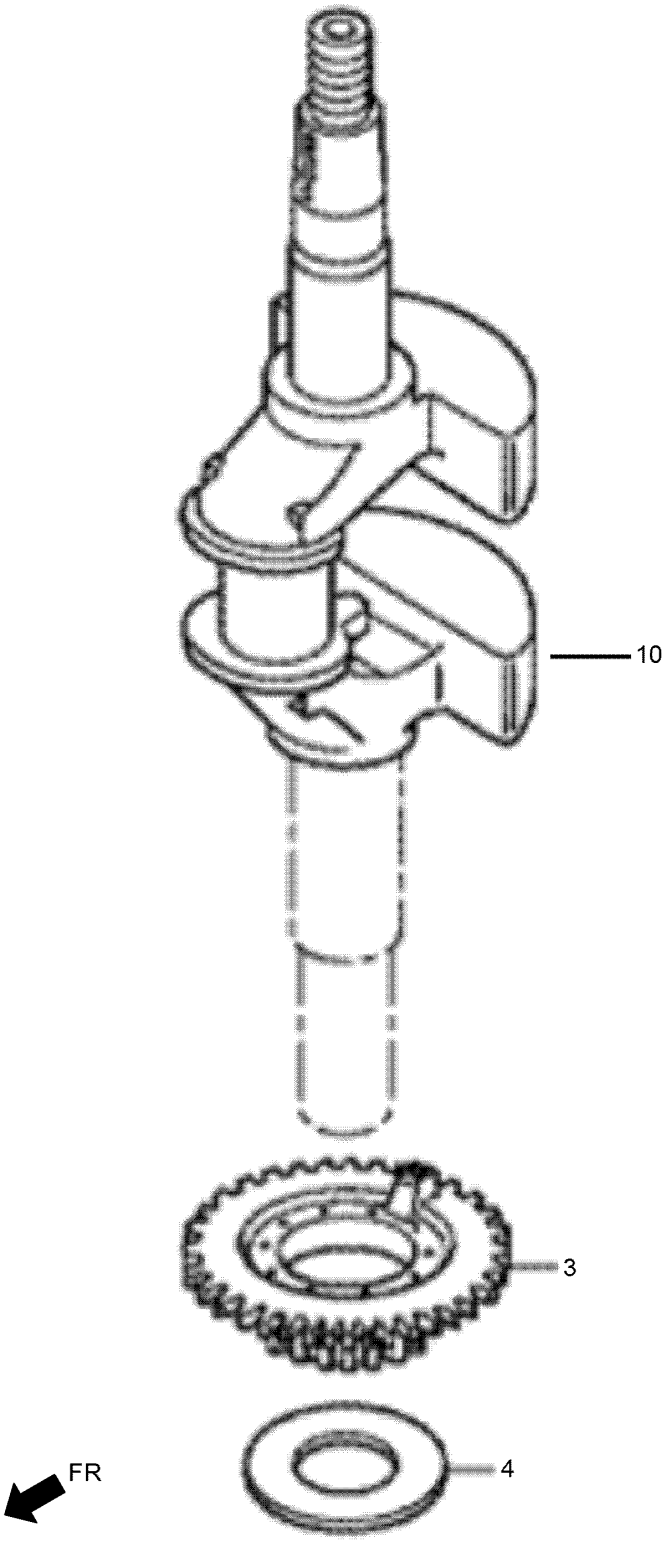

Crankshaft Assembly (continued)

Ref.	Part Number	Qty.	Description
3	132-0170	1	Pulley-Timing Belt Drive
4	132-0632	1	Washer-Thrust
10	132-0166	1	Crankshaft

Piston and Connecting Rod Assembly

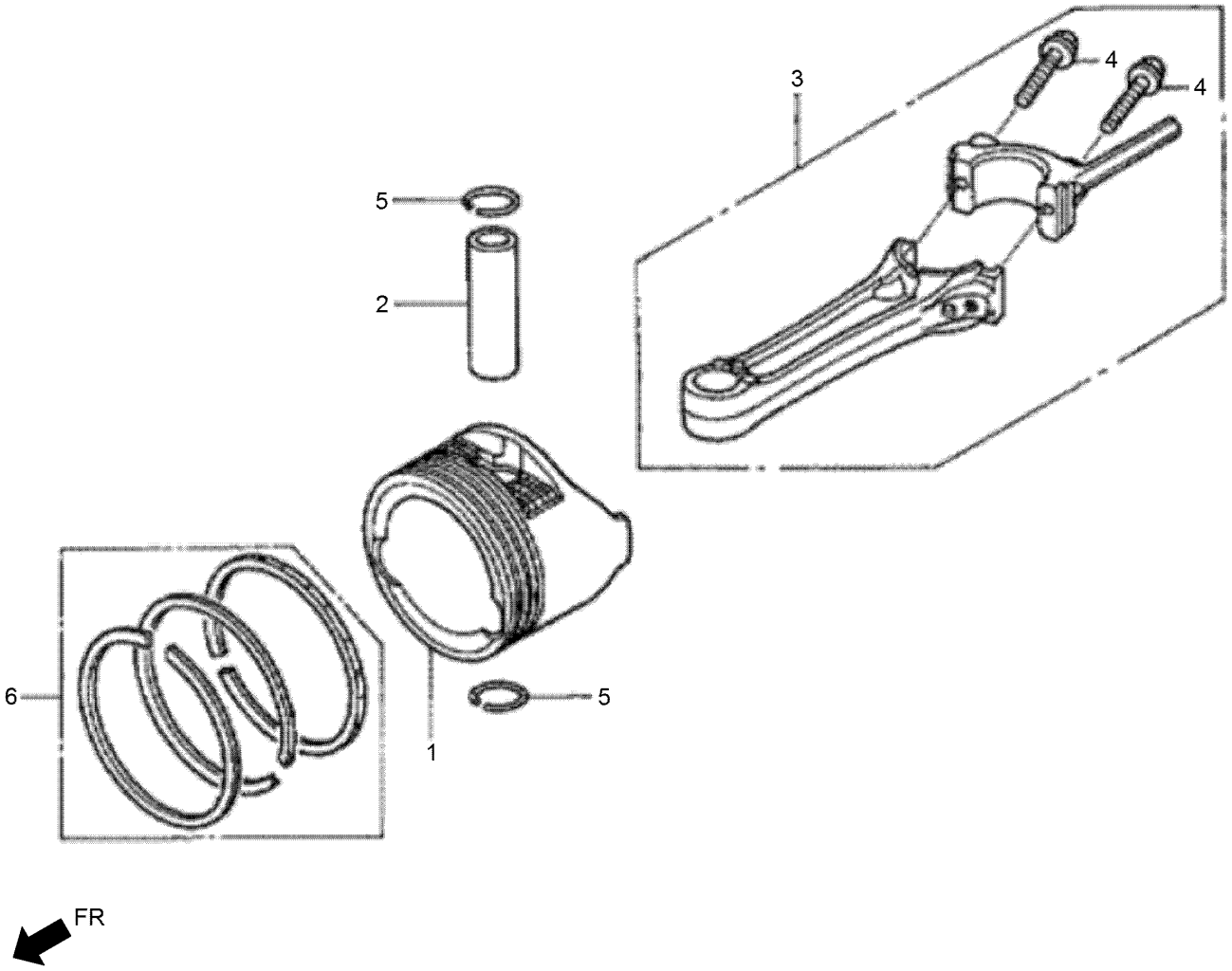

Piston and Connecting Rod Assembly (continued)

Ref.	Part Number	Qty.	Description
1	132-0145	1	Piston
2	132-0151	1	Pin-Piston
3	132-0154	1	Rod ASM-Connecting
4	132-0586	2	Bolt-Connecting Rod
5	132-0636	2	Clip-Piston Pin-13Mm
6	132-0136	1	Ring Set-Piston (STD)

Camshaft Pulley Assembly

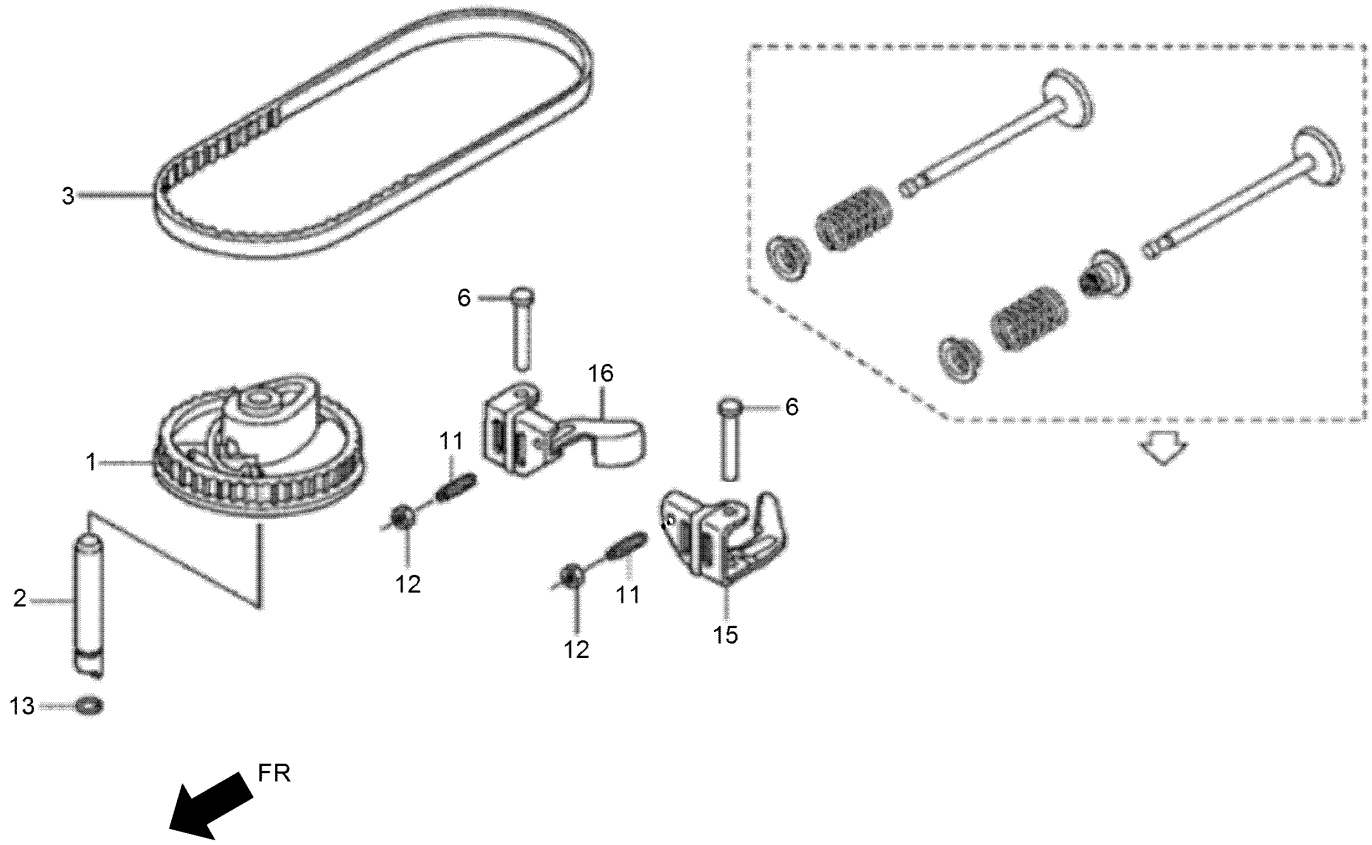

Camshaft Pulley Assembly (continued)

Ref.	Part Number	Qty.	Description
1	132-0174	1	Camshaft Pulley ASM
2	132-0176	1	Shaft-Cam Pulley
3	132-0178	1	Belt-Timing
6	132-0190	2	Shaft-Rocker Arm
11	132-0589	2	Screw-Tappet Adjusting
12	132-0627	2	Nut-Tappet Adjusting
13	132-0664	1	O-Ring-6.8X1.9
15	132-0183	1	Arm-Intake Valve Rocker
16	132-0187	1	Arm-Exhaust Valve Rocker

Recoil Starter Assembly

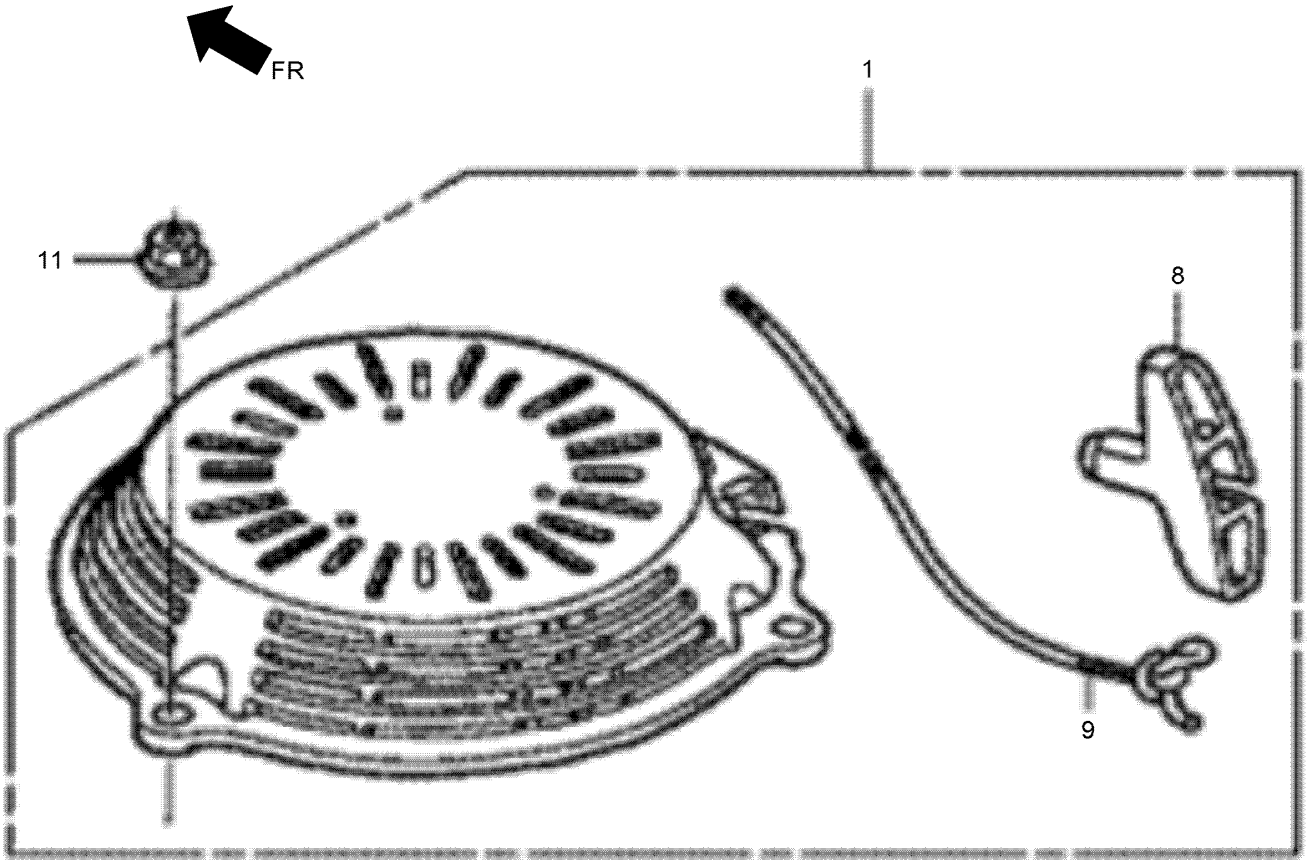

Recoil Starter Assembly (continued)

Ref.	Part Number	Qty.	Description
1	132-0479	1	Starter ASM-Recoil
8	132-0505	1	Grip-Starter
9	132-0508	1	Rope-Recoil Starter
11	132-0626	3	Nut-Flange-6Mm

Fuel Tank and Fuel Pump Assembly

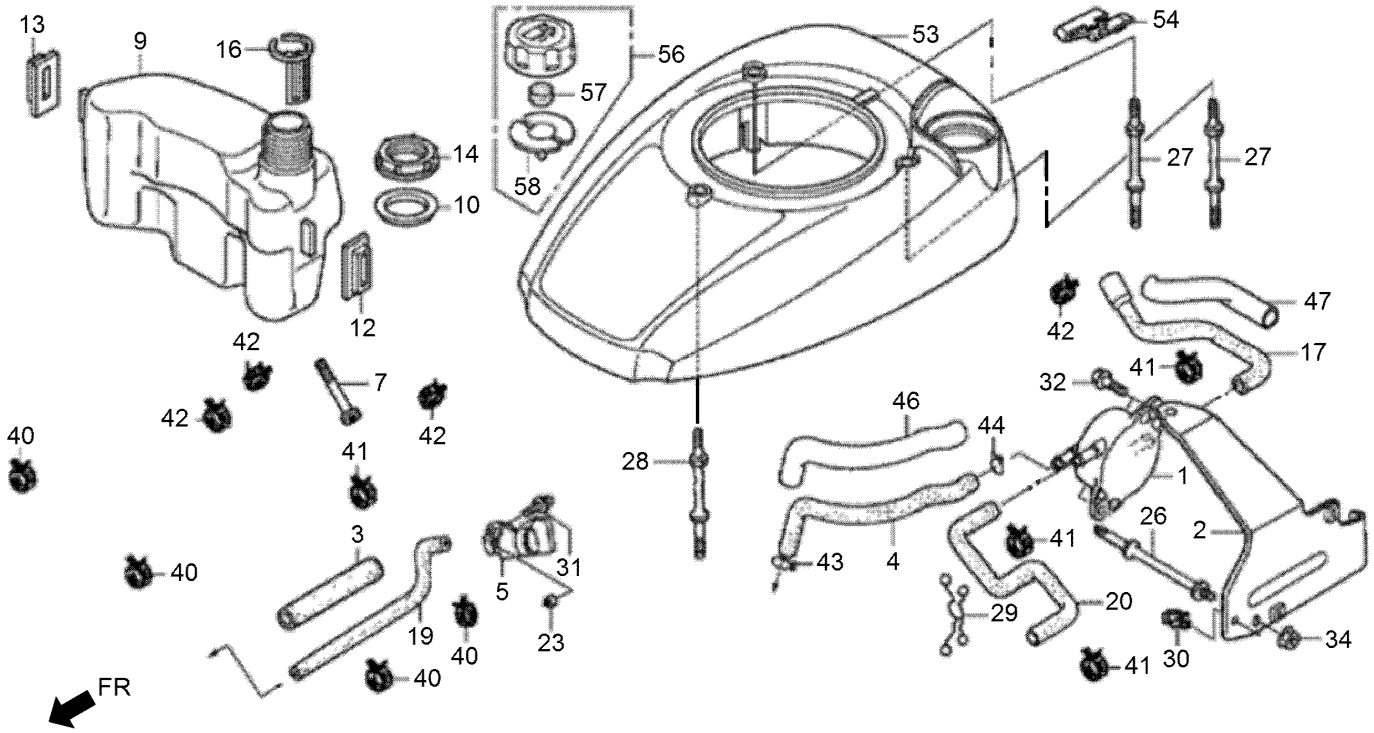

Fuel Tank and Fuel Pump Assembly (continued)

Ref.	Part Number	Qty.	Description
1	132-0346	1	Pump ASM-Fuel
2	132-0347	1	Stay-Fuel Pump
3	132-0349	1	Rubber-Supporter
4	132-0352	1	Tube-Diaphragm
5	132-0355	1	Cock ASM-Fuel
7	132-0356	1	Strainer-Fuel
9	132-0401	1	Tank-Fuel
10	132-0402	1	Seal-Fuel Filler Neck
12	132-0406	1	Rubber A-Tank Mounting
13	132-0408	1	Rubber B-Tank Mounting
14	132-0409	1	Nut-Tank Mounting
16	132-0432	1	Gauge-Fuel Level
17	132-0436	1	Tube-Fuel Tank
19	132-0438	1	Tube-Fuel
20	132-0444	1	Tube B-Fuel
23	132-0670	1	Collar-Fuel Cock
26	132-0607	1	Bolt-Stud
27	132-0611	2	Bolt-Stud
28	132-0611	1	Bolt-Stud
29	132-0639	1	Clip-Purse Lock
30	132-0644	1	Clip-Wire Harness
31	132-0681	1	Screw-Washer-5X10
32	132-0683	2	Screw-Washer-5X14
34	132-4881	1	Nut-Flange-6Mm
40	131-8211	2	Clamp-Tube
41	131-8212	3	Clamp-Tube
42	131-8213	1	Clamp-Tube
43	131-8214	1	Clip-Tube
44	131-8215	1	Clip-Tube
46	131-8217	1	Tube-Vinyl-9X11X210
47	131-8219	1	Tube-Vinyl-13X15X90
53	132-0470	1	Cover-Fan (Nh1)
54	132-0404	1	Clip-Tank Mounting (Nh1)
56	132-0411	1	Cap ASM-Fuel Tank
57	132-0420	1	Sponge-Fuel Cap Breather
58	132-0423	1	Packing-Fuel Cap

Carburetor Assembly

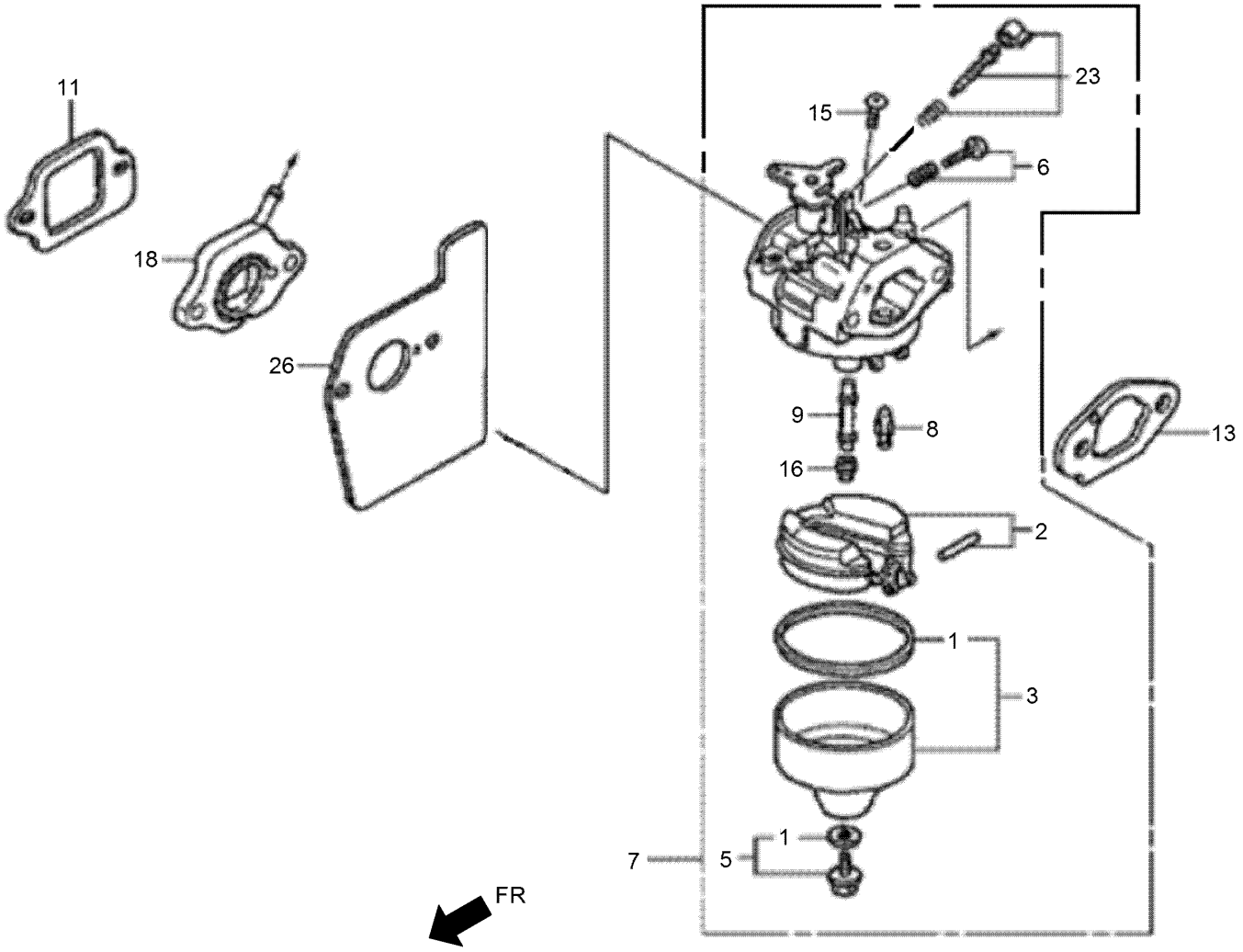

Carburetor Assembly (continued)

Ref.	Part Number	Qty.	Description
1	132-0238	1	Packing Set
2	132-0244	1	Float Set
3	132-0246	1	Chamber Set-Float
5	132-0254	1	Screw Set
6	132-0256	1	Screw Set
7	132-0267	1	Carburetor ASM (Bb65V A)
8	132-0270	1	Valve-Float
9	132-0271	1	Nozzle-Main (Bb65V A)

Ref.	Part Number	Qty.	Description
11	132-0282	1	Packing-Insulator
13	132-0289	1	Packing-Carburetor
15	132-0677	1	Screw-Pan-5X6
16	131-8234	1	Jet-Main No. 62
16	131-8235	1	Jet-Main No. 65
18	132-0279	1	Insulator-Carburetor
23	132-0249	1	Screw Set
26	132-0476	1	Guide-Air

Air Cleaner Assembly

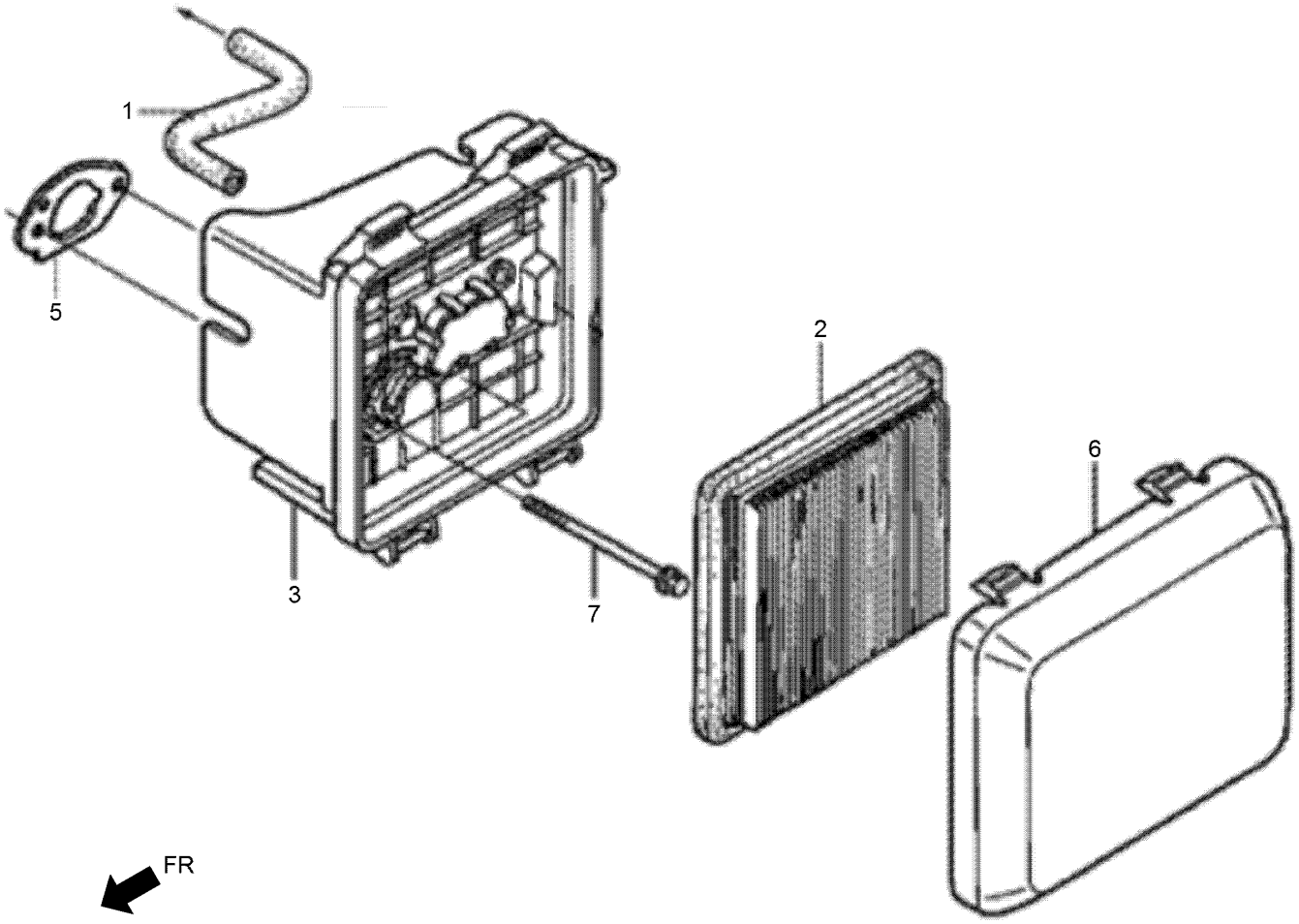

Air Cleaner Assembly (continued)

Ref.	Part Number	Qty.	Description
1	132-0235	1	Tube-Breather
2	132-0369	1	Element-Air Cleaner
3	132-0373	1	Case ASM-Air Cleaner
5	132-0380	1	Packing-Air Cleaner
6	132-0386	1	Cover-Air Cleaner
7	132-0578	2	Bolt-Special-6Mm

Muffler Assembly

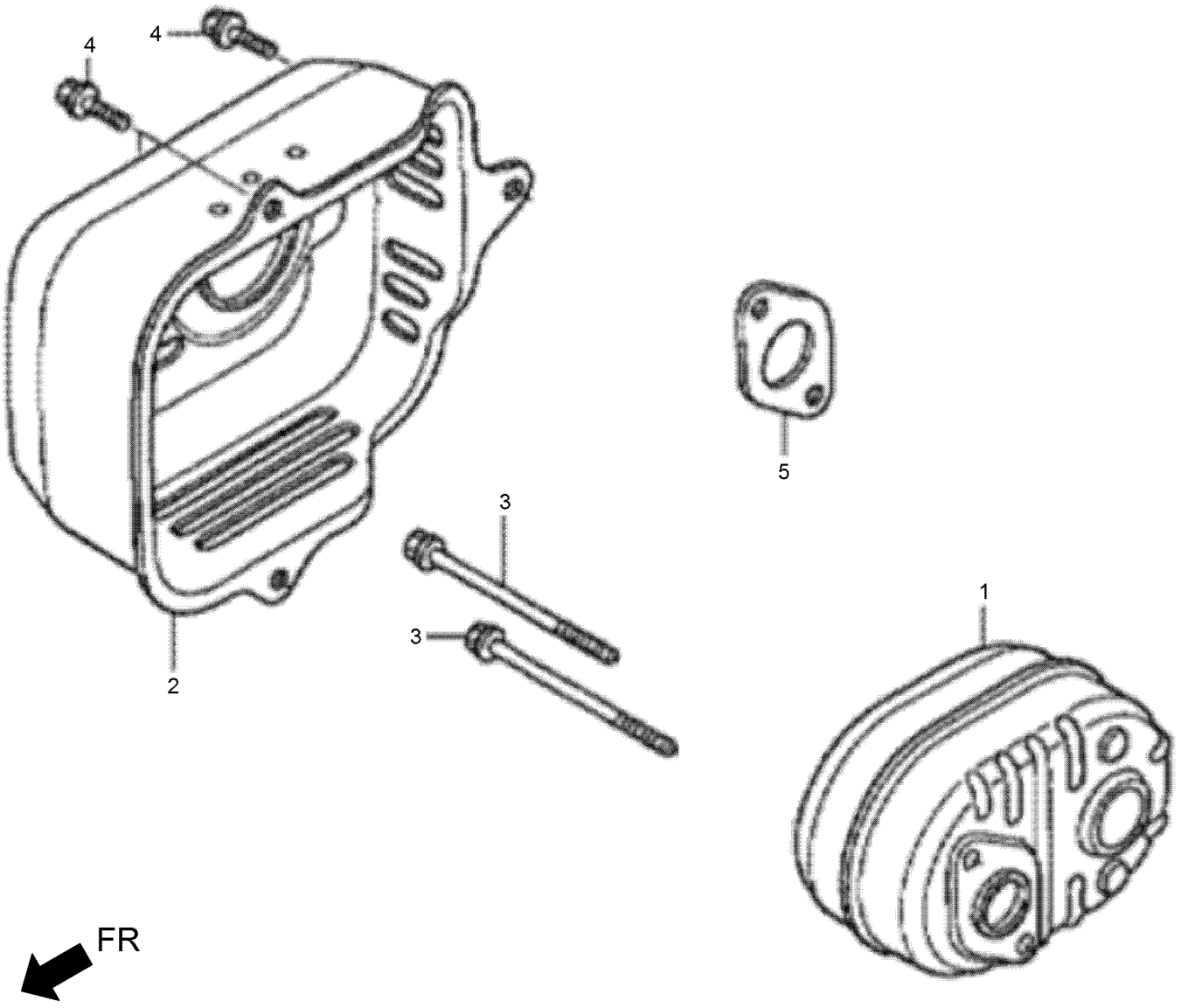

Muffler Assembly (continued)

Ref.	Part Number	Qty.	Description
1	132-0449	1	Muffler ASM
2	132-0452	1	Muffler Protector ASM
3	132-0584	2	Bolt-Flange-6X79
4	132-4880	3	Bolt-Flange-6X12
5	132-0458	1	Gasket-Muffler

Flywheel and Ignition Coil Assembly

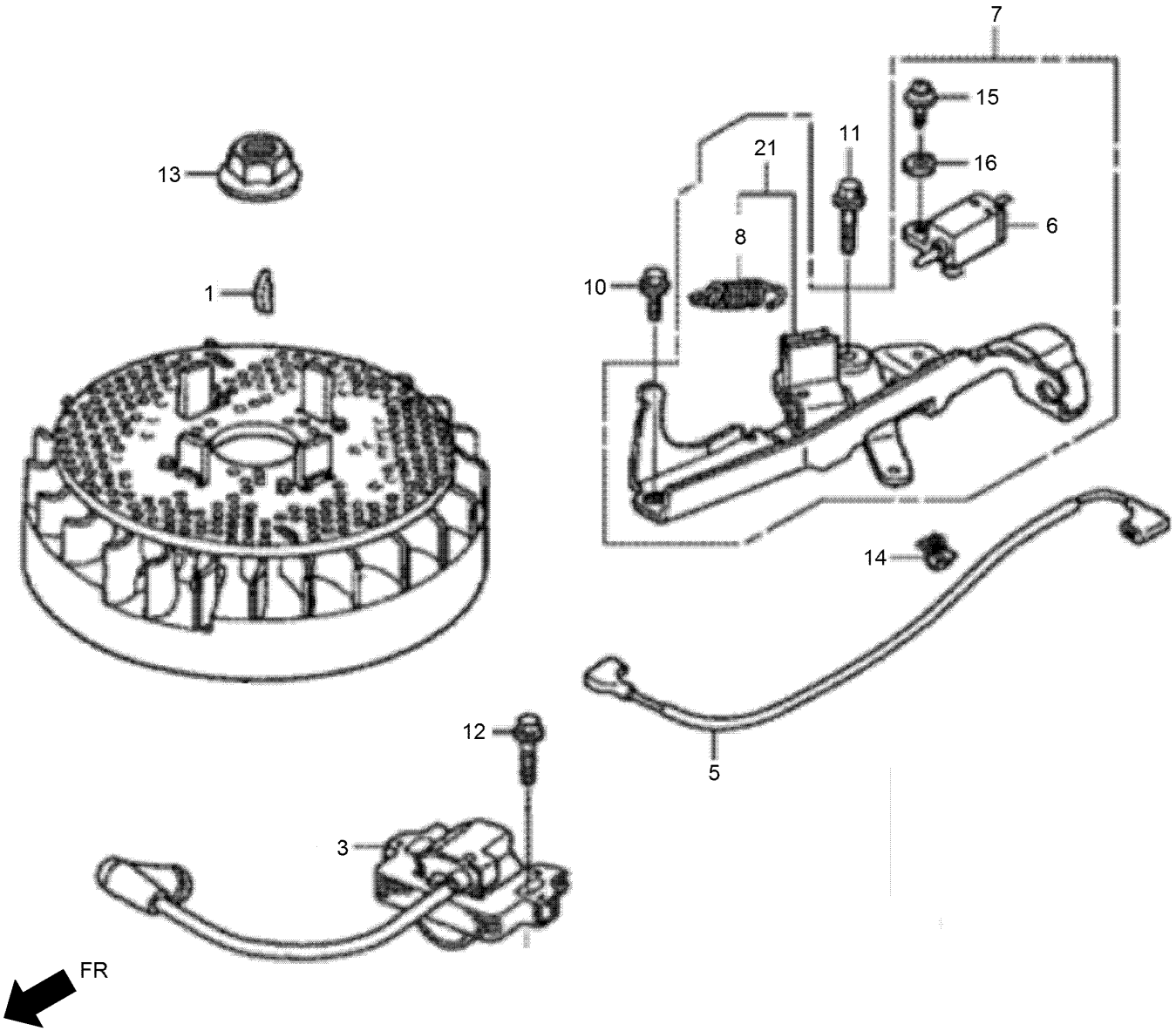

Flywheel and Ignition Coil Assembly (continued)

Ref.	Part Number	Qty.	Description
1	132-0168	1	Key-Special Woodruff-25X18
3	132-0512	1	Coil ASM-Ignition
5	132-0524	1	Cord-Stop Switch
6	132-0531	1	Switch ASM-Engine Stop
7	132-0534	1	Brake ASM
8	132-0538	1	Spring-Brake Lever
10	132-0595	1	Bolt-Flange-6X14
11	132-0603	1	Bolt-Flange-6X23
12	132-0603	1	Bolt-Flange-6X23
13	132-0625	1	Nut-Special-14Mm
14	132-0645	1	Clip A-Cable
15	132-0682	1	Screw-Washer-4X12
16	132-0689	1	Washer-Plain-4Mm
21	132-0537	1	Brake Sub ASM

Control Assembly

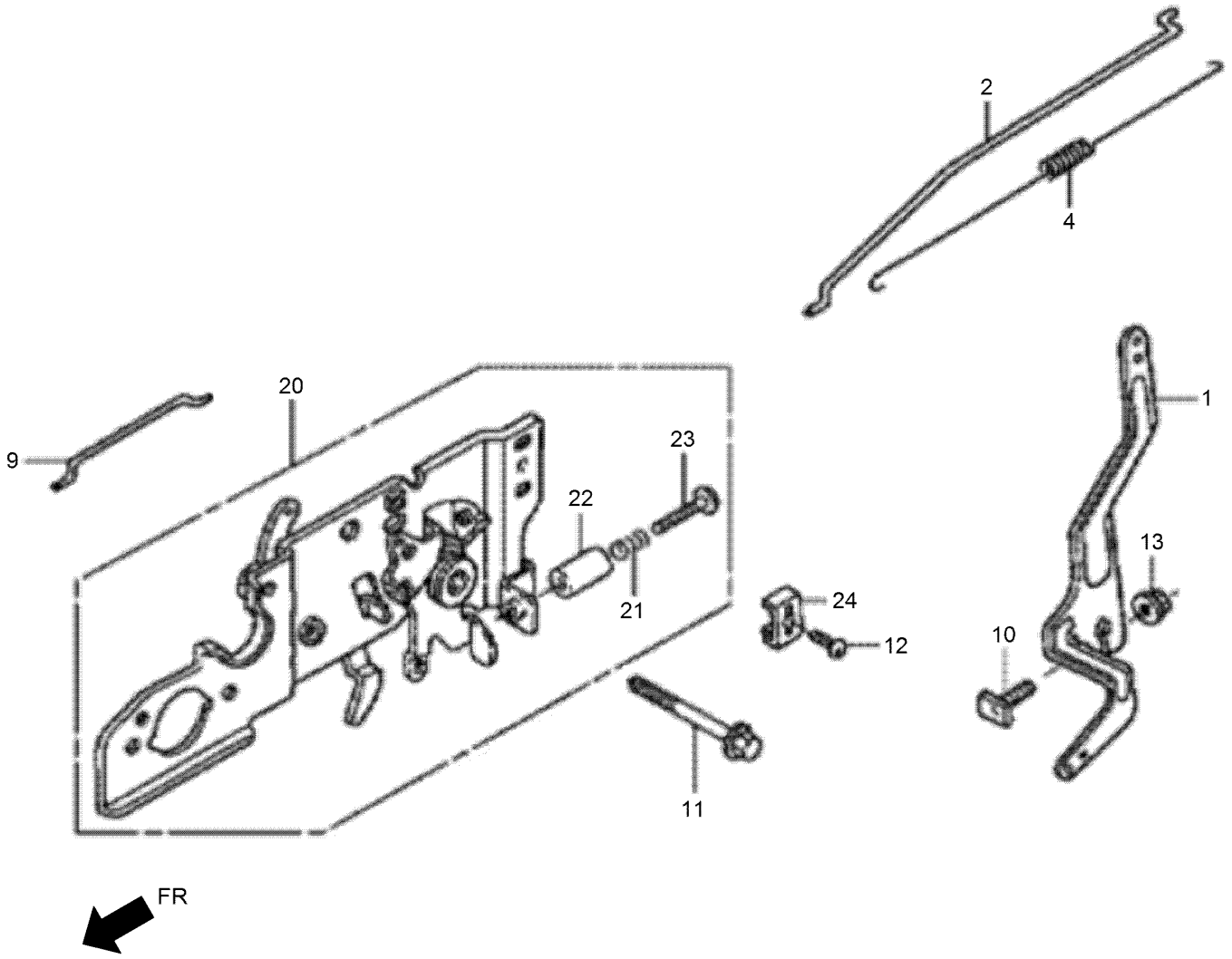

Control Assembly (continued)

Ref.	Part Number	Qty.	Description
1	132-0312	1	Arm-Governor
2	132-0315	1	Rod-Governor
4	132-0325	1	Spring-Throttle Return
9	132-0345	1	Rod-Choke
10	132-0598	1	Bolt-Governor Arm
11	132-0594	1	Bolt-Flange-6X50
12	132-0678	1	Screw-Pan-5X16
13	132-4881	1	Nut-Flange-6Mm
20	132-0333	1	Control Base ASM
21	132-0340	1	Spring-Control Adjusting
22	132-0342	1	Collar-Stopper
23	132-0601	1	Screw-Recessed-5X28
24	132-0344	1	Holder-Cable

Label Assembly

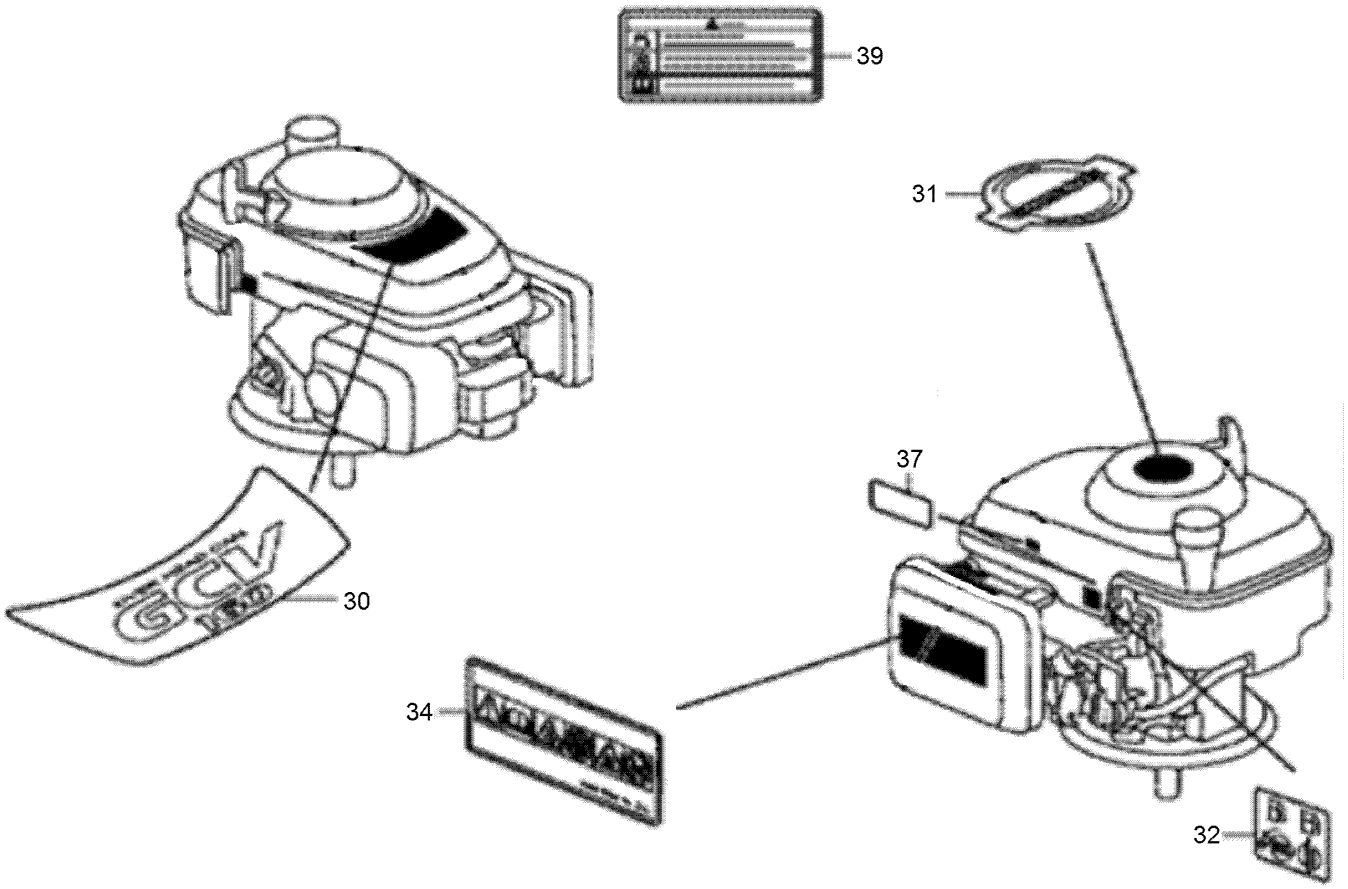

Label Assembly (continued)

Ref.	Part Number	Qty.	Description
30	132-0543	1	Mark-Emblem
31	132-0548	1	Mark-Recoil Cover
32	132-0565	1	Mark-Fuel Cock Caution
34	132-4879	1	Mark-Operator Caution
37	132-0546	1	Label-Warning
39	132-0554	1	Mark-Operator Caution (China)

Attachments and Accessories

For 02604 HoverPro 500 Machine

Product Name	Model/Part
Transport Wheel Kit	02622
Handlebar Extension Kit	02623

Notes:

Notes:

Notes:

TORO®

Count on it.