Form No. 3424-736 Rev A

TORO®

Count on it.

Parts Catalog

Z Master® Professional 6000 Series Riding Mower

with 132cm TURBO FORCE® Side Discharge Mower

Model No. 74919TE—Serial No. 403227085 and Up

Register at www.Toro.com.
Original Instructions (EN)

CE

3424-736 A

Ordering Replacement Parts

To order replacement parts, please supply the part number, the quantity, and the description of each part desired.

Understanding Reference Numbers

Each identified part in an illustration has a reference number. The reference number for a part also appears in the parts list, along with other information about the part.

This catalog uses two special reference number formats, one to indicate parts in a service assembly and another to indicate the quantity of a given part in an illustration.

Service Assembly Reference Numbers

Parts in service assemblies have reference numbers in the form a:b. The a represents the reference number of the entire service assembly and the b represents a sequential number unique to each part within the service assembly.

For example, a wheel assembly might be identified by reference number 6, the tire by 6:1, the valve by 6:2, and the wheel by 6:3. When you order the assembly identified by reference number 6, you receive all parts identified by reference numbers 6:1,6:2, and 6:3. However, you may also order any part individually. Reference numbers of this type appear in illustration and in parts lists.

Reference Numbers Indicating Quantity

In an illustration, if a reference number indicates more than one part, the reference number has the form nX y. The n represents the quantity of the part, the X is the multiplication symbol, and the y represents the reference number.

For example, in an illustration, the reference number 2X 37 means that two of the parts identified by reference number 37 are indicated.

Contents

Frame, Caster and Z Stand Assembly 4
Z Stand Assembly 6
Caster Wheel and Fork Assembly 8
Hydraulic Pump, Idler and Belt Assembly 10
Pump Idler Assembly No. 116-1255 12
LH Hydro Assembly No. 126-1321 14
RH Hydro Assembly No. 126-1322 16
Rear Wheel Assembly 18
Park Brake Assembly 20
Fuel System Assembly 22
Fuel Tank Assembly No. 135-0643 24
Seat Mounting Assembly 26
Seat Assembly No. 125-3107 28
Motion Control Assembly 30
Console Assembly 32
RH Console Assembly No. 115-7402 34
LH Console Assembly No. 115-7403 36
Electrical Assembly 38
Deck Lift Assembly 40
Height-of-Cut Assembly No. 117-3842 42
Engine, Clutch and Muffler Assembly 44
Deck Assembly 46
Deck Decal Assembly No. 136-8627 48
Idler Arm Assembly 50
Spindle Assembly No. 127-0560 52
Rubber Deflector Assembly No. 108-2792 54
Frame Decal Assembly 56
Attachments and Accessories 58

© 2018—The Toro® Company
8111 Lyndale Avenue South
Bloomington, MN 55420

Contact us at www.Toro.com.
Printed in the USA.
All Rights Reserved

Frame, Caster and Z Stand Assembly

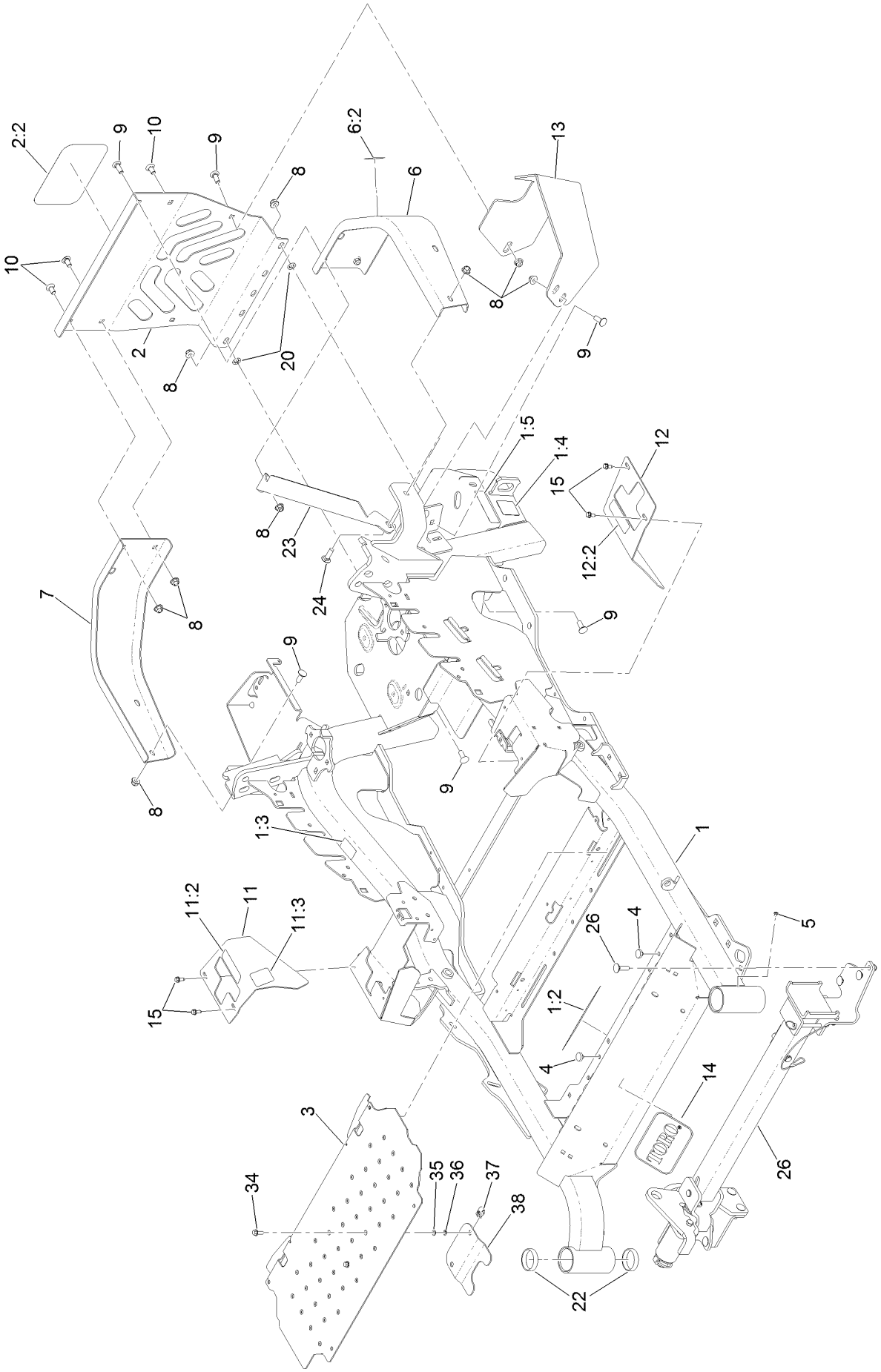

Frame, Caster and Z Stand Assembly (continued)

Ref.	Part Number	Qty.	Description
1	116-5900	1	Mainframe ASM
1:2	132-0871	1	Decal-Danger
1:3	106-5517	2	Decal-Warning
1:4	106-2655	2	Decal-Hazard, Pinched Finger
1:5	133-8062	1	Decal-Arrestor, Spark
2	115-7410	1	Rear Guard ASM
2:2	67-7320	1	Decal
3	116-8898-01	1	Floorpan
4	1-513658	2	Bumper
5	1-811010	2	Plug
6	116-0180	1	LH Bumper ASM
6:2	106-5517	1	Decal-Warning
7	116-0057-03	1	Bumper-RH
8	104-8301	11	Nut-HF, NI
9	3231-22	7	Screw-CARR
10	3231-21	3	Screw-CARR
11	116-5899	1	RH Motion Control Cover ASM
11:2	99-8936	1	Decal-Control, Motion
11:3	116-5988	1	Decal-Park Brake, CE
12	116-0580	1	LH Motion Control Cover ASM
12:2	99-8936	1	Decal-Control, Motion
13	117-0908-03	1	Guard-Muffler
14	68-3640	1	Decal
15	32144-10	4	Screw-HWH
20	107-3154	2	Nut-Push
22	1-543508	4	Cup-Bearing
23	127-0324-03	1	Strap
24	3231-25	1	Bolt-CARR
26		1	Z Stand ASM ●
34	3234-4	2	Screw-HHF
35	3256-60	2	Washer-Flat
36	106-8737	2	Nut-Retainer
37	107069	2	Clip
38	119-0395-03	1	Adapter-Captive

● Not serviced separately

Z Stand Assembly

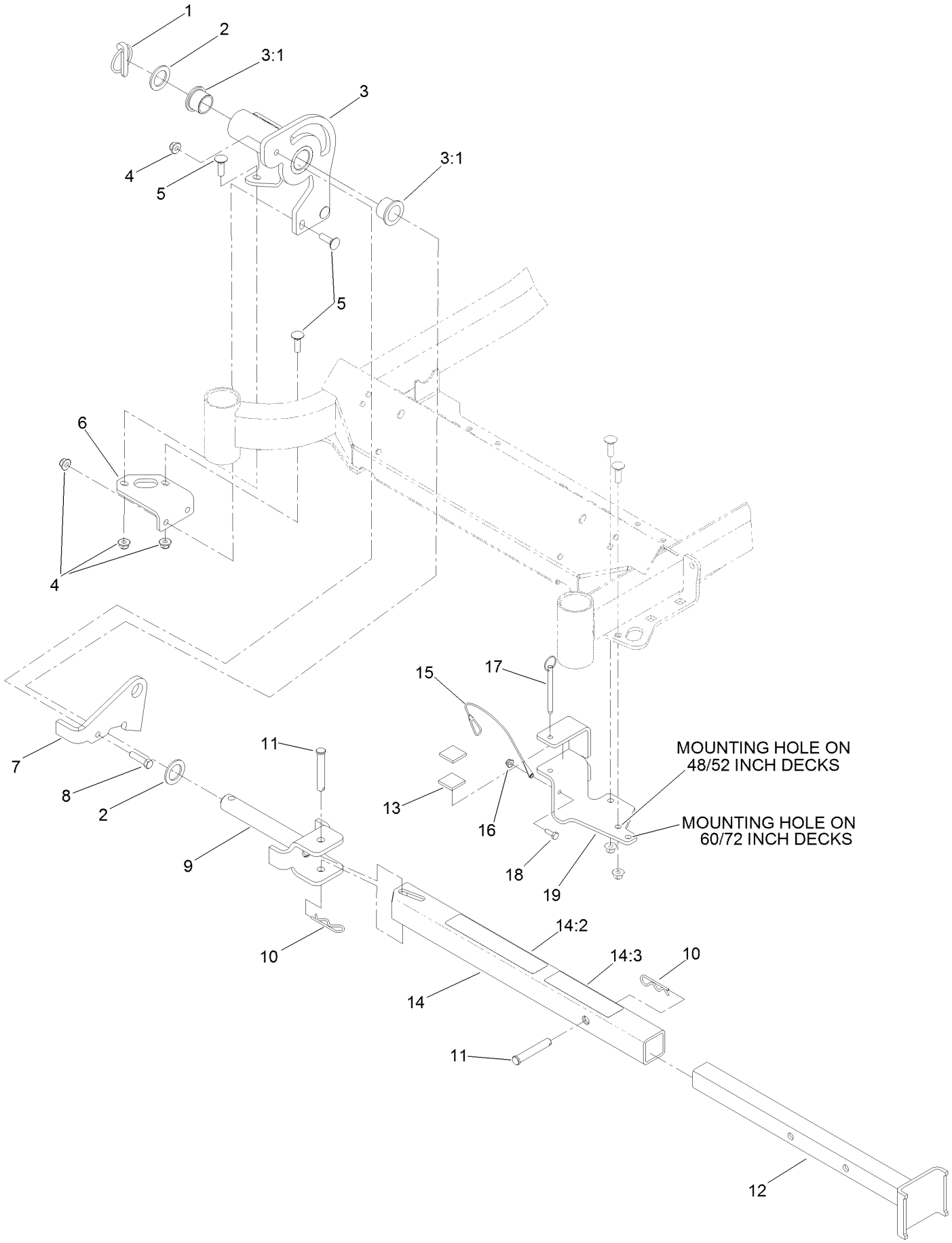

Z Stand Assembly (continued)

Ref.	Part Number	Qty.	Description
1	283-71	1	Pin-Lynch
2	3-6781	2	Washer-Thrust
3	136-1669	1	Pivot Plate ASM
3:1	94-1291	2	Bushing
4	104-8301	8	Nut-HF, NI
5	3231-25	7	Bolt-CARR
6	115-3619-01	1	Bracket-Mount, Pivot
7	136-1657-01	1	Plate-Latch
8	323-8	1	Screw-HH
9	100-9692-01	1	Pin-Pivot
10	3290-355	2	Pin-Hair
11	283-55	2	Pin-Clevis
12	115-3631-01	1	Tube-Inner
13	115-3613	2	Cushion-Rubber
14	115-3634	1	Outer Tube ASM
14:2	106-7464	1	Decal-Z Stand
14:3	107-3969	1	Decal-Warning
15	100-9385	1	Lanyard-Nylon
16	104-7201	1	Nut-HF
17	105-1647	1	Pin-Hitch, Cotterless
18	321-4	1	Screw-HH
19	115-3625-01	1	Cradle-Z Stand

Caster Wheel and Fork Assembly

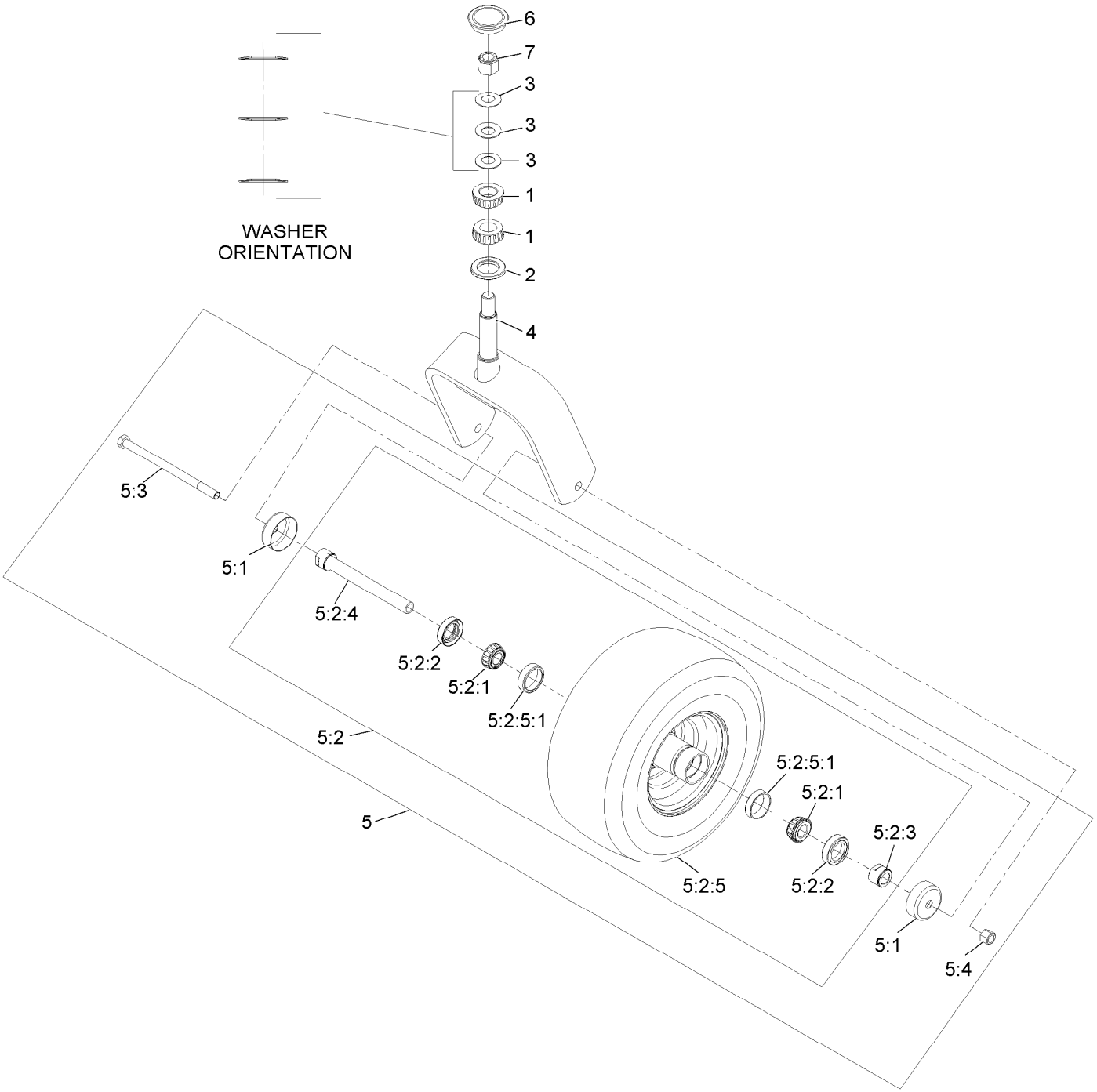

Caster Wheel and Fork Assembly (continued)

Ref.	Part Number	Qty.	Description
1	1-543509	2	Bearing-Roller, Tapered
2	116-5647	1	Seal-Grease
3	1-633508	3	Washer-Bellville
4	116-6707-01	1	Caster
5	109-9127	1	Wheel & Tire ASM
5:1	103-2768	2	Guard-Seal
5:2		1	Wheel And Tire ASM ●
5:2:1	1-633585	2	Bearing-Cone, Taper
5:2:2	103-0063	2	Seal-Caster
5:2:3	103-3051	1	Spacer-Nut ■
5:2:4	126-5361	1	Axle Caster ASM
5:2:5		1	Wheel And Tire ASM ●
5:2:5:1	1-633584	2	Bearing-Cup
5:3	325-39	1	Screw-HH
5:4	3296-23	1	Nut-Lock, NI
6	103-4882	1	Cap-Grease
7	3296-51	1	Nut-Lock, NI

● Not serviced separately
■ Use Pro-Lock, Nut Type (P/N 1-840022, .5ml tube) on threads.

Hydraulic Pump, Idler and Belt Assembly

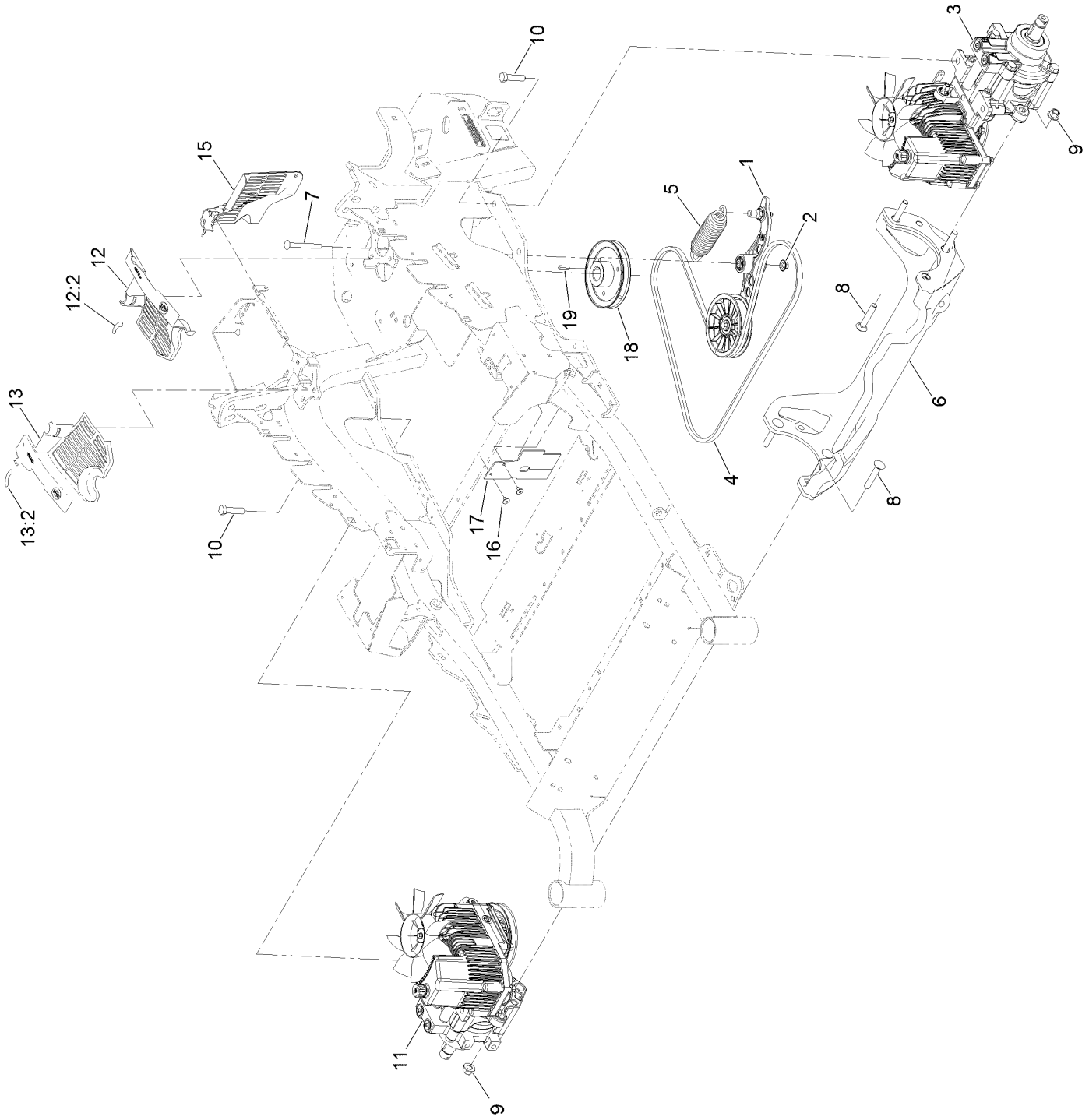

Hydraulic Pump, Idler and Belt Assembly (continued)

Ref.	Part Number	Qty.	Description
1	116-1255	1	Pump Idler ASM
2	109-6658	1	Nut-Flange, NI
3	126-1321	1	LH Hydro ASM (12Cc W/ Check)
4	109-3388	1	Belt
5	116-6317	1	Spring-Extension
6	116-7558	1	Cradle-Hydro
7	116-1502	1	Bolt-Shoulder, Carriage
8	126-0095	6	Screw-CARR
9	99-5107	6	Nut-Lock
10	325-8	4	Screw-HH
11	126-1322	1	RH Hydro ASM (12Cc W/ Check)
12	116-0170	1	LH Hydro Guard ASM
12:2	116-8726	1	Decal-Oil, Hydro
13	116-0171	1	RH Hydro Guard ASM
13:2	116-8726	1	Decal-Oil, Hydro
15	109-9058	1	Guard-Hydro, Rear (RH)
16	1-803035	2	Rivet-Pop
17	116-2362	1	Deflector-Air Flow
18	109-9905	1	Sheave
19	1-807259	1	Key
99	114-4713	1	Hypr-Oil 500 (Quart) ●
99	114-4714	1	Hypr-Oil 500 (Gallon) ●
99	114-4715	1	Hypr-Oil 500-5 (5 Gallon) ●
99	117-0390	1	Filter-Hydro ●

● Not illustrated

Pump Idler Assembly No. 116-1255

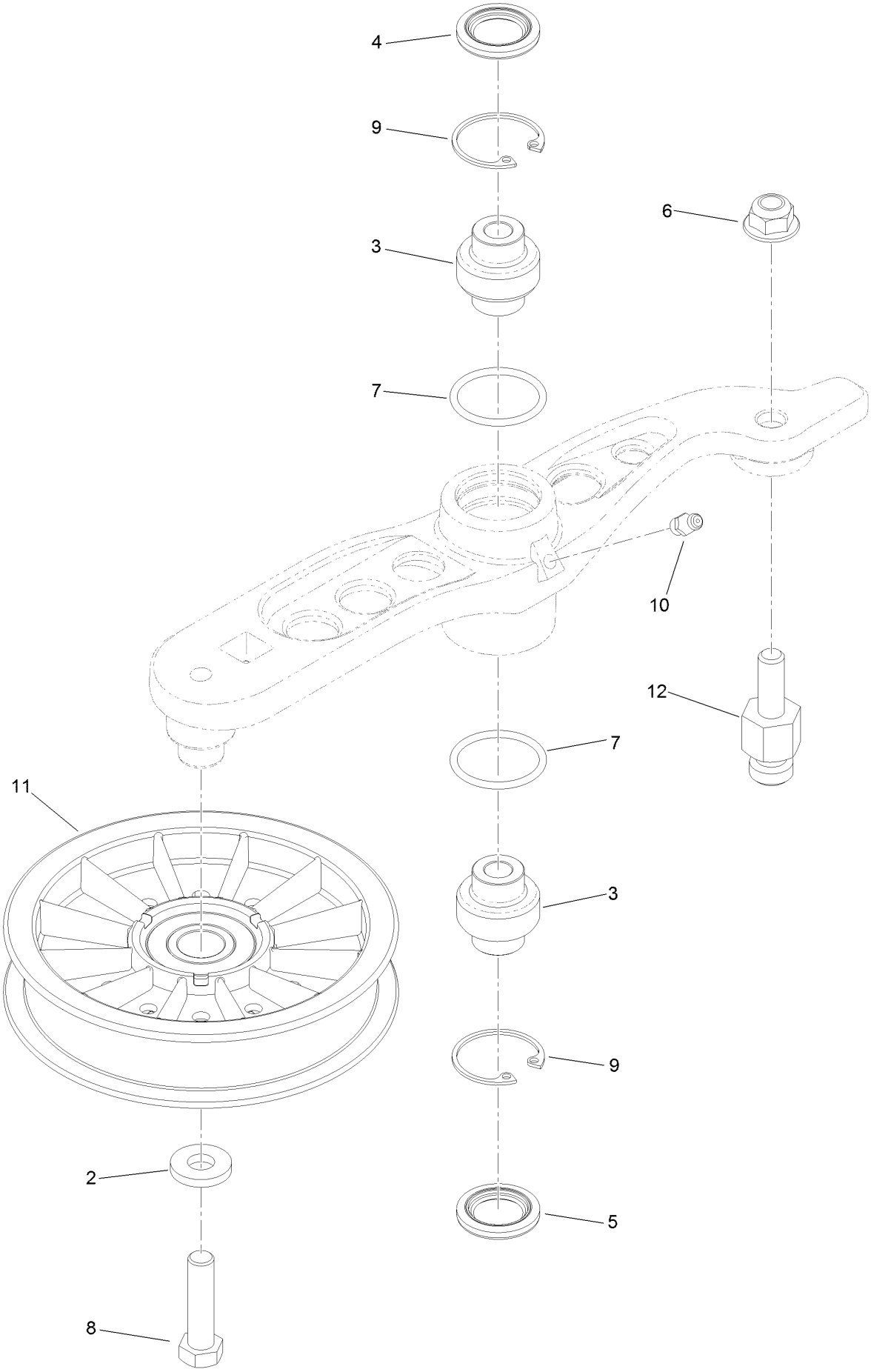

Pump Idler Assembly No. 116-1255 (continued)

Ref.	Part Number	Qty.	Description
2	43-0940	1	Spacer
3	103-3504	2	Bearing-Spherical
4	103-3505	1	Seal-Lip, Double
5	103-3506	1	Seal-Lip, Single
6	109-6658	1	Nut-Flange, NI
7	106-7159	2	O-Ring
8	323-8	1	Screw-HH
9	32120-10	2	Ring-Snap
10	302-19	1	Fitting-Grease
11	109-8076	1	Pulley-Idler
12	132-4724	1	Pin-Anchor, Spring

LH Hydro Assembly No. 126-1321

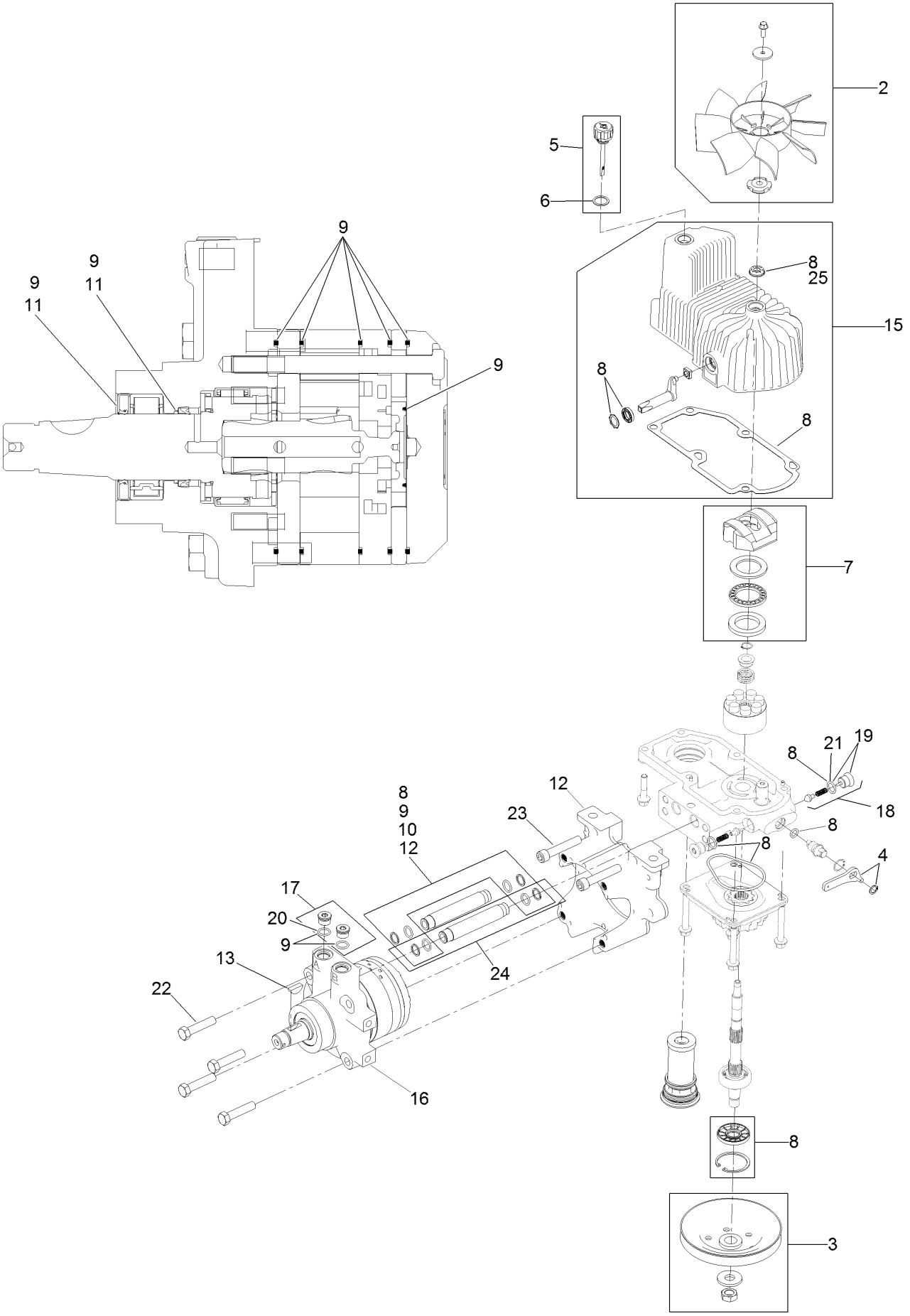

LH Hydro Assembly No. 126-1321 (continued)

Ref.	Part Number	Qty.	Description
2	116-0233	1	Fan Kit
3	116-0234	1	Pulley Kit
4	116-0235	1	Handle-Bypass Valve, Hydro
5	116-0236	1	Dipstick-Hydro W/Gasket
6	116-0237	1	Gasket-Dipstick, Hydro
7	116-1367	1	Swash Block Kit
8	116-1368	1	Pump Seal Kit
9	116-1369	1	Motor Seal Kit
10	116-1370	1	Tube Seal Kit
11	116-1371	1	Output Shaft Seal Kit
12	116-5469	1	Nose Cup-Uht
13	3257-42	1	Key-Woodruff
15	116-3287	1	Housing-LH
16	116-8915	1	Motor-Hydraulic LH 240Cc
17	116-7901	1	Magnetic Plugs Service Kit
18	116-1630	2	Check Valve ASM
19	116-1631	2	Plug-Check (W/O-Ring)
20	76-1900	2	O-Ring
21	116-8662	2	O-Ring-Check Valve
22	116-8974	4	Screw HH
23	116-8975	2	Screw-HSH
24	116-9922	2	Hydraulic Tube Kit
25	126-7711	1	Seal-Fan Drive
99	116-1373	1	Flow Test Kit ●
99	116-4245	1	Puller-Pulley ●

● Not illustrated

RH Hydro Assembly No. 126-1322

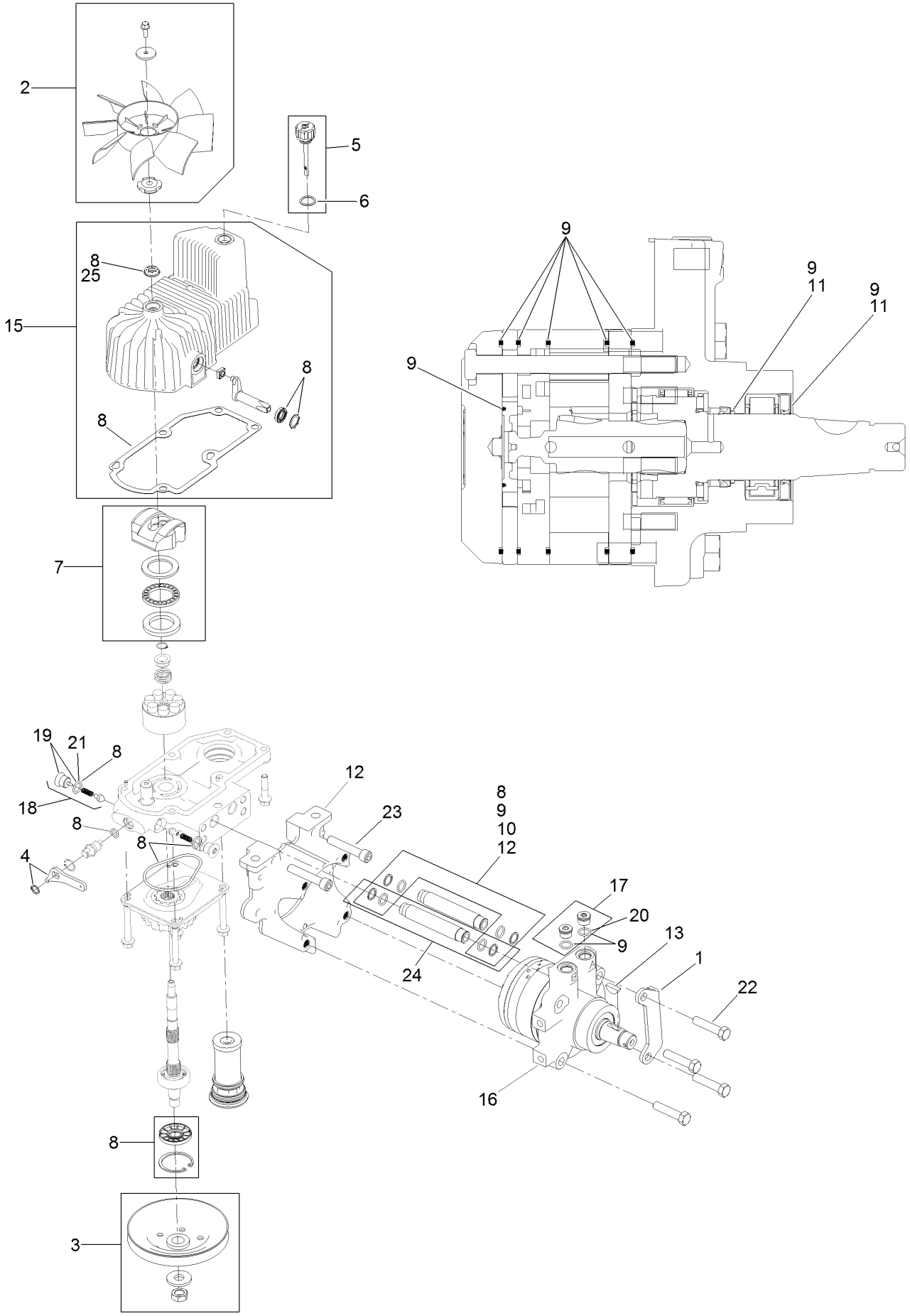

RH Hydro Assembly No. 126-1322 (continued)

Ref.	Part Number	Qty.	Description
1	116-9063	1	Mount-Shoe, Horse
2	116-0233	1	Fan Kit
3	116-0234	1	Pulley Kit
4	116-0235	1	Handle-Bypass Valve, Hydro
5	116-0236	1	Dipstick-Hydro W/Gasket
6	116-0237	1	Gasket-Dipstick, Hydro
7	116-1367	1	Swash Block Kit
8	116-1368	1	Pump Seal Kit
9	116-1369	1	Motor Seal Kit
10	116-1370	1	Tube Seal Kit
11	116-1371	1	Output Shaft Seal Kit
12	116-5469	1	Nose Cup-Uht
13	3257-42	1	Key-Woodruff
15	116-3288	1	Housing-RH
16	116-8916	1	Motor-Hydraulic RH 240Cc
17	116-7901	1	Magnetic Plugs Service Kit
18	116-1630	2	Check Valve ASM
19	116-1631	2	Plug-Check (W/O-Ring)
20	76-1900	2	O-Ring
21	116-8662	2	O-Ring-Check Valve
22	116-8974	4	Screw HH
23	116-8975	2	Screw-HSH
24	116-9922	2	Hydraulic Tube Kit
25	126-7711	1	Seal-Fan Drive
99	116-1373	1	Flow Test Kit ●
99	116-4245	1	Puller-Pulley ●

● Not illustrated

Rear Wheel Assembly

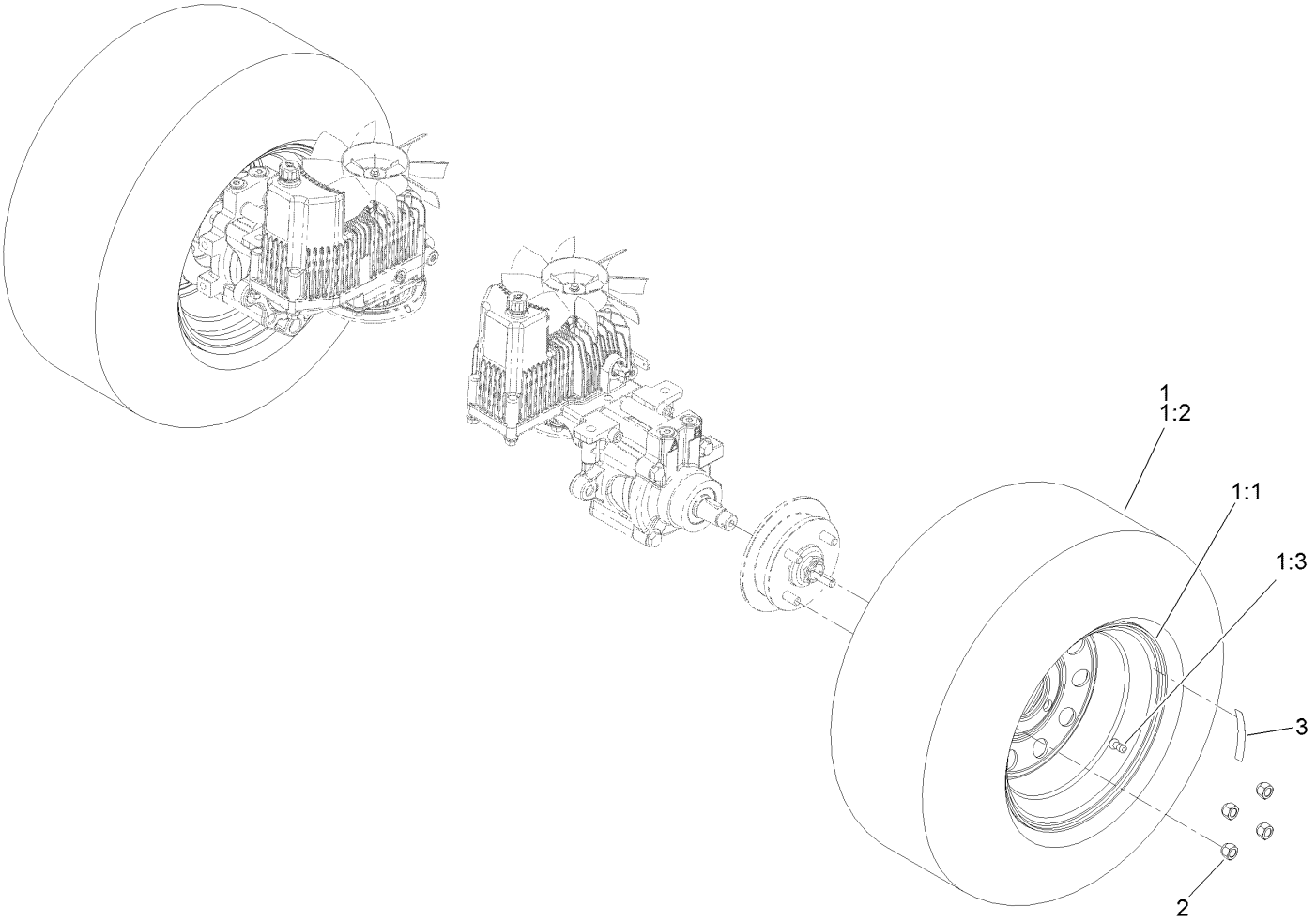

Rear Wheel Assembly (continued)

Ref.	Part Number	Qty.	Description
1	127-9544	2	Wheel And Tire ASM
1:1	127-9523	1	Tire
1:2	109-2875	1	Rim ASM
1:3	232-27	1	Stem-Valve
2	242-50	8	Nut-Lug
3	126-2055	2	Decal-Torque, Wheel Hub Lug

Park Brake Assembly

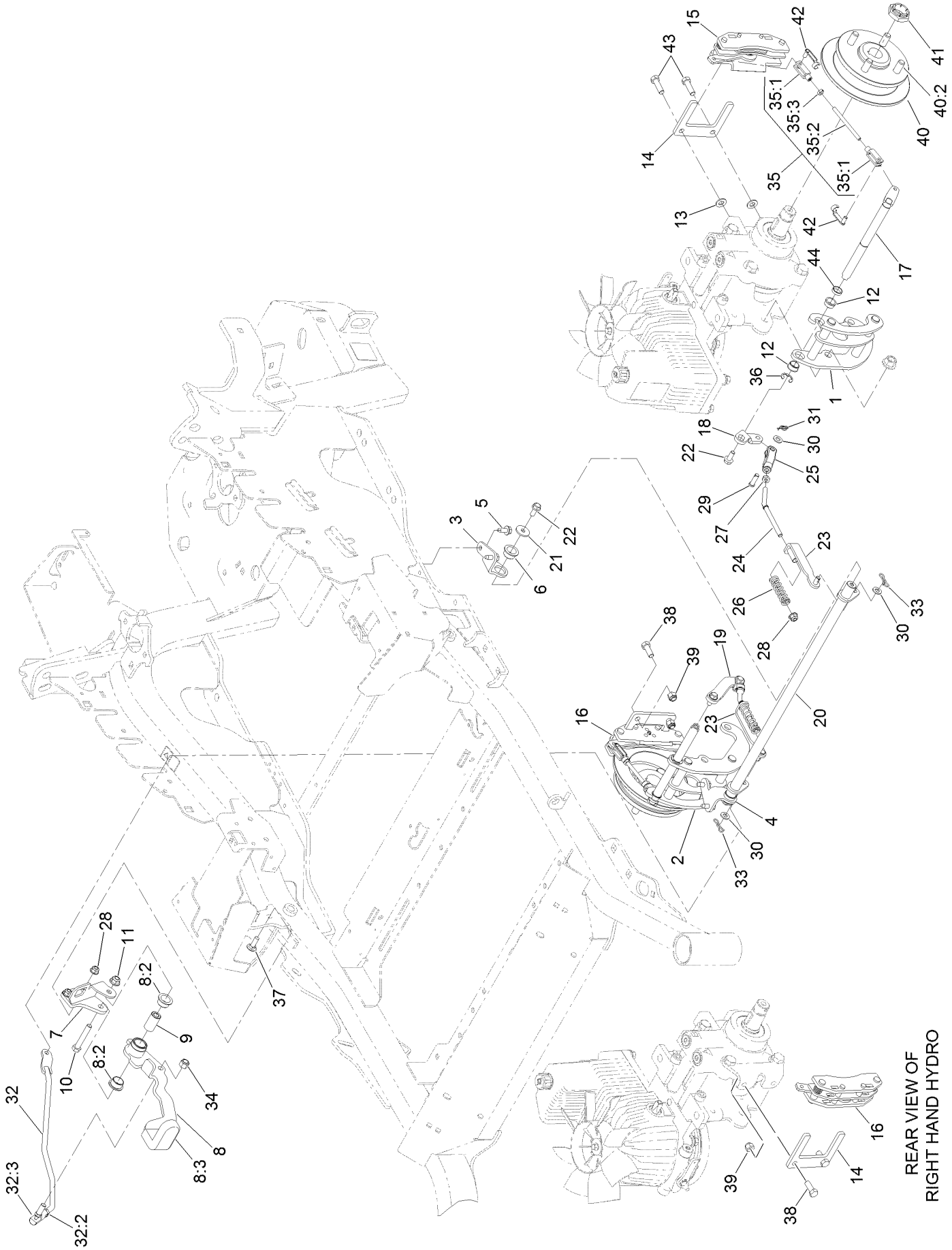

Park Brake Assembly (continued)

Ref.	Part Number	Qty.	Description
1	126-4248	1	Mount-Bellcrank, LH
2	126-4249	1	Mount-Bellcrank, RH
3	116-9681	1	Mount-Pivot, LH
4	116-9682	1	Mount-Pivot, RH
5	32144-70	4	Screw-HWHTF
6	109-8054	2	Bushing-Flange
7	116-9096-01	1	Bracket-Mount
8	132-9406	1	Brake Lever ASM W/ Grip
8:2	109-8054	2	Bushing-Flange
8:3	132-4749	1	Grip-Lever
9	116-9117	1	Handle-Pivot, Brake
10	323-11	1	Screw-HH
11	104-8301	1	Nut-HF, NI
12	126-6199	4	Bushing
13	3256-24	2	Washer-Flat
14	109-0958	2	Plate-Mount, Brake
15	109-2889	1	Caliper-Brake
16	116-9103	1	Caliper-Brake, RH
17	126-4251	2	Bellcrank
18	126-3715	1	Arm-Inner, LH
19	126-3716	1	Arm-Inner, RH
20	116-9080	1	Shaft-Cross
21	115-7109	2	Washer-Flat
22	98-9940	4	Screw-HHF
23	116-9608	2	Bracket-L
24	116-9086	2	Linkage-Mid
25	126-3693	2	Yoke-Offset
26	116-9085	2	Spring-Compression
27	3220-2	2	Nut-Jam
28	104-8300	4	Nut-HF, NI
29	1-808280	2	Pin-Clevis
30	3256-23	4	Washer-Plain
31	116-6639	2	Pin-Cotter, Locking
32	116-9102	1	Front Linkage ASM
32:2	94-7572	1	End-Tie Rod, RH
32:3	3220-3	1	Nut-HJ
33	119-1415	2	Pin-Cotter, Locking
34	3296-6	1	Nut-Lock
35	126-7587	2	Rear Linkage ASM
35:1	126-7588	2	Yoke
35:2	116-9069	1	Linkage, Rear
35:3	3220-1	1	Nut-Jam
36	32120-19	2	E-Ring
37	3230-2	2	Bolt-CARR
38	323-6	2	Screw-HH
39	3296-39	2	Nut-Lock, NI
40	116-1746	2	Wheel Hub ASM
40:2	116-1696	4	Stud-Wheel
41	116-1399	2	Locknut
42	126-6395	4	Pin-Clevis, Spring
43	92-5727	2	Screw-Lock, Patch
44	126-6200	2	Spacer

Fuel System Assembly

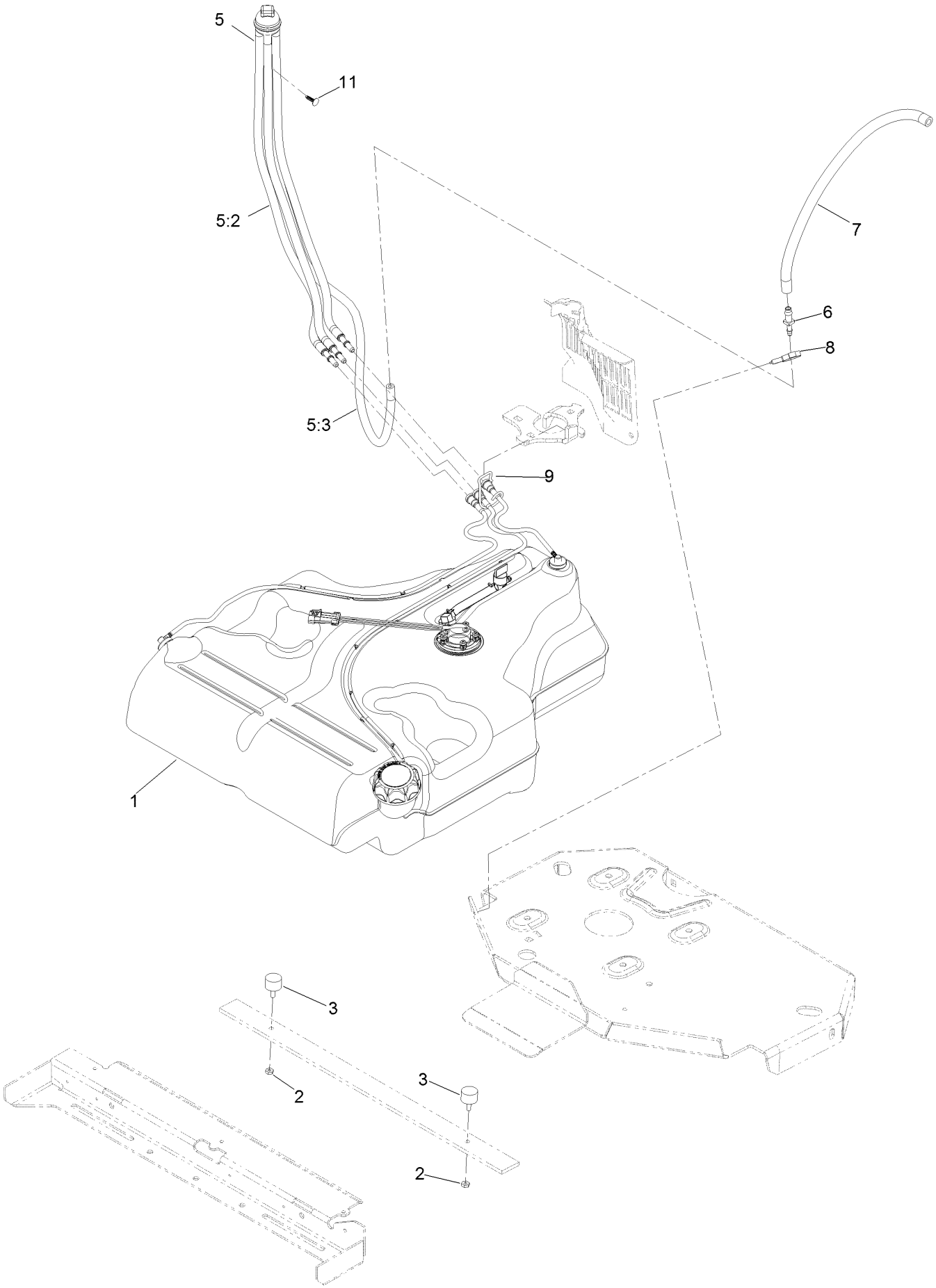

Fuel System Assembly (continued)

Ref.	Part Number	Qty.	Description
1	135-0643	1	Fuel Tank ASM
2	3218-1	2	Nut-Jam
3	1-523420	2	Bumper
5	127-0583	1	Fuel Manifold Vent ASM
5:2	109-0302	3	Hose-Fuel
5:3	108-5376	1	Hose-Fuel
6	116-5072	1	Fitting-Straight
7	116-5087	1	Hose-Fuel
8	105-1853	1	Clamp-Hose
9	116-6005	1	Retainer-Line, Vapor
11	125-8067	1	Plug-Plastic

Fuel Tank Assembly No. 135-0643

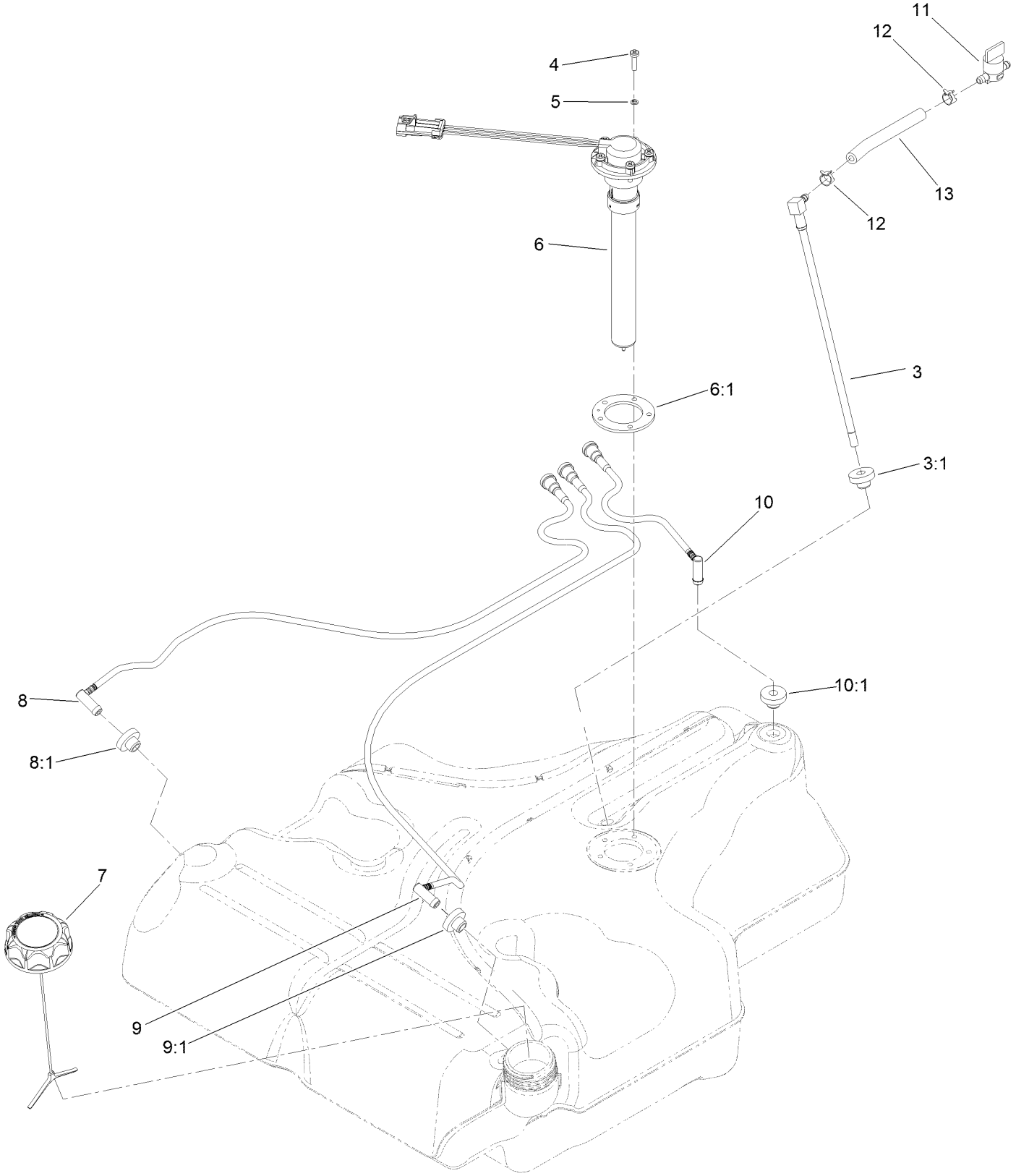

Fuel Tank Assembly No. 135-0643 (continued)

Ref.	Part Number	Qty.	Description
3	116-2459	1	Fuel Line Kit (With Grommet)
3:1	46-6560	1	Bushing
4	3290-500	5	Screw-PPH
5	3253-17	5	Washer-Lock
6	126-3913	1	Float-Sender, Fuel
6:1	126-3950	1	Gasket-Sender
7	126-1789	1	Cap-Fuel, Ratcheting
8	116-2460	1	RH Vent Line Kit (With Grommet)
8:1	46-6560	1	Bushing
9	116-2461	1	LH Vent Line Kit (With Grommet)
9:1	46-6560	1	Bushing
10	116-2462	1	Rear Vent Line Kit (With Grommet)
10:1	46-6560	1	Bushing
11	1-603770	1	Valve-Fuel
12	2412-98	2	Clamp-Hose
13	109-0650	1	Hose-Fuel

Seat Mounting Assembly

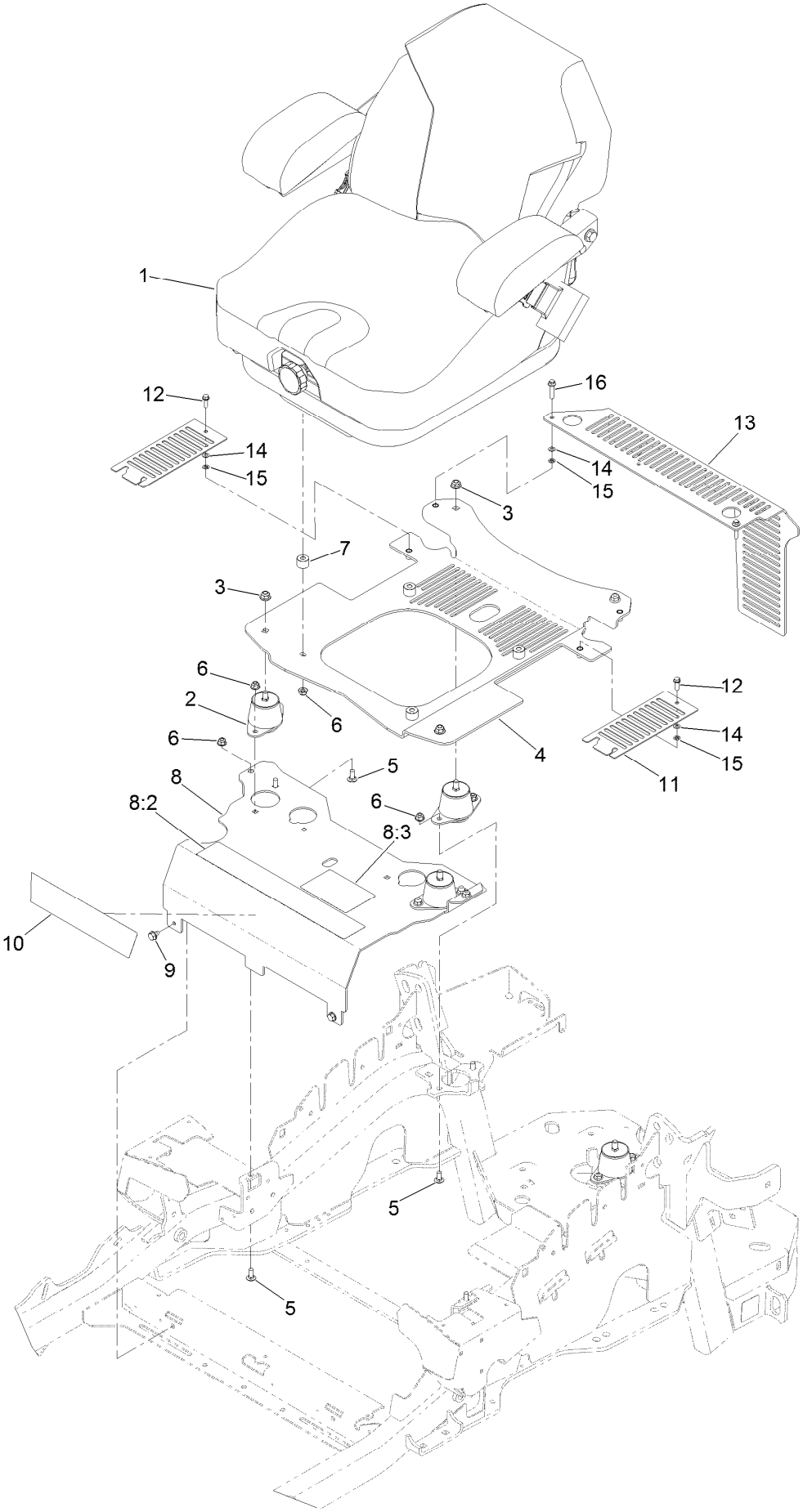

Seat Mounting Assembly (continued)

Ref.	Part Number	Qty.	Description
1	125-3107	1	Suspension Seat ASM
2	109-9034	4	Isolator-Seat
3	104-8301	4	Nut-HF, NI
4	117-0910	1	Seat Base ASM
5	3230-23	10	Screw-CARR
6	104-8300	14	Nut-HF, NI
7	116-9329	4	Spacer
8	116-2324	1	Mount-Seat
8:2	114-4468	1	Decal-Console
8:3	125-9383	1	Decal-Service Aid
9	9266934	2	Screw
10	119-2507	1	Decal
11	117-0901-03	2	Cover
12	32105-15	2	Screw-HWH
13	119-4241-03	1	Guard-CE
14	3256-60	4	Washer-Flat
15	106-8737	4	Nut-Retainer
16	3234-21	2	Screw-HHF

Seat Assembly No. 125-3107

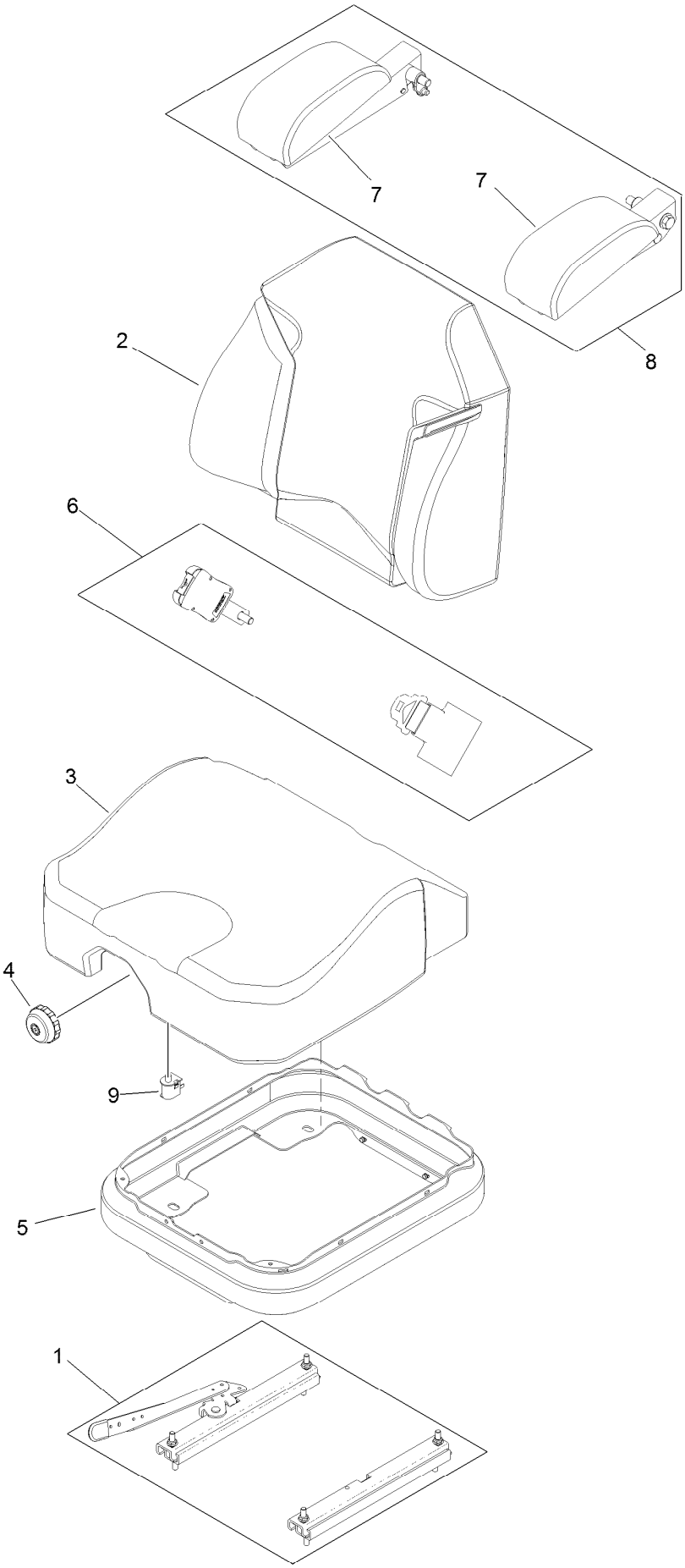

Seat Assembly No. 125-3107 (continued)

Ref.	Part Number	Qty.	Description
1	116-8910	1	Seat Track Set
2	125-3112	1	Cover-Back
3	125-3111	1	Cover-Cushion
4	116-8911	1	Knob-Adjuster
5	116-5659	1	Cover-Suspension Bellows
6	126-2061	1	Seat Belt Service Kit
7	109-9802	1	Arm Rest Pad Set
8	109-9803	1	Arm Rest Set
9	82-2190	1	Switch-Bail

Motion Control Assembly

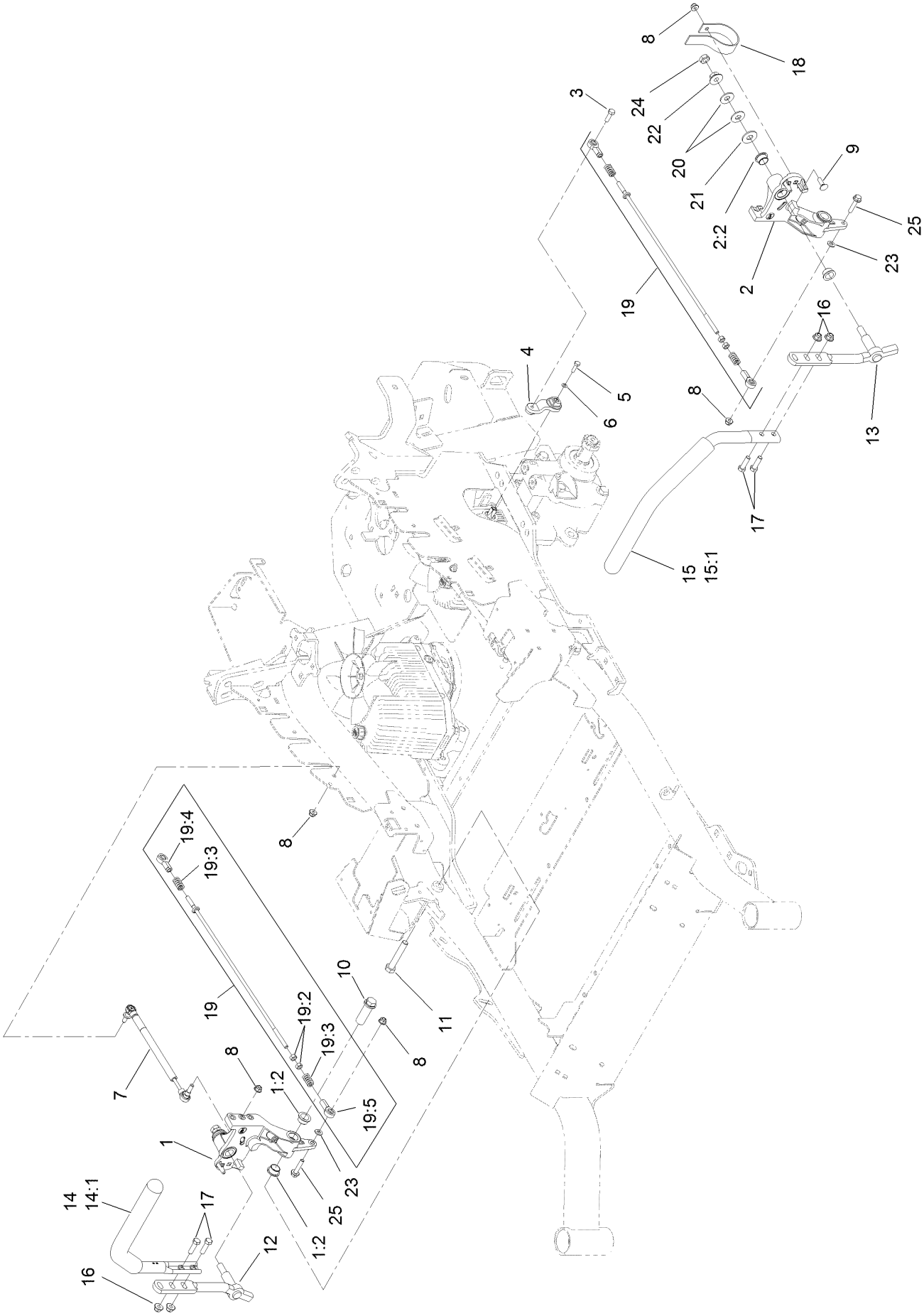

Motion Control Assembly (continued)

Ref.	Part Number	Qty.	Description
1	116-0880	1	RH Motion Control And Bushing ASM
1:2	109-8054	4	Bushing-Flange
2	116-0881	1	LH Motion Control And Bushing ASM
2:2	109-8054	4	Bushing-Flange
3	116-0648	2	Screw-HH, Thread Locking ●
4	109-4581	2	Arm-Control, Pump
5	9080046	2	Screw-HH ●
6	1-303435	2	Washer-Spring
7	116-0027	2	Damper-Control, Motion
8	104-8300	8	Nut-HF, NI
9	3230-2	2	Bolt-CARR
10	109-5891	2	Hub-Threaded
11	325-12	2	Screw-HH
12	116-0039	1	Lever-Control Motion, RH
13	116-0040	1	Lever-Control Motion, LH

Ref.	Part Number	Qty.	Description
14	109-6589	1	RH Steering Handle ASM
14:1	109-5668	1	Grip-Control, Lever
15	109-6590	1	LH Steering Handle ASM
15:1	109-5668	1	Grip-Control, Lever
16	104-8301	4	Nut-HF, NI
17	323-7	4	Screw-HH
18	109-5575	2	Spring-Leaf
19	109-8107	2	Pump Linkage Rear ASM
19:2	3219-2	2	Nut-Hex
19:3	1-323245	2	Spring-Compression
19:4	1-633152	1	Balljoint-LH
19:5	1-543017	1	Balljoint-RH
20	109-9505	4	Washer-Spring
21	3256-6	2	Washer-Flat
22	32128-56	2	Nut-HF
23	3256-23	2	Washer-Plain
24	3218-5	2	Nut-Jam
25	115-1794	2	Screw-HHF

● Use Pro-Lock, Nut Type (P/N 1-840022, .5ml tube) on threads.

Console Assembly

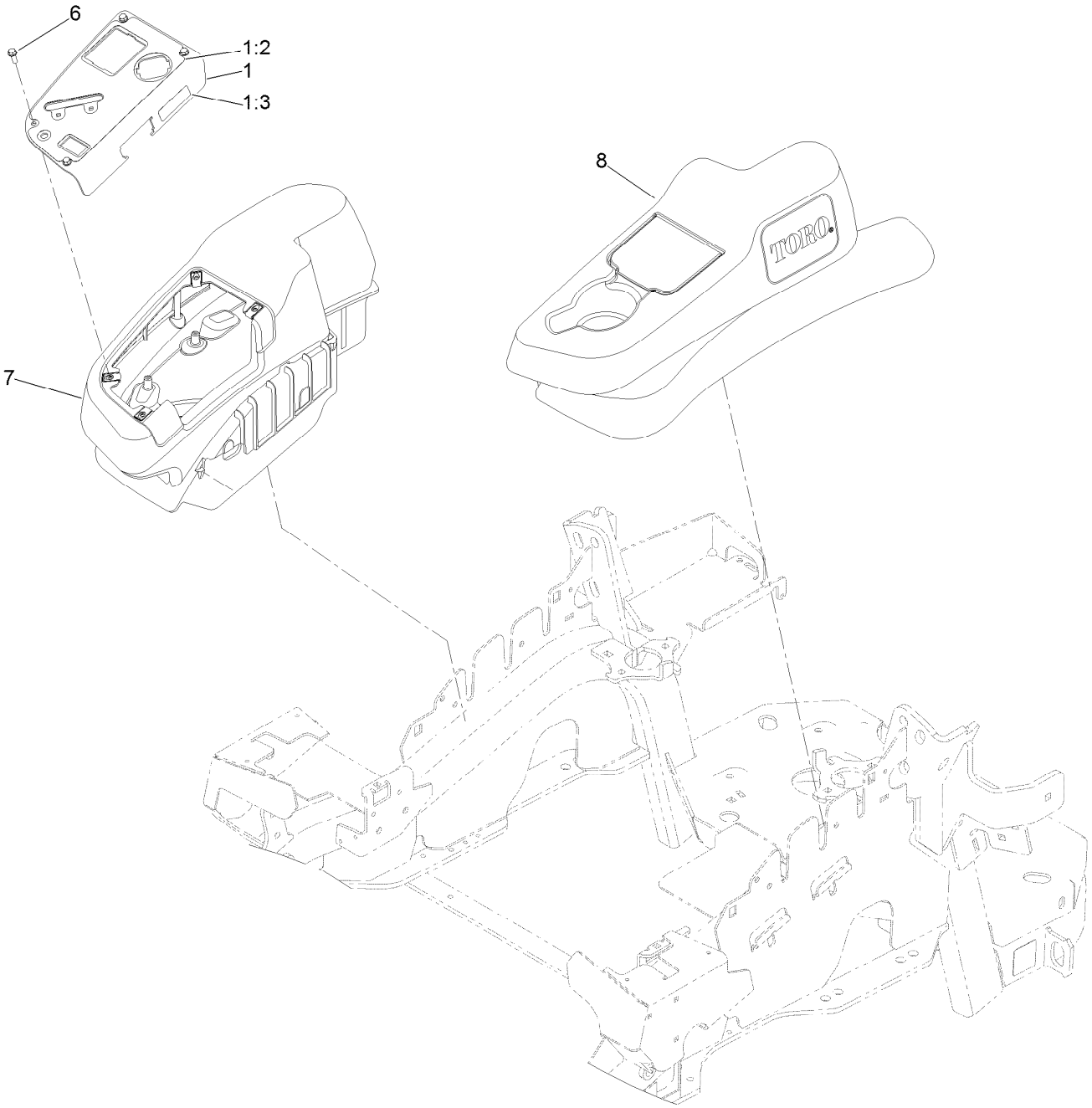

Console Assembly (continued)

Ref.	Part Number	Qty.	Description
1	114-9837	1	Control Panel ASM
1:2	120-5898	1	Decal-Control Panel
1:3	114-4466	1	Decal-Fuses
6	32105-15	4	Screw-HWH
7	115-7402	1	RH Narrow Fender/Console ASM
8	115-7403	1	LH Narrow Fender/Console ASM

RH Console Assembly No. 115-7402

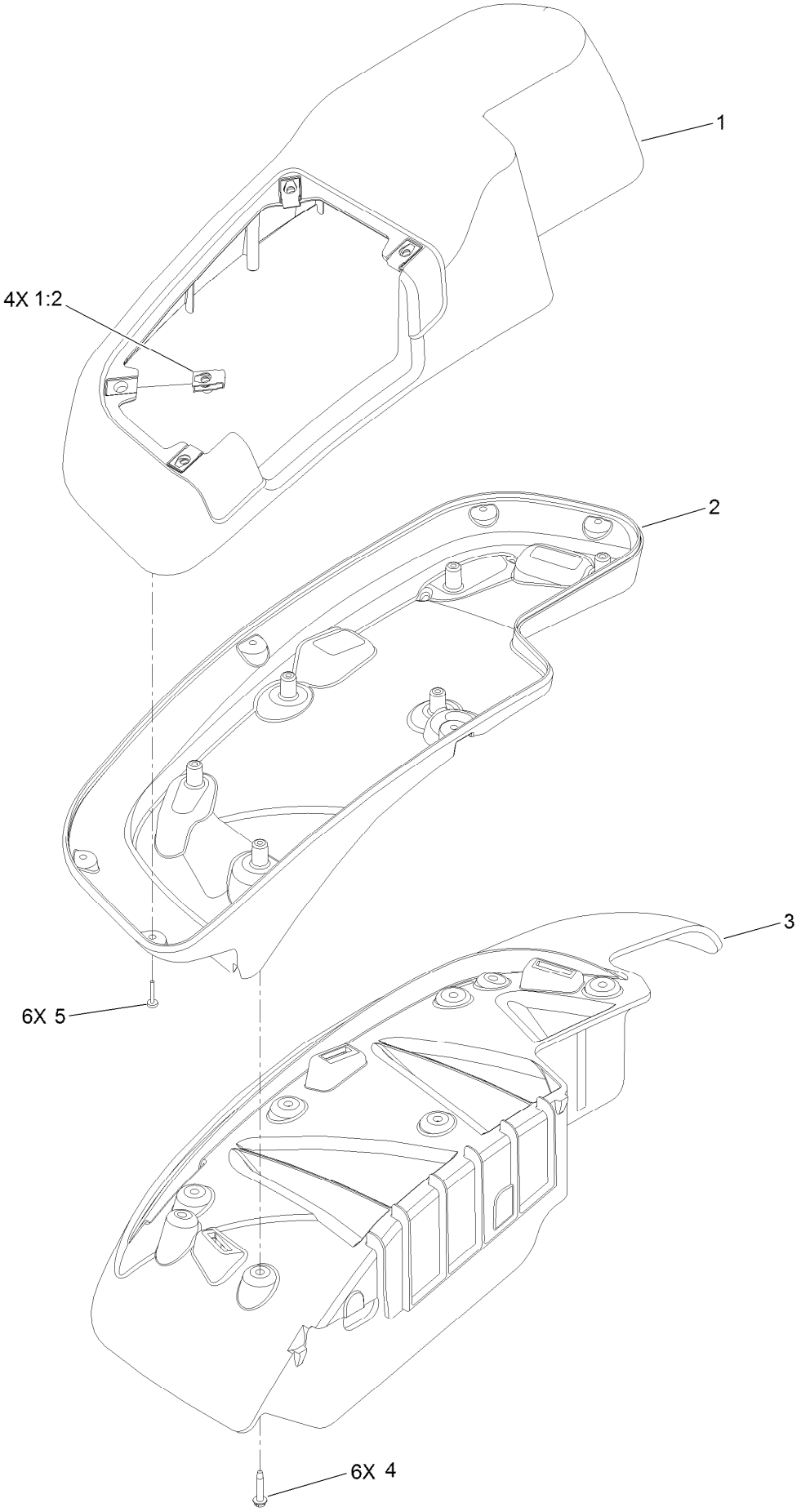

RH Console Assembly No. 115-7402 (continued)

Ref.	Part Number	Qty.	Description
1	114-1542	1	RH Console Top ASM
1:2	107069	4	Clip
2	114-9823	1	Console-Narrow, RH
3	109-9077	1	Fender-Narrow, RH
4	32144-89	6	Screw-Thread Forming
5	117-0347	6	Screw-PPH

LH Console Assembly No. 115-7403

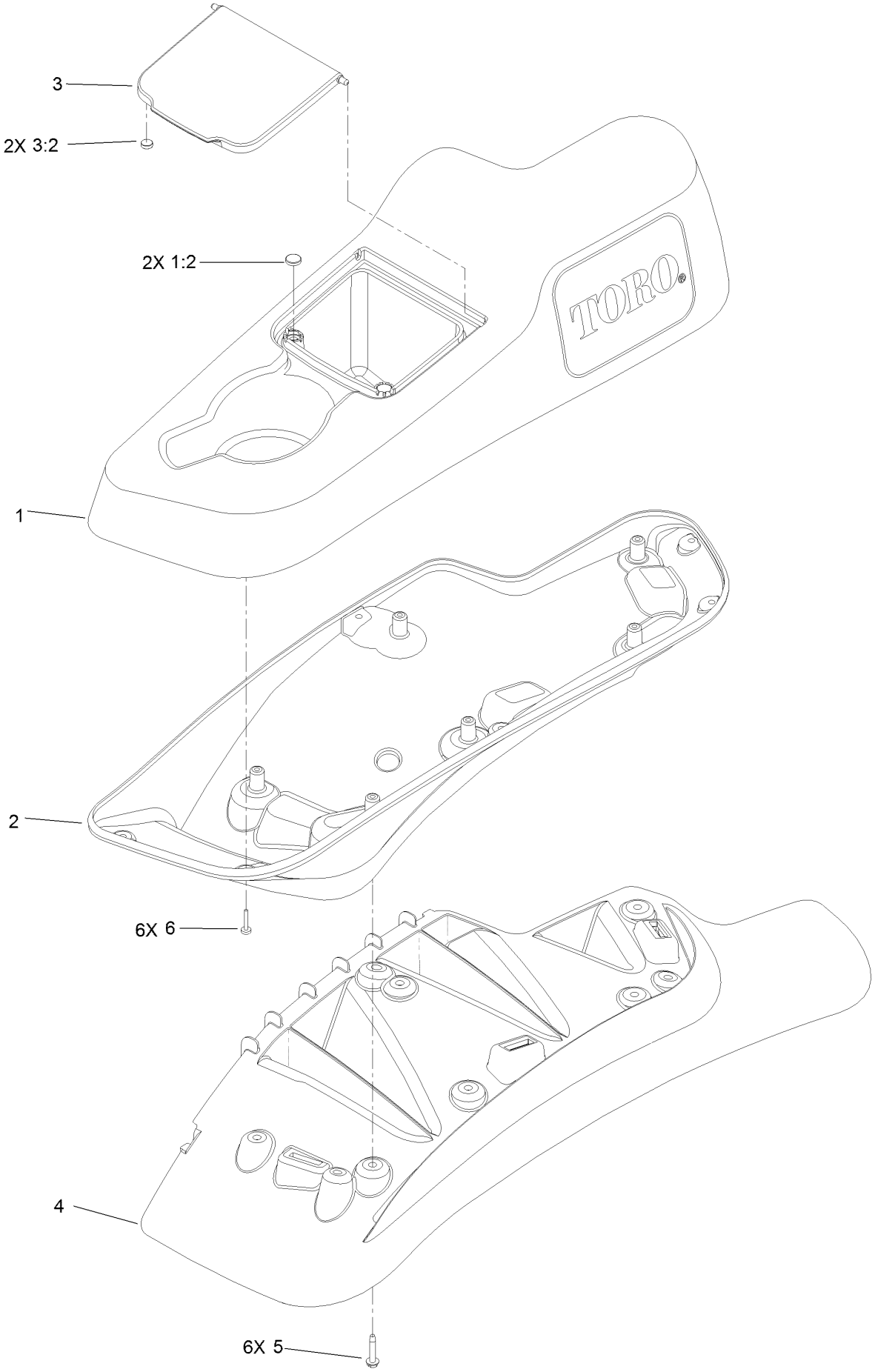

LH Console Assembly No. 115-7403 (continued)

Ref.	Part Number	Qty.	Description
1	114-1541	1	LH Console Top ASM
1:2	117-0883	2	Puck
2	114-9821	1	LH Lower Console ASM
3	114-1536	1	Lid ASM
3:2	114-5896	2	Magnet
4	109-9080	1	Fender-LH
5	32144-89	6	Screw-Thread Forming
6	117-0347	6	Screw-PPH

Electrical Assembly

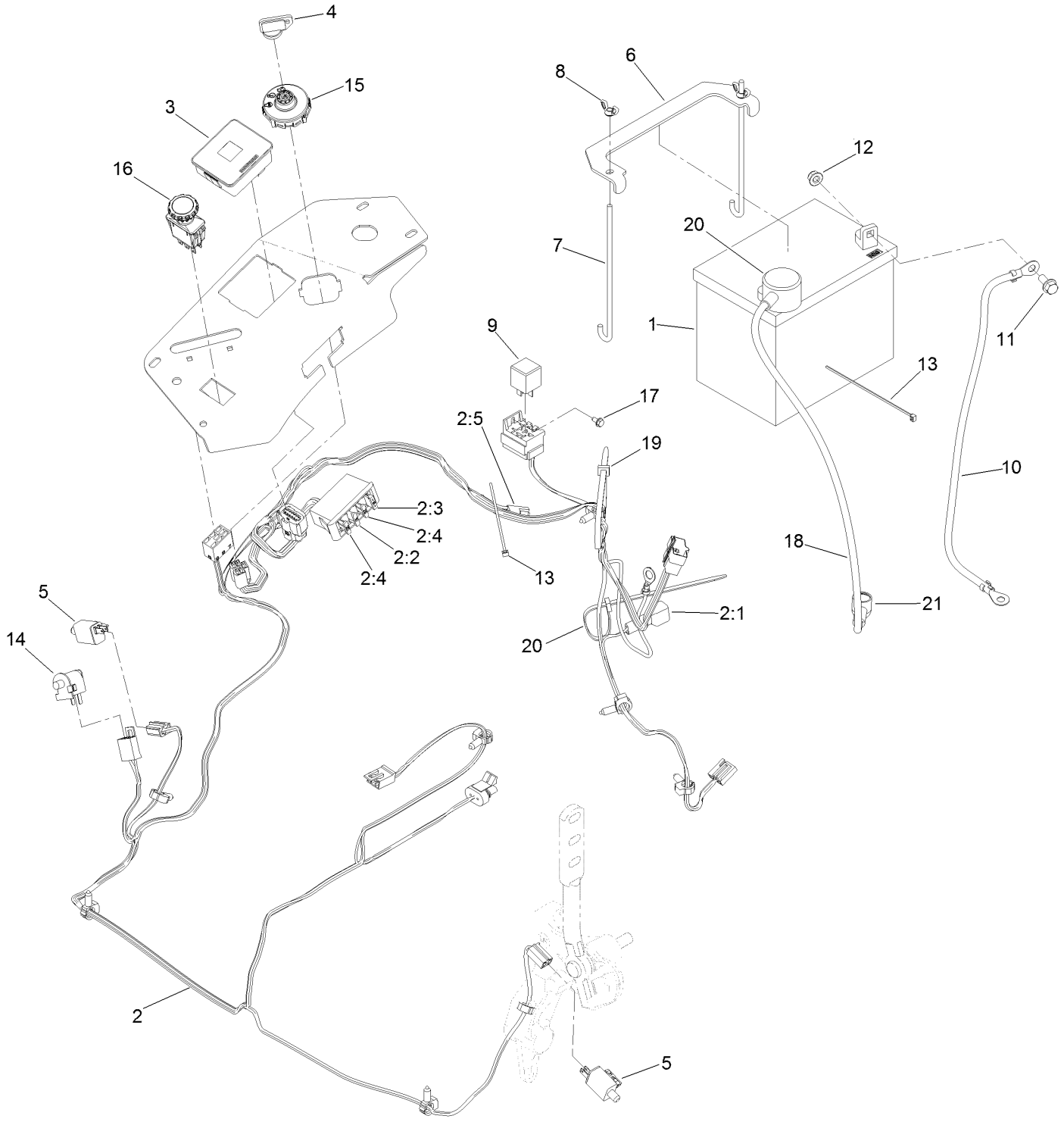

Electrical Assembly (continued)

Ref.	Part Number	Qty.	Description
1	104-8162	1	Battery-Dry
2	116-6009	1	Harness-Wire, Main ●
2:1	103-3895	1	Diode
2:2	218-578	1	Fuse-Blade, 10 Amp
2:3	109355	1	Fuse-Blade, 15 Amp
2:4	109102	2	Fuse-Blade, 25 Amp
2:5	116-0053	1	Cap-Plug
3	117-3882	1	Fuel/Hour Meter ASM
4	1-603511	1	Keys-Ignition (Spare Pair)
4	63-8360	1	Key-Ignition
5	110-6765	2	Switch
6	116-0042-03	1	Strap-Tie Down, Battery
7	1-633651	2	Bolt-Holddown
8	1-543792	2	Wingnut
9	1-643275	1	Relay
10	114-1218	1	Cable-Battery, Negative
11	3234-5	2	Screw-HHF
12	104-8300	2	Nut-HF, NI
13	1-303287	2	Tie-Cable
14	82-2190	1	Switch-Bail
15	137-4100	1	Switch-Ignition
16	116-0124	1	Switch-PTO, 10 Amp
17	104-2065	1	Screw-HWH
18	115-3864	1	Cable-Battery, Positive
19	1-303335	2	Tie-Plastic
20	109-2407	1	Insulator-Battery
21	1-543393	1	Insulator-Solenoid

● Use dielectric grease on all unsealed connectors and terminals only. Do not apply in sealed connectors.

Deck Lift Assembly

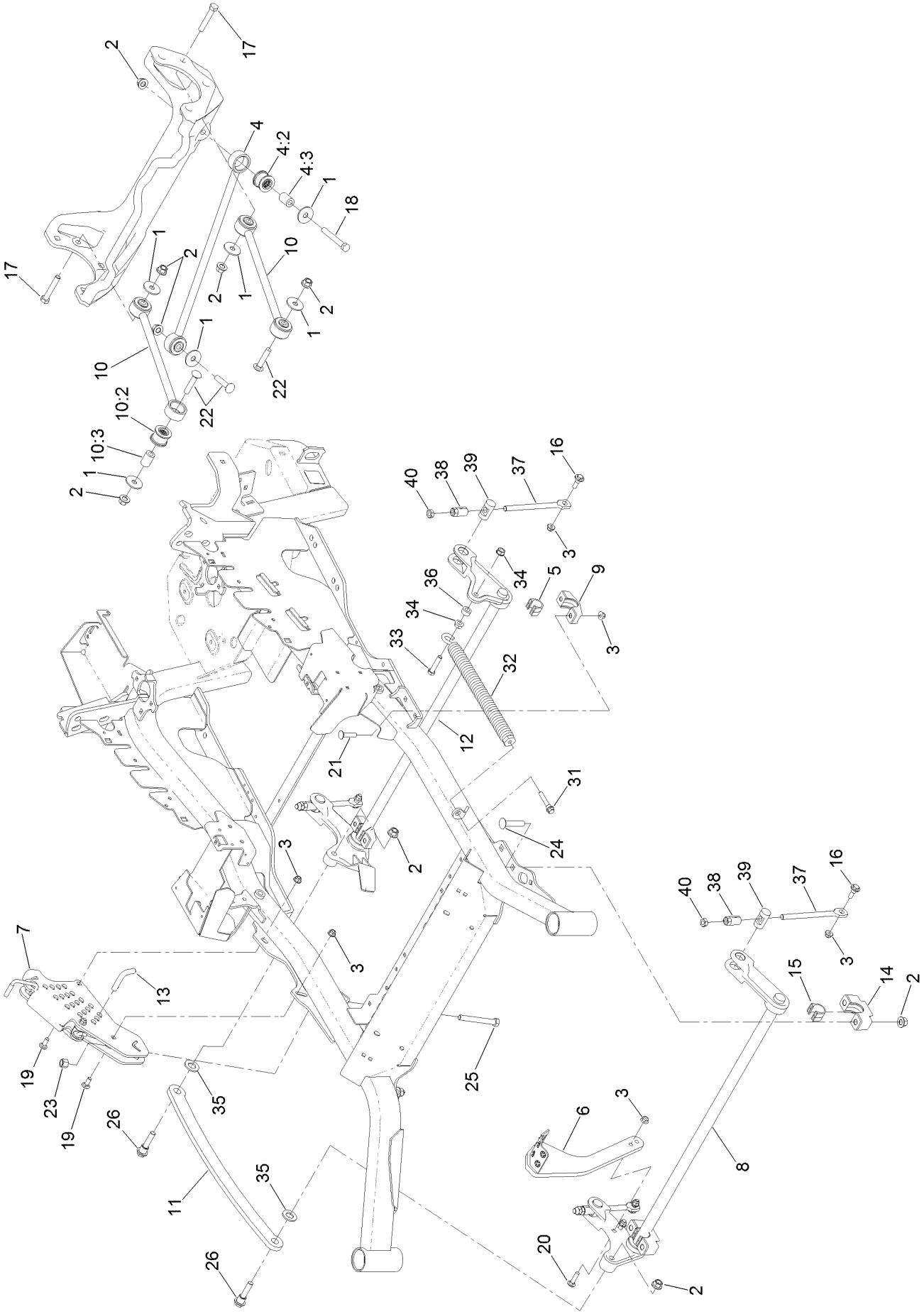

Deck Lift Assembly (continued)

Ref.	Part Number	Qty.	Description
1	86-1990	6	Washer-Thrust
2	99-5107	12	Nut-Lock
3	104-8301	12	Nut-HF, NI
4	109-5013	1	Panhard Rod ASM
4:2	109-5009	2	Bushing-Suspension, Rubber
4:3	109-5010	2	Spacer
5	109-7173	2	Bearing-Cross Shaft, Rear
6	116-1919-01	1	Lever-Foot
7	117-3842	1	Height-Of-Cut ASM
8	126-2477-03	1	Decklift-Front
9	127-0553	2	Support-Cross Shaft, Bearing Rear
10	109-7952	2	Deck Strut ASM
10:2	109-5009	2	Bushing-Suspension, Rubber
10:3	109-5010	2	Spacer
11	116-0797-03	1	Link-Lift, Deck
12	116-2645-03	1	Lift-Deck, Rear
13	116-5584	1	Pin-HOC
14	109-9409	2	Support-Cross Shaft, Bearing
15	109-9410	2	Bearing-Cross Shaft, Front
16	109-9840	4	Screw-Shoulder, HHF
17	325-12	2	Screw-HH
18	325-17	1	Screw-HH
19	3231-2	2	Bolt-CARR
20	3231-4	2	Screw-CARR
21	3231-7	4	Screw-CARR
22	3233-34	3	Screw-CARR
23	3296-23	1	Nut-Lock, NI
24	116-1700	4	Bolt-CARR
25	116-0559	1	Bolt-TAP
26	116-2022	2	Screw-HHF, Shoulder
31	92-7674	1	Bolt-Shoulder
32	116-0886	1	Spring-Extension
33	109-9065	1	Screw-HH
34	32128-37	2	Nut-HF
35	3256-28	2	Washer-Flat
36	116-2695	1	Spacer
37	109-8007	4	Link-Adjuster, Deck Lift
38	109-7840	4	Adjuster-Lift, Deck
39	109-8353	4	Trunnion
40	3218-5	4	Nut-Jam

Height-of-Cut Assembly No. 117-3842

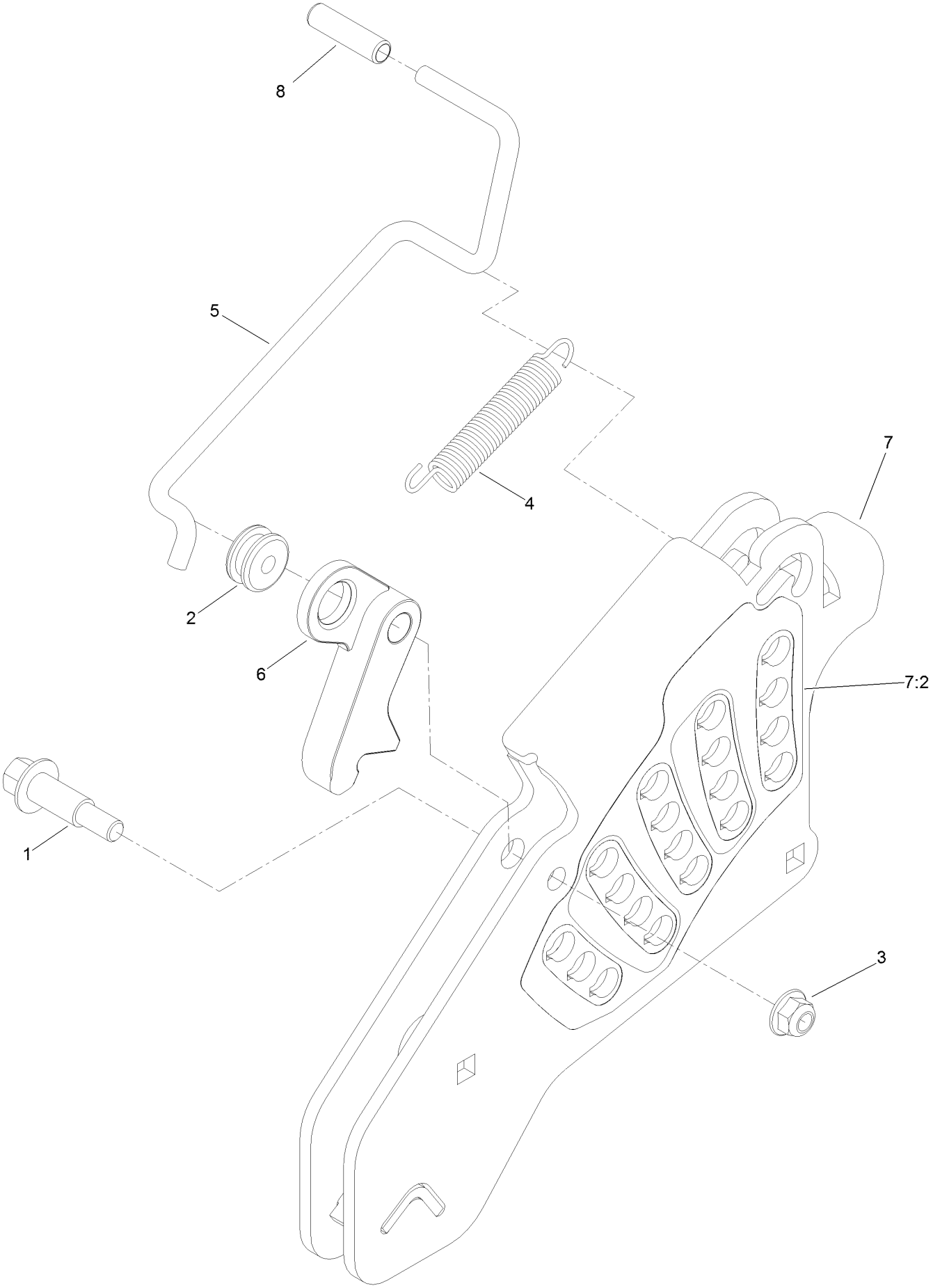

Height-of-Cut Assembly No. 117-3842 (continued)

Ref.	Part Number	Qty.	Description
1	62-1330	1	Bolt-Shoulder
2	109-7130	1	Grommet
3	104-8301	1	Nut-HF, NI
4	109-7124	1	Spring-Extension
5	109-7128	1	Rod-Lock, Transport
6	116-0118	1	Pawl-Transport, HOC
7	117-3837	1	Plate-Height Adjuster
7:2	114-4470	1	Decal-HOC
8	109-8250	1	Grip-Lever

Engine, Clutch and Muffler Assembly

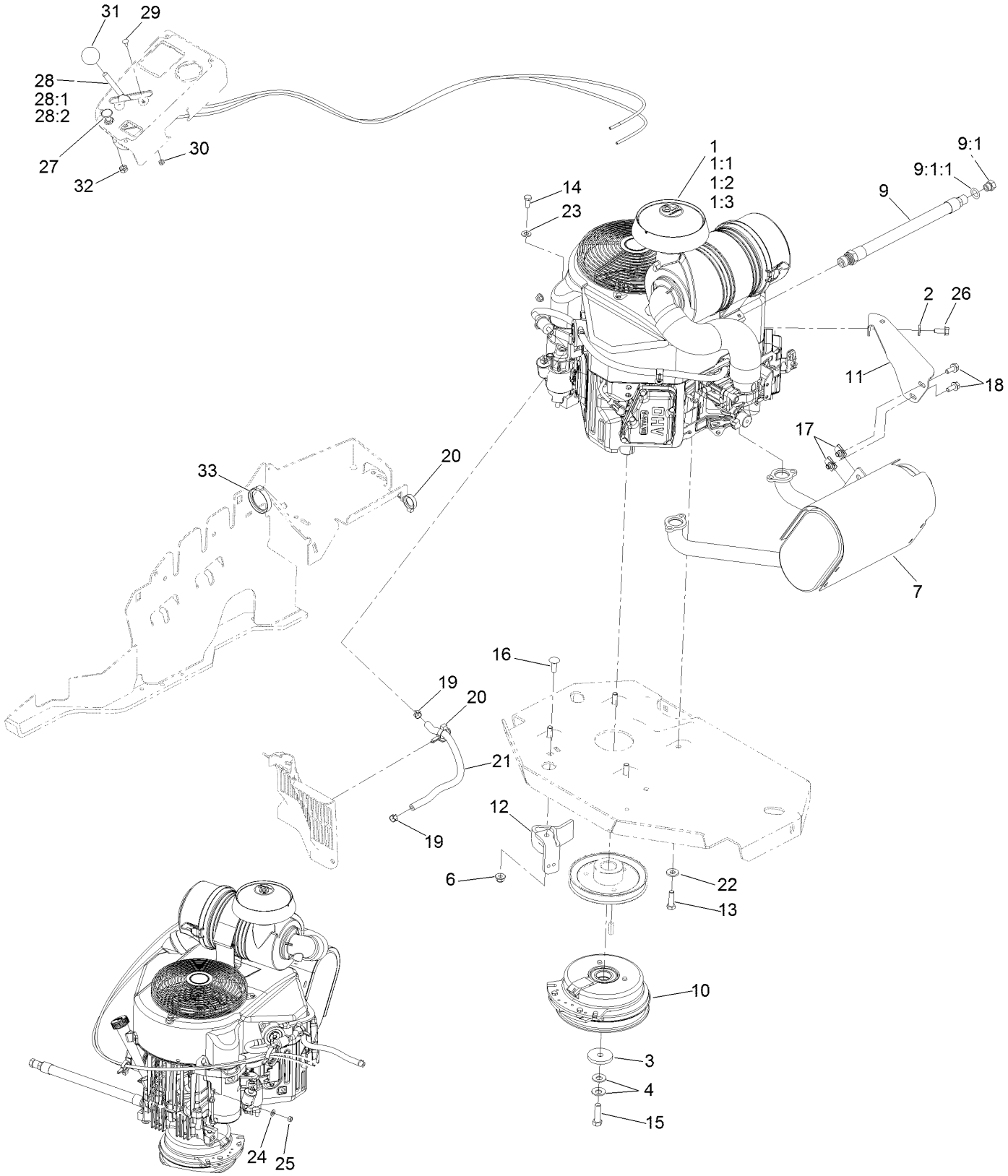

Engine, Clutch and Muffler Assembly (continued)

Ref.	Part Number	Qty.	Description
1		1	Engine-Kawasaki, Fx691V-S12-R ■▲
1:1		1	Kawasaki 49065-7007 Engine Oil Filter ■▲
1:2		1	Kawasaki 11013-7044 Engine Air Filter ■▲
1:3		1	Kawasaki 11013-7045 Safety Filter ■▲
2	1-303334	1	Washer-Spring
3	109-6919	1	Washer-Clutch
4	1-603610	2	Washer-Spring
6	104-8301	1	Nut-HF, NI
7	116-1715	1	Muffler
9	116-4924	1	Engine Oil Drain Hose ASM ◆
9:1	353-508	1	Plug-HH ●
9:1:1	237-42	1	O-Ring
10	116-1620	1	Clutch Kit
11	116-1435	1	Bracket-Muffler
12	116-2612-01	1	Clutch-Anchor
13	323-7	4	Screw-HH
14	33114-020	1	Screw-HH
15	109-9761	1	Screw-HH ❑
16	3231-22	1	Screw-CARR
17	94-2413	2	Nut-U
18	3234-5	2	Screw-HHF
19	2412-98	2	Clamp-Hose
20	105-1853	2	Clamp-Hose
21	109-0296	1	Hose-Fuel
22	98-5975	4	Washer-Belleville
23	33094-00	1	Washer-Plain
24	3256-22	2	Washer-Flat
25	3217-5	2	Nut-Hex
26	95-4184	1	Screw-HHF
27	115-2753	1	Control-Choke
28	110-5727	1	Throttle Control ASM
28:1	112-2334	1	Lever-Throttle
28:2	110-5728	1	Cable-Throttle
29	1-807513	2	Bolt-CARR
30	3296-2	2	Nut-Lock, NI
31	1-603175	1	Knob-Ball
32	3220-3	1	Nut-HJ
33	117-7817	1	Clamp-Harness

● Torque to 24-26 ft-lb
▲ Obtain parts from www.kawpowerepc.com
◆ Use a Teflon Pipe Sealant or equivalent on threads.
❑ Use Pro-Lock, Nut Type (P/N 1-840022, .5ml tube) on threads.
■ Not serviced separately

Deck Assembly

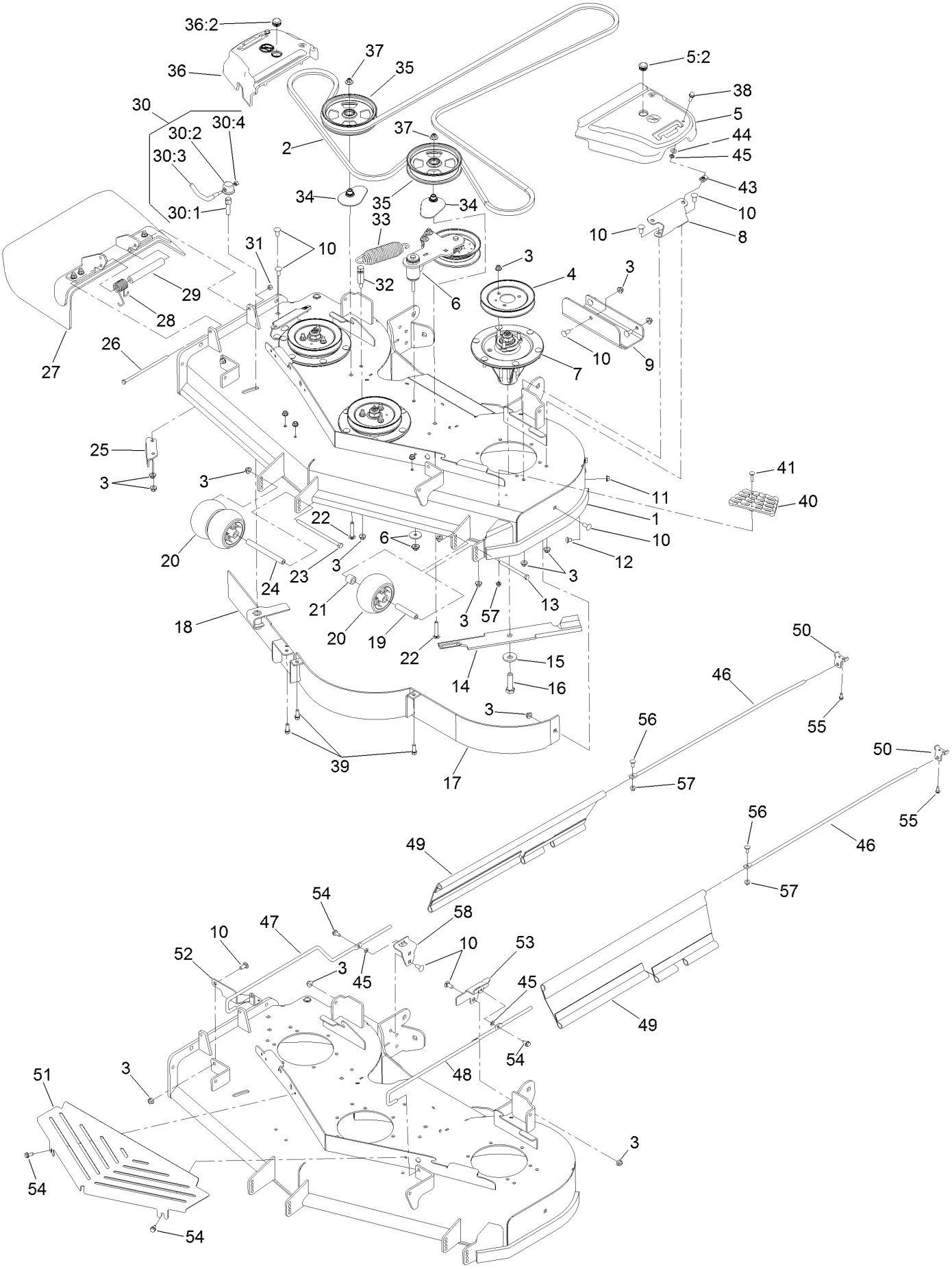

Deck Assembly (continued)

Ref.	Part Number	Qty.	Description
1	136-8627	1	Deck Decal ASM
2	115-7426	1	Belt-V
3	104-8301	44	Nut-HF, NI
4	115-7450	3	Pulley
5	117-7814	1	LH Belt Cover ASM
5:2	117-3824	1	Plug-Plastic
6		1	Idler Arm ASM ●
7	127-0560	3	Spindle ASM
8	114-5881-01	2	Bracket-Cover, Belt
9	121-7975-01	1	Plate-Skid
10	3231-27	14	Screw-CARR
11	3290-357	6	Nut-HHF, Whiz
12	108-5387	3	Screw-CARR
13	323-23	1	Screw-HH
14	105-7781-03	3	Blade-18In, Hi Flow
15	103-0865	3	Washer-Blade Bolt, Heavy
16	51-4060	3	Screw-Blade
17	115-7461-01	1	Baffle ASM
18	131-1480-01	1	Adjustable Baffle ASM
19	98-7912	1	Tube-Spanner
20	1-603299	3	Roller-Scalp, Anti
21	98-7913	1	Tube-Spacer
22	3231-40	2	Bolt-CARR, Short Neck
23	108-5388	1	Screw-HH
24	98-5967	1	Spacer-Wheel
25	107-8541-01	1	Baffle-Discharge
26	322-50	1	Screw-HH
27	108-2792	1	Rubber Deflector ASM
28	108-4052	1	Spring-Torsion
29	105-4622	1	Spacer
30	107-1664	1	Lever ASM
30:1	106-3239	1	Screw-Lock
30:2	107-1644	1	Cap-Lock
30:3	106-3241	1	Lever-Lock
30:4	3296-29	1	Nut-Lock, NI
31	3296-29	1	Nut-Lock, NI
32	114-5867	1	Anchor-Spring, Tall
33	116-6317	1	Spring-Extension
34	109-2872	2	Spacer-Pulley
35	136-5404	2	Pulley-Idler, Flat
36	117-7813	1	RH Belt Cover ASM
36:2	117-3824	1	Plug-Plastic
37	109-6658	2	Nut-Flange, NI
38	3234-29	2	Screw-HHF
39	92-1624	3	Screw-HWH
40	126-4781-03	1	Step-Deck
41	3230-3	1	Screw-CARR
43	94-2413	2	Nut-U
44	73-0041	2	Washer-Thrust
45	117-2749	4	Nut-Push
46	131-3987	2	Rod-Support, Upper
47	131-4191	1	Rod-Support, Lower (RH)
48	131-4192	1	Rod-Support, Lower (LH)
49	131-7652	2	Guard-Side
50	131-4194-03	2	Bracket-Mounting, Upper
51	133-1837-03	1	Shield-Front
52	131-4195-03	1	Bracket-Mounting, Front
53	131-4196-03	1	Bracket-Mounting, Rear (LH)
54	32144-70	4	Screw-HWHTF
55	32144-10	2	Screw-HWH
56	3230-23	2	Screw-CARR
57	104-8300	3	Nut-HF, NI
58	132-0920-03	1	Bracket-Mounting, Rear (RH)

● Not serviced separately

Deck Decal Assembly No. 136-8627

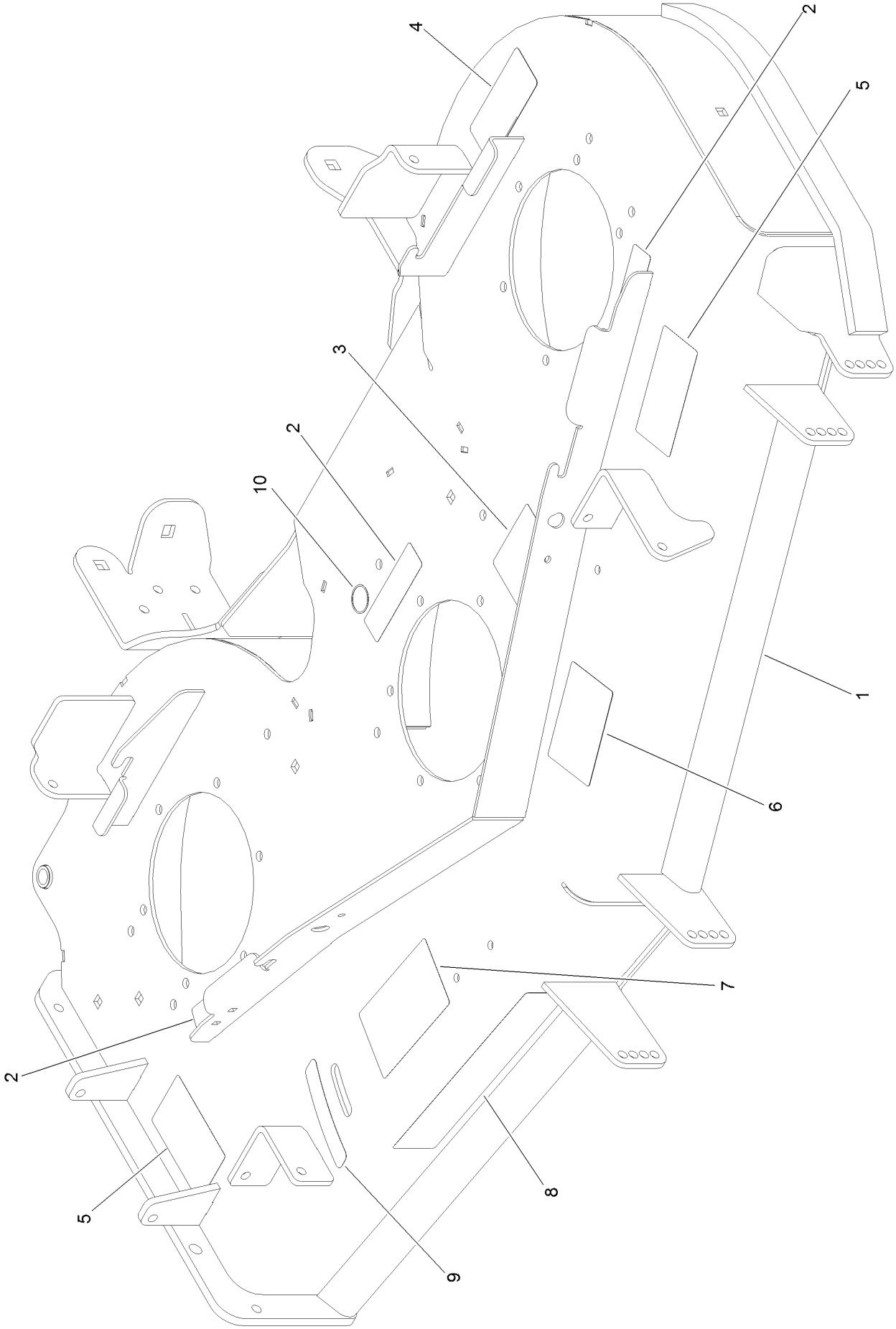

Deck Decal Assembly No. 136-8627 (continued)

Ref.	Part Number	Qty.	Description
1		1	Deck ASM ●
2	112-9028	3	Decal-Cover, Missing
3	136-5508	1	Decal-Routing, Deck Belt
4	93-7818	1	Decal-Torque, Blade Bolt
5	117-3848	2	Decal-Danger
6	127-0326	1	Decal-Scalp, Anti
7	110-2068	1	Decal-Adjustment, Baffle
8	107-1618	1	Decal
9	110-2067	1	Decal-Setting, Baffle
10	58-6520	1	Decal-Grease

● Not serviced separately

Idler Arm Assembly

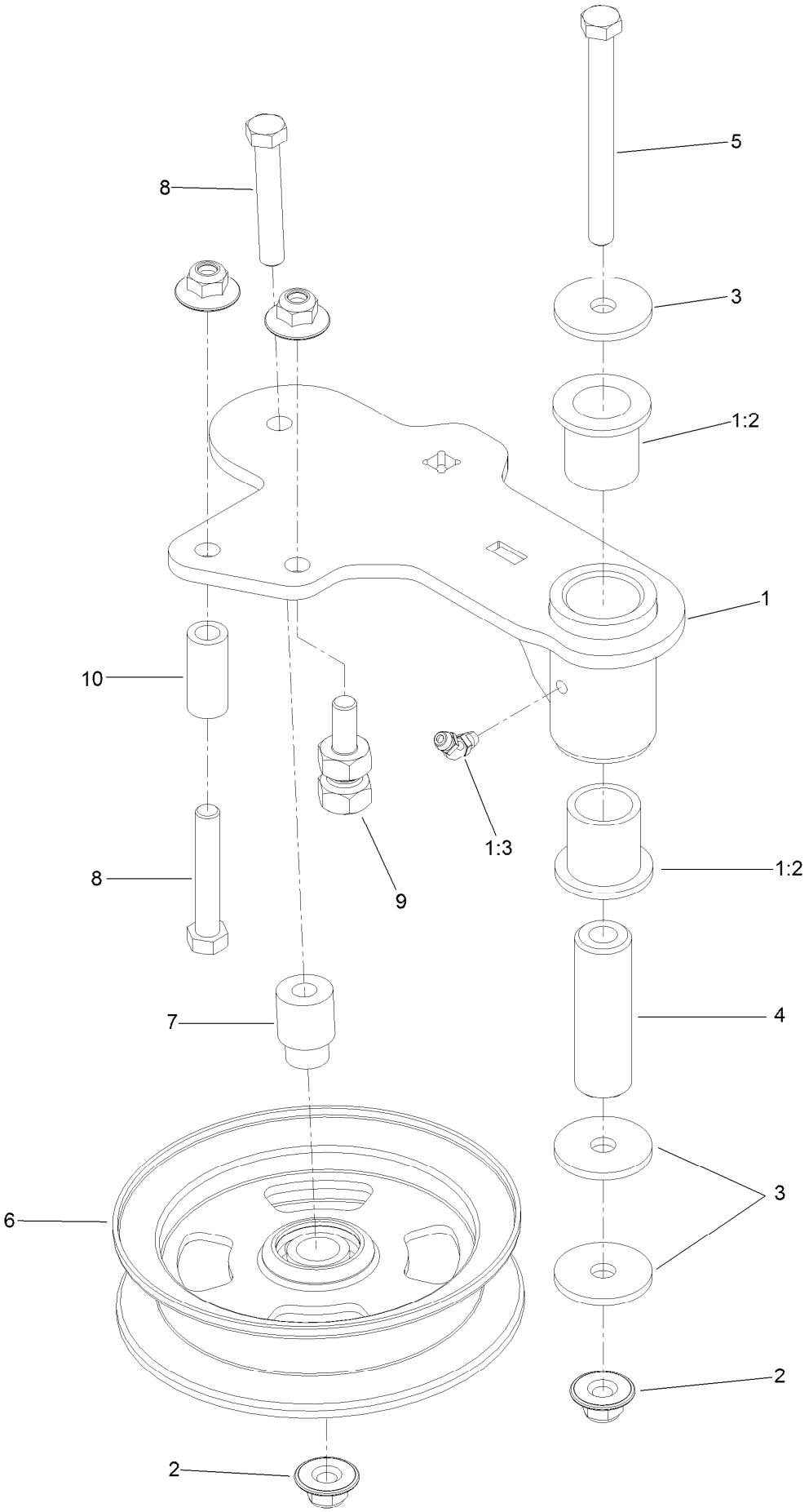

Idler Arm Assembly (continued)

Ref.	Part Number	Qty.	Description
1	114-5870	1	Idler Arm ASM
1:2	1-303514	2	Bearing-Flanged
1:3	1481	1	Fitting-Grease
2	109-6658	4	Nut-Flange, NI
3	1-213069	3	Washer
4	114-5848	1	Spacer-Plain
5	98-5961	1	Screw-HH
6	132-9425	1	Pulley-Idler, Flat
7	112-4212	1	Mount-Pulley
8	323-11	2	Screw-HH
9	132-4729	1	Anchor-Spring, Short
10	104-0151	1	Spacer

Spindle Assembly No. 127-0560

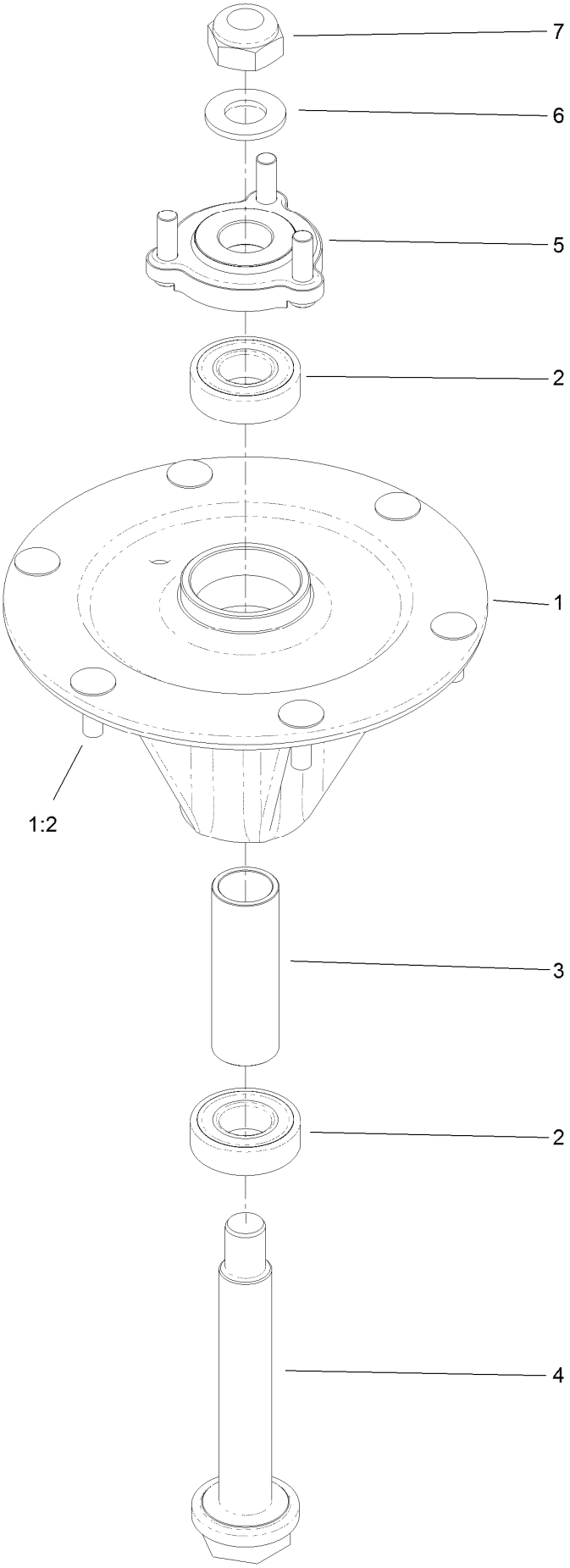

Spindle Assembly No. 127-0560 (continued)

Ref.	Part Number	Qty.	Description
1		1	Spindle Housing ASM W/Studs ●
1:2	114-8195	6	Bolt-Ribbed Neck
2	116-0720	2	Bearing-Ball
3	127-0554	1	Spacer-Bearing
4	127-0556	1	Shaft-Spindle, Ball Bearing
5	127-0557	1	Hub-Spindle (W/Studs)
6	92-5836	1	Washer
7	3296-67	1	Nut-Lock, NI

● Not serviced separately

Rubber Deflector Assembly No. 108-2792

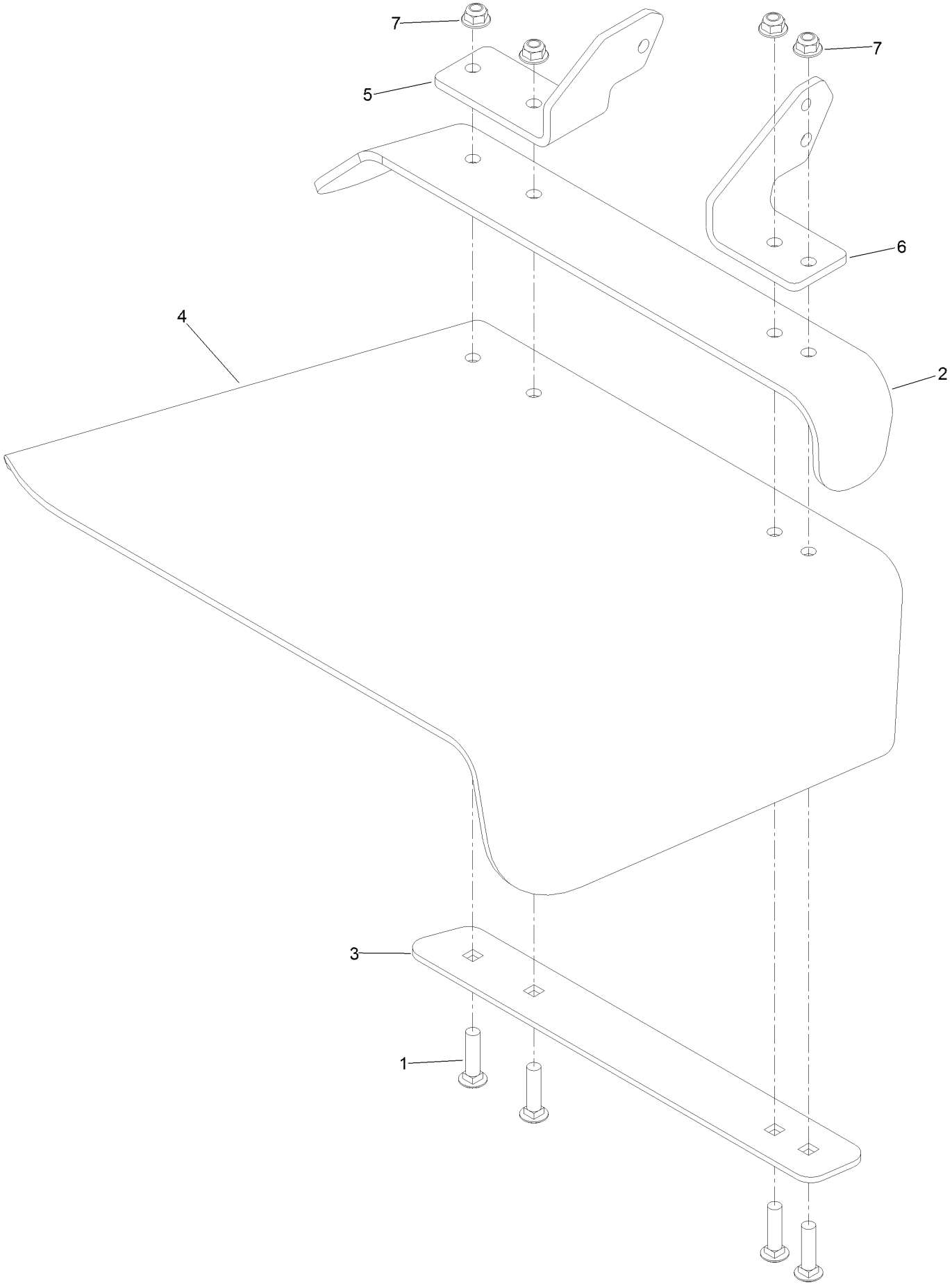

Rubber Deflector Assembly No. 108-2792 (continued)

Ref.	Part Number	Qty.	Description
1	3231-4	4	Screw-CARR
2	106-3246-01	1	Deflector
3	106-3248-03	1	Strap-Discharge
4	108-5029	1	Deflector-Rubber
5	108-4059-01	1	Plate-Hinge, Rear
6	106-3253-01	1	Plate-Hinge, Front
7	104-8301	4	Nut-HF, NI

Frame Decal Assembly

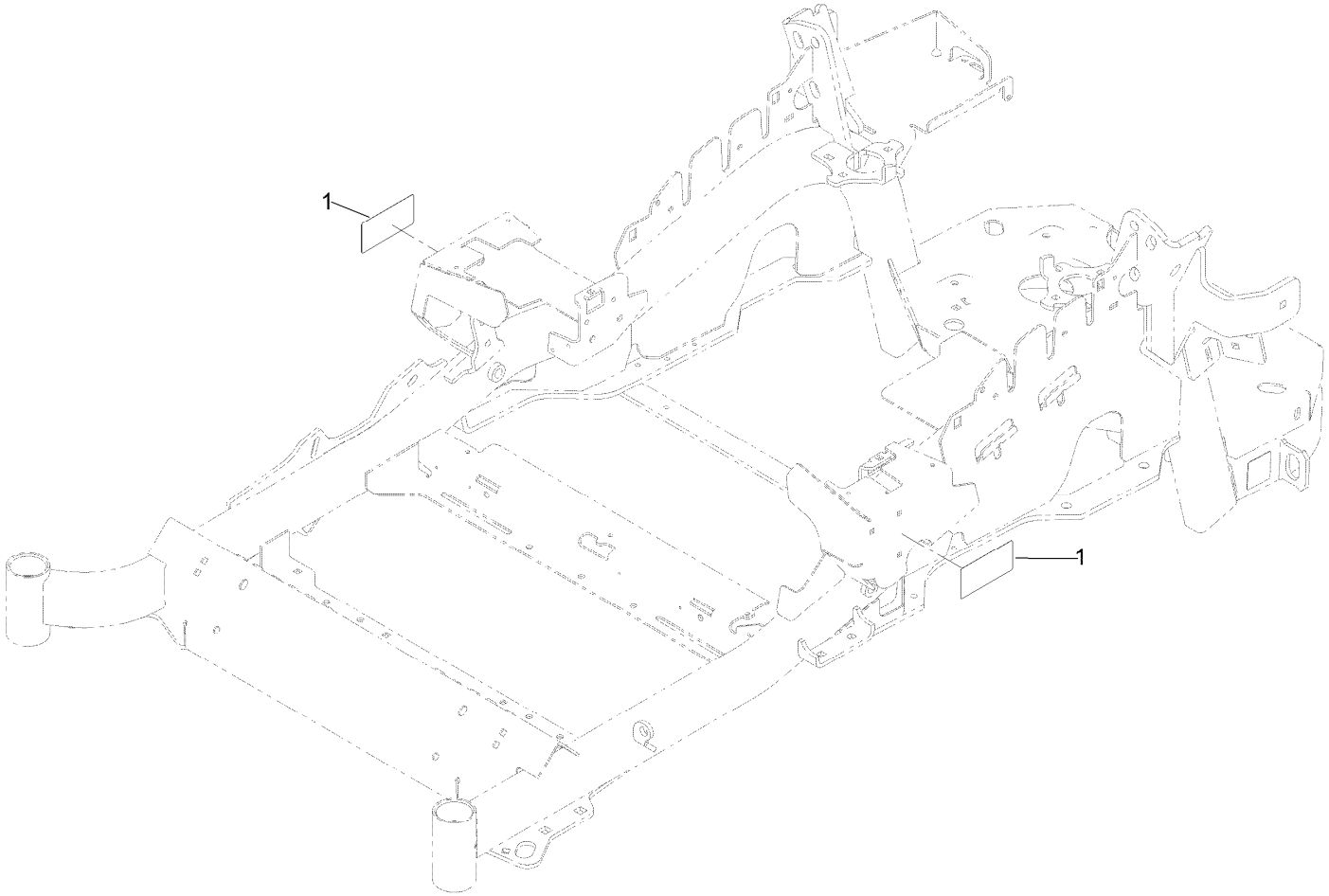

Frame Decal Assembly (continued)

Ref.	Part Number	Qty.	Description
1	120-5895	2	Decal

Attachments and Accessories

For 74919TE Z Master Professional 6000 Series Riding Mower with 132cm TURBO FORCE Side Discharge Mower

Product Name	Model/Part
Blower and Drive Kit	78552
E-Z Vac Twin Bagging System	78562
E-Z Vac DFS Collection System	78566
Deluxe Seat Kit	121-7595
Recycler Kit	115-7467
Operator Controlled Discharge Chute Kit	117-3600
Bimini Folding Shade Assembly	115-4510
Z Stand Kit	121-4811
Seat Cover W/arm rest	117-0095
Light Kit	116-1154
Hitch Kit	109-9487
Trash Holder Kit	TC26
Blade-Hi Flow, 18in	105-7781-03
Blade-Med Flow, 18in	105-7794-03
Blade-Low Flow, 18in	105-7795-03
Blade-Recycler, 18in	105-7779-03
Blade-Atomic, 18in	105-7796-03
Blade-Hi Flow, 18in (6 Pack)	108-1117
Blade-Med Flow, 18in (6 Pack)	110-0409
Blade-Lo Flow, 18in (6 Pack)	110-0406
Blade-Atomic, 18in (6 Pack)	108-1118
Blade-Recycler, 18in (6 Pack)	110-0408
Roller Striper Kit	115-7470
CE Bagger Compliance Kit	127-0337
Filter Minder Gauge	99-4664
Spark Arrestor Screen	75-6880
Anti-Scalp Kit (Trim Side)	108-4140
Turbo Baffle Kit	107-1634
Jack Kit	127-6666
Jack Mount Kit	127-6665
Trimmer Mount	137-9769
Bucket Mount Kit	137-9216
Toro Deluxe Rider Cover	490-7319
Hypr-Oil 500 (quart)	114-4713
Hypr-Oil 500 (gallon)	114-4714
Hypr-Oil 500-5 (5 gallon)	114-4715

Notes:

TORO®

Count on it.