Form No. 3424-861 Rev A

TORO®

Count on it.

Operator's Manual

PowerPlex 13in 40V MAX String Trimmer/Edger

Model No. 51481—Serial No. 319000001 and Up
Model No. 51481T—Serial No. 319000001 and Up

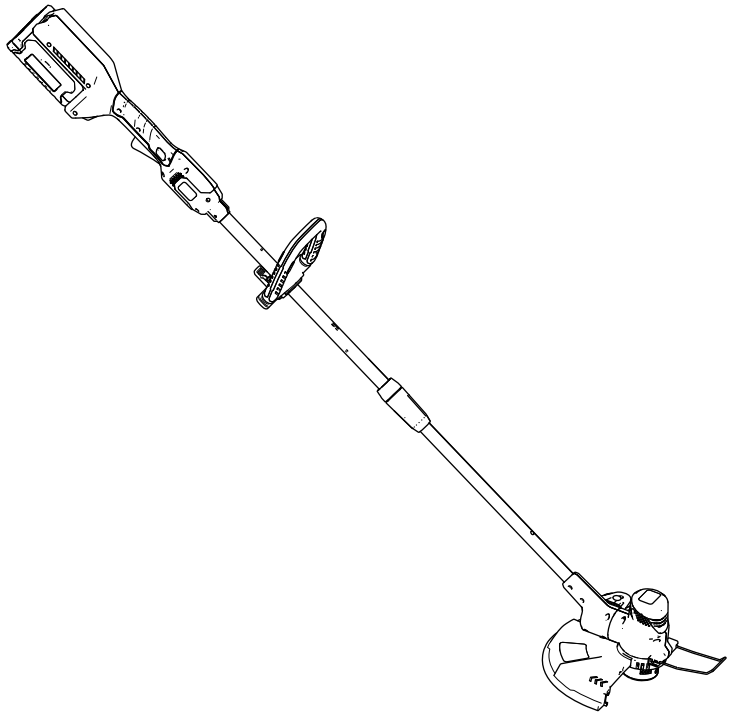

Register at www.Toro.com.
Original Instructions (EN)

3424-861 A

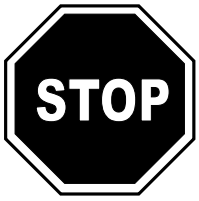

If you have questions or problems, call toll free 1-800-237-2654 (US) or 1-800-248-3258 (Canada) before returning this product.

⚠ WARNING

CALIFORNIA
Proposition 65 Warning

The power cord on this product contains lead, a chemical known to the State of California to cause birth defects or other reproductive harm. Wash hands after handling.

Use of this product may cause exposure to chemicals known to the State of California to cause cancer, birth defects, or other reproductive harm.

Important: **With your mobile device, you can scan the QR code (if equipped) on the serial number plate to access warranty, parts, and other product information.**

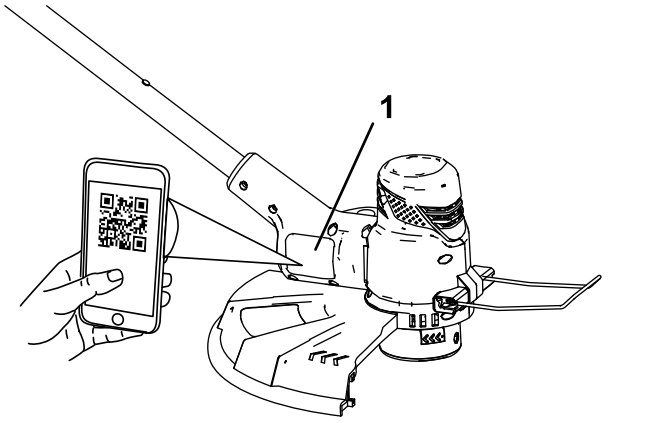

Figure 1

1. Model and serial number location

Introduction

This trimmer is intended to be used by residential homeowners to trim grass as needed outdoors. It is designed primarily to use battery pack Model 88540 (provided with Model 51481) or 88541.

Read this information carefully to learn how to operate and maintain your product properly and to avoid injury and product damage. You are responsible for operating the product properly and safely.

You may contact Toro directly at www.Toro.com for product and accessory information, help finding a dealer, the complete warranty details, or to register your product.

Model 51481T does not include a battery or a charger.

© 2018—The Toro® Company
8111 Lyndale Avenue South
Bloomington, MN 55420

Contact us at www.Toro.com.
Printed in China
All Rights Reserved

Safety

WARNING: When using electric gardening appliances, always follow basic safety precautions to reduce the risk of fire, electric shock, and personal injury, including the following:

⚠ WARNING

Failure to follow all warnings and instructions may result in electric shock, fire and/or serious personal injury.

Read all safety warnings and all instructions.

Save all warnings and instructions for future reference.

The term "power tool" in all the warnings refers to your mains-operated (corded) power tool or battery-operated (cordless) power tool.

1. **Work area safety**
   - A. **Keep the work area clean and well lit.** *Cluttered or dark areas invite accidents.*
   - B. **Do not operate power tools in explosive atmospheres, such as in the presence of flammable liquids, gasses, or dust.** *Power tools create sparks, which may ignite the dust or fumes.*
   - C. **Keep children and bystanders away while operating a power tool.** *Distractions can cause you to lose control.*
   - D. **Avoid dangerous environments.** *Do not use appliances in damp or wet locations.*
2. **Personal safety**
   - A. **Stay alert; watch what you are doing and use common sense when operating a power tool. Do not use a power tool while you are tired or under the influence of drugs, alcohol, or medication.** *A moment of inattention while operating power tools may result in serious personal injury.*
   - B. **Use personal protective equipment. Always wear eye protection.** *Protective equipment such as a dust mask, non-skid safety shoes, a hard hat, or hearing protection used for appropriate conditions will reduce personal injuries.*
   - C. **Prevent unintentional starting. Ensure the switch is in the OFF position before connecting to power source and/or battery pack and picking up or carrying the tool.** *Carrying power tools with your finger on the switch or energizing power tools that have the switch on invites accidents.*
   - D. **Do not overreach. Keep proper footing and balance at all times.** *This enables better control of the power tool in unexpected situations.*
   - E. **Dress properly. Do not wear loose clothing or jewelry. Keep your hair, clothing, and gloves away from moving parts.** *Loose clothes, jewelry, or long hair can be caught in moving parts.*
   - F. **Keep your hands and feet away from the cutting area.**
3. **Power tool use and care**
   - A. **Do not force the power tool. Use the correct power tool for your application.** *The correct power tool will do the job better and safer at the rate for which it was designed.*
   - B. **Do not use the power tool if the switch does not turn it on and off.** *Any power tool that cannot be controlled with the switch is dangerous and must be repaired.*
   - C. **Remove the battery pack from the power tool before making any adjustments, changing accessories, or storing power tools.** *Such preventive safety measures reduce the risk of starting the power tool accidentally.*
   - D. **Store idle power tools out of the reach of children and do not allow persons unfamiliar with the power tool or these instructions to operate the power tool.** *Power tools are dangerous in the hands of untrained users.*
   - E. **Store idle appliances indoors.** *When not in use, appliances should be stored indoors in a dry and high or locked-up place, out of the reach of children.*
   - F. **Maintain power tools. Check for misalignment or binding of moving parts, breakage of parts, and any other condition that may affect the operation of power tools. If damaged, have the power tool repaired before use.** *Many accidents are caused by poorly maintained power tools.*
   - G. **Maintain appliance with care.** *Keep cutting edge sharp and clean for best performance and to reduce the risk of injury. Follow instructions for lubricating and changing accessories. Keep handles dry, clean, and free from oil and grease.*
   - H. **Keep cutting tools sharp and clean.** *Properly maintained cutting tools with sharp cutting edges are less likely to bind and are easier to control.*

I. **Use the power tool in accordance with these instructions and in the manner intended for the particular type of power tool, taking into account the working conditions and the work to be performed.** *Using the power tool for operations different from those intended could result in a hazardous situation.*

J. **Keep guards in place and in working order.**

K. **Check for damaged parts.** *Before using the appliance, carefully check a guard or other part that is damaged to determine that it will operate properly and perform its intended function. Check for alignment of moving parts, binding of moving parts, breakage of parts, mounting, and any other condition that may affect its operation. A guard or other part that is damaged should be properly repaired or replaced by an authorized service center unless indicated elsewhere in this manual.*

4. **Service**

   Have your power tool serviced by a qualified repair person using only identical replacement parts. *This will ensure that the safety of the power tool is maintained.*

5. **Battery Safety**

   A. *Do not charge appliance in rain or in wet locations.*

   B. *Do not use battery-operated appliance in the rain.*

   C. *Use only the following type and size battery(ies): Toro battery Model 88540 or 88541.*

   D. *Remove or disconnect the battery before servicing, cleaning, or removing material from the gardening appliance.*

   E. *Do not dispose of the battery(ies) in a fire. The cell may explode. Check with local codes for possible special disposal instructions.*

   F. *Do not open or mutilate the battery(ies). Released electrolyte is corrosive and may cause damage to the eyes or skin. It may be toxic if swallowed.*

   G. *Exercise care in handling batteries in order not to short the battery with conducting materials such as rings, bracelets, and keys. The battery or conductor may overheat and cause burns.*

SAVE THESE INSTRUCTIONS

Safety and Instructional Decals

Safety decals and instructions are easily visible to the operator and are located near any area of potential danger. Replace any decal that is damaged or missing.



decal136-2463

136-2463

Model 51481



decal136-2464

136-2464

Model 51481T



decal136-2471

136-2471



decal136-2473

136-2473

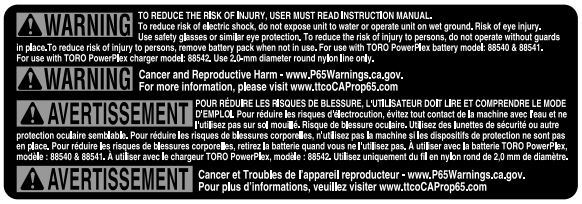

decal138-6694

138-6694

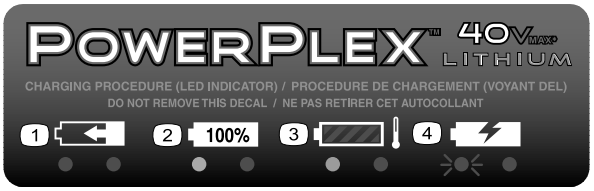

decal136-2476

136-2476

1. The battery pack is charging.
2. The battery pack is fully charged.
3. The battery pack is too warm.
4. Replace the battery pack.

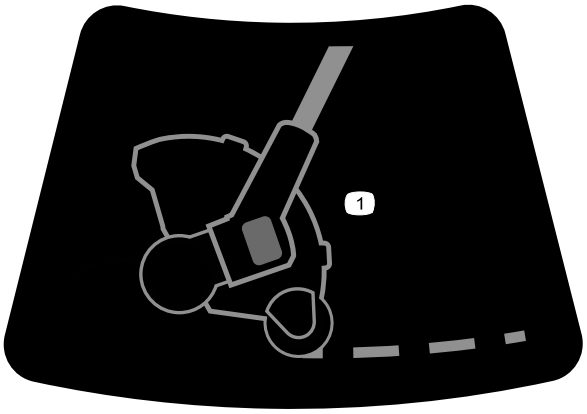

decal136-2482

136-2482

1. String trimmer edger

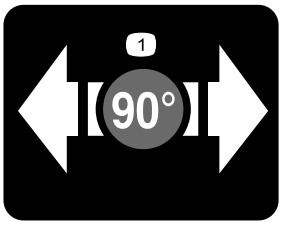

decal136-2484

136-2484

1. Press to rotate.

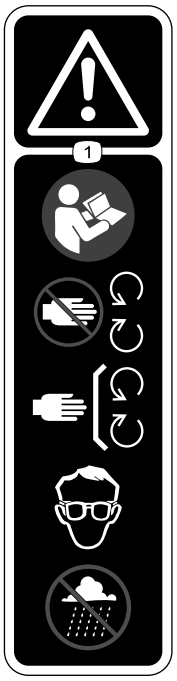

decal136-2533

136-2533

1. Warning—read the *Operator's Manual*; keep away from moving parts; keep all guards and covers in place; wear eye protection; do not operate in wet conditions.

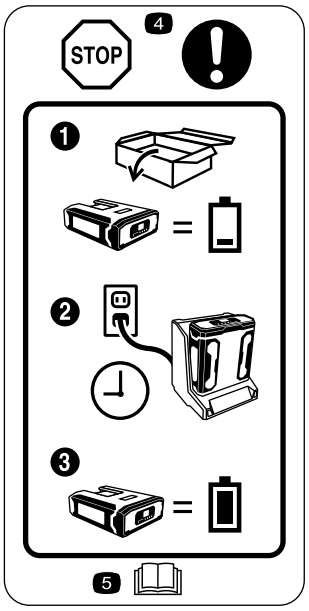

decal136-2534

136-2534

1. The battery does not come out of the box fully charged.
2. Place the battery in the battery charger.
3. Wait until the battery is fully charged before the first use.
4. Stop—follow these instructions before first use.
5. Read the *Operator's Manual*.

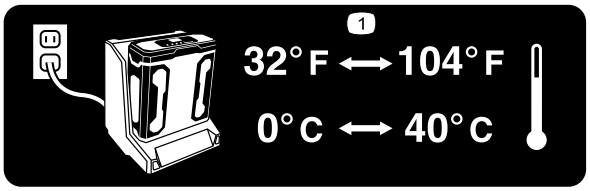

decal136-2539

136–2539

1. Charge the battery where the temperature is between 0°C and 40°C (32°F and 104°F).

Setup

Loose Parts

Use the chart below to verify that all parts have been shipped.

Procedure	Description	Qty.	Use
1	No parts required	–	Mount the battery charger (optional).
2	No parts required	–	Unfold the handle.
3	Auxiliary handle	1	Install the auxiliary handle.
4	Guard Phillips head screw	1 2	Install the guard.
5	Wire edge guard	1	Install the edge guard.

Note: The battery pack is not fully charged when you purchase it. Before using the tool for the first time, refer to Charging the Battery Pack (page 12).

1

Mounting the Battery Charger (Optional)

No Parts Required

Procedure

If desired, mount the battery charger securely on a wall using the wall-mount key holes on the back of the charger.

Mount it indoors (such as a garage or other dry place), near a power outlet, and out of the reach of children.

Refer to Figure 2 for assistance in mounting the charger.

Note: Slide and twist the charger over the appropriately positioned hardware to secure the charger in place (hardware not included).

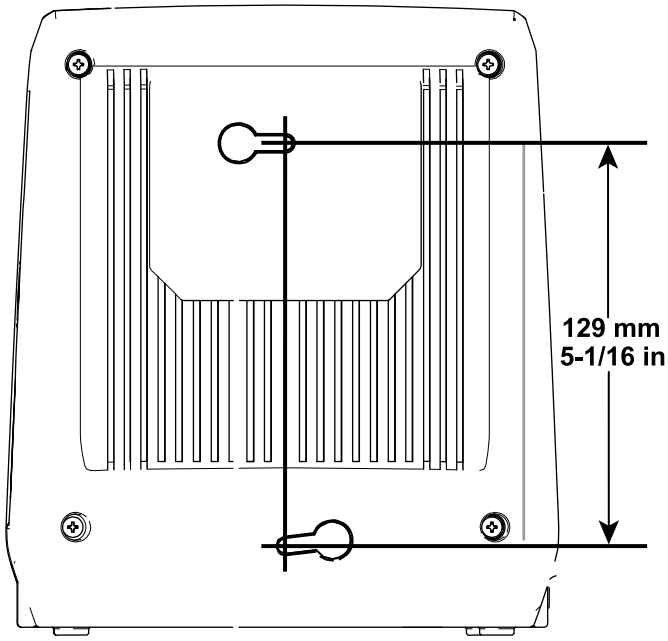

g194202

Figure 2

2

Unfolding the Handle

No Parts Required

Procedure

1. Unfold the handle (A of Figure 3).
2. Press and hold the locking button on the upper shaft, align the locking button with the slotted hole on the lower shaft, and slide the 2 shafts together. Once the slotted hole on the lower shaft is past the locking button, release the locking button, and slide the lower shaft into the upper shaft until the trimmer is at the desired height (B of Figure 3).

   Note: Use the locking button only for assembly and disassembly. You do not need to use the button to adjust the handle.
3. Tighten the lower shaft connector to secure the handle at the desired height (C of Figure 3).

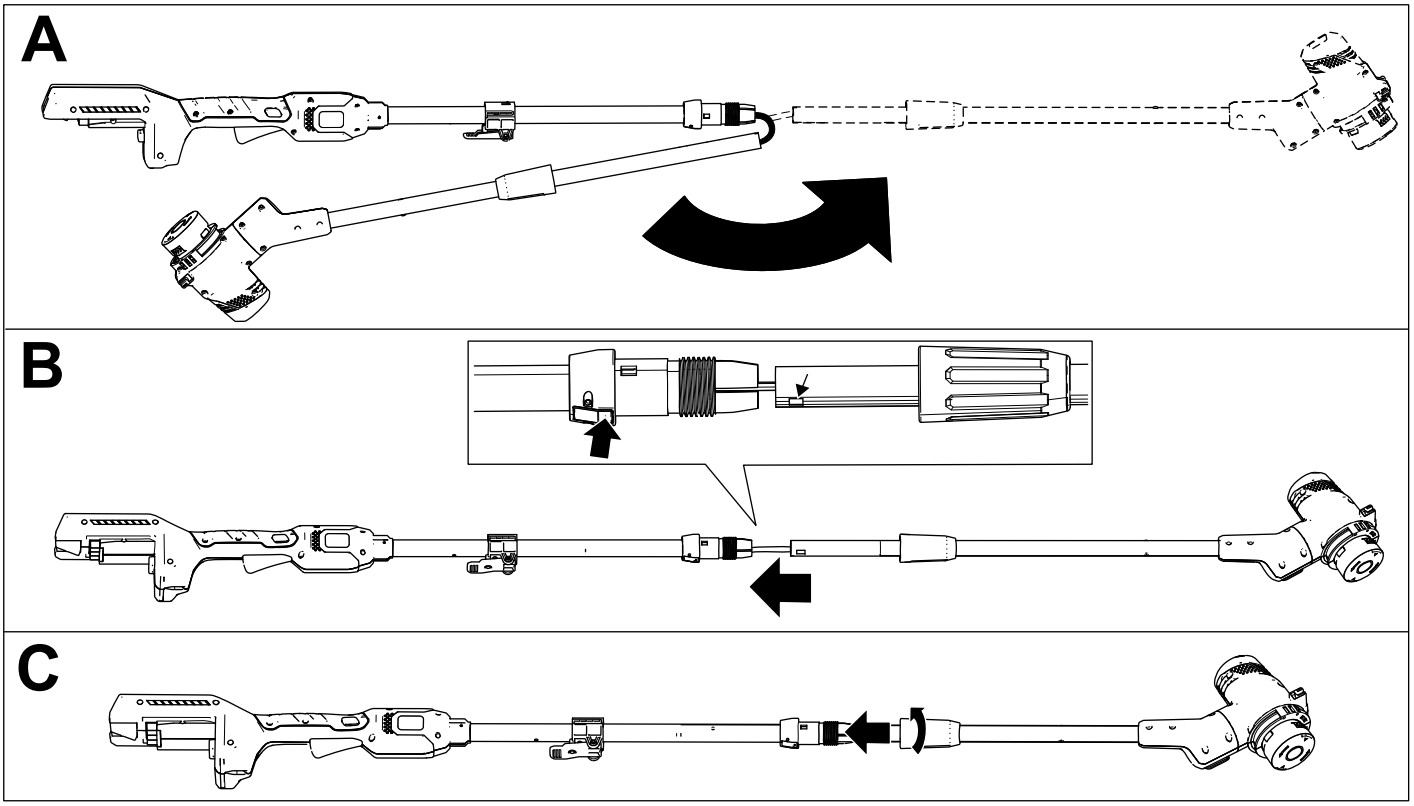

g195351

Figure 3

3

Installing the Auxiliary Handle

Parts needed for this procedure:

1	Auxiliary handle

Procedure

1. Line up the groove along the handle with the groove on the auxiliary handle and slide the auxiliary handle toward the trimmer handle (A of Figure 4).
2. Snap the handle securely into place (B of Figure 4).

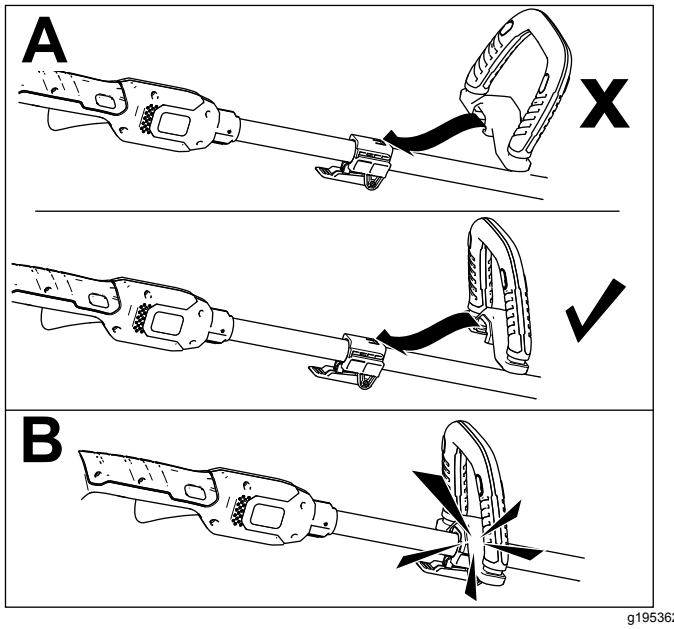

g195362

Figure 4

4

Installing the Guard

Parts needed for this procedure:

1	Guard
2	Phillips head screw

Procedure

1. Remove the 2 Phillips screws that are taped to the guard and slide the guard onto the trimmer base (A of Figure 5).
2. Secure the guard onto the base of the trimmer with the 2 Phillips screws (B of Figure 5).

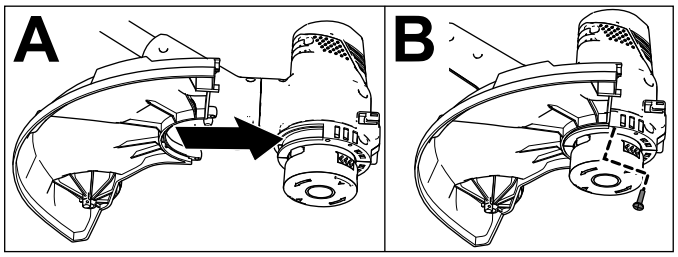

g203804

Figure 5

5

Installing the Edge Guard

Parts needed for this procedure:

1	Wire edge guard

Procedure

Slightly spread the ends of the wire edge guard apart and insert the ends into the holes in the trimmer housing as shown in Figure 6.

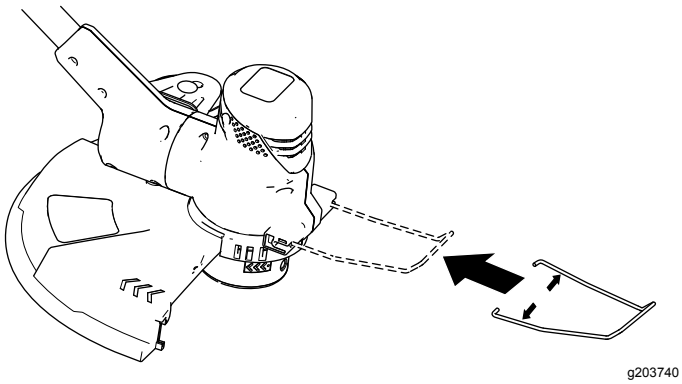

g203740

Figure 6

Product Overview

Specifications

Appropriate Temperature Ranges

Charge the battery at	0°C (32°F) to 40°C (104°F)*
Use products at	-15°C (5°F) to 60°C (140°F)
Store products at	-15°C (5°F) to 60°C (140°F)
Unplug the charger if	Below 0°C (32°F) or above 40°C (104°F)

*Charging time will increase if you do not charge the battery within this range.

Store the tool, battery pack, and battery charger in an enclosed clean, dry area.

Operation

Starting the Trimmer

1. Make sure that the vents on the trimmer are clear of any dust and debris.

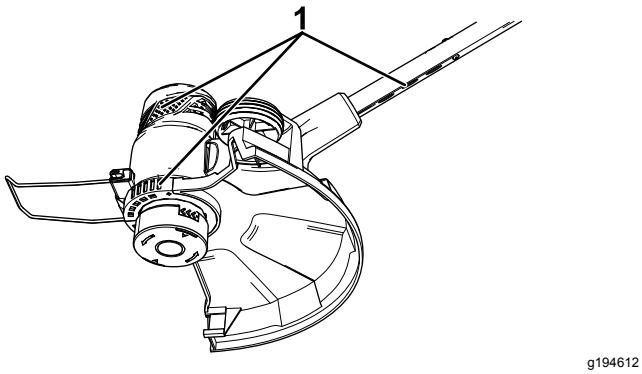

g194612

Figure 7

1. Trimmer venting areas

2. Align the cavity in the battery pack with the tongue on the handle housing (Figure 8).
3. Push the battery pack into the handle until the battery locks into the latch (Figure 8).

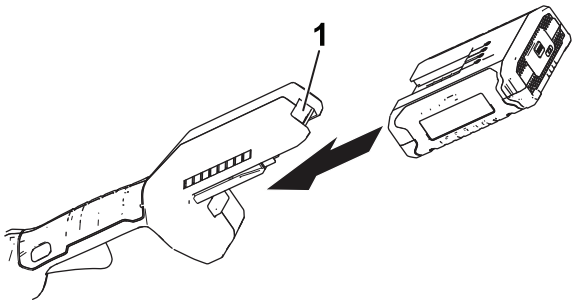

g189881

Figure 8

1. Battery latch

4. To start the trimmer, press the lockout button, then squeeze the variable-speed trigger (Figure 9).

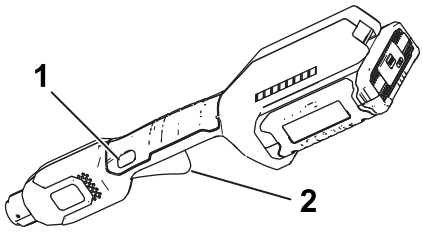

g189886

Figure 9

1. Lockout button
2. Variable-speed trigger

Shutting Off the Trimmer

To shut off the trimmer, release the trigger.

Whenever you are not using the trimmer or are transporting the trimmer to or from the work area, remove the battery pack.

Removing the Battery Pack from the Trimmer

Press the battery latch on the machine to release the battery pack and slide the battery pack out of the machine (Figure 10).

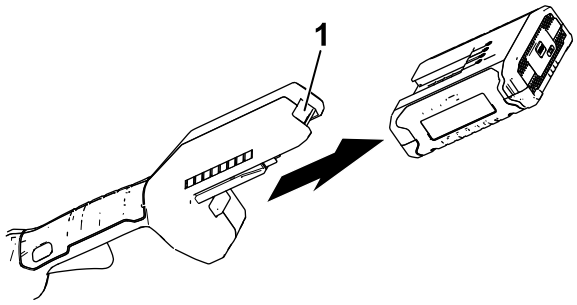

g192774

Figure 10

1. Battery latch

Charging the Battery Pack

Important: **Read all safety precautions.**

Important: **Charge the battery pack only in temperatures that are within the appropriate range; refer to Specifications (page 10).**

Note: At any time, press the battery-charge-indicator button on the battery pack to display the current charge (LED indicators).

1. Make sure that the vents on the battery pack are clear of any dust and debris.
2. Line up the cavity in the battery pack (Figure 11) with the tongue on the charger.

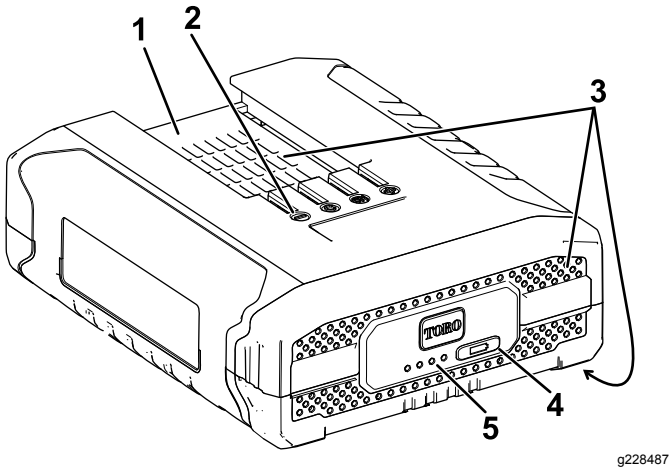

g228487

Figure 11

1. Battery pack cavity
2. Battery pack terminals
3. Battery pack venting areas
4. Battery-charge-indicator button
5. LED indicators (current charge)

3. Make sure that the vents on the battery charger are clear of any dust and debris.
4. Slide the battery pack into the charger until it is fully seated (Figure 12).

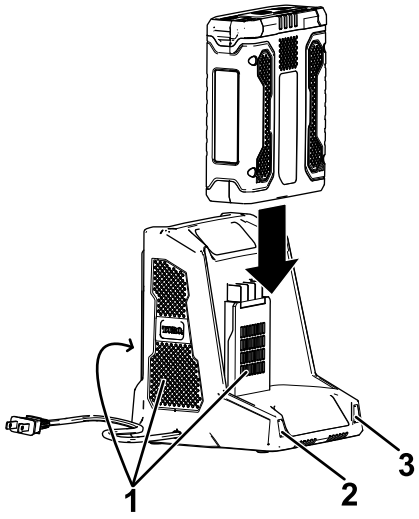

g194423

Figure 12

1. Charger venting areas
2. Left indicator light
3. Right indicator light

5. To remove the battery pack, slide the battery backward out of the charger.
6. Refer to the following table to interpret the LED indicators on the battery charger.

Left Light	Right Light	Indicates:
Off	Red	Charger is on; no battery pack inserted
Red	Red	Battery pack is charging
Green	Red	Battery pack is charged
Orange	Red	Battery pack is too warm
Red Blinking	Red	Replace the battery pack

Advancing the Line

Note: The trimmer is equipped with an auto-feed head.

1. With the trimmer running, release the switch trigger.
2. Wait a few seconds, then press the lockout button and squeeze the trigger.

   Note: The line extends approximately 6 mm (1/4 inch) with each stop and start of the trimmer until the line reaches the length of the grass deflector blade.
3. Resume trimming.

Advancing the Line Manually

Remove the battery from the trimmer, then push the button at the base of the spool retainer while pulling on the trimmer line to manually advance the line.

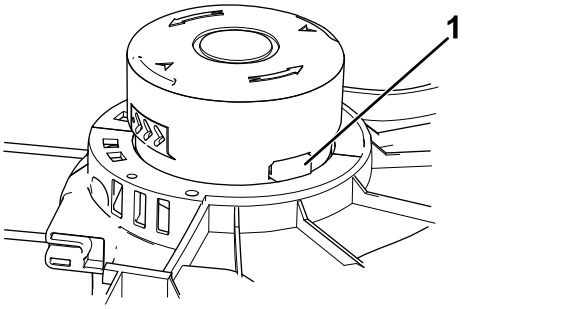

g203810

Figure 13

1. Button

Adjusting the Handle Height

1. Loosen the lower shaft connector (A of Figure 14).
2. Slide the telescoping shaft to your desired position (B of Figure 14).

   Important: **Do not slide the upper shaft over the vents on the lower shaft and do not remove the rubber bumper.**
3. Tighten the handle connector to secure the handle (C of Figure 14).

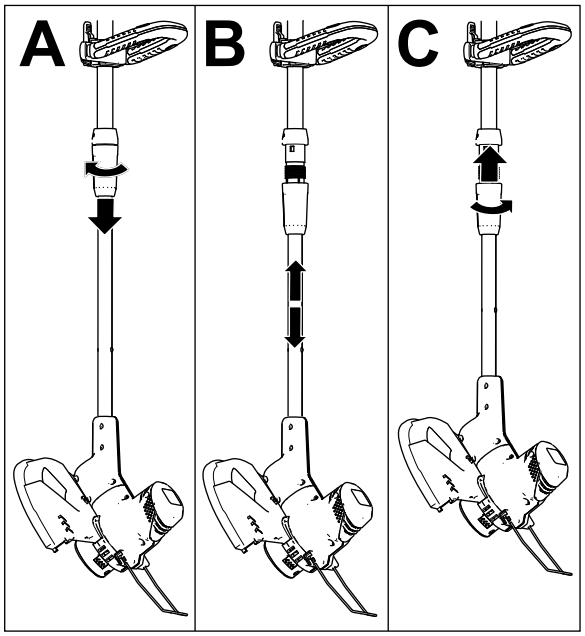

g203805

Figure 14

Adjusting the Auxiliary Handle

1. Release the auxiliary-handle latch (A of Figure 15).
2. Slide the auxiliary handle up or down to your desired height (B of Figure 15).

   Important: **Do not remove the rubber bumper.**
3. Close the auxiliary-handle latch to secure the auxiliary handle in place (C of Figure 15).

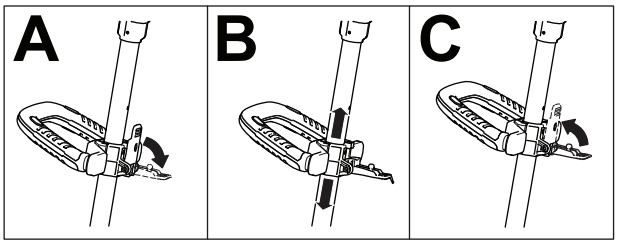

g189875

Figure 15

Trimming



g203806

Figure 16

Edging

To use the trimmer as an edger, refer to the following steps:

1. Press the rotator button, rotate the head 90°, and make sure that it locks into place (A of Figure 16).
2. Stand the trimmer on the wheel and begin edging (B of Figure 16).

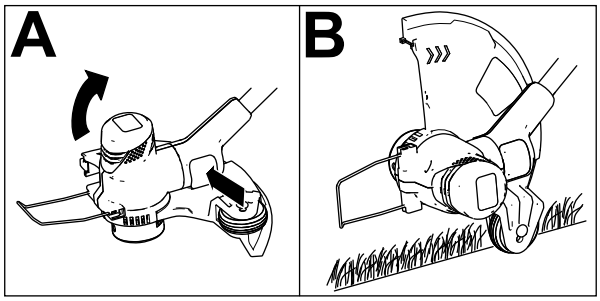

g203808

Figure 17

Operating Tips

- Keep the trimmer tilted toward the area being cut; this is the best cutting area.
- The string trimmer cuts when you move it from left to right. This prevents the trimmer from throwing debris at you.
- Use the tip of the string to do the cutting; do not force the string head into uncut grass.
- Wire and picket fences can cause the string to wear rapidly and even break. Stone and brick walls, curbs, and wood can also cause the string to wear rapidly.
- Avoid trees and shrubs. The string can easily damage tree bark, wood moldings, siding, and fence posts.

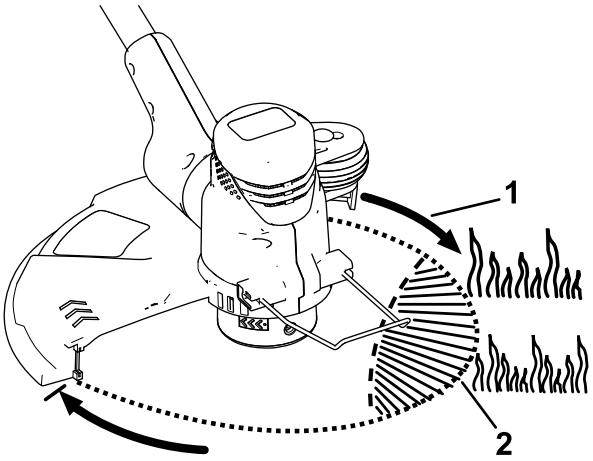

g203809

Figure 18

1. Direction of rotation
2. String path

Maintenance

After each use of the trimmer, complete the following:

1. Remove the battery from the trimmer.
2. Wipe the trimmer clean with a damp cloth. Do not hose the trimmer down or submerge it in water.

⚠ CAUTION

The line cutoff blade on the deflector is sharp and can cut you.

Do not use your hands to clean the deflector shield and blade.

3. Wipe or scrape clean the cutting head area any time there is an accumulation of debris.
4. Check and tighten all fasteners. If any part is damaged or lost, repair or replace it.
5. Brush debris away from air intake vents and exhaust on motor housing to prevent the motor from overheating.

Replacing the Spool

Use only 2 mm (0.080 inch) diameter monofilament string. Use Toro Part No. 88545 replacement string for best performance.

Important: **Using a larger diameter string causes the motor to overheat and fail.**

1. Remove the battery.
2. Push in the tabs on the side of the spool retaining cover (Figure 18).

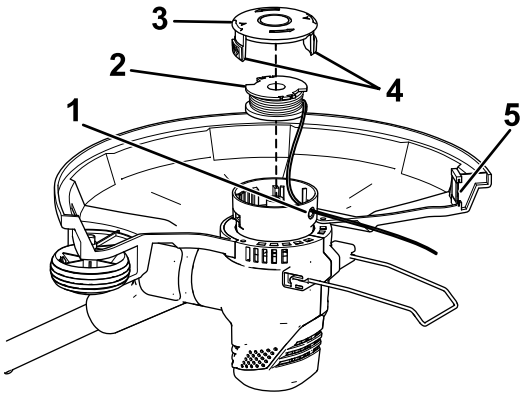

g203832

Figure 19

1. Eyelet
2. Spool
3. Spool retaining cover
4. Tabs
5. Line cutoff blade

3. Pull the spool retaining cover up to remove it and remove the spool.
4. Install the new spool so that the string aligns with the eyelet in the string head. Thread the string into the eyelet.
5. Verify that the end of the string extends approximately 152 mm (6 inches) beyond the slot.
6. Pull the string extending from the string head so that the string releases from the slot in the spool.
7. Install the spool retainer by pressing the tabs into the slots and pushing down until the spool retainer clicks into place.

Replacing the String

1. Remove the battery.
2. Remove the spool; refer to Replacing the Spool (page 15).

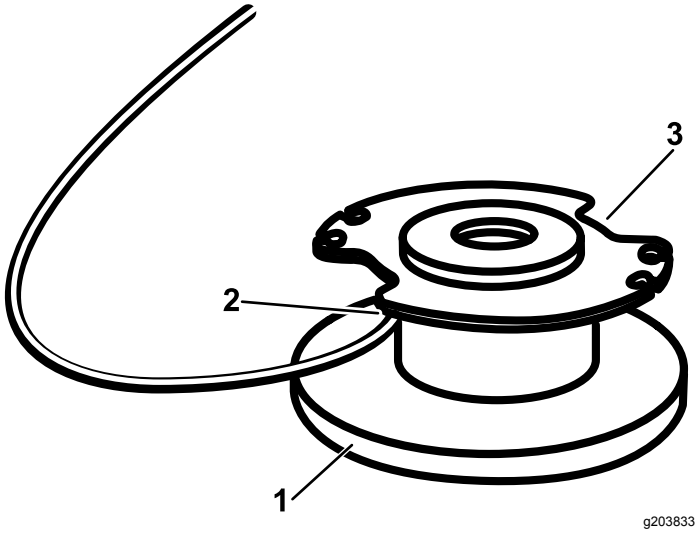

Figure 20

1. Spool
2. Anchor hole
3. Upper part of spool

Note: Remove any old string remaining on the spool.

3. The spool accepts approximately 3.9 m (13 ft) of string. **Use only 2 mm (0.080 inch) diameter monofilament string.**

   Note: Do not use any other gauge or type of string, as this could damage the trimmer.
4. Insert the string into the anchor hole (Figure 20). Wind the string onto the spool in the direction shown by the arrows on the spool.
5. Place the string in the slot on the upper spool flange, leaving about 152 mm (6 inches) extended beyond the slot.

   Note: Do not overfill. After winding the string, there should be at least 6 mm (1/4 inch) between the wound string and the outside edge of the spool.
6. Replace the spool and the spool retainer; refer to Replacing the Spool (page 15).

Storage

Important: **Store the tool, battery pack, and charger only in temperatures that are within the appropriate range; refer to Specifications (page 10).**

Important: **If you are storing the tool for a year or longer, remove the battery pack from the tool and charge the battery pack until 2 or 3 LED indicators turn blue on the battery. Do not store a fully charged or fully depleted battery. When you are ready to use the tool again, charge the battery pack until the left indicator light turns green on the charger or all 4 LED indicators turn blue on the battery.**

- Disconnect the product from the power supply (i.e., remove the plug from the power supply or the battery pack) and check for damage after use.
- Clean all foreign material from the product.
- When not in use, store the tool, battery pack, and battery charger out of the reach of children.
- Keep the tool, battery pack, and battery charger away from corrosive agents, such as garden chemicals and de-icing salts.
- To reduce the risk of serious personal injury, do not store the battery pack outside or in vehicles.
- Store the tool, battery pack, and battery charger in an enclosed clean, dry area.

Preparing the Battery Pack for Recycling

Important: **Upon removal, cover the terminals of the battery pack with heavy-duty adhesive tape. Do not attempt to destroy or disassemble the battery pack or remove any of its components. Recycle or properly dispose of lithium-ion battery packs at a battery recycling facility.**

RECYCLE RBRC Li-ion 1.800.822.8837	For more information on recycling lithium-ion battery packs and to locate the battery recycling facility closest to you, visit www.Call2Recycle.org (US and Canada only). If you are located outside of the US and Canada, please contact your authorized Toro distributor.

Troubleshooting

Perform only the steps described in these instructions. All further inspection, maintenance, and repair work must be performed by an authorized service center or a similarly qualified specialist if you cannot solve the problem yourself.

Problem	Possible Cause	Corrective Action
The tool does not start.	1. The battery is not fully installed in the tool. 2. The battery pack is not charged. 3. The battery pack is damaged. 4. There is another electrical problem with the tool.	1. Remove and then replace the battery into the tool, making sure that it is fully installed and latched. 2. Remove the battery pack from the tool and charge it. 3. Replace the battery pack. 4. Contact an Authorized Service Dealer.
The tool does not reach full power.	1. The battery pack charge capacity is too low. 2. The air vents are blocked.	1. Remove the battery pack from the tool and fully charge the battery pack. 2. Clean the air vents.
The tool is producing excessive vibration or noise.	1. There is debris on the drum area on the trimmer. 2. The spool is not properly wound.	1. Clean any debris off of the drum area. 2. Advance the line using the trigger switch and/or remove the line on the spool and wind the spool again.
The battery pack loses charge quickly.	1. The battery pack is over or under the appropriate temperature range.	1. Move the battery pack to a place where it is dry and the temperature is between 0°C (32°F) and 40°C (104°F).
The battery charger is not working.	1. The battery charger is over or under the appropriate temperature range. 2. The outlet that the battery charger is plugged into does not have power.	1. Unplug the battery charger and move it to a place where it is dry and the temperature is between 0°C (32°F) and 40°C (104°F). 2. Contact your licensed electrician to repair the outlet.
The battery pack shows only 3 LED indicators after only a few seconds of using a fully charged battery.	1. This is a normal occurrence.	1. Stop the tool and press the battery-charge-indicator button or the remove the battery from the tool to display the actual battery charge.
All 4 LED indicators are blinking on the battery pack after you press the battery-charge-indicator button on the battery pack and the current charge displays (when the battery pack is not in use).	1. The battery pack is over or under the appropriate temperature range.	1. Move the battery pack to a place where it is dry and the temperature is between 0°C (32°F) and 40°C (104°F).
All 4 LED indicators are blinking on the battery pack after releasing the trigger (when the battery pack is in use).	1. The battery pack is over or under the appropriate temperature range.	1. Move the battery pack to a place where it is dry and the temperature is between 0°C (32°F) and 40°C (104°F).
2 LED indicators are blinking on the battery pack after you press the battery-charge-indicator button on the battery pack and the current charge displays (when the battery pack is not in use).	1. There is a difference in voltage between cells in the battery pack.	1. Place the battery on the charger until it is fully charged.
2 LED indicators are blinking on the battery pack after releasing the trigger (when the battery pack is in use).	1. There is a difference in voltage between cells in the battery pack.	1. Place the battery on the charger until it is fully charged.

Problem	Possible Cause	Corrective Action
1 LED indicator is blinking on the battery pack.	1. The battery pack voltage is low.	1. Place the battery pack on the charger.
It is difficult to remove the battery pack from the tool.	1. The battery pack/tool is new or there is corrosion in the battery terminals and/or the terminals on the tool.	1. Clean the terminals on the battery pack and the tool. Then apply dielectric grease to the battery terminals; do not use any other type of lubricant as it can damage the terminals.

California Proposition 65 Warning Information

What is this warning?

You may see a product for sale that has a warning label like the following:



WARNING: Cancer and Reproductive Harm—www.p65Warnings.ca.gov.

What is Prop 65?

Prop 65 applies to any company operating in California, selling products in California, or manufacturing products that may be sold in or brought into California. It mandates that the Governor of California maintain and publish a list of chemicals known to cause cancer, birth defects, and/or other reproductive harm. The list, which is updated annually, includes hundreds of chemicals found in many everyday items. The purpose of Prop 65 is to inform the public about exposure to these chemicals.

Prop 65 does not ban the sale of products containing these chemicals but instead requires warnings on any product, product packaging, or literature with the product. Moreover, a Prop 65 warning does not mean that a product is in violation of any product safety standards or requirements. In fact, the California government has clarified that a Prop 65 warning "is not the same as a regulatory decision that a product is 'safe' or 'unsafe.'" Many of these chemicals have been used in everyday products for years without documented harm. For more information, go to https://oag.ca.gov/prop65/faqs-view-all.

A Prop 65 warning means that a company has either (1) evaluated the exposure and has concluded that it exceeds the "no significant risk level"; or (2) has chosen to provide a warning based on its understanding about the presence of a listed chemical without attempting to evaluate the exposure.

Does this law apply everywhere?

Prop 65 warnings are required under California law only. These warnings are seen throughout California in a wide range of settings, including but not limited to restaurants, grocery stores, hotels, schools, and hospitals, and on a wide variety of products. Additionally, some online and mail order retailers provide Prop 65 warnings on their websites or in catalogs.

How do the California warnings compare to federal limits?

Prop 65 standards are often more stringent than federal and international standards. There are various substances that require a Prop 65 warning at levels that are far lower than federal action limits. For example, the Prop 65 standard for warnings for lead is 0.5 µg/day, which is well below the federal and international standards.

Why don't all similar products carry the warning?

- Products sold in California require Prop 65 labelling while similar products sold elsewhere do not.
- A company involved in a Prop 65 lawsuit reaching a settlement may be required to use Prop 65 warnings for its products, but other companies making similar products may have no such requirement.
- The enforcement of Prop 65 is inconsistent.
- Companies may elect not to provide warnings because they conclude that they are not required to do so under Prop 65; a lack of warnings for a product does not mean that the product is free of listed chemicals at similar levels.

Why does Toro include this warning?

Toro has chosen to provide consumers with as much information as possible so that they can make informed decisions about the products they buy and use. Toro provides warnings in certain cases based on its knowledge of the presence of one or more listed chemicals without evaluating the level of exposure, as not all the listed chemicals provide exposure limit requirements. While the exposure from Toro products may be negligible or well within the "no significant risk" range, out of an abundance of caution, Toro has elected to provide the Prop 65 warnings. Moreover, if Toro does not provide these warnings, it could be sued by the State of California or by private parties seeking to enforce Prop 65 and subject to substantial penalties.



Count on it.