Form No. 3424-956 Rev A

Rollover Protection System Kit

Serial Range 402000000 and After Z Master® Professional 7500-D Series Riding Mower

Model No. 135-5927

Installation Instructions

Safety

Rollover Protection System (ROPS) Safety

- **Do not** remove the roll bar from the machine.
- Ensure that the seat belt is attached and that you can release it quickly in an emergency.
- Always wear your seat belt when the roll bar is up.
- Check carefully for overhead obstructions and do not contact them.
- Keep the roll bar in safe operating condition by thoroughly inspecting it periodically for damage and keeping all the mounting fasteners tight.
- Replace a damaged roll bar. Do not repair or alter it.

© 2018—The Toro® Company
8111 Lyndale Avenue South
Bloomington, MN 55420

Register at www.Toro.com.

Original Instructions (EN)
Printed in the USA
All Rights Reserved
3424-956 A

Safety and Instructional Decals

Safety decals and instructions are easily visible to the operator and are located near any area of potential danger. Replace any decal that is damaged or missing.

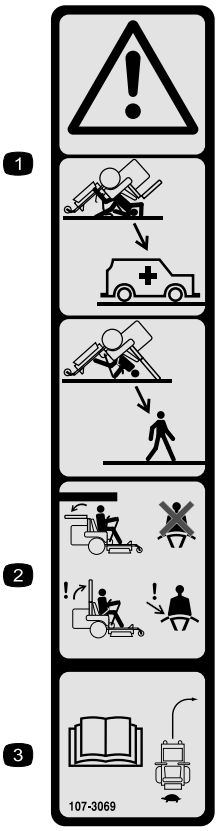

decal107-3069

107-3069

1. Warning–there is no rollover protection when the roll bar is down.
2. To avoid injury or death from a rollover accident, keep the roll bar in the raised and locked position and wear the seat belt. Lower the roll bar only when absolutely necessary; do not wear the seat belt when the roll bar is down.
3. Read the *Operator's Manual*; drive slowly and carefully.

Installation

Loose Parts

Use the chart below to verify that all parts have been shipped.

Procedure	Description	Qty.	Use
1	No parts required	–	Prepare the machine.
2	No parts required	–	Remove the rollover protection system (ROPS).
3	Right roll bar leg Left roll bar leg Spacer Roll bar assembly Spring pin assembly Locknut (1/2 inch) Carriage bolt (1/2 x 3-1/2 inches) Spring disc washer Hex-head bolt (1/2 x 3-3/4 inches) Spacer bracket Leaf spring Rivet	1 1 2 1 2 6 2 4 4 2 2 4	Install the rollover protection system (ROPS).
4	No parts required	–	Raise the roll bar.

1

Preparing the Machine

No Parts Required

Procedure

1. Park the machine on a level surface.
2. Move the motion-control levers to the NEUTRAL-LOCK position.
3. Engage the parking brake.
4. Shut off the engine and remove the key.

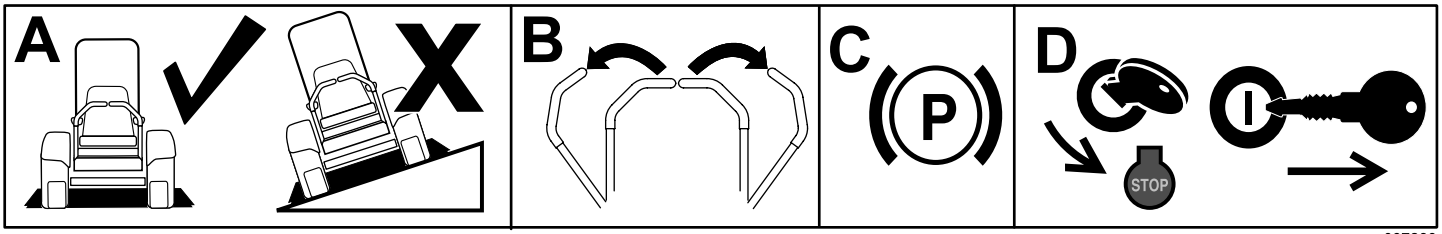

g037289

g037289

Figure 1

2

Removing the Rollover Protection System (ROPS)

No Parts Required

Procedure

1. Disconnect the negative battery cable.
2. Remove the engine hood assembly.
3. Remove the upper roll bar assembly.
4. Remove the fuel vent lines from the rubber grommets in the rear side of the roll bar legs.

   Carefully remove the rubber grommets.
5. Tilt the seat assembly forward to access the lower roll bar screws.
6. Remove the 4 screws (1/2 x 3-1/4 inches) securing the diagonal radiator supports to the roll bar.
7. Remove and discard the hardware attaching the roll bar to the frame.

   Note the position and orientation of the cone washers used with the screws. Also note the position and orientation of the flat spacers between the roll bar legs and frame bracket.
8. Remove the roll bar from the machine.

3

Installing the Rollover Protection System (ROPS)

Parts needed for this procedure:

1	Right roll bar leg
1	Left roll bar leg
2	Spacer
1	Roll bar assembly
2	Spring pin assembly
6	Locknut (1/2 inch)
2	Carriage bolt (1/2 x 3-1/2 inches)
4	Spring disc washer
4	Hex-head bolt (1/2 x 3-3/4 inches)
2	Spacer bracket
2	Leaf spring
4	Rivet

Procedure

⚠ WARNING

To avoid injury or death from rollover, keep the roll bar in the fully raised, locked position and use the seat belt.

Ensure that the seat is secured to the machine.

⚠ WARNING

There is no rollover protection when the roll bar is in the down position.

- **Lower the roll bar only when absolutely necessary.**
- **Do not wear the seat belt when the roll bar is in the down position.**
- **Drive slowly and carefully.**
- **Raise the roll bar as soon as clearance permits.**
- **Check carefully for overhead clearances (i.e., branches, doorways, electrical wires) before driving under any objects and do not contact them.**

1. Install the 2 rubber grommets removed in step 4 of **Removing the Rollover Protection System (ROPS)**, into the new roll bar legs.
2. Insert the fuel vent lines into the grommets.
3. Secure the 2 spring pin assemblies to the roll bar assembly (Figure 2).
4. Secure the 2 spacer brackets to the roll bar legs using 4 locknuts (1/2 inch), 4 spring disc washers, and 4 and hex-head bolts (1/2 x 3-3/4 inches) as shown in Figure 2.
5. Secure the roll bar assembly to the roll bar legs using 2 carriage bolts (1/2 x 3-1/2 inches), 2 spacers, and 2 locknuts (1/2 inch) as shown in Figure 2.
6. Tighten the 2 carriage bolts (1/2 x 3-1/2 inches) and 4 hex-head bolts (1/2 x 3-3/4 inches).

   Torque the 4 hex-head bolts (1/2 x 3-3/4 inches) to 142 N·m (105 ft-lb).
7. Secure the 2 leaf springs to the roll bar legs using the 4 rivets (Figure 2).
8. Install the engine hood assembly.
9. Return the seat to the operating position.
10. Connect the negative battery cable.

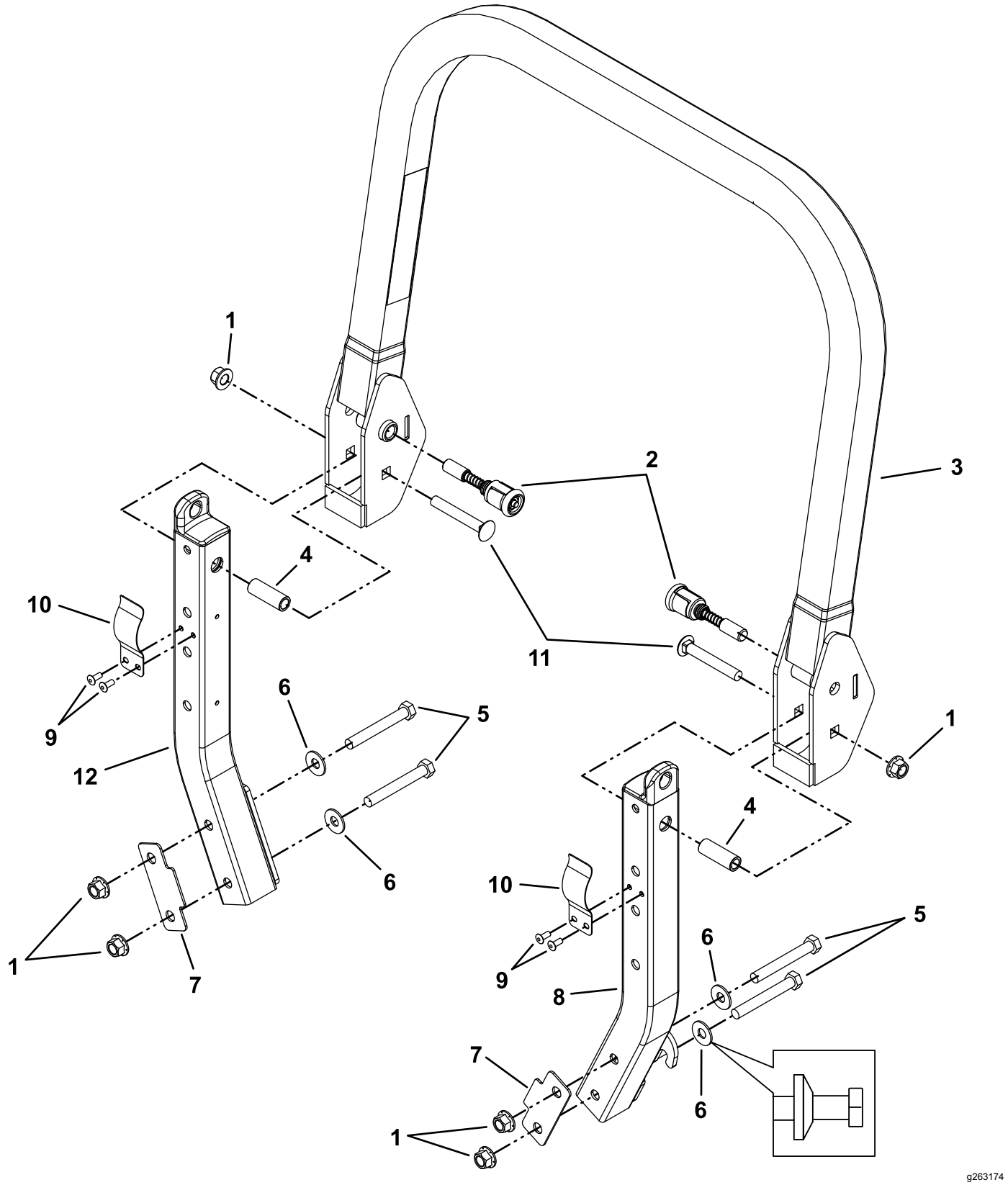

Figure 2

1. Locknut (1/2 inch)
2. Spring pin assembly
3. Roll bar assembly
4. Spacer
5. Hex-head bolt (1/2 x 3-3/4 inches)
6. Spring disc washer
7. Spacer bracket
8. Left roll bar leg
9. Rivet
10. Leaf spring
11. Carriage bolt (1/2 x 3-1/2 inches)
12. Right roll bar leg

4

Raising the Roll Bar

No Parts Required

Procedure

1. Raise the roll bar to the operate position, rotate the knobs so that they move partially into the grooves (Figure 3).
2. Raise the roll bar to the full upright position while pushing on the upper roll bar and the pins snap into position when the holes align with the pins (Figure 3).

   Important: **Always use the seat belt with the roll bar in the raised position.**

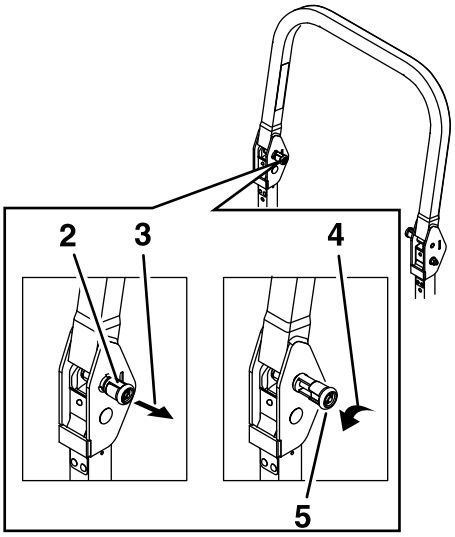

g225804

Figure 3

1. Upper part of the roll bar
2. Knob in the latched position
3. Pull the knob to unlatch.
4. Rotate the knob out 90° to hold it in the unlatched position.
5. Knob in the unlatched position

3. Push on the roll bar and ensure that both pins are engaged (Figure 4).

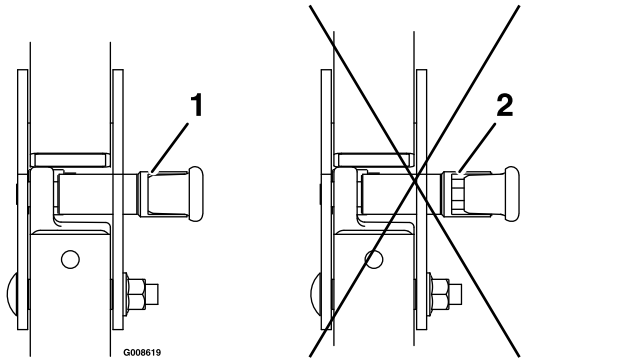

g008619

Figure 4

1. Engaged
2. Partially engaged—do not operate the machine with the ROPS in this position.