Form No. 3411-895 Rev B

TORO®

Count on it.

Parts Catalog

# Workman® MDX-D

## Utility Vehicle

**Model No. 07236TC—Serial No. 400000000 and Up**

Register at www.Toro.com.
Original Instructions (EN)

CE

*3411-895* B

# Ordering Replacement Parts

To order replacement parts, please supply the part number, the quantity, and the description of each part desired.

### Understanding Reference Numbers

Each identified part in an illustration has a reference number. The reference number for a part also appears in the parts list, along with other information about the part.

This catalog uses two special reference number formats, one to indicate parts in a service assembly and another to indicate the quantity of a given part in an illustration.

### Service Assembly Reference Numbers

Parts in service assemblies have reference numbers in the form a:b. The a represents the reference number of the entire service assembly and the b represents a sequential number unique to each part within the service assembly.

For example, a wheel assembly might be identified by reference number 6, the tire by 6:1, the valve by 6:2, and the wheel by 6:3. When you order the assembly identified by reference number 6, you receive all parts identified by reference numbers 6:1,6:2, and 6:3. However, you may also order any part individually. Reference numbers of this type appear in illustration and in parts lists.

### Reference Numbers Indicating Quantity

In an illustration, if a reference number indicates more than one part, the reference number has the form nX y. The n represents the quantity of the part, the X is the multiplication symbol, and the y represents the reference number.

For example, in an illustration, the reference number 2X 37 means that two of the parts identified by reference number 37 are indicated.

# Contents


Front Frame and Suspension Assembly . . . 4
Rear Frame and Suspension Assembly . . . 5
Diesel Engine Mount Assembly . . . 6
Front Brake Assembly . . . 7
Master Cylinder Assembly No. 104-6782 . . . 8
Brake Caliper Assembly No. 127-7424 . . . 9
Rear Brake Assembly . . . 10
RH Rear Brake Assembly No. 114-8331 . . . 11
LH Rear Brake Assembly No. 114-8332 . . . 12
Steering Assembly . . . 13
Pedal Assembly . . . 14
Shifter Assembly . . . 15
Hood and Fender Assembly . . . 16
Dash Assembly . . . 17
Control Panel Assembly . . . 18
Seatbase Assembly . . . 19
Cargo Bed Assembly . . . 20
Cargo Bed and Tailgate Service Assembly No. 133-0560 . . . 21
Engine, Primary Clutch and Exhaust Assembly . . . 22
Primary Clutch Assembly No. 119-9610 . . . 23
Air Cleaner and Throttle Cable Assembly . . . 24
Air Cleaner Assembly No. 119-9714 . . . 25
Radiator Assembly . . . 26
Rear Axle Drive System Assembly . . . 27
Transaxle Assembly No. 119-0760 . . . 28
Secondary Clutch Assembly No. 119-6011 . . . 30
Battery Assembly . . . 31
Electrical Assembly . . . 32
Fuel Tank Assembly . . . 33
Crankcase Assembly . . . 34
Oil Pan, Oil Pump and Dipstick Assembly . . . 35
Cylinder Head Assembly . . . 36
Gear Case and Oil Filter Cartridge Assembly . . . 37
Cylinder Head Cover Assembly . . . 38
Main Bearing Case Assembly . . . 39
Camshaft and Idle Gear Shaft Assembly . . . 40
Piston and Crankshaft Assembly . . . 41
Fuel Camshaft Assembly . . . 42
Idle Apparatus and Fuel Pump Cover Assembly . . . 43
Injection Pump Assembly . . . 44
Governor Assembly . . . 45
Stop Solenoid and Speed Control Plate Assembly . . . 46
Nozzle Holder and Glow Plug Assembly . . . 47
Nozzle Holder Assembly . . . 48
Alternator, Pulley and Fan Assembly . . . 50
Alternator Components Assembly . . . 51
Starter and Flywheel Assembly . . . 52
Starter Component Assembly . . . 53
Water Flange and Thermostat Assembly . . . 54
Water Pump and Water Pipe Assembly . . . 55
Valve and Rocker Arm Assembly . . . 56
Inlet and Exhaust Manifold Assembly . . . 57
Miscellaneous Engine Parts . . . 58
Attachments and Accessories . . . 59



**© 2018—The Toro® Company**


**8111 Lyndale Avenue South**
**Bloomington, MN 55420**





**Contact us at www.Toro.com.**
**Printed in the USA.**


**All Rights Reserved**

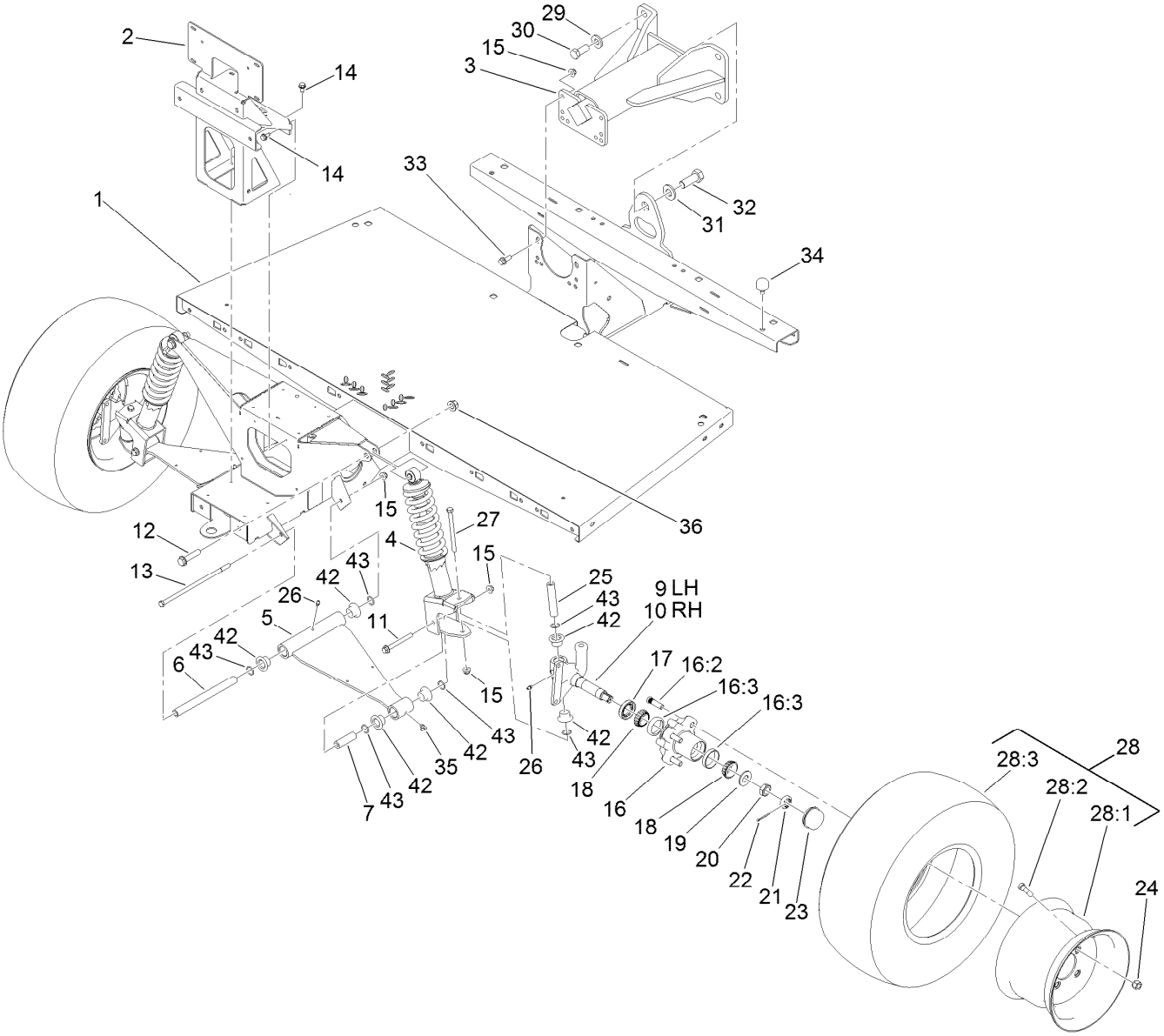


# Front Frame and Suspension Assembly

| Ref. | Part Number | Qty. | Description |
|---|---|---|---|
| 1 | 132-6735-03 | 1 | Frame-Front |
| 2 | 132-6736-03 | 1 | Support-Bumper |
| 3 | 99-7700 | 1 | Yoke-Pivot |
| 4 | 132-6791 | 2 | Strut ASM |
| 5 | 132-6747-03 | 2 | Arm-Control |
| 6 | 133-0595 | 2 | Sleeve-Control Arm, Inner |
| 7 | 131-8583 | 2 | Sleeve-Control Arm, Outer |
| 9 | 127-8825-03 | 1 | Spindle-LH |
| 10 | 127-8826-03 | 1 | Spindle-RH |
| 11 | 116-4701 | 2 | Screw-HHF |
| 12 | 3234-46 | 2 | Screw-HHF |
| 13 | 325-39 | 2 | Screw-HH |
| 14 | 32144-70 | 6 | Screw-HWHTF |
| 15 | 104-8301 | 8 | Nut-HF, NI |
| 16 | 127-8851 | 2 | Front Hub ASM |
| 16:2 | 10-6830 | 4 | Stud-Type, Drive |
| 16:3 | 254-72 | 2 | Bearing-Cup, Tapered |
| 17 | 112-1690 | 2 | Seal-Oil |
| 18 | 254-94 | 4 | Bearing-Cone, Tapered |
| 19 | 93-0309 | 2 | Washer-Tab |
| 20 | 3220-7 | 2 | Nut-Jam |

| Ref. | Part Number | Qty. | Description |
|---|---|---|---|
| 21 | 93-0307 | 2 | Nut-Lock, Retainer |
| 22 | 3272-12 | 2 | Pin-Cotter |
| 23 | 241-119 | 2 | Cap-Dust |
| 24 | 242-50 | 8 | Nut-Lug |
| 25 | 131-8582 | 2 | Sleeve-Kingpin |
| 26 | 302-5 | 4 | Fitting-Grease |
| 27 | 323-38 | 2 | Screw-HH |
| 28 | 133-0579 | 2 | Wheel And Tire ASM |
| 28:1 | 133-0590 | 1 | Wheel |
| 28:2 | 127-7435 | 1 | Tire |
| 28:3 | 232-27 | 1 | Stem-Valve |
| 29 | 99-7667 | 4 | Washer-Flat |
| 30 | 327-4 | 4 | Screw-HH |
| 31 | 87-3060 | 1 | Washer-Hardened |
| 32 | 328-24 | 1 | Screw-HH |
| 33 | 3234-11 | 4 | Screw-HHF |
| 34 | 87-2440 | 1 | Bumper-Rubber |
| 35 | 302-60 | 2 | Fitting-Grease |
| 36 | 99-5107 | 4 | Nut-Lock |
| 42 | 133-0643 | 12 | Bushing-Flange, O-Ring |
| 43 | 237-54 | 12 | O-Ring |

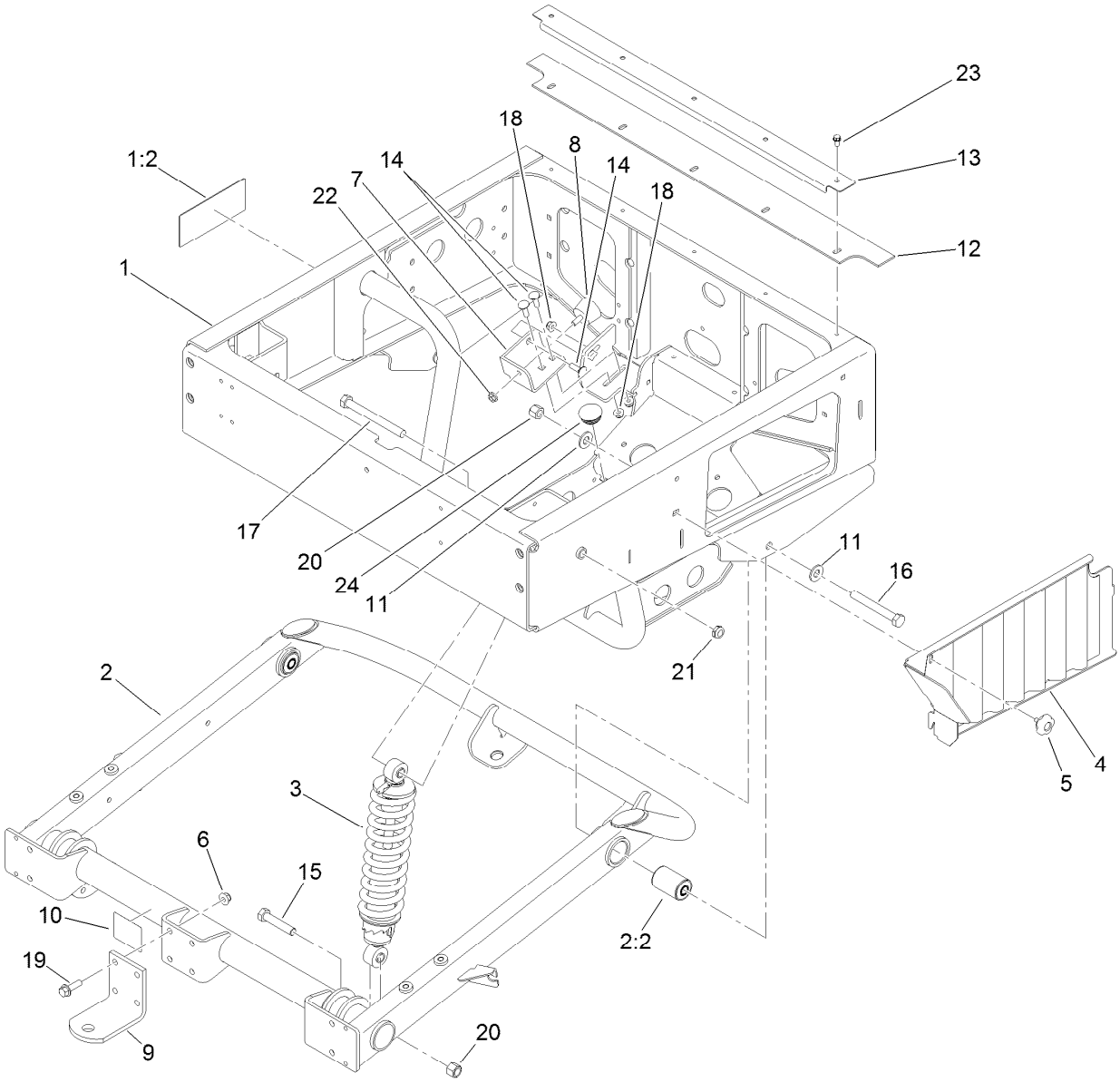


# Rear Frame and Suspension Assembly

| Ref. | Part Number | Qty. | Description |
|---|---|---|---|
| 1 | 120-5052 | 1 | Rear Frame ASM |
| 1:2 | 99-7345 | 1 | Decal-Warning |
| 2 | 115-7614 | 1 | Swing Arm ASM |
| 2:2 | 112-3377 | 2 | Bushing-Arm, Control |
| 3 | 133-0553 | 2 | Shock And Spring ASM |
| 4 | 119-9597-03 | 1 | Screen-Radiator |
| 5 | 105-1406 | 1 | Knob |
| 6 | 104-8301 | 4 | Nut-HF, NI |
| 7 | 119-9743-03 | 1 | Mount-Bumper |
| 8 | 68-3270 | 1 | Bumper-Rubber |
| 9 | 99-7654-03 | 1 | Hitch-Duty, Light |
| 10 | 136-1164 | 1 | Decal-Load, Towing |
| 11 | 87-7270 | 4 | Washer-Thrust |

| Ref. | Part Number | Qty. | Description |
|---|---|---|---|
| 12 | 119-9728 | 1 | Seal-Frame, Rear |
| 13 | 119-9729-03 | 1 | Reinforcement-Seal |
| 14 | 3230-2 | 3 | Bolt-CARR |
| 15 | 325-10 | 2 | Screw-HH |
| 16 | 325-17 | 2 | Screw-HH |
| 17 | 325-19 | 2 | Screw-HH |
| 18 | 104-8300 | 3 | Nut-HF, NI |
| 19 | 3234-24 | 4 | Screw-HHF |
| 20 | 3296-23 | 4 | Nut-Lock, NI |
| 21 | 3296-45 | 2 | Nut-Hex |
| 22 | 32128-20 | 1 | Nut-HF |
| 23 | 32144-4 | 5 | Screw-HWH |
| 24 | 117-0946 | 1 | Plug-Plastic |

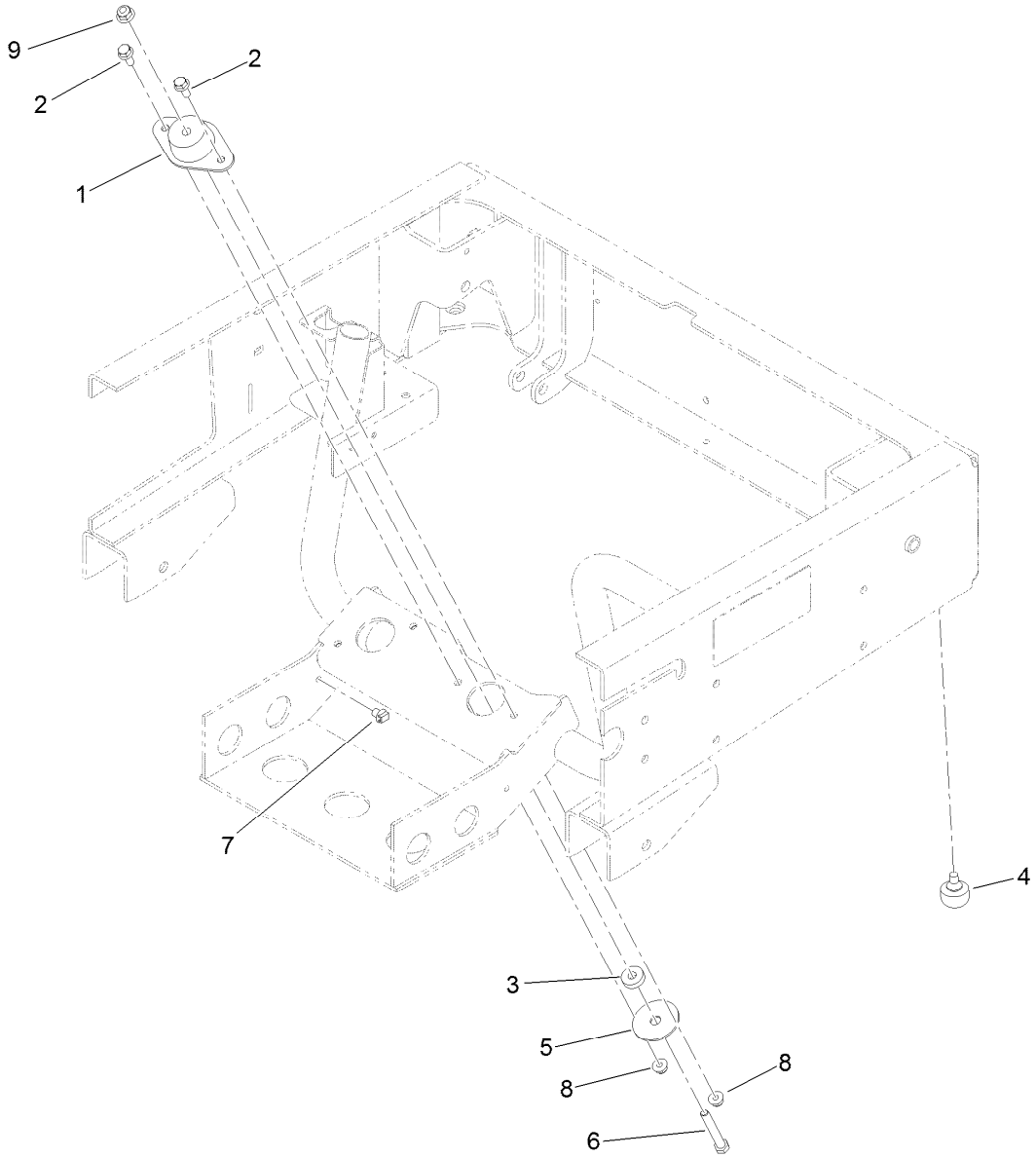


# Diesel Engine Mount Assembly

| *Ref.* | *Part Number* | *Qty.* | *Description* |
|---|---|---|---|
| 1 | 119-9745 | 4 | Mount-Engine |
| 2 | 3234-47 | 8 | Screw-HHF |
| 3 | 62-6660 | 4 | Spacer |
| 4 | 87-2440 | 2 | Bumper-Rubber |
| 5 | 87-5100 | 4 | Washer-Snubbing |
| 6 | 323-12 | 4 | Screw-HH |
| 7 | 32180-030 | 1 | Clip-Tie |
| 8 | 104-8300 | 8 | Nut-HF, NI |
| 9 | 104-8301 | 4 | Nut-HF, NI |

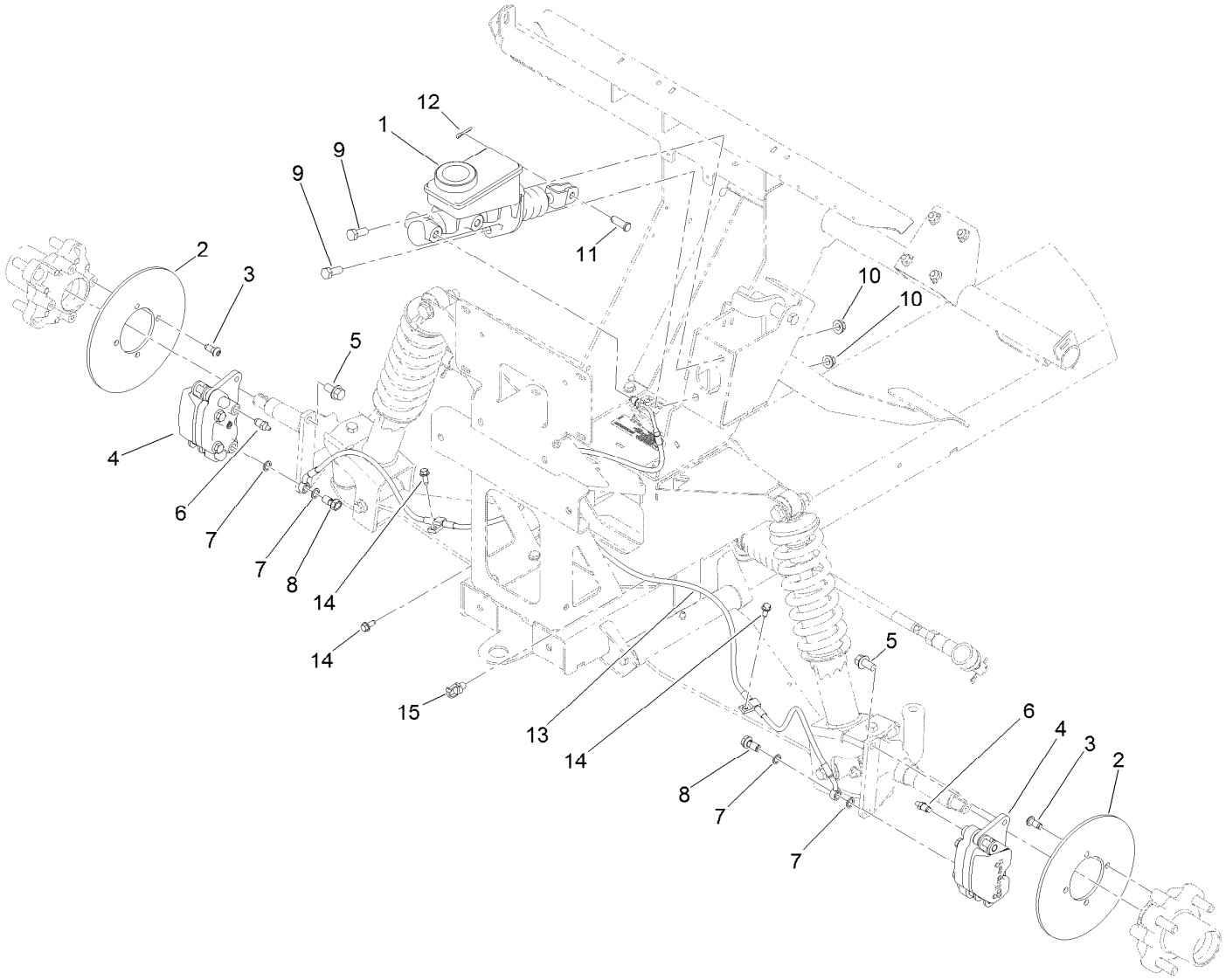


# Front Brake Assembly

| Ref. | Part Number | Qty. | Description |
|---|---|---|---|
| 1 | 104-6782 | 1 | Master Cylinder ASM |
| 2 | 131-3460 | 2 | Rotor |
| 3 | 121-9671 | 8 | Screw-HSBH |
| 4 | 127-7424 | 2 | Brake Caliper ASM |
| 5 | 3234-1 | 4 | Screw-HHF |
| 6 | 119-9509 | 2 | Screw-Bleed |
| 7 | 115-2341 | 4 | Washer-Banjo |
| 8 | 120-4875 | 2 | Bolt-Flange, Banjo |
| 9 | 323-6 | 2 | Screw-HH |
| 10 | 3290-357 | 2 | Nut-HHF, Whiz |
| 11 | 283-2 | 1 | Pin-Clevis |
| 12 | 3272-10 | 1 | Pin-Cotter |
| 13 | 132-6793 | 1 | Line-Brake, Front |
| 14 | 32144-10 | 3 | Screw-HWH |
| 15 | 32180-030 | 1 | Clip-Tie |

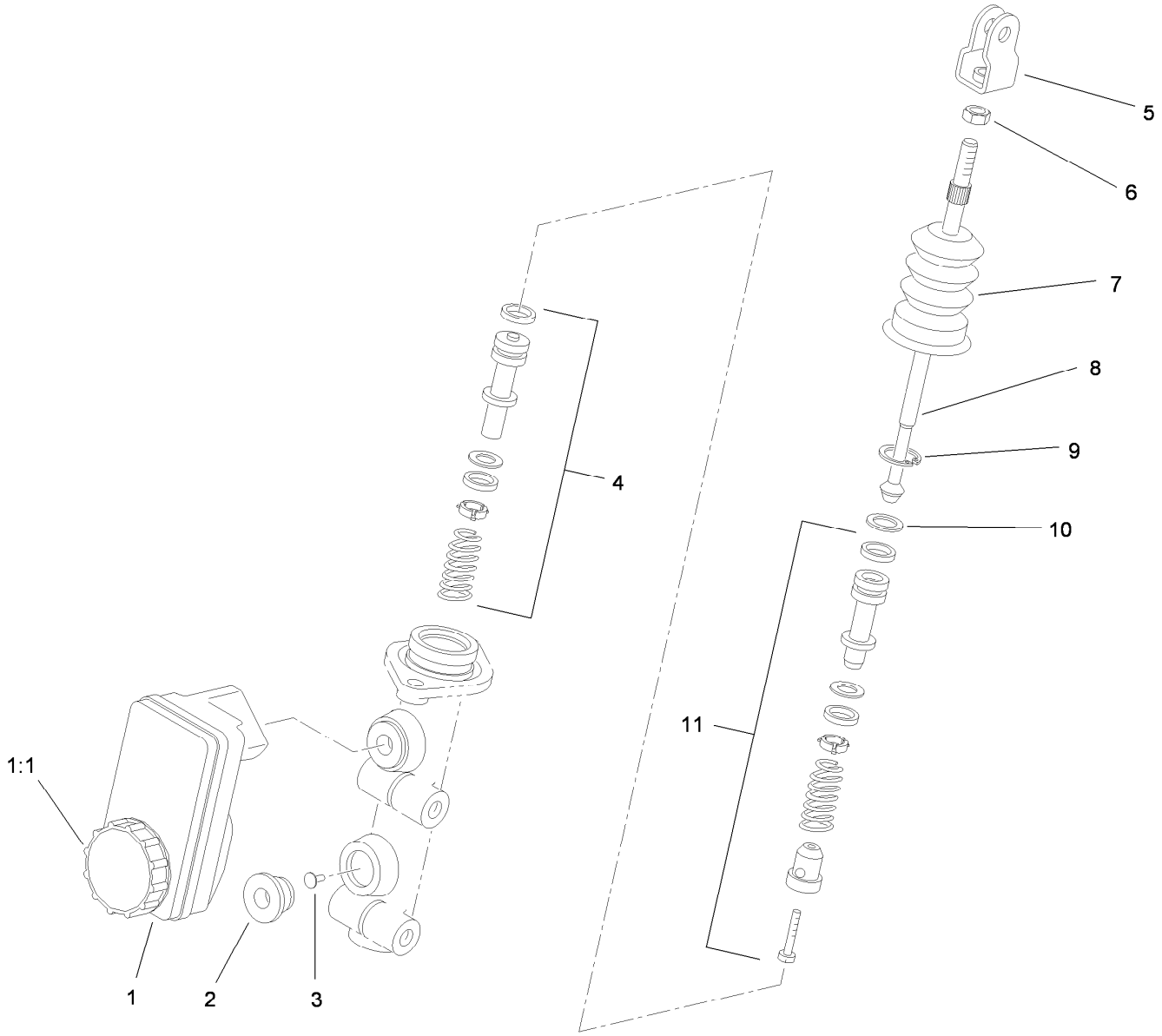


# Master Cylinder Assembly No. 104-6782

| *Ref.* | *Part Number* | *Qty.* | *Description* |
|---|---|---|---|
| 1 | 104-6845 | 1 | Reservoir ASM |
| 1:1 | 92-4112 | 1 | Cap ASM |
| 2 | 93-8971 | 2 | Seal-Port, Flange |
| 3 | 92-4103 | 1 | Pin-Stop |
| 4 | 92-4102 | 1 | Secondary Piston ASM |
| 5 | 92-4110 | 1 | Clevis |
| 6 | 21-0360 | 1 | Nut-Hex |
| 7 | 94-5209 | 1 | Cover-Dust |
| 8 | 94-5210 | 1 | Rod-Push |
| 9 | 92-4109 | 1 | Ring-Snap |
| 10 | 92-4108 | 1 | Retainer-Washer |
| 11 | 92-4101 | 1 | Primary Piston ASM |

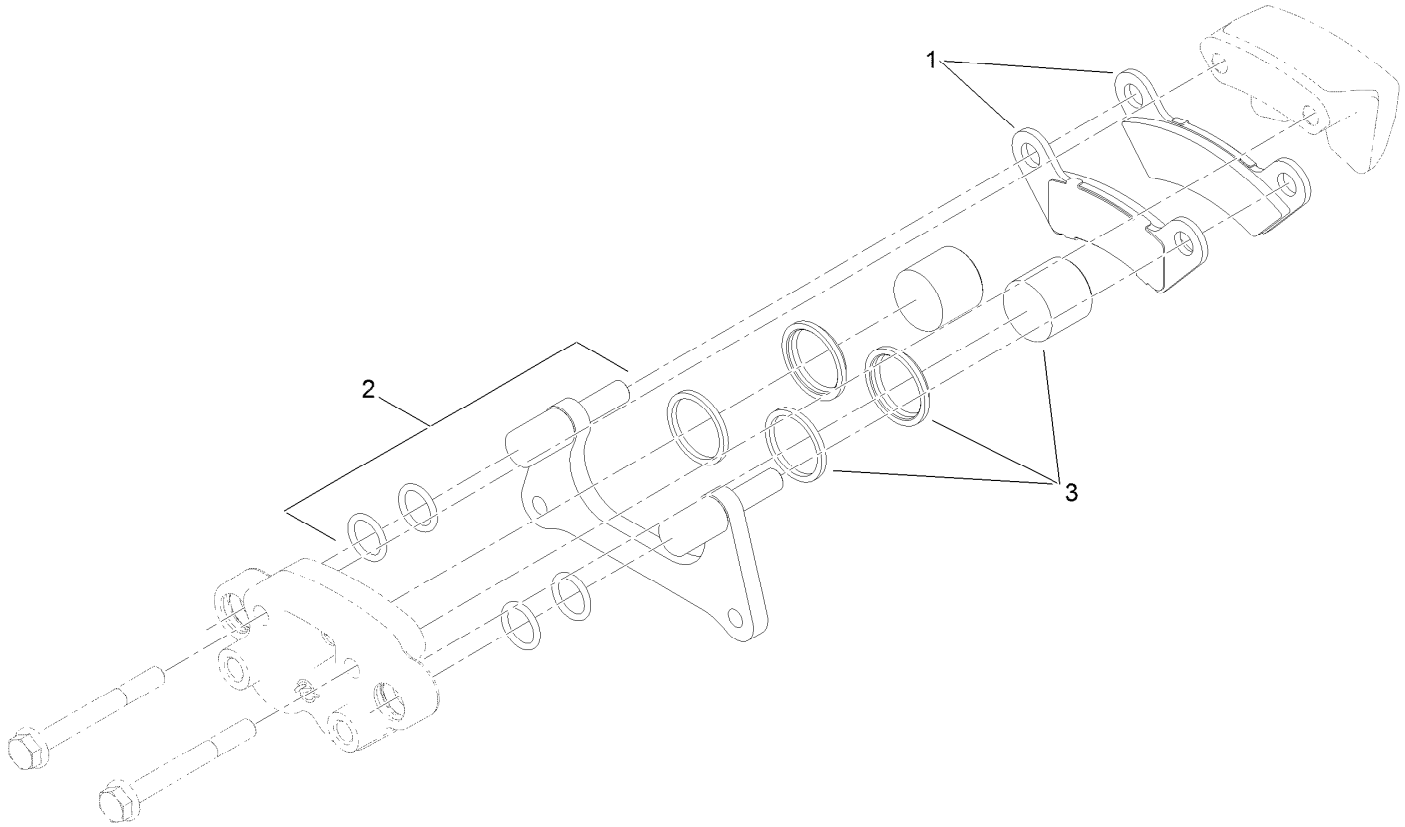


# Brake Caliper Assembly No. 127-7424

| *Ref.* | *Part Number* | *Qty.* | *Description* |
|---|---|---|---|
| 1 | 119-9510 | 1 | Pads-Brake |
| 2 | 119-9511 | 1 | Bracket Kit |
| 3 | 133-0614 | 1 | Piston Kit |

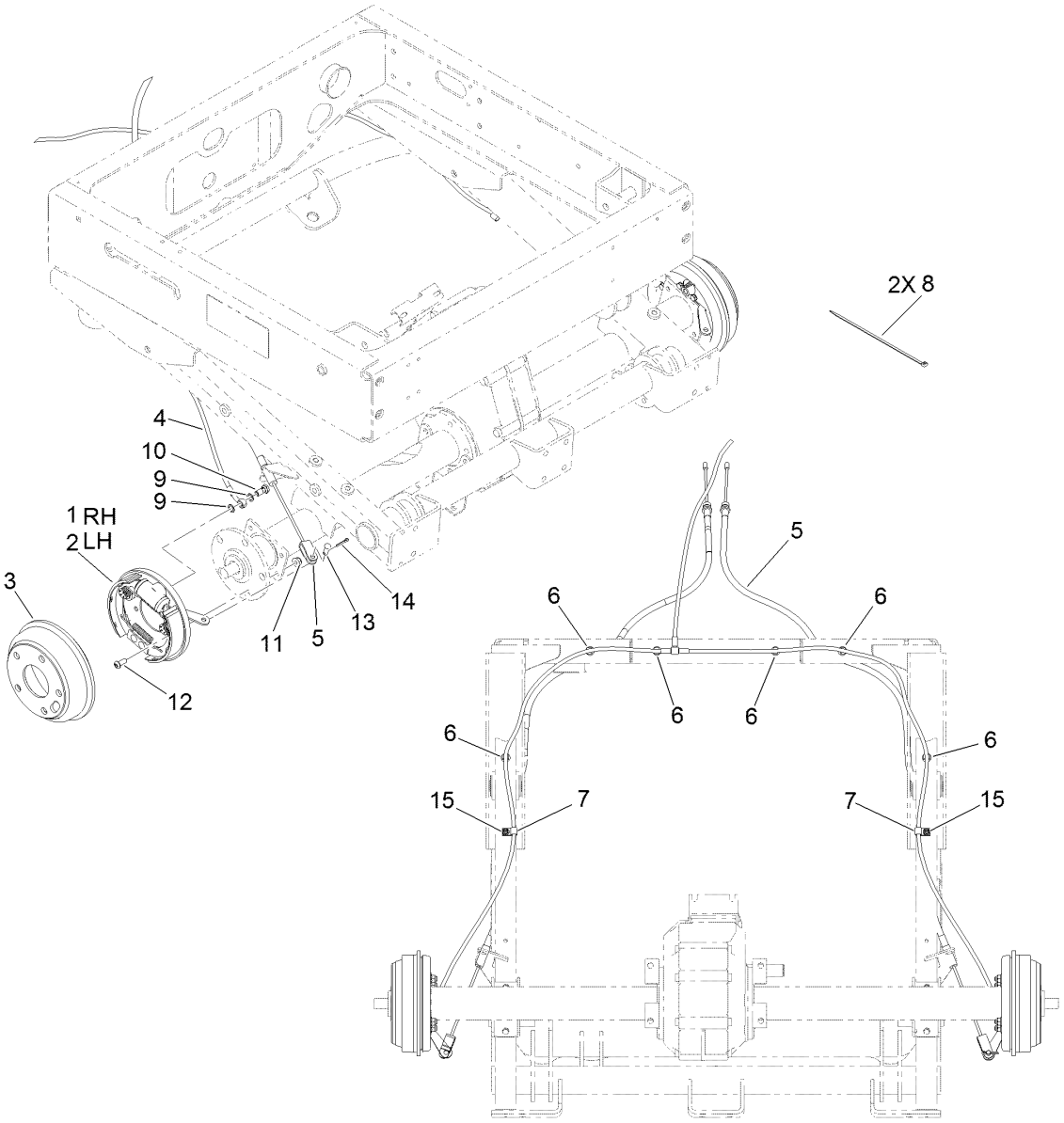


# Rear Brake Assembly

| Ref. | Part Number | Qty. | Description |
|---|---|---|---|
| 1 | 114-8331 | 1 | RH Brake ASM |
| 2 | 114-8332 | 1 | LH Brake ASM |
| 3 | 104-6500 | 2 | Drum-Brake |
| 4 | 112-2926 | 1 | Rear Brake Line ASM |
| 5 | 127-8684 | 2 | Cable-Brake, Adjustable |
| 6 | 32180-030 | 6 | Clip-Tie |
| 7 | 2412-89 | 2 | Clamp-R |
| 8 | 3290-378 | 2 | Tie-Cable |
| 9 | 115-2341 | 4 | Washer-Banjo |
| 10 | 115-2340 | 2 | Bolt-Banjo |
| 11 | 104-8300 | 8 | Nut-HF, NI |
| 12 | 3274-55 | 8 | Screw-HSBH |
| 13 | 283-62 | 2 | Pin-Clevis |
| 14 | 3272-10 | 2 | Pin-Cotter |
| 15 | 32104-17 | 2 | Screw-HWH |

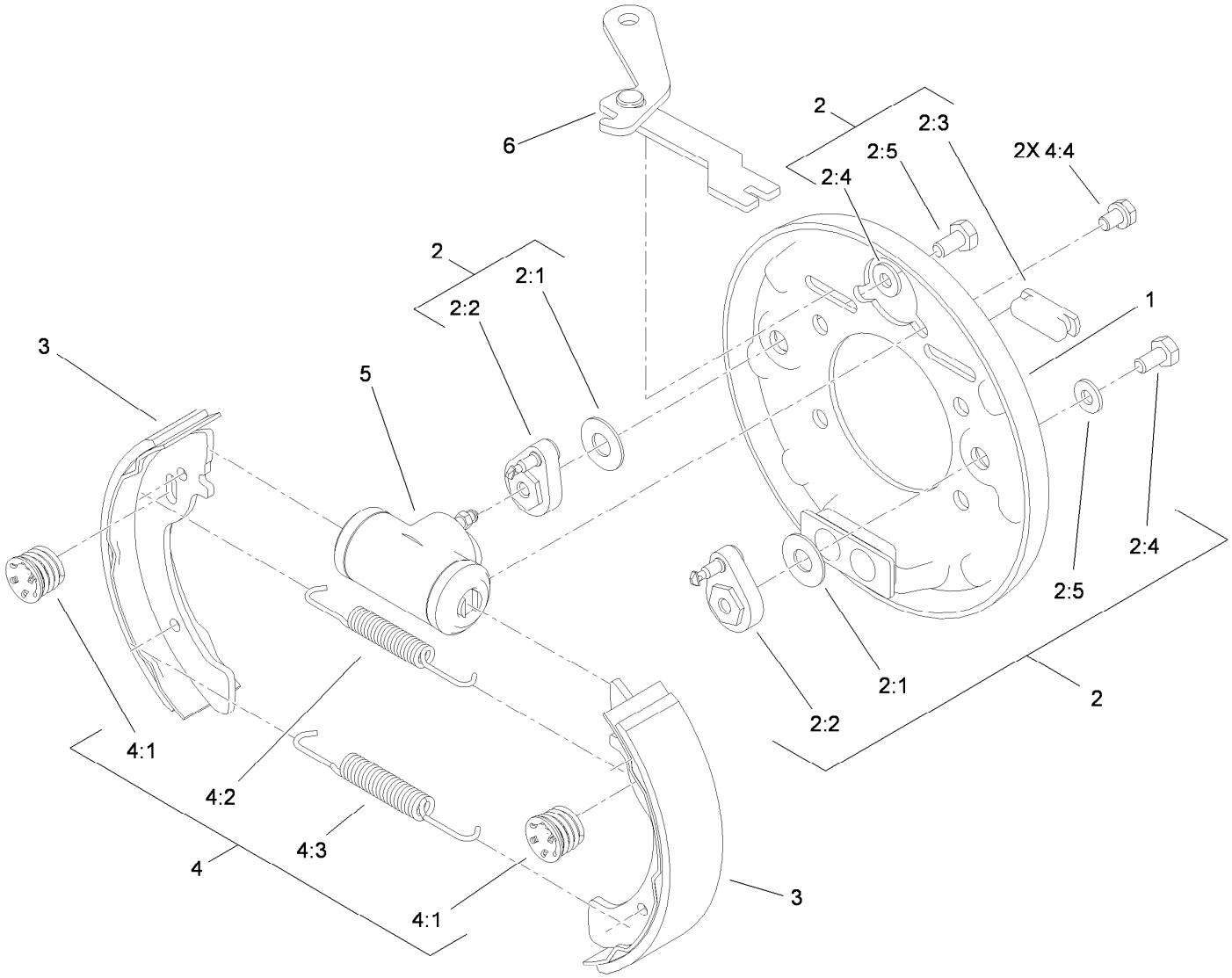


# RH Rear Brake Assembly No. 114-8331

| *Ref.* | *Part Number* | *Qty.* | *Description* |
|---|---|---|---|
| 1 | 100-8586 | 1 | Backing Plate ASM |
| 2 | 104-6820 | 1 | Adjuster Kit |
| 2:1 | 100-8585 | 2 | Washer-Bellville |
| 2:2 | 100-8588 | 2 | Adjuster Lever ASM |
| 2:3 | 100-8584 | 2 | Cover-Dust |
| 2:4 | | 2 | Washer ● |
| 2:5 | | 2 | Bolt ● |
| 3 | 104-6818 | 4 | Shoe And Lining Kit |
| 4 | 104-6819 | 1 | Hardware Kit |
| 4:1 | 100-8583 | 2 | Shoe Hold Down Spring ASM |
| 4:2 | 100-8581 | 2 | Spring-Upper |
| 4:3 | 100-8582 | 2 | Spring-Lower |
| 4:4 | | 2 | Bolt And Washer ● |
| 5 | 114-8333 | 1 | Wheel Cylinder ASM |
| 6 | 104-6826 | 1 | RH Park Brake Lever ASM |

● Not serviced separately

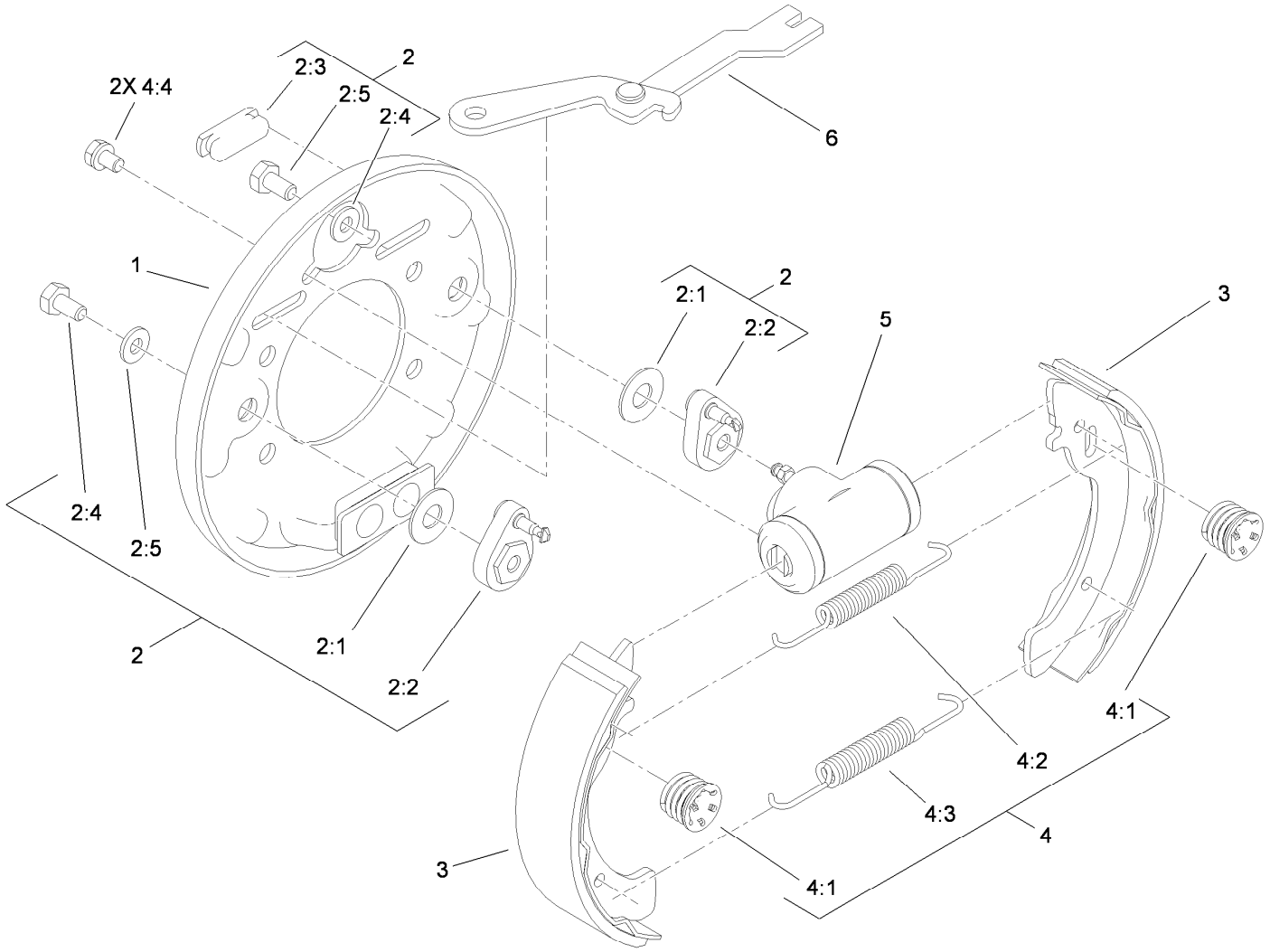


# LH Rear Brake Assembly No. 114-8332

| Ref. | Part Number | Qty. | Description |
|---|---|---|---|
| 1 | 100-8586 | 1 | Backing Plate ASM |
| 2 | 104-6820 | 1 | Adjuster Kit |
| 2:1 | 100-8585 | 2 | Washer-Bellville |
| 2:2 | 100-8588 | 2 | Adjuster Lever ASM |
| 2:3 | 100-8584 | 2 | Cover-Dust |
| 2:4 | | 2 | Washer ● |
| 2:5 | | 2 | Bolt ● |
| 3 | 104-6818 | 4 | Shoe And Lining Kit |
| 4 | 104-6819 | 1 | Hardware Kit |
| 4:1 | 100-8583 | 2 | Shoe Hold Down Spring ASM |
| 4:2 | 100-8581 | 2 | Spring-Upper |
| 4:3 | 100-8582 | 2 | Spring-Lower |
| 4:4 | | 2 | Bolt And Washer ● |
| 5 | 114-8333 | 1 | Wheel Cylinder ASM |
| 6 | 104-6825 | 1 | LH Park Brake Lever ASM |

● Not serviced separately

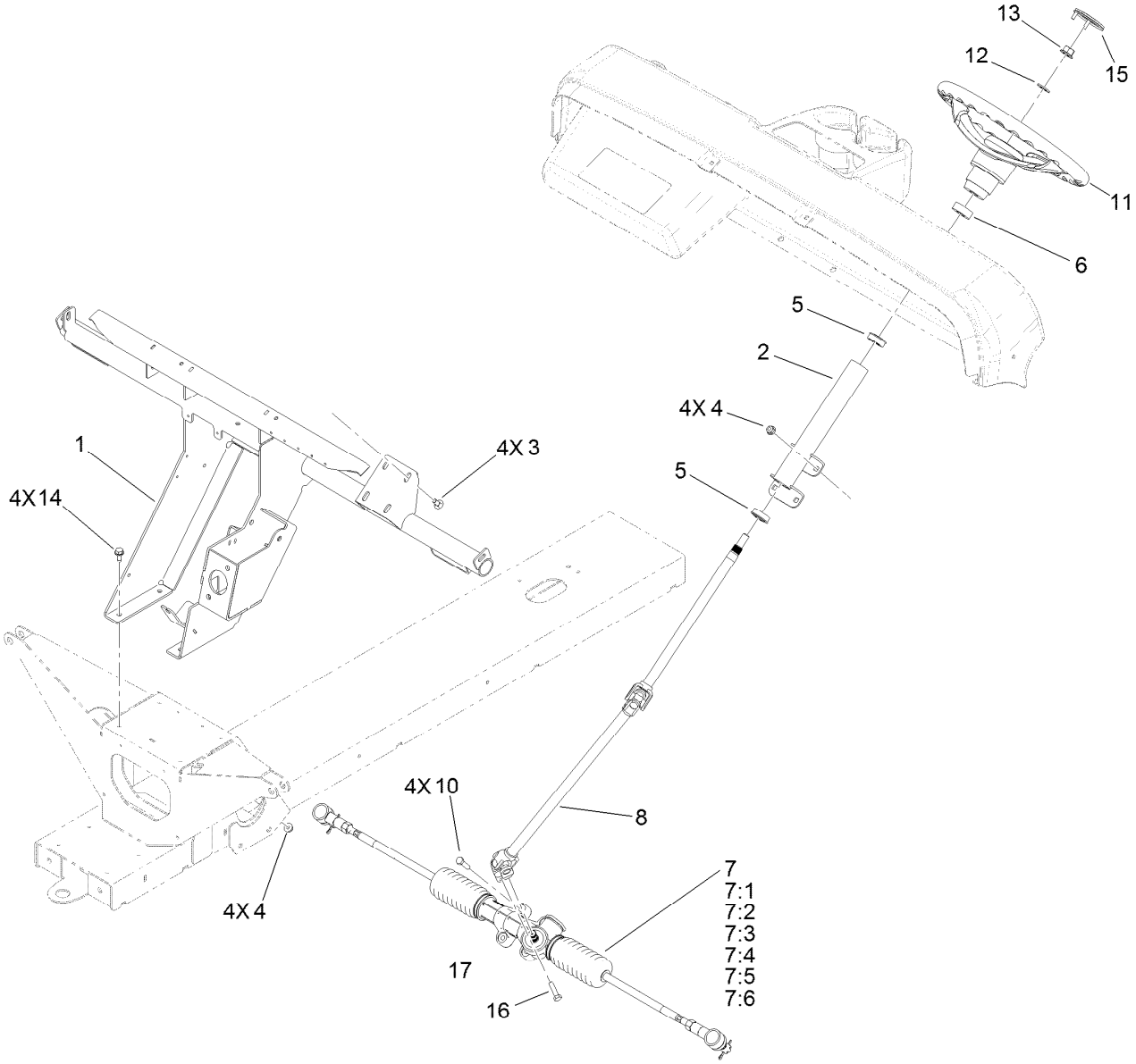


# Steering Assembly

| Ref. | Part Number | Qty. | Description |
|---|---|---|---|
| 1 | 132-6740-03 | 1 | Support-Dash |
| 2 | 132-6760-03 | 1 | Column-Steering |
| 3 | 3230-1 | 4 | Bolt-CARR |
| 4 | 104-8300 | 8 | Nut-HF, NI |
| 5 | 112-3262 | 2 | Bearing |
| 6 | 21-9260 | 1 | Cover-Dust |
| 7 | 133-0576 | 1 | Steering Rack ASM |
| 7:1 | 133-0607 | 1 | Seal-Shaft |
| 7:2 | 133-0606 | 2 | Bellows |
| 7:3 | 133-0605 | 2 | Clamp-Bellows, Inner |
| 7:4 | 133-0604 | 2 | Clamp-Bellows, Outer |

| Ref. | Part Number | Qty. | Description |
|---|---|---|---|
| 7:5 | 133-0603 | 2 | Track Tie Rod |
| 7:6 | 133-0602 | 2 | End-Rod, Track |
| 8 | 132-6763 | 1 | Shaft-Steering |
| 10 | 322-6 | 4 | Screw-HH |
| 11 | 131-0957 | 1 | Wheel-Steering |
| 12 | 3256-26 | 1 | Washer-Flat |
| 13 | 99-5107 | 1 | Nut-Lock |
| 14 | 32144-70 | 4 | Screw-HWHTF |
| 15 | 131-3630 | 1 | Cap-Wheel, Steering |
| 16 | 116-3515 | 1 | Screw-HH, Special |
| 17 | 3253-4 | 1 | Washer-Lock |

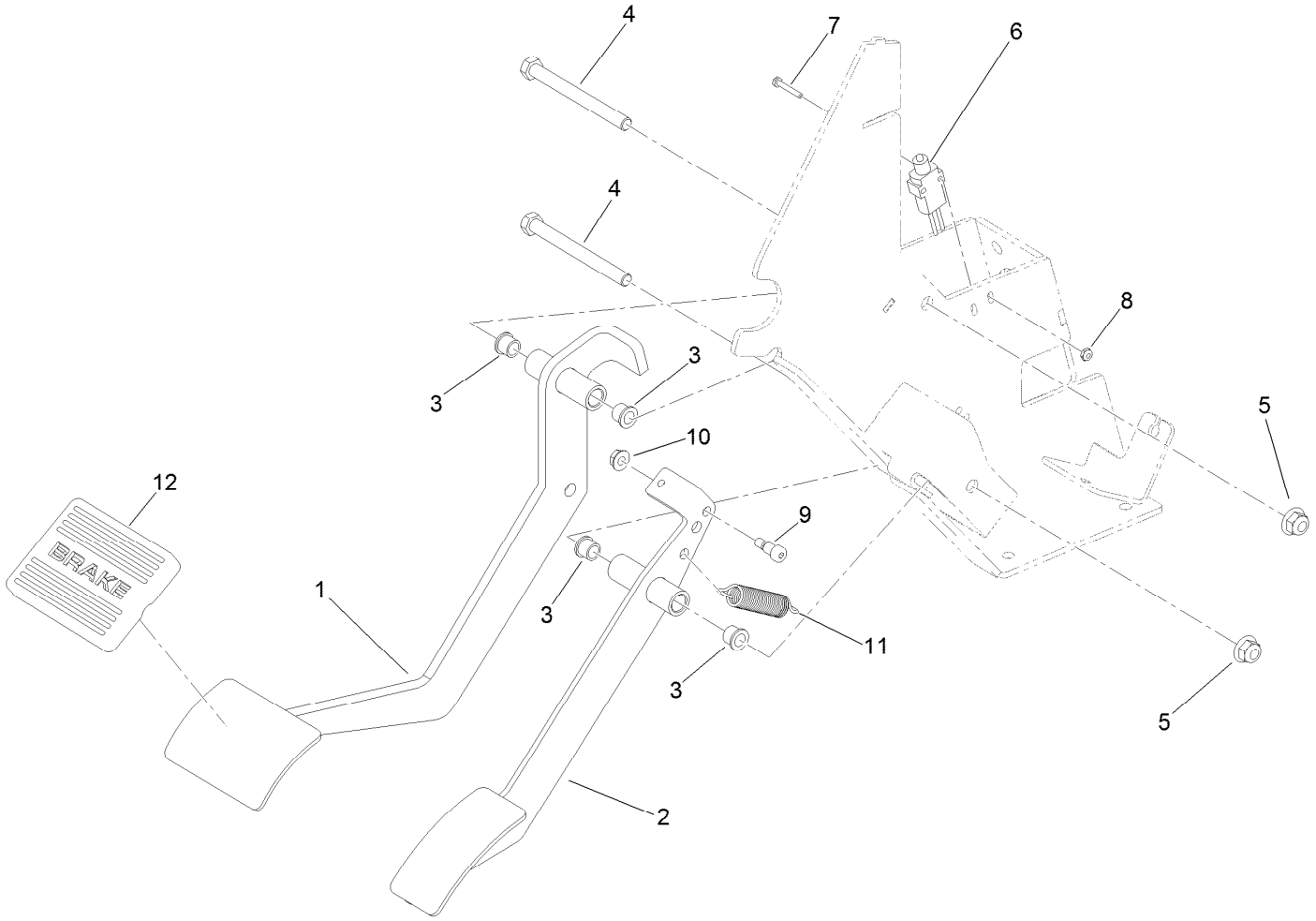


# Pedal Assembly

| Ref. | Part Number | Qty. | Description |
|---|---|---|---|
| 1 | 132-6753-03 | 1 | Pedal-Brake |
| 2 | 132-6751-03 | 1 | Pedal-Throttle |
| 3 | 256-116 | 4 | Bushing-Flange |
| 4 | 323-16 | 2 | Screw-HH |
| 5 | 104-8301 | 2 | Nut-HF, NI |
| 6 | 95-8900 | 1 | Switch |
| 7 | 32105-9 | 2 | Screw |
| 8 | 3296-9 | 2 | Nut-Hex |
| 9 | 119-4881 | 1 | Bolt-Shoulder |
| 10 | 32128-33 | 1 | Nut-HF |
| 11 | 104-6415 | 1 | Spring-Return, Pedal |
| 12 | 7-3900 | 1 | Pad-Brake |

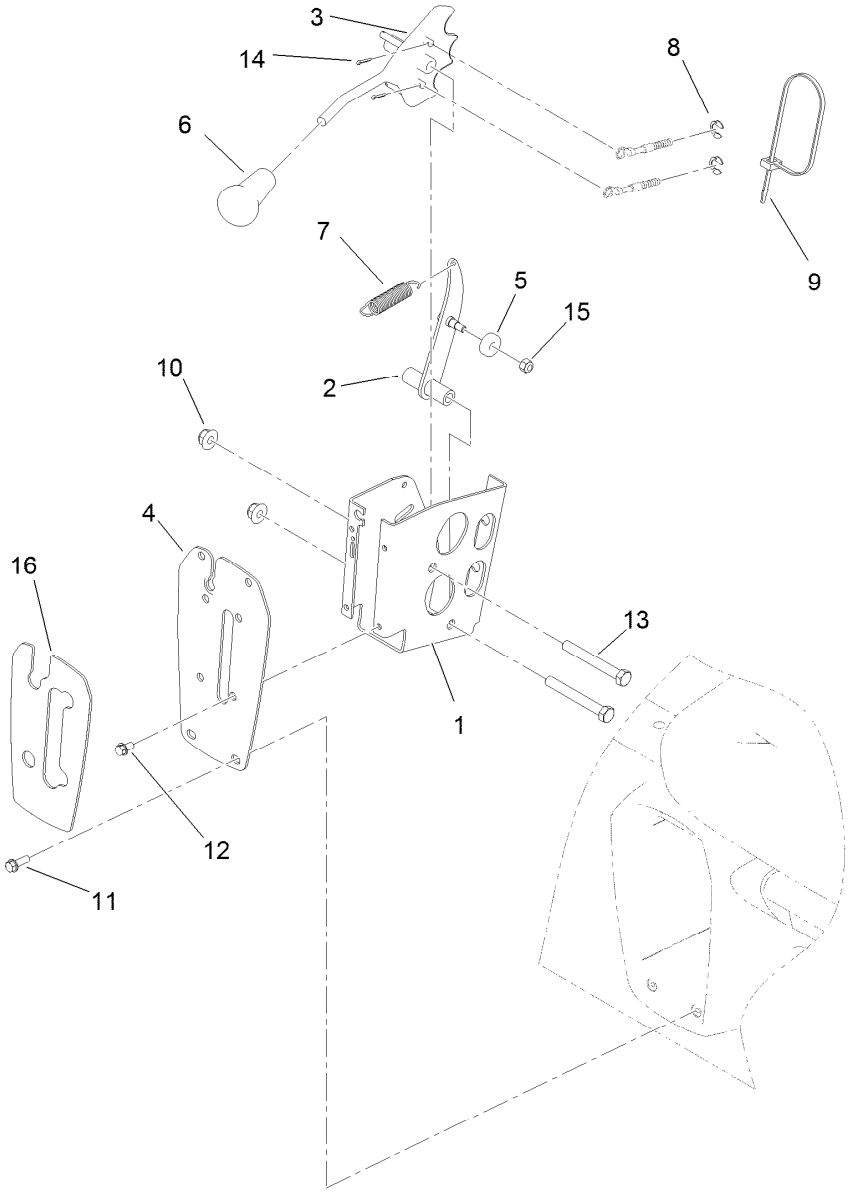


# Shifter Assembly

| Ref. | Part Number | Qty. | Description |
|---|---|---|---|
| 1 | 108-3141-03 | 1 | Bracket-Shift |
| 2 | 108-3138 | 1 | Arm-Detent |
| 3 | 114-2719 | 1 | Plate-Detent |
| 4 | 99-7887-03 | 1 | Plate-Shifter |
| 5 | 251-307 | 1 | Bearing-Ball |
| 6 | 99-7981 | 1 | Knob-Grip, Soft |
| 7 | 104-6415 | 1 | Spring-Return, Pedal |
| 8 | 32151-101 | 2 | E-Ring |

| Ref. | Part Number | Qty. | Description |
|---|---|---|---|
| 9 | 3290-378 | 1 | Tie-Cable |
| 10 | 104-8301 | 2 | Nut-HF, NI |
| 11 | 32105-15 | 4 | Screw-HWH |
| 12 | 32144-4 | 4 | Screw-HWH |
| 13 | 323-14 | 2 | Screw-HH |
| 14 | 3272-5 | 2 | Pin-Cotter |
| 15 | 3296-42 | 1 | Nut-Lock, NI |
| 16 | 99-7952 | 1 | Decal-Shifter |

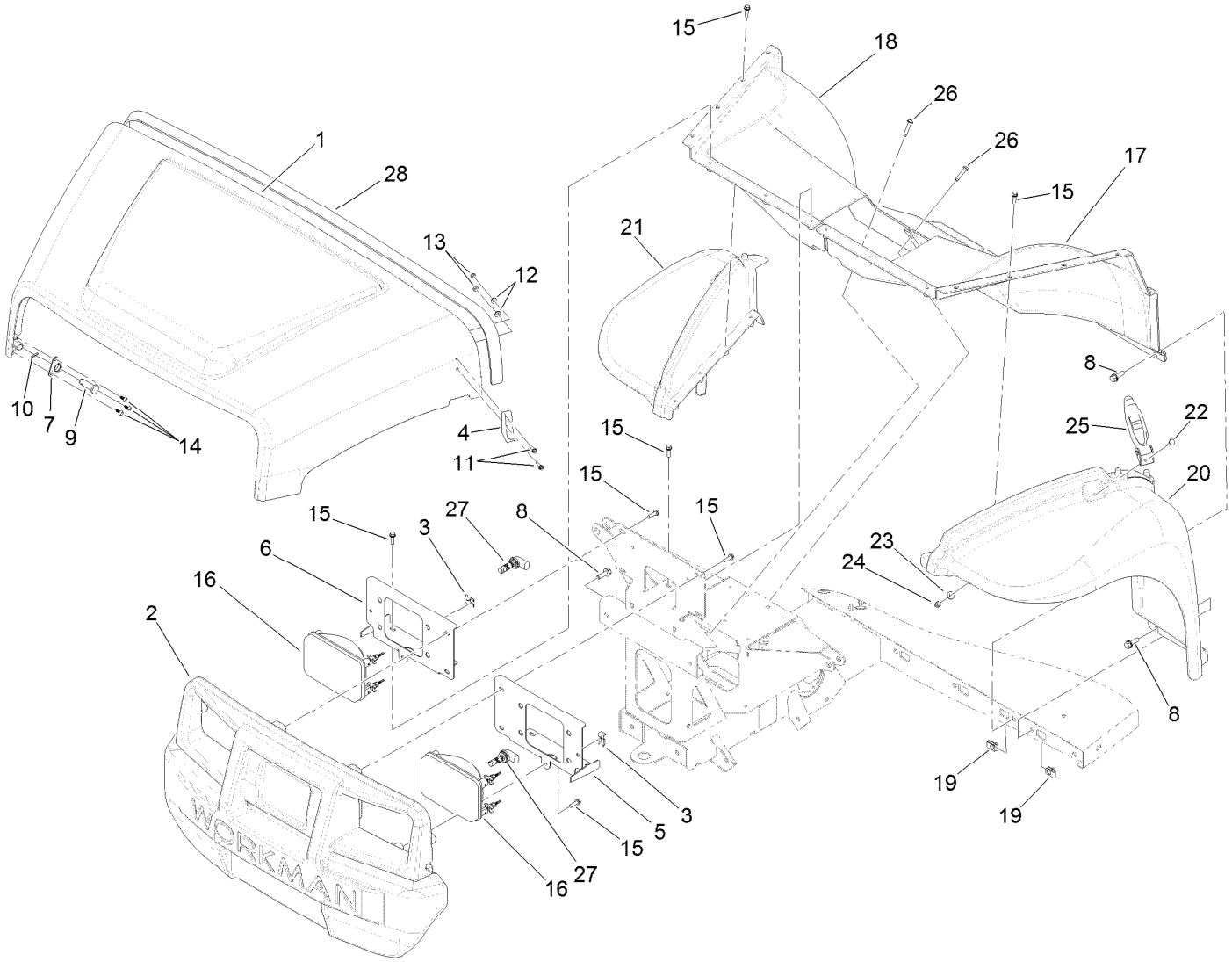


# Hood and Fender Assembly

| Ref. | Part Number | Qty. | Description |
|---|---|---|---|
| 1 | 136-6281 | 1 | Hood |
| 2 | 132-8530 | 1 | Bumper |
| 3 | 115-2408 | 6 | Clip-Speed |
| 4 | 103-2897 | 2 | Latch-Catch |
| 5 | 132-6788-03 | 1 | Bracket-Headlight, LH |
| 6 | 132-6789-03 | 1 | Bracket-Headlight, RH |
| 7 | 112-3308 | 2 | Retainer-Pin |
| 8 | 3234-29 | 12 | Screw-HHF |
| 9 | 117-5094 | 2 | Pin-Clevis |
| 10 | 32121-50 | 2 | Pin-Spring |
| 11 | 32105-13 | 4 | Screw-HWH |
| 12 | 3256-14 | 4 | Washer-Flat |
| 13 | 3296-2 | 4 | Nut-Lock, NI |
| 14 | 121-9605 | 6 | Screw-HWH |

| Ref. | Part Number | Qty. | Description |
|---|---|---|---|
| 15 | 46-8091 | 24 | Screw-HWH |
| 16 | 132-6703 | 2 | Headlight ASM |
| 17 | 132-6775 | 1 | Fender-Inner, LH |
| 18 | 132-6776 | 1 | Fender-Inner, RH |
| 19 | 112-3306 | 10 | Nut |
| 20 | 112-3371 | 1 | Fender-LH |
| 21 | 112-3370 | 1 | Fender-RH |
| 22 | 321-39 | 2 | Screw-HH |
| 23 | 3256-22 | 2 | Washer-Flat |
| 24 | 3296-42 | 2 | Nut-Lock, NI |
| 25 | 115-2416 | 2 | Latch-Rubber |
| 26 | 132-6777 | 4 | Screw-TTH |
| 27 | 133-0574 | 2 | Bulb-LED |
| 28 | 115-7635 | 1 | Seal-Foam |

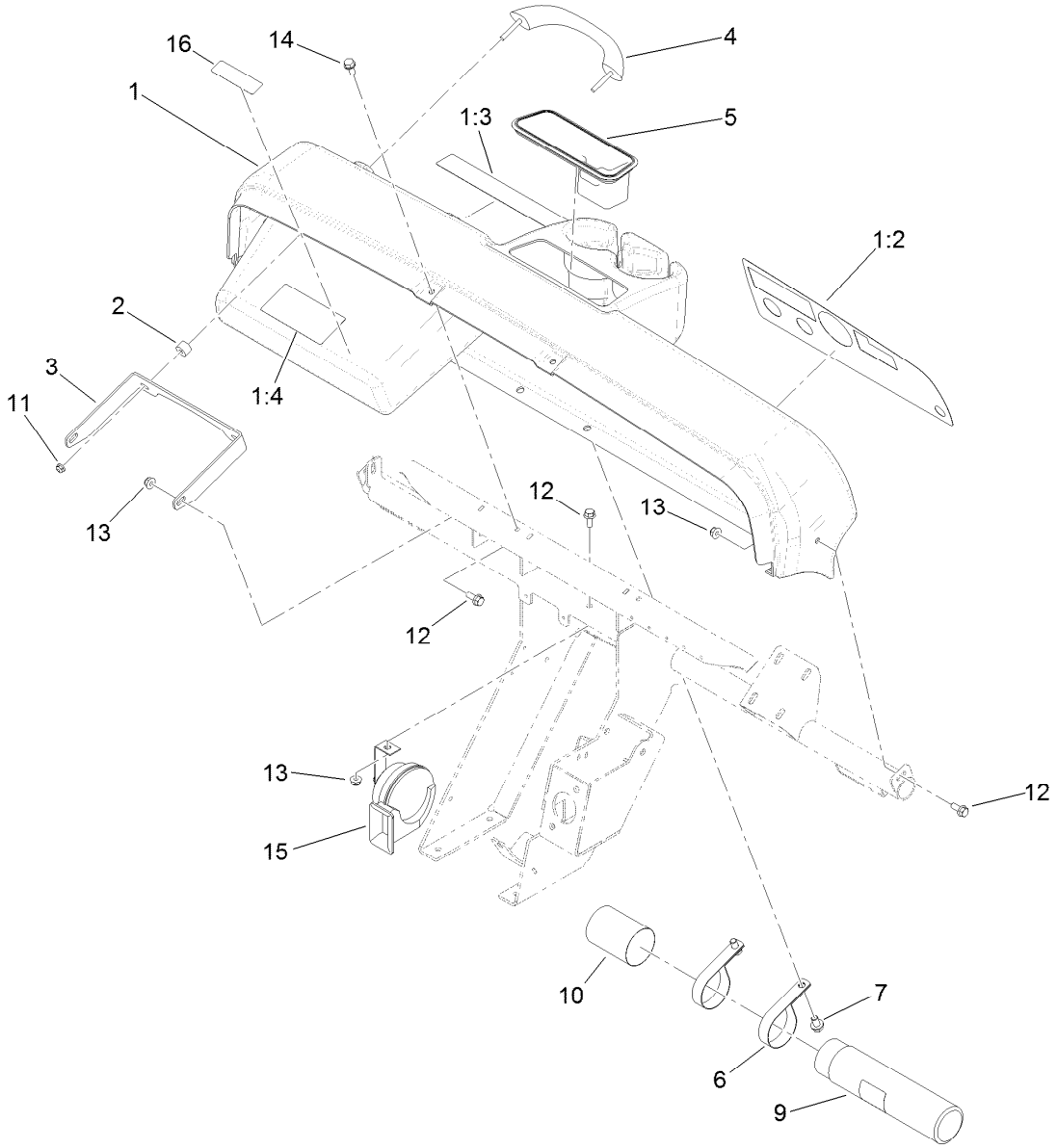


# Dash Assembly

| Ref. | Part Number | Qty. | Description |
|---|---|---|---|
| 1 | 119-9726 | 1 | Dash ASM |
| 1:2 | 119-9727 | 1 | Decal-Panel, Control |
| 1:3 | 121-9775 | 1 | Decal-Danger |
| 1:4 | 115-2412 | 1 | Decal-No Storage |
| 2 | 114-8301 | 2 | Spacer |
| 3 | 112-3391-03 | 1 | Bracket-Grip, Handle |
| 4 | 112-3320 | 1 | Handle-Grip |
| 5 | 104-6930 | 1 | Plug-Rubber |
| 6 | 2412-133 | 2 | Clamp-R |

| Ref. | Part Number | Qty. | Description |
|---|---|---|---|
| 7 | 32144-69 | 2 | Screw-HWHTF |
| 9 | 104-7050 | 1 | Tube-Manual |
| 10 | 104-7048 | 1 | Cap-Housing |
| 11 | 104-7201 | 2 | Nut-HF |
| 12 | 110-5053 | 4 | Screw-HHF |
| 13 | 104-8300 | 4 | Nut-HF, NI |
| 14 | 32144-11 | 6 | Screw-HWHTF |
| 15 | 110-2594 | 1 | Horn |
| 16 | 120-4837 | 1 | Decal-Fuse Block |

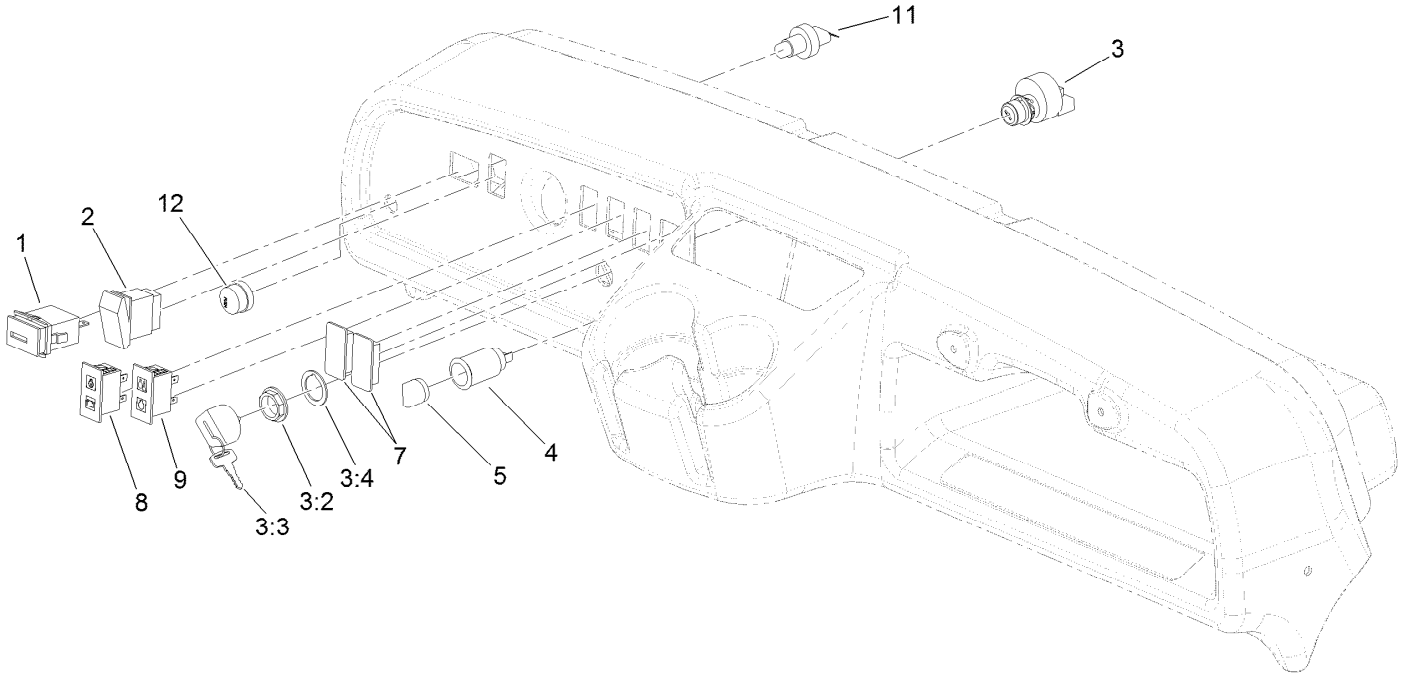


# Control Panel Assembly

| *Ref.* | *Part Number* | *Qty.* | *Description* |
|---|---|---|---|
| 1 | 94-4208 | 1 | Hourmeter |
| 2 | 95-8999 | 1 | Switch |
| 3 | 106-5269 | 1 | Ignition Switch ASM |
| 3:2 | 108-8660 | 1 | Nut-Mounting |
| 3:3 | 106-5270 | 1 | Ignition Key Set |
| 3:4 | 108-8659 | 1 | Washer-Backup |
| 4 | 99-7411 | 1 | Point-Power |
| 5 | 99-7416 | 1 | Cap |
| 7 | 99-7420 | 2 | Plug-Hole |
| 8 | 100-8070 | 1 | Lamp-Warning |
| 9 | 100-8071 | 1 | Lamp-Warning |
| 11 | 112-3324 | 1 | Switch-Horn |
| 12 | 112-3313 | 1 | Nut-Weatherproof |

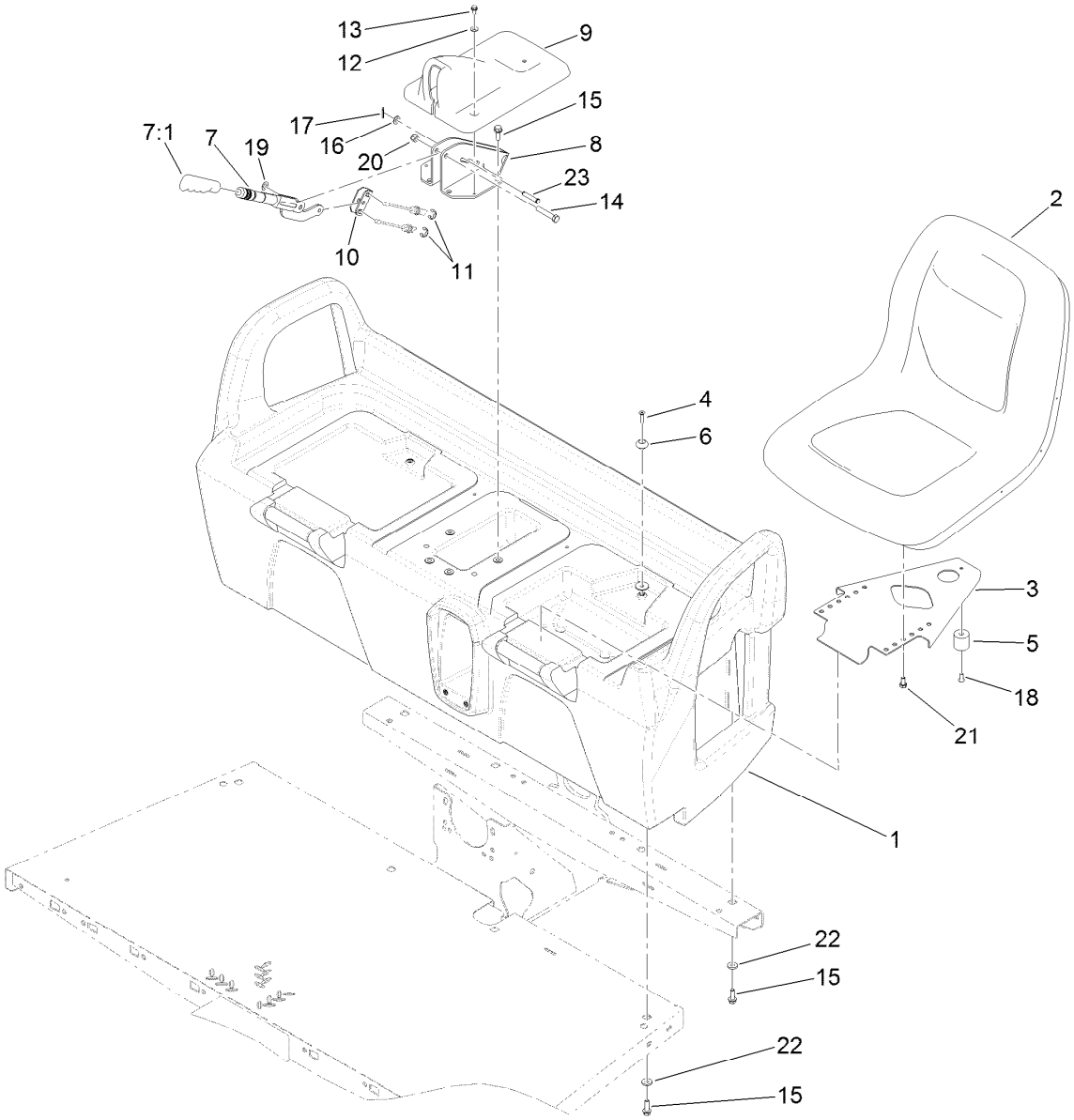


# Seatbase Assembly

| Ref. | Part Number | Qty. | Description |
|---|---|---|---|
| 1 | 104-6847 | 1 | Base-Seat |
| 2 | 133-0577 | 2 | Seat ASM |
| 3 | 99-7829 | 2 | Bracket-Seat |
| 4 | 32108-5 | 2 | Screw-FH |
| 5 | 99-7830 | 2 | Receptical-Rubber |
| 6 | 99-7833 | 2 | Post-Holding |
| 7 | 127-8863 | 1 | Lever-Brake, Park |
| 7:1 | 127-8864 | 1 | Grip-Handle |
| 8 | 104-6844-03 | 1 | Support-Brake, Park |
| 9 | 104-7014 | 1 | Cover-Brake, Parking |
| 10 | 87-3480 | 1 | Bracket-Equalizer, Cable |
| 11 | 32120-47 | 2 | Ring-Retaining, External |

| Ref. | Part Number | Qty. | Description |
|---|---|---|---|
| 12 | 3256-1 | 4 | Washer-Flat |
| 13 | 32144-4 | 2 | Screw-HWH |
| 14 | 323-10 | 1 | Screw-HH |
| 15 | 3234-17 | 12 | Screw-HHF |
| 16 | 3256-23 | 1 | Washer-Plain |
| 17 | 3272-6 | 1 | Pin-Cotter |
| 18 | 3290-412 | 2 | Rivet-Blind |
| 19 | 3290-477 | 1 | Washer-Curved |
| 20 | 3296-39 | 1 | Nut-Lock, NI |
| 21 | 33114-016 | 8 | Screw-HH |
| 22 | 88-7200 | 8 | Washer-Flat |
| 23 | 94-3829 | 1 | Pin-Clevis |

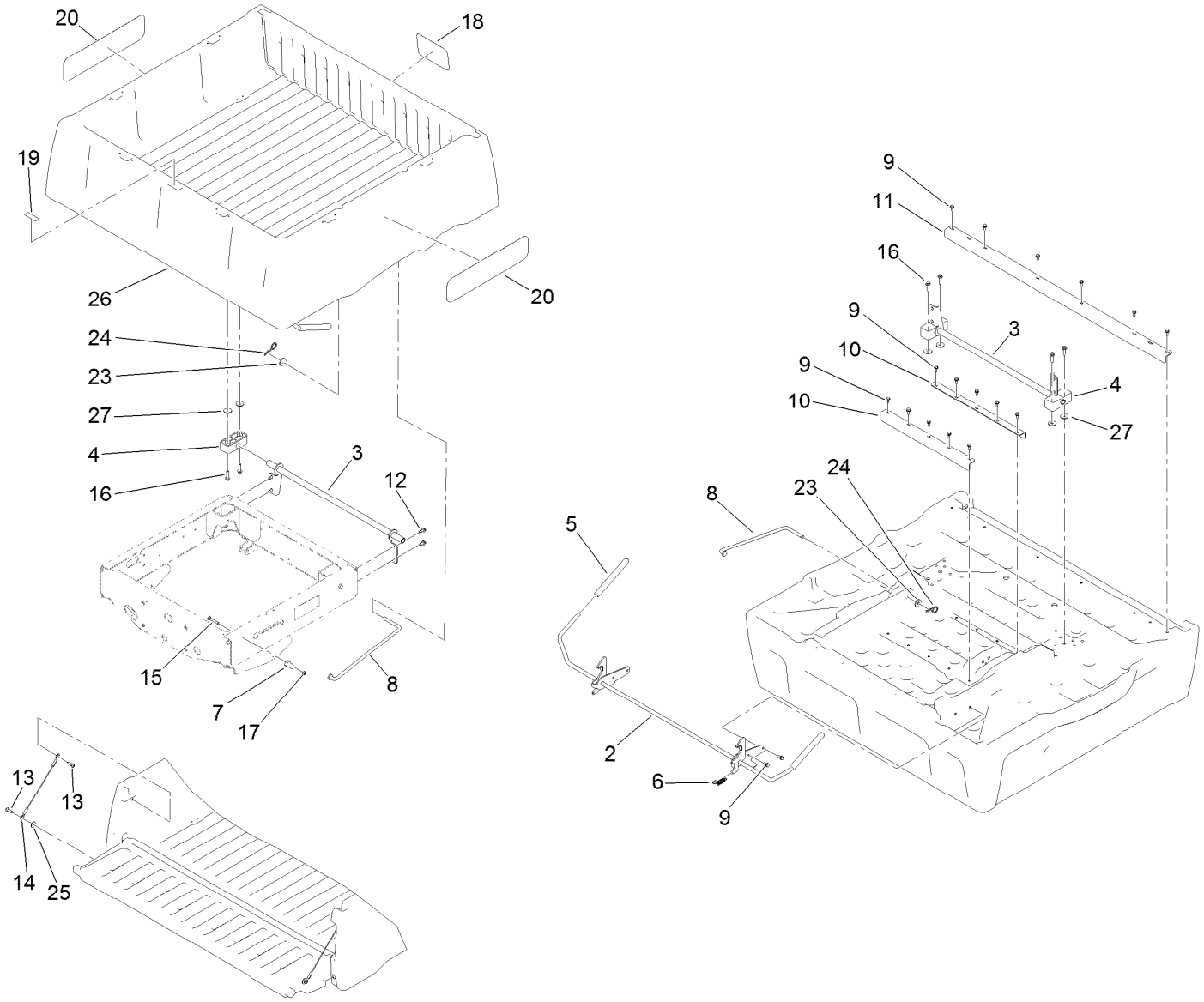


# Cargo Bed Assembly

| Ref. | Part Number | Qty. | Description |
|---|---|---|---|
| 2 | 121-6344 | 1 | Latch |
| 3 | 133-0625-03 | 1 | Bracket-Pivot |
| 4 | 121-6342 | 2 | Bushing-Pivot |
| 5 | 119-9627 | 2 | Grip-Handle |
| 6 | 5-7290 | 2 | Spring-Tension |
| 7 | 104-7248 | 2 | Pin-Latch |
| 8 | 121-6316 | 1 | Rod-Prop |
| 9 | 3234-5 | 20 | Screw-HHF |
| 10 | 121-6314-03 | 2 | Brace-Bed, Middle |
| 11 | 121-6315-03 | 1 | Brace-Bed, Rear |
| 12 | 105-6245 | 4 | Screw-Tapping |
| 13 | 119-2267 | 4 | Screw-Shoulder, BHTF |

| Ref. | Part Number | Qty. | Description |
|---|---|---|---|
| 14 | 121-6343 | 2 | Lanyard-Tailgate |
| 15 | 3230-7 | 2 | Bolt-CARR |
| 16 | 3234-18 | 4 | Screw-HHF |
| 17 | 3296-29 | 2 | Nut-Lock, NI |
| 18 | 104-7213 | 1 | Decal |
| 19 | 115-7739 | 1 | Decal-No Riders |
| 20 | 120-4826 | 2 | Decal |
| 23 | 110-6147 | 1 | Washer-Flat |
| 24 | 107-3155 | 1 | Hairpin |
| 25 | 115-7109 | 2 | Washer-Flat |
| 26 | 133-0560 | 1 | Cargo Bed/Tailgate ASM |
| 27 | 87-5330 | 4 | Washer |

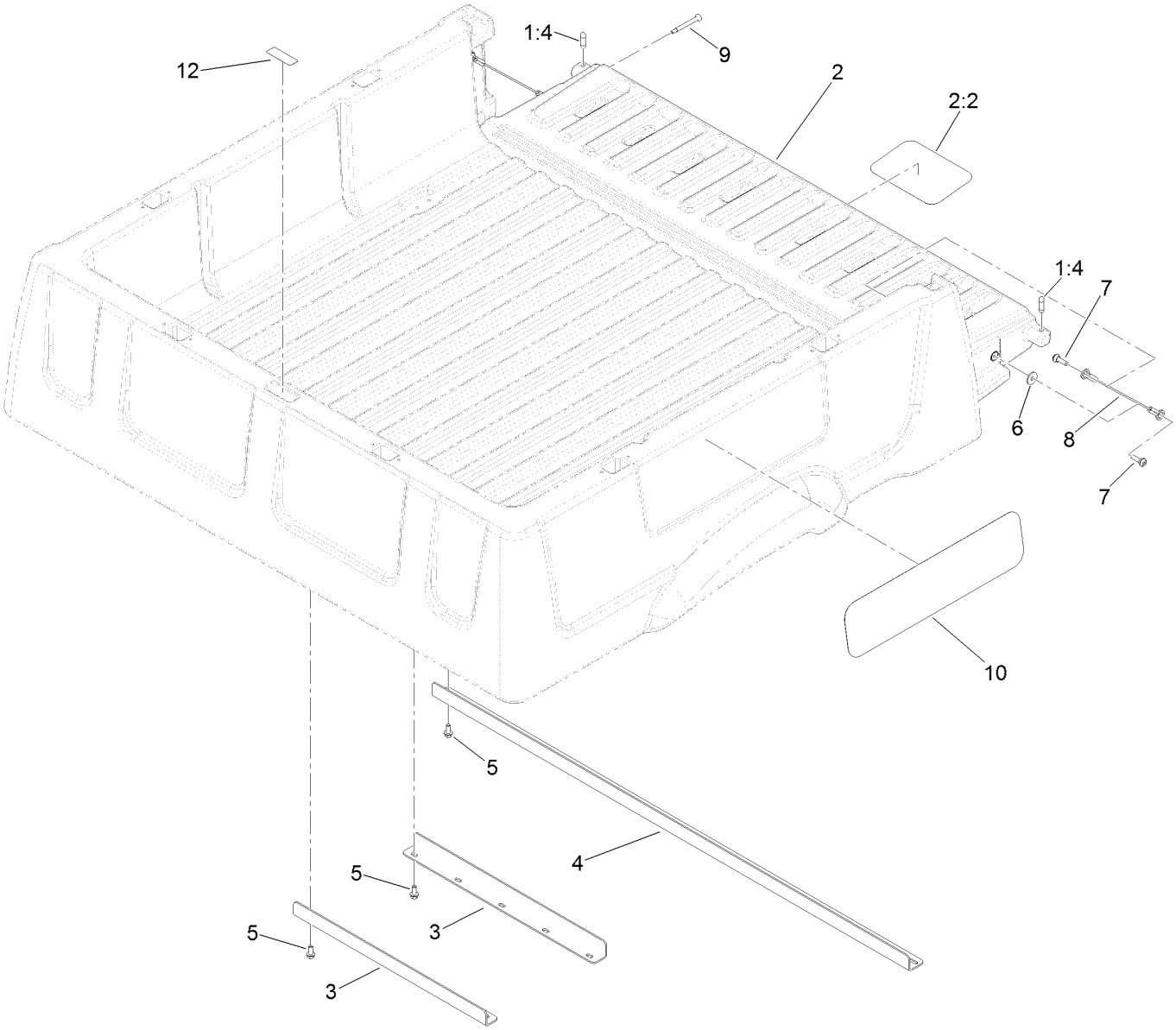


# Cargo Bed and Tailgate Service Assembly No. 133-0560

| Ref. | Part Number | Qty. | Description |
|---|---|---|---|
| 1 | | 1 | Cargo Bed/Tailgate ASM ●■ |
| 1:4 | 133-7146 | 2 | Plug-Tailgate, Anti-Rattle |
| 2 | 133-0561 | 1 | Tailgate ASM W/Decals |
| 2:2 | 104-7213 | 1 | Decal |
| 3 | 121-6314-03 | 2 | Brace-Bed, Middle |
| 4 | 121-6315-03 | 1 | Brace-Bed, Rear |
| 5 | 3234-5 | 16 | Screw-HHF |
| 6 | 115-7109 | 2 | Washer-Flat |
| 7 | 119-2267 | 4 | Screw-Shoulder, BHTF |
| 8 | 121-6343 | 2 | Lanyard-Tailgate |
| 9 | 127-7383 | 2 | Screw-Shoulder, Bh (Torx) |
| 10 | 120-4825 | 2 | Decal |
| 12 | 115-7739 | 1 | Decal-No Riders |

● Not illustrated

■ Not serviced separately

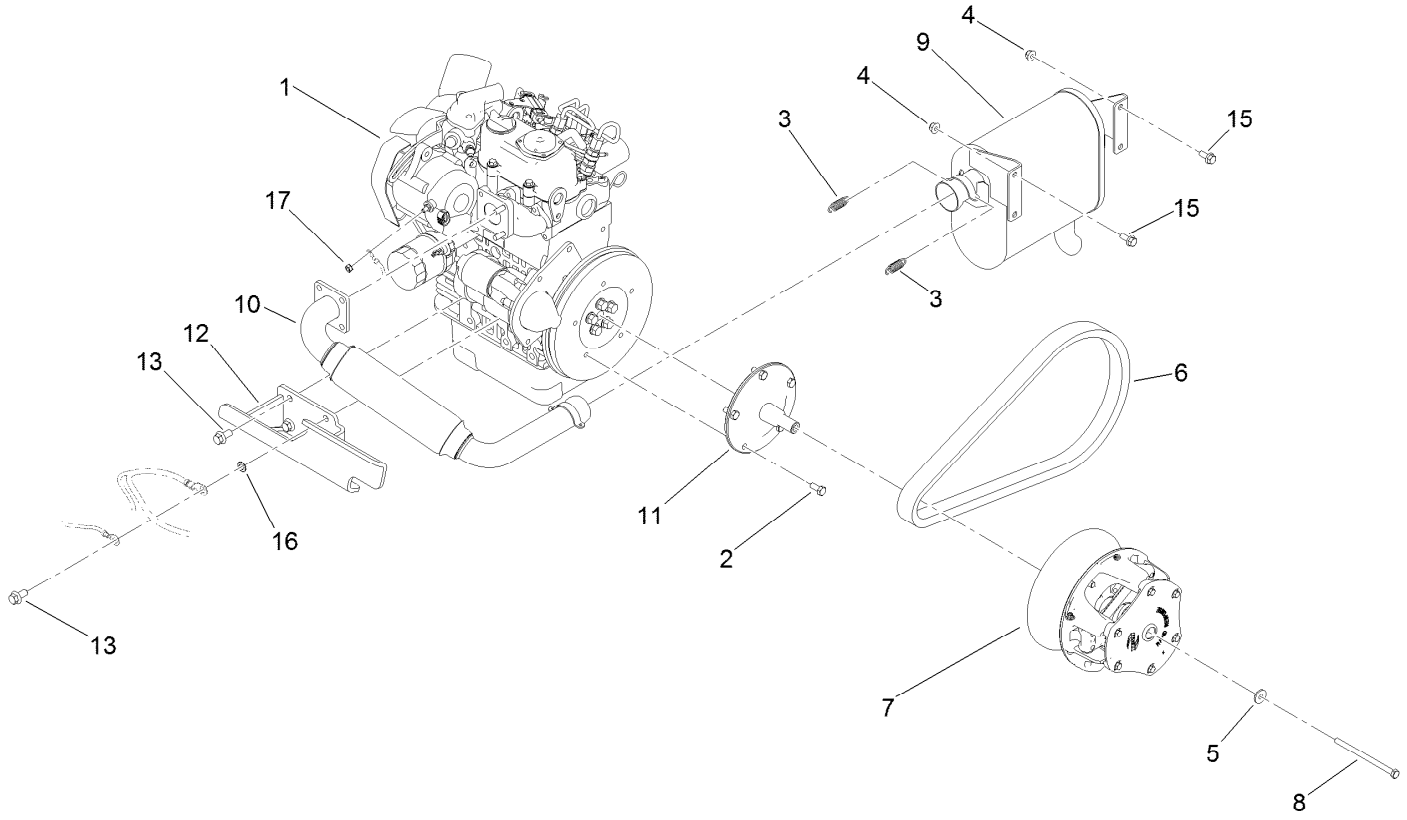


# Engine, Primary Clutch and Exhaust Assembly

| Ref. | Part Number | Qty. | Description |
|---|---|---|---|
| 1 | 138-6900 | 1 | Engine-Kubota, Z602 |
| 2 | 33114-016 | 5 | Screw-HH |
| 3 | 104-6478 | 2 | Spring-Extension |
| 4 | 104-8300 | 4 | Nut-HF, NI |
| 5 | 119-0724 | 1 | Washer-Flange |
| 6 | 119-0934 | 1 | Belt-Cvt |
| 7 | 119-9610 | 1 | Clutch-Primary |
| 8 | 107-0277 | 1 | Screw-HH |

| Ref. | Part Number | Qty. | Description |
|---|---|---|---|
| 9 | 119-9715 | 1 | Muffler-Exhaust |
| 10 | 119-9716 | 1 | Header-Exhaust |
| 11 | 119-9722 | 1 | Adapter-Clutch |
| 12 | 120-4940-03 | 1 | Front Engine Mount ASM |
| 13 | 120-4839 | 4 | Screw-HHF |
| 15 | 3234-47 | 4 | Screw-HHF |
| 16 | 3255-9 | 1 | Washer-Lock |
| 17 | 98-5845 | 1 | Nut-Hex |

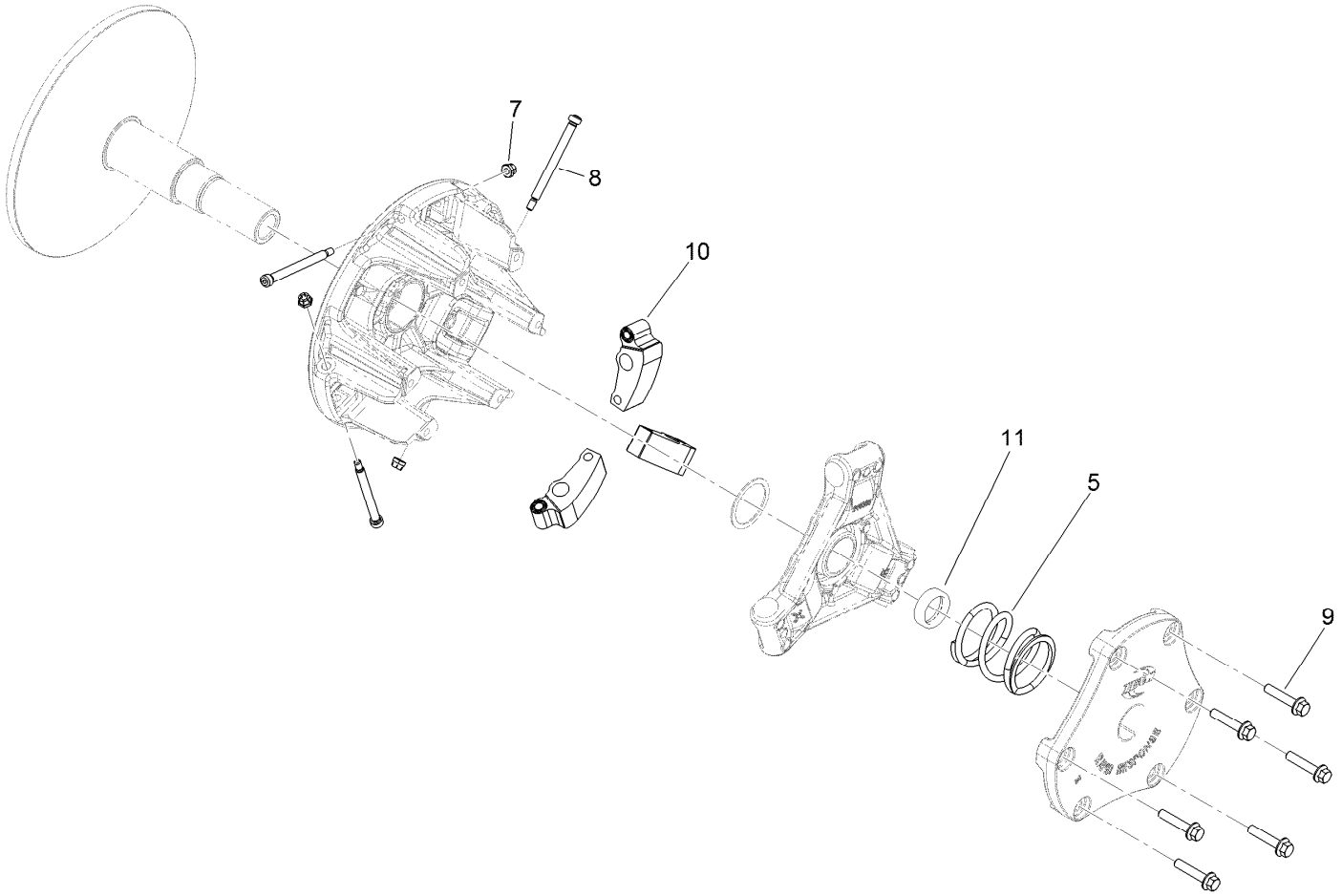


# Primary Clutch Assembly No. 119-9610

| *Ref.* | *Part Number* | *Qty.* | *Description* |
|---|---|---|---|
| 5 | 120-4807 | 1 | Spring-Compression |
| 7 | 119-6015 | 3 | Nut-Hex, Lock |
| 8 | 119-6016 | 3 | Screw-Shoulder |
| 9 | 119-6017 | 6 | Screw-HF |
| 10 | 119-6019 | 3 | Weight-Clutch |
| 11 | 120-4803 | 1 | Shim-Limiter, Speed |

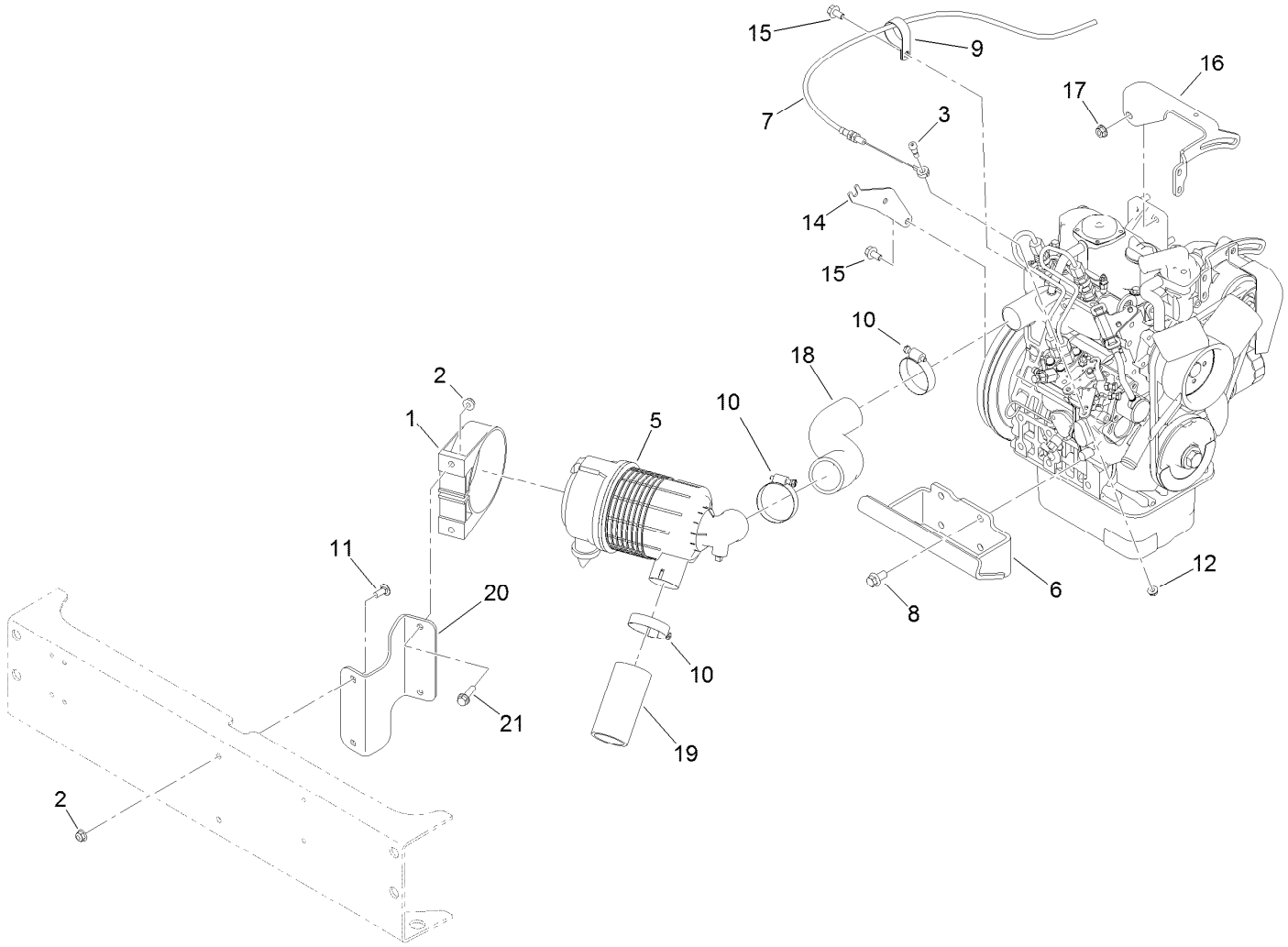


# Air Cleaner and Throttle Cable Assembly

| Ref. | Part Number | Qty. | Description |
|---|---|---|---|
| 1 | 95-5806 | 1 | Bracket-Mounting |
| 2 | 104-8300 | 4 | Nut-HF, NI |
| 3 | 119-4881 | 1 | Bolt-Shoulder |
| 5 | 119-9714 | 1 | Air Cleaner ASM |
| 6 | 119-9739-03 | 1 | Mount-Engine, Rear |
| 7 | 119-9746 | 1 | Cable-Throttle |
| 8 | 120-4839 | 4 | Screw-HHF |
| 9 | 2412-74 | 1 | R-Clamp |
| 10 | 2412-92 | 3 | Clamp-Hose |
| 11 | 3230-23 | 2 | Screw-CARR |

| Ref. | Part Number | Qty. | Description |
|---|---|---|---|
| 12 | 32128-33 | 1 | Nut-HF |
| 14 | 119-9453-03 | 1 | Mount-Cable, Throttle |
| 15 | 33104-016 | 2 | Screw-HHF |
| 16 | 120-4847-03 | 1 | Bracket-Alternator |
| 17 | 112-2844 | 1 | Nut-HF |
| 18 | 131-6665 | 1 | Hose-Intake |
| 19 | 93-6724 | 1 | Hose-Intake |
| 20 | 131-6664-03 | 1 | Bracket-Mount |
| 21 | 3234-36 | 2 | Screw-HHF |

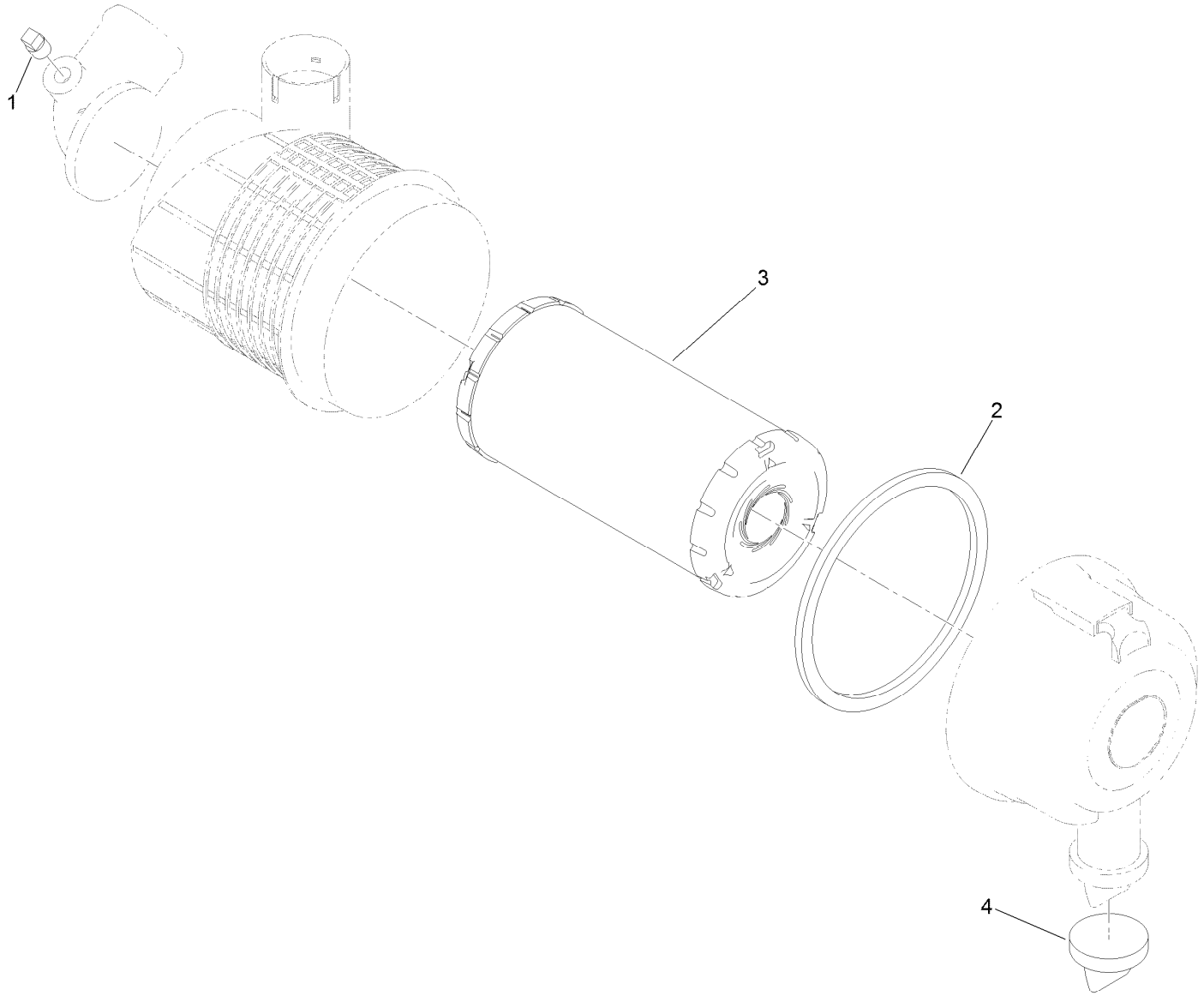


# Air Cleaner Assembly No. 119-9714

| *Ref.* | *Part Number* | *Qty.* | *Description* |
|---|---|---|---|
| 1 | 285-17 | 1 | Plug-Pipe |
| 2 | 106-6748 | 1 | Gasket |
| 3 | 108-3811 | 1 | Filter-Air |
| 4 | 104-0498 | 1 | Valve-Vacuator |

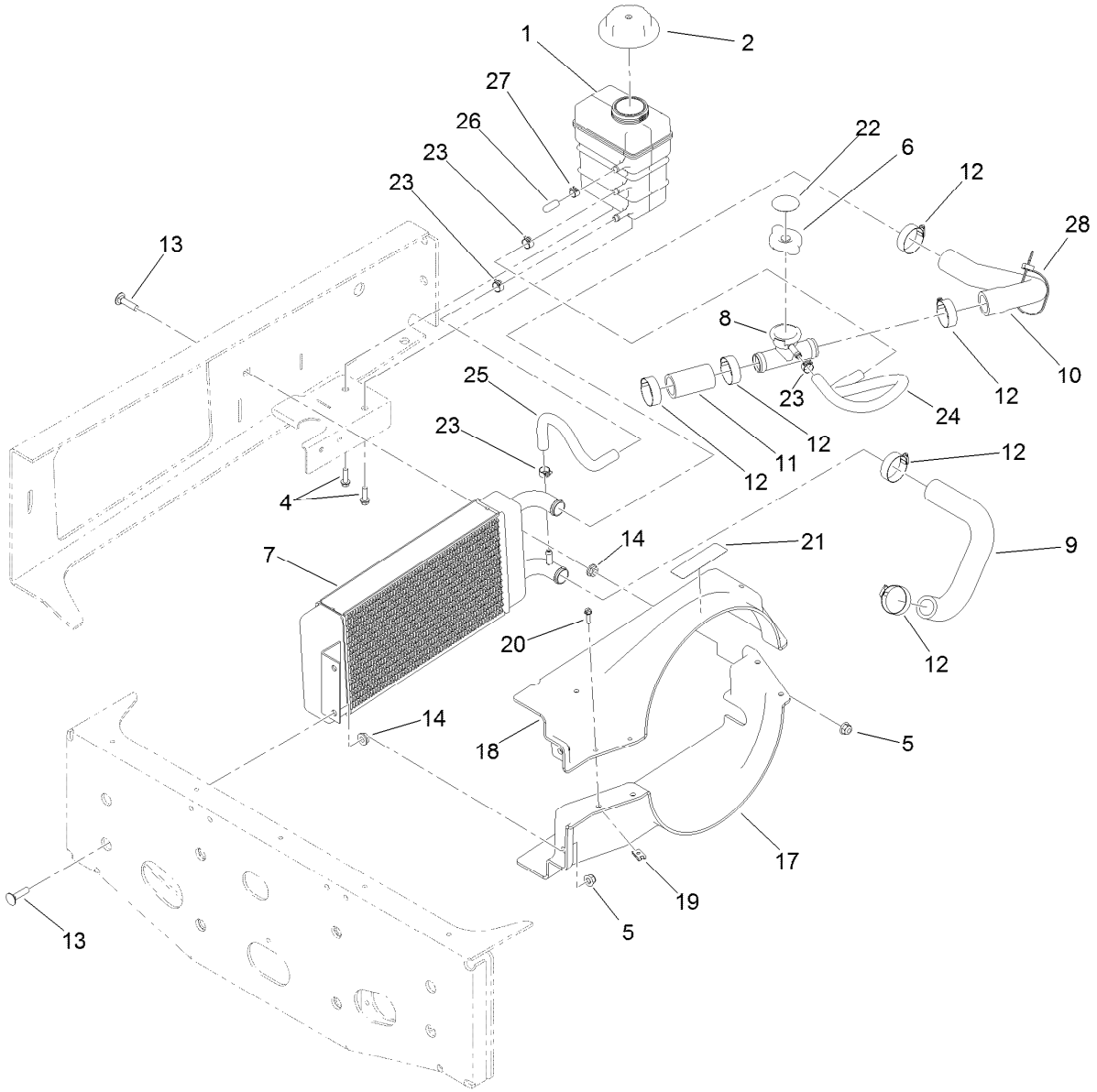


# Radiator Assembly

| Ref. | Part Number | Qty. | Description |
|---|---|---|---|
| 1 | 120-4856 | 1 | Tank-Surge |
| 2 | 120-4867 | 1 | Cap-Coolant, Threaded (15 PSI) |
| 4 | 46-8091 | 2 | Screw-HWH |
| 5 | 104-8300 | 3 | Nut-HF, NI |
| 6 | 120-4866 | 1 | Cap-System, Cooling |
| 7 | 119-0915 | 1 | Radiator |
| 8 | 119-9700 | 1 | Filler Neck ASM |
| 9 | 119-9708 | 1 | Hose-Radiator, Lower |
| 10 | 119-9709 | 1 | Hose-Radiator, Upper |
| 11 | 119-9711 | 1 | Hose-Straight |
| 12 | 2412-34 | 6 | Clamp-Hose |
| 13 | 3230-3 | 3 | Screw-CARR |

| Ref. | Part Number | Qty. | Description |
|---|---|---|---|
| 14 | 32128-20 | 3 | Nut-HF |
| 17 | 120-4828 | 1 | Shroud-Radiator, Lower |
| 18 | 120-4827 | 1 | Shroud-Radiator, Upper |
| 19 | 3290-277 | 4 | Nut-Speed |
| 20 | 32105-13 | 4 | Screw-HWH |
| 21 | 120-0627 | 1 | Decal-Warning |
| 22 | 106-6755 | 1 | Decal-Cap, Radiator |
| 23 | 92-2379 | 4 | Clamp-Hose |
| 24 | 136-1192 | 1 | Hose-Coolant |
| 25 | 120-4869 | 1 | Hose-Coolant |
| 26 | 115-2403 | 1 | Cap |
| 27 | 2412-146 | 1 | Clamp-Hose |
| 28 | 3290-378 | 1 | Tie-Cable |

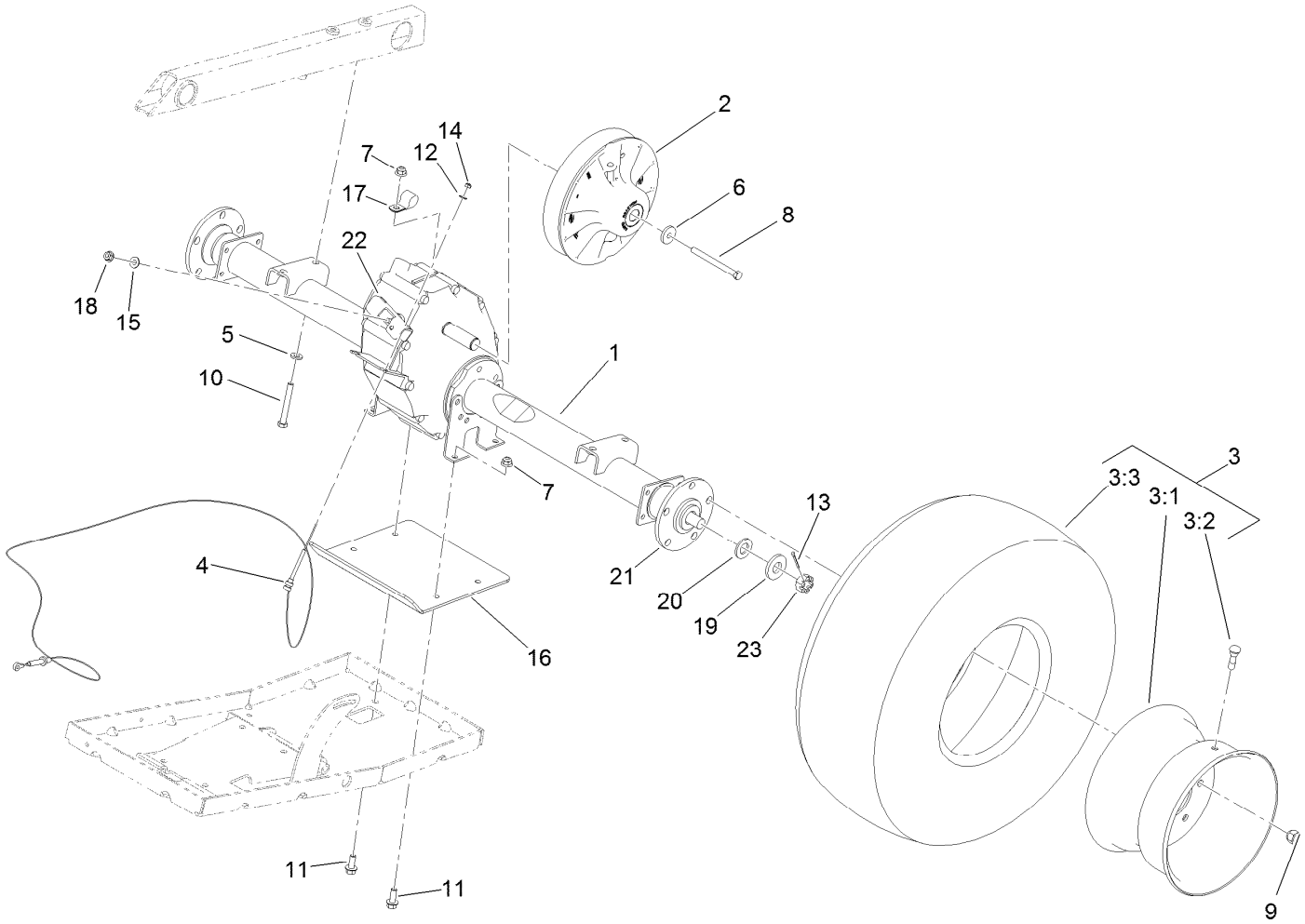


# Rear Axle Drive System Assembly

| Ref. | Part Number | Qty. | Description |
|---|---|---|---|
| 1 | 119-0760 | 1 | Transaxle ASM |
| 2 | 119-6011 | 1 | Secondary Clutch ASM |
| 3 | 131-8434 | 2 | Tire And Wheel ASM |
| 3:1 | 131-8435 | 1 | Wheel |
| 3:2 | 232-27 | 1 | Stem-Valve |
| 3:3 | 131-6667 | 1 | Tire |
| 4 | 104-6896 | 2 | Cable-Shift |
| 5 | 100-4852 | 4 | Washer-Hardened |
| 6 | 104-6563 | 1 | Washer-Stepped |
| 7 | 104-8301 | 4 | Nut-HF, NI |
| 8 | 119-0723 | 1 | Screw-HH, Lock |
| 9 | 242-50 | 10 | Nut-Lug |
| 10 | 323-14 | 4 | Screw-HH |

| Ref. | Part Number | Qty. | Description |
|---|---|---|---|
| 11 | 3234-11 | 4 | Screw-HHF |
| 12 | 3256-49 | 2 | Washer-Plain |
| 13 | 3272-12 | 2 | Pin-Cotter |
| 14 | 3296-2 | 2 | Nut-Lock, NI |
| 15 | 87-8640 | 1 | Washer-Flat |
| 16 | 119-9741-03 | 1 | Plate-Skid, Axle |
| 17 | 2412-4 | 1 | Clamp-R |
| 18 | 104-1672 | 1 | Nut-Lock |
| 19 | 133-0632 | 2 | Spacer |
| 20 | 104-1674 | 2 | Washer |
| 21 | 104-1675 | 2 | Hub |
| 22 | 104-6860 | 1 | Lever-Select |
| 23 | 104-1656 | 2 | Nut-Castle |

# Transaxle Assembly No. 119-0760

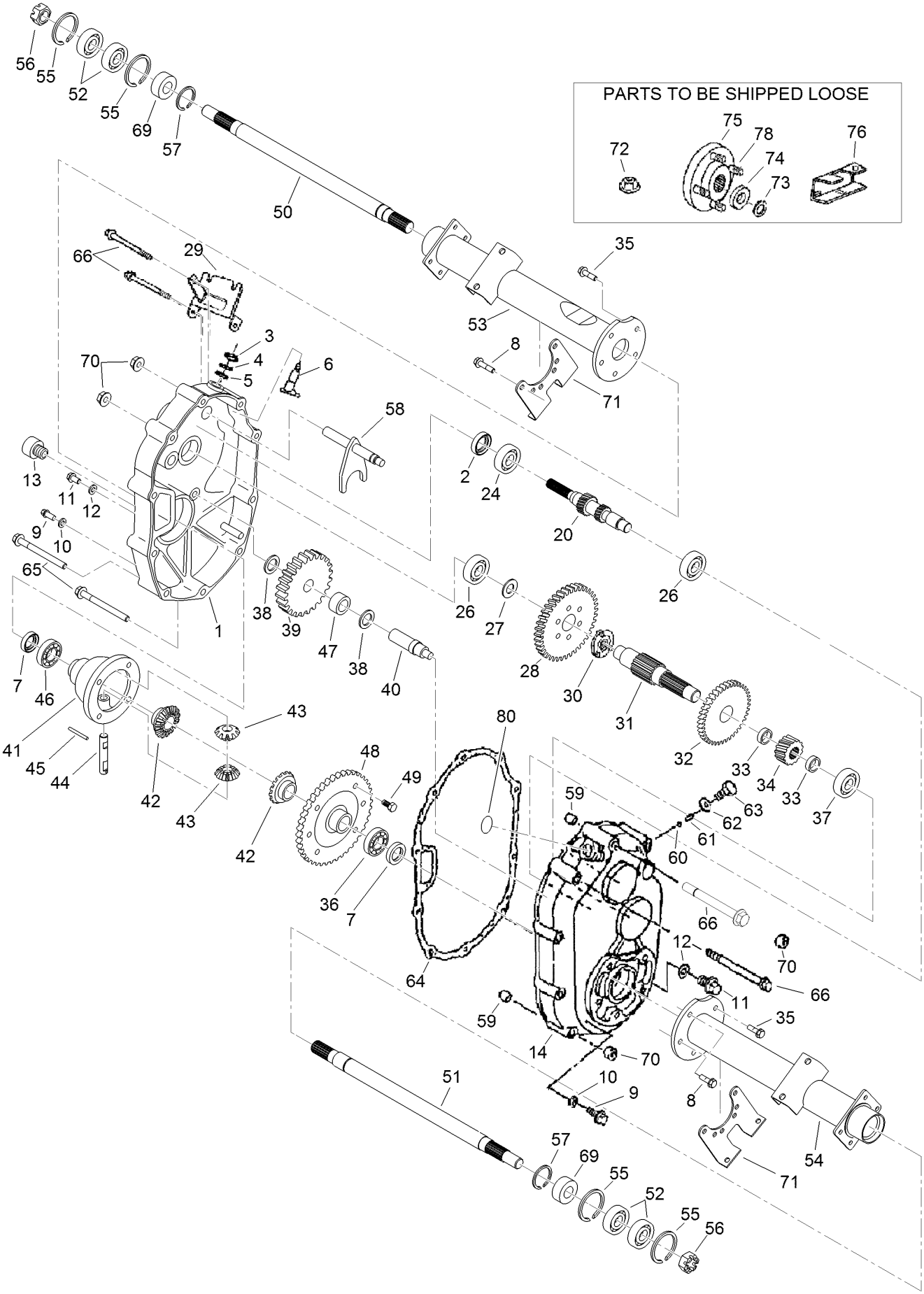

# Transaxle Assembly No. 119-0760 (continued)

| Ref. | Part Number | Qty. | Description |
|---|---|---|---|
| 1 | 104-1601 | 1 | Case-LH, Complete |
| 2 | 104-1602 | 1 | Seal-Oil |
| 3 | 104-1603 | 1 | Seal-Oil |
| 4 | 104-1604 | 1 | Ring-Snap |
| 5 | 104-1605 | 1 | Spacer |
| 6 | 104-1606 | 1 | Shaft-Selector |
| 7 | 104-1607 | 2 | Seal-Oil |
| 8 | 104-1608 | 4 | Bolt-Flange |
| 9 | 104-1609 | 2 | Plug-Check, Oil |
| 10 | 104-1610 | 2 | Gasket |
| 11 | 104-1611 | 2 | Plug-Drain, Oil |
| 12 | 104-1612 | 2 | Gasket |
| 13 | 104-1613 | 1 | Plug-Filler, Oil |
| 14 | 104-1614 | 1 | Case-Complete, RH |
| 20 | 104-7002 | 1 | Shaft-Input, Complete |
| 24 | 104-1624 | 1 | Bearing-Ball |
| 26 | 104-1626 | 2 | Bearing-Ball |
| 27 | 104-1627 | 1 | Spacer |
| 28 | 104-1628 | 1 | Gear |
| 29 | 104-1629 | 1 | Bracket-Wire, Change |
| 30 | 104-1630 | 1 | Clutch-Pin |
| 31 | 104-1631 | 1 | Shaft-Center |
| 32 | 104-1632 | 1 | Gear |
| 33 | 104-1633 | 2 | Collar |
| 34 | 104-1634 | 1 | Gear |
| 35 | 104-1635 | 6 | Bolt-Flange |
| 36 | 104-1636 | 1 | Bearing-Ball |
| 37 | 104-1637 | 1 | Bearing-Ball |
| 38 | 104-1638 | 2 | Spacer |
| 39 | 104-1639 | 1 | Gear |
| 40 | 104-1640 | 1 | Shaft-Counter |
| 41 | 104-1641 | 1 | Case-Differential |
| 42 | 104-1642 | 2 | Gear-Side, Differential |
| 43 | 104-1643 | 2 | Pinion-Differential |
| 44 | 104-1644 | 1 | Shaft-Differential |
| 45 | 104-1645 | 1 | Pin |
| 46 | 104-1646 | 1 | Bearing-Ball |
| 47 | 104-1647 | 1 | Bearing-Needle |
| 48 | 104-1648 | 1 | Gear |
| 49 | 104-1649 | 6 | Bolt |
| 50 | 104-1650 | 1 | Shaft-Axle, LH |
| 51 | 104-1651 | 1 | Shaft-Axle, RH |
| 52 | 104-1652 | 4 | Bearing-Ball |
| 53 | 104-1653 | 1 | Case-Axle, LH |
| 54 | 104-1654 | 1 | Case-Axle, RH |
| 55 | 104-1655 | 4 | Ring-Snap |
| 56 | 104-1656 | 2 | Nut-Castle |
| 57 | 104-1657 | 2 | Ring-Snap |
| 58 | 104-6870 | 1 | Shaft-Shift, Complete |
| 59 | 104-1659 | 2 | Knock-Pipe |
| 60 | 104-1660 | 1 | Ball-Steel |
| 61 | 104-1661 | 1 | Spring |
| 62 | 104-1662 | 1 | Gasket |
| 63 | 104-1663 | 1 | Bolt |
| 64 | 104-1664 | 1 | Gasket |
| 65 | 104-1665 | 6 | Bolt-Flange |
| 66 | 104-1666 | 4 | Bolt-Flange |
| 69 | 104-6867 | 2 | Collar |
| 70 | 33004-00 | 10 | Nut-HF |
| 71 | 104-1671 | 2 | Bracket-Axle |
| 72 | 104-1672 | 1 | Nut-Lock |
| 73 | 104-1673 | 2 | Washer-Spring |
| 74 | 104-1674 | 2 | Washer |
| 75 | 104-1675 | 2 | Hub |
| 76 | 104-6860 | 1 | Lever-Select |
| 78 | 104-8649 | 10 | Stud |
| 80 | 121-9718 | 1 | Cap-Seal |

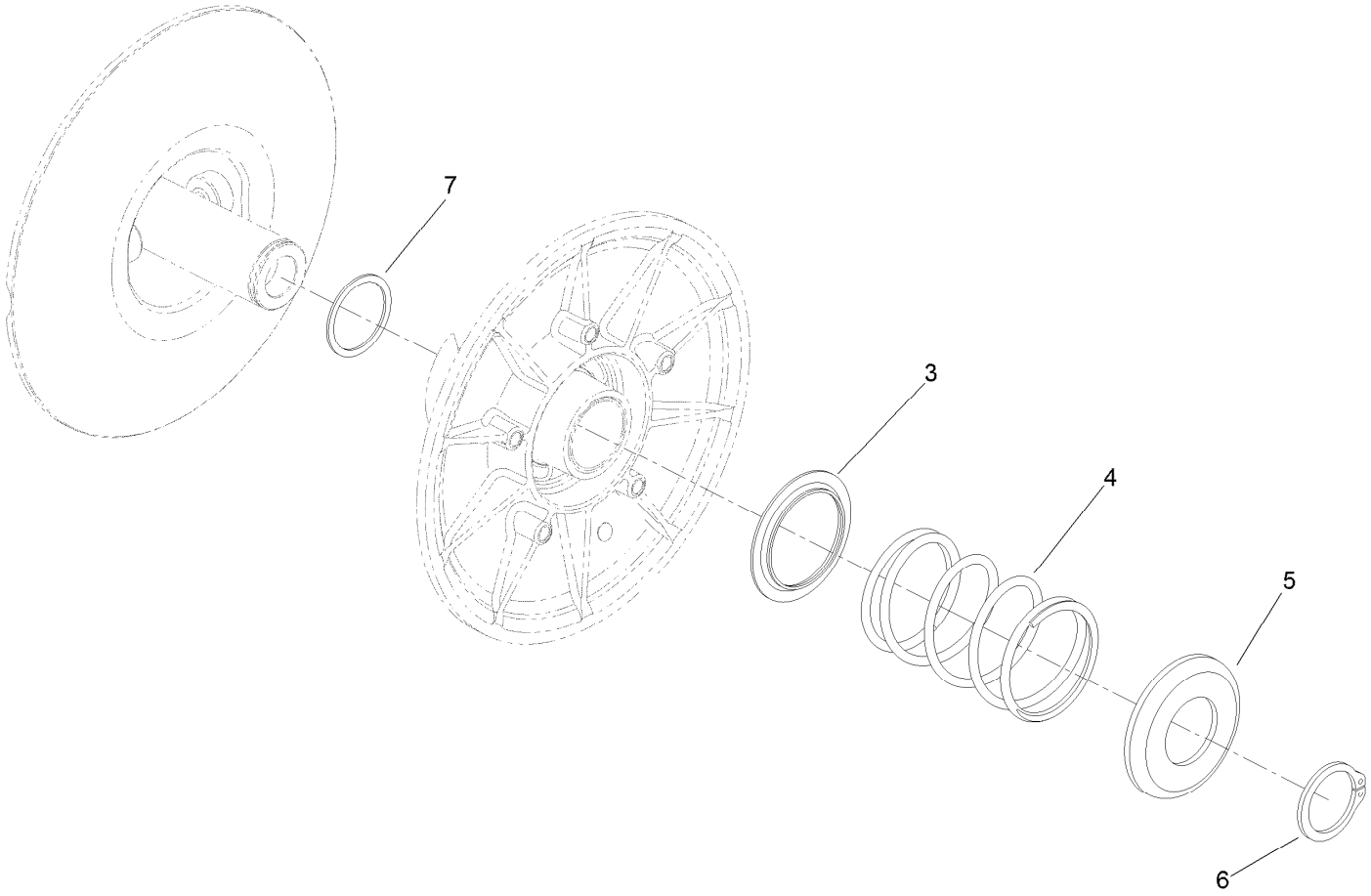


# Secondary Clutch Assembly No. 119-6011

| *Ref.* | *Part Number* | *Qty.* | *Description* |
|---|---|---|---|
| 3 | 119-0809 | 1 | Cup-Spring Retainer, Inner |
| 4 | 119-9360 | 1 | Spring-Compression, Black/Almond |
| 5 | 119-0810 | 1 | Cup-Spring Retainer, Outer |
| 6 | 119-0811 | 1 | Ring-Retaining |
| 7 | 119-6018 | 1 | Shim-Thrust |

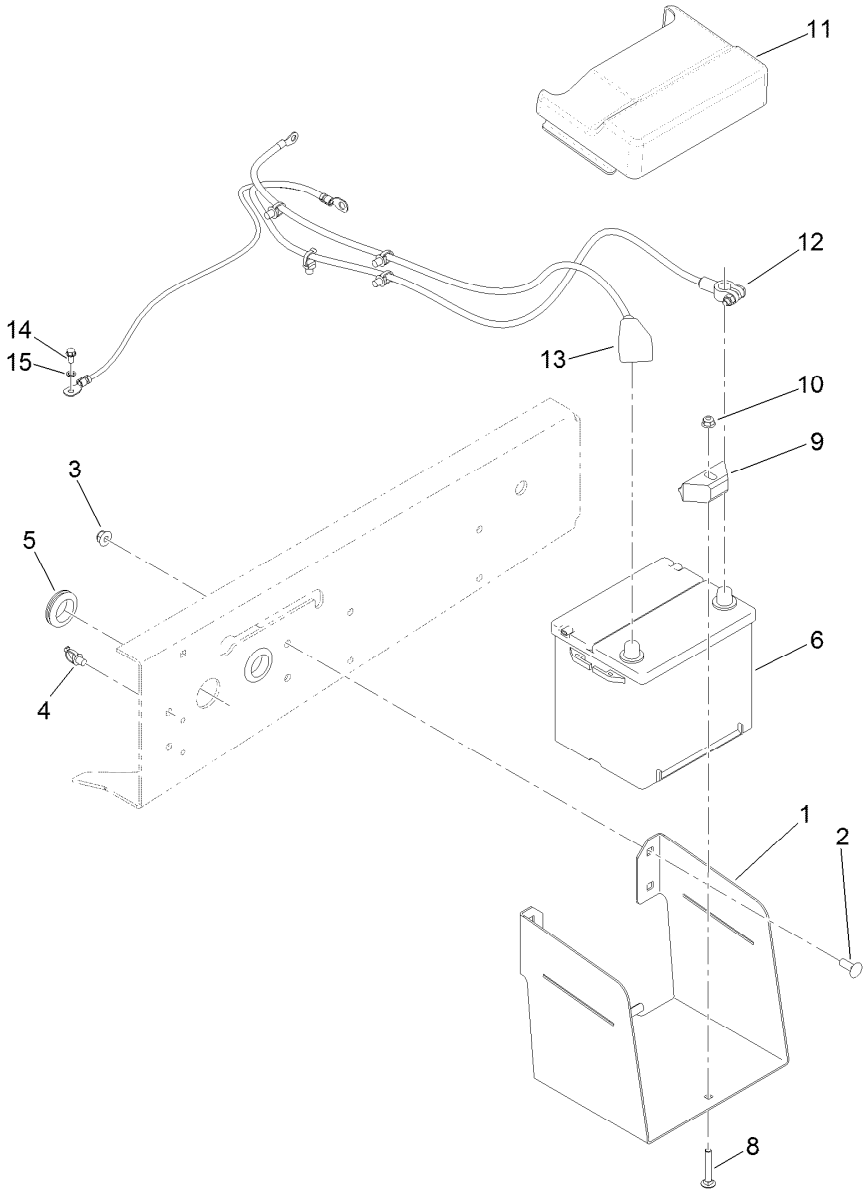


# Battery Assembly

| Ref. | Part Number | Qty. | Description |
|---|---|---|---|
| 1 | 119-9495-03 | 1 | Tray-Battery |
| 2 | 3231-22 | 4 | Screw-CARR |
| 3 | 104-8301 | 4 | Nut-HF, NI |
| 4 | 32180-030 | 6 | Clip-Tie |
| 5 | 120-4831 | 2 | Grommet |
| 6 | 106-5187 | 1 | Battery-Dry |
| 8 | 3230-6 | 1 | Bolt-CARR,Full Thrd |
| 9 | 66-2490 | 1 | Retainer-Battery |
| 10 | 104-8300 | 1 | Nut-HF, NI |
| 11 | 119-9496 | 1 | Cover-Battery |
| 12 | 120-4849 | 1 | Cable-Battery, Negative |
| 13 | 120-4850 | 1 | Cable-Battery, Positive |
| 14 | 32144-4 | 1 | Screw-HWH |
| 15 | 3254-16 | 1 | Washer-Lock/Int |

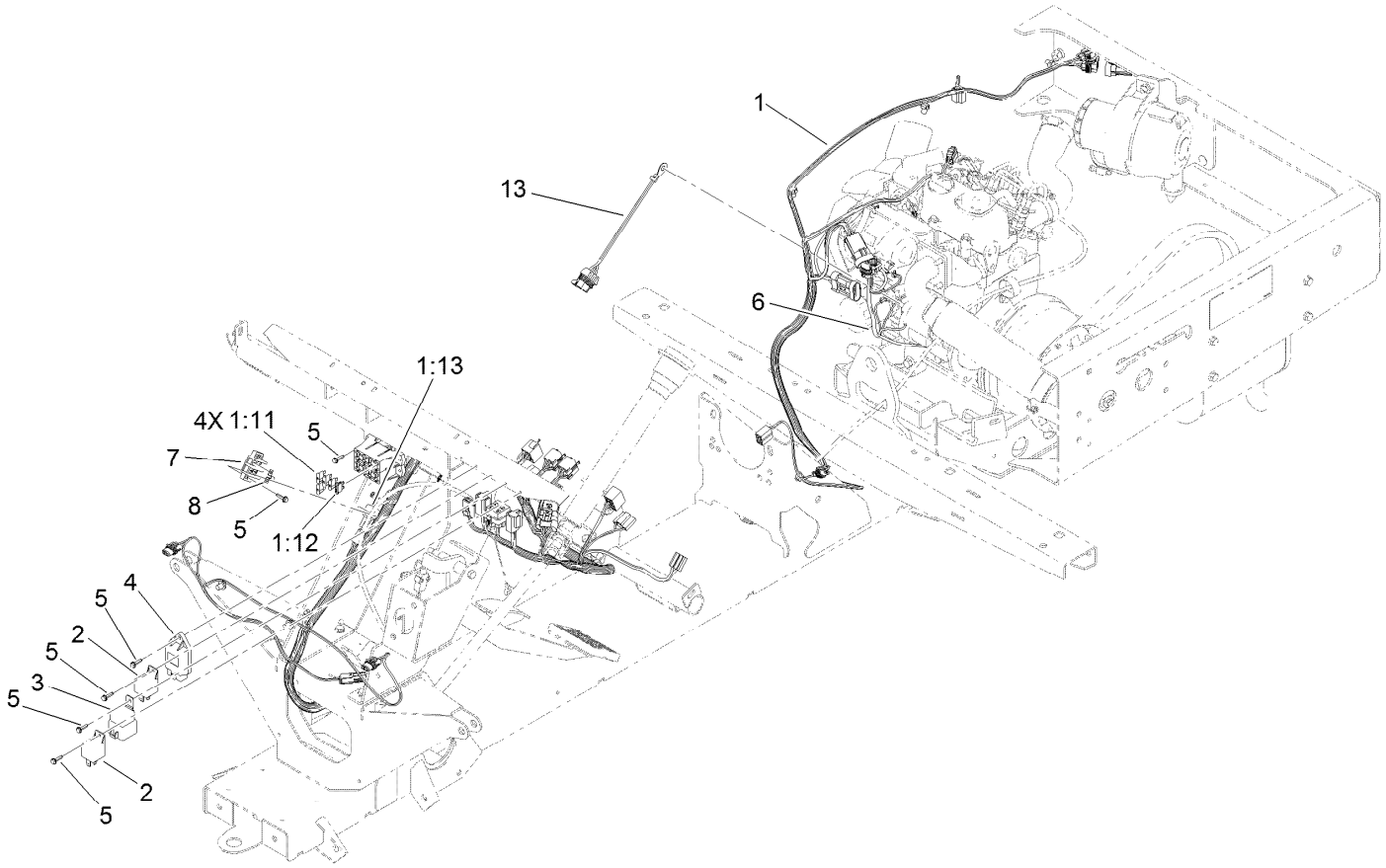


# Electrical Assembly

| Ref. | Part Number | Qty. | Description |
|---|---|---|---|
| 1 | 122-0734 | 1 | Harness-Wire, Main |
| 1:11 | 218-578 | 4 | Fuse-Blade, 10 Amp |
| 1:12 | 109355 | 1 | Fuse-Blade, 15 Amp |
| 1:13 | 104-4022 | 1 | Resistor-75 Ohm |
| 1:24 | 109103 | 1 | Fuse-Blade, 30 Amp ● |
| 2 | 99-7435 | 2 | Relay |
| 3 | 99-7430 | 1 | Relay-Mini 280 |
| 4 | 98-7611 | 1 | Controller-Glow |
| 5 | 100-4351 | 8 | Screw-HWH |
| 6 | 120-3961 | 1 | Harness-Wire, Engine |
| 7 | 42862 | 1 | Block-Terminal, Ground |
| 8 | 42863 | 1 | Strip-Jumper |
| 13 | 99-3441 | 1 | Harness-Wire, Fusible Link |

● Not illustrated

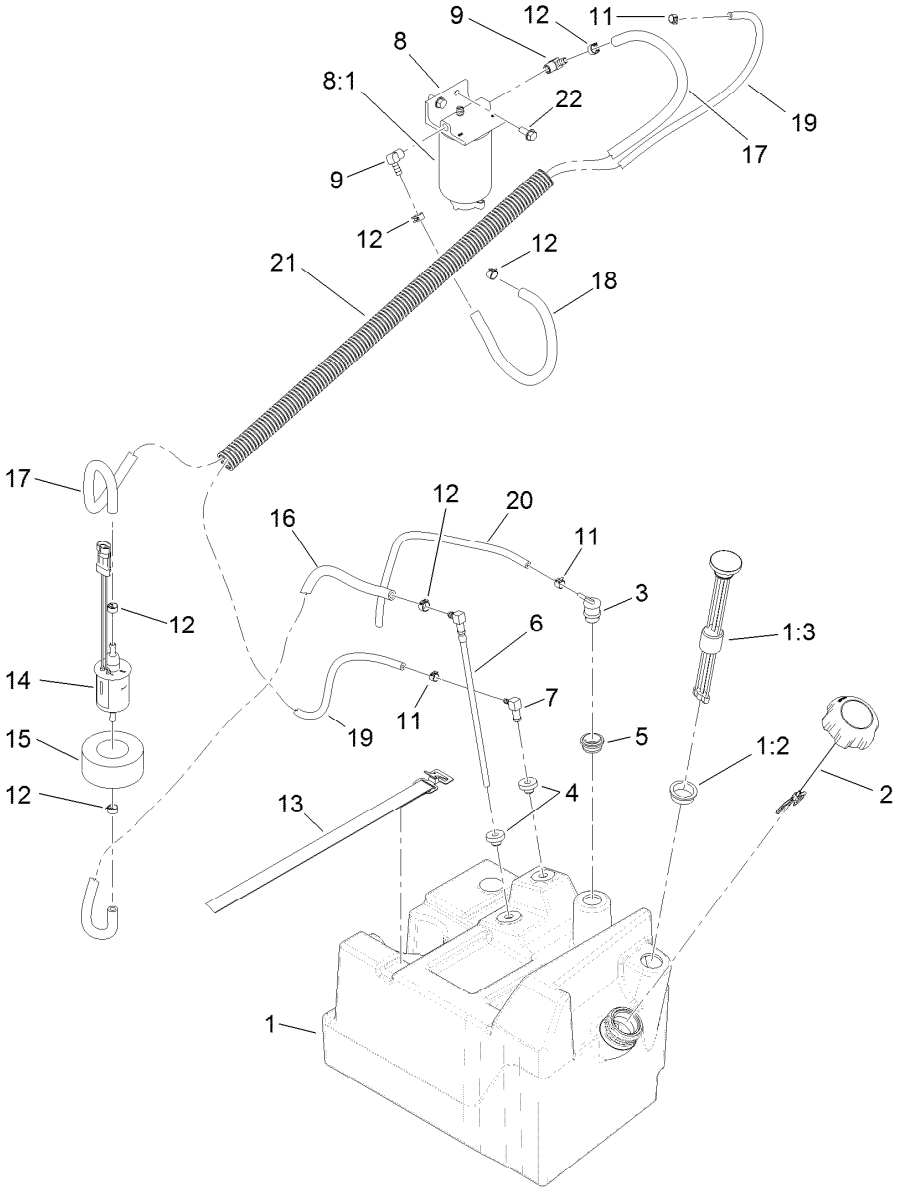


# Fuel Tank Assembly

| Ref. | Part Number | Qty. | Description |
|---|---|---|---|
| 1 | 119-9723 | 1 | Fuel Tank ASM |
| 1:2 | 95-8972 | 1 | Grommet |
| 1:3 | 99-7262 | 1 | Gauge-Fuel |
| 2 | 115-7789 | 1 | Cap-Fuel, Diesel |
| 3 | 114-0285 | 1 | Valve-Rollover |
| 4 | 46-6560 | 2 | Bushing |
| 5 | 114-0284 | 1 | Grommet |
| 6 | 110-9689 | 1 | Pipe-Stand |
| 7 | 100-1596 | 1 | Fitting-90 DEG |
| 8 | 110-9044 | 1 | Separator-Filter |
| 8:1 | 110-9049 | 1 | Filter-Spin On |
| 9 | 353-781 | 2 | Fitting-HYD, 90 |

| Ref. | Part Number | Qty. | Description |
|---|---|---|---|
| 11 | 2412-146 | 3 | Clamp-Hose |
| 12 | 92-2379 | 6 | Clamp-Hose |
| 13 | 3339-175 | 1 | Strapping-Web |
| 14 | 110-8806 | 1 | Pump-Fuel |
| 15 | 119-9749 | 1 | Holder-Pump, Fuel |
| 16 | 108-3284 | 1 | Hose-Fuel |
| 17 | 110-3259 | 1 | Hose-Fuel |
| 18 | 114-4028 | 1 | Hose-Fuel |
| 19 | 117-6395 | 1 | Hose-Vent, Tank |
| 20 | 110-8255 | 1 | Hose-Fuel |
| 21 | 120-4829 | 1 | Conduit-Corregated |
| 22 | 32144-11 | 2 | Screw-HWHTF |

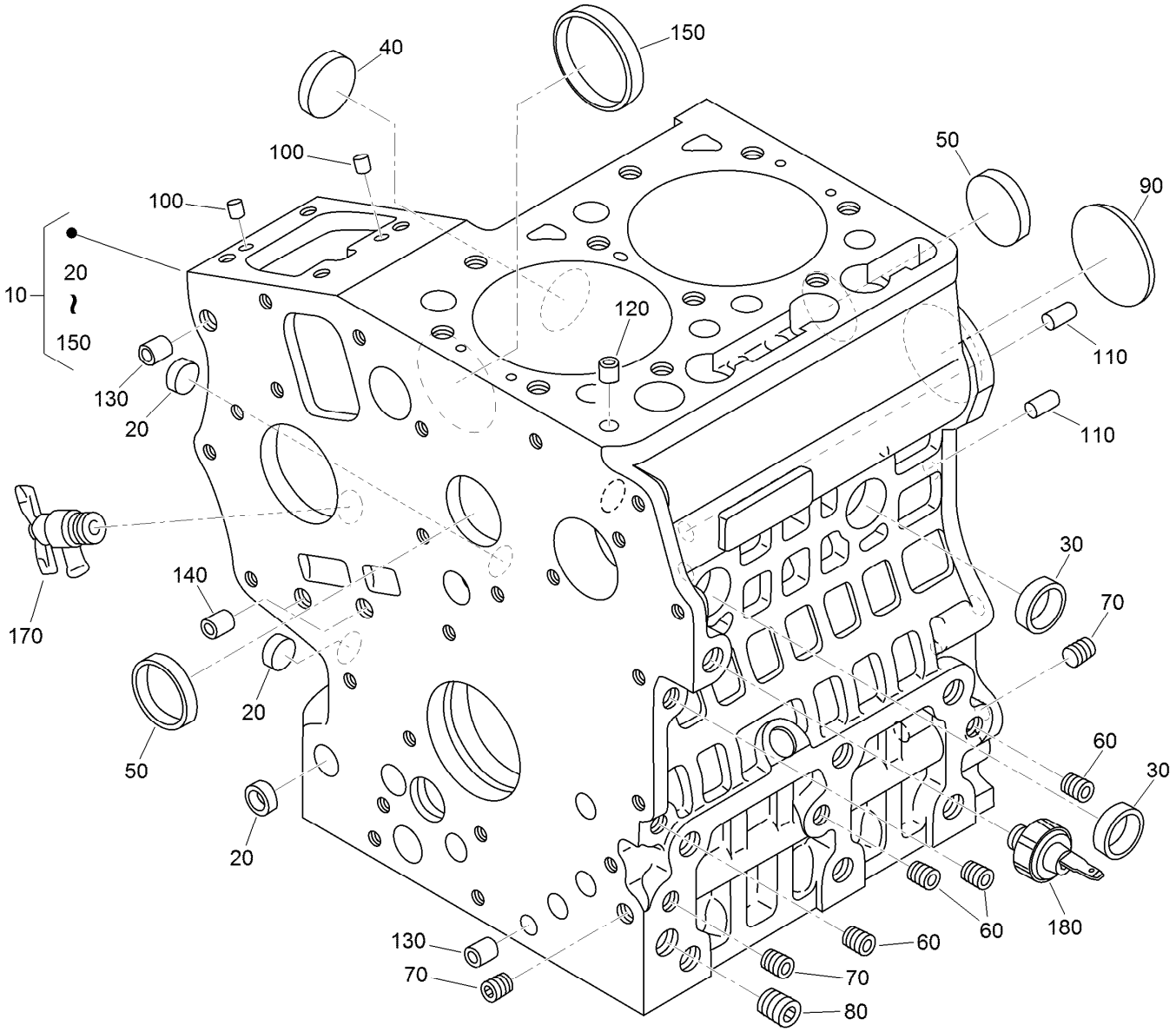


# Crankcase Assembly

| Ref. | Part Number | Qty. | Description |
|---|---|---|---|
| 10 | 130-1485 | 1 | Crankcase ASM |
| 20 | 100-2019 | 3 | Cap-Sealing |
| 30 | 100-2020 | 2 | Cap-Sealing |
| 40 | 110-3702 | 1 | Cap-Sealing |
| 50 | 98-9398 | 2 | Cap-Sealing |
| 60 | 98-9687 | 4 | Plug |
| 70 | 98-7487 | 3 | Plug |
| 80 | 98-7488 | 1 | Plug |
| 90 | 100-1851 | 1 | Plug-Expansion |

| Ref. | Part Number | Qty. | Description |
|---|---|---|---|
| 100 | 98-9375 | 2 | Pin-Straight |
| 110 | 98-9377 | 2 | Pin-Straight |
| 120 | 98-7506 | 1 | Pin-Pipe |
| 130 | 100-2051 | 2 | Pin-Pipe |
| 140 | 100-2051 | 2 | Pin-Pipe |
| 150 | 100-1991 | 1 | Cover-Fuel, Camshaft |
| 170 | 120-3121 | 1 | Draincock ASM |
| 180 | 98-9416 | 1 | Switch-Oil |

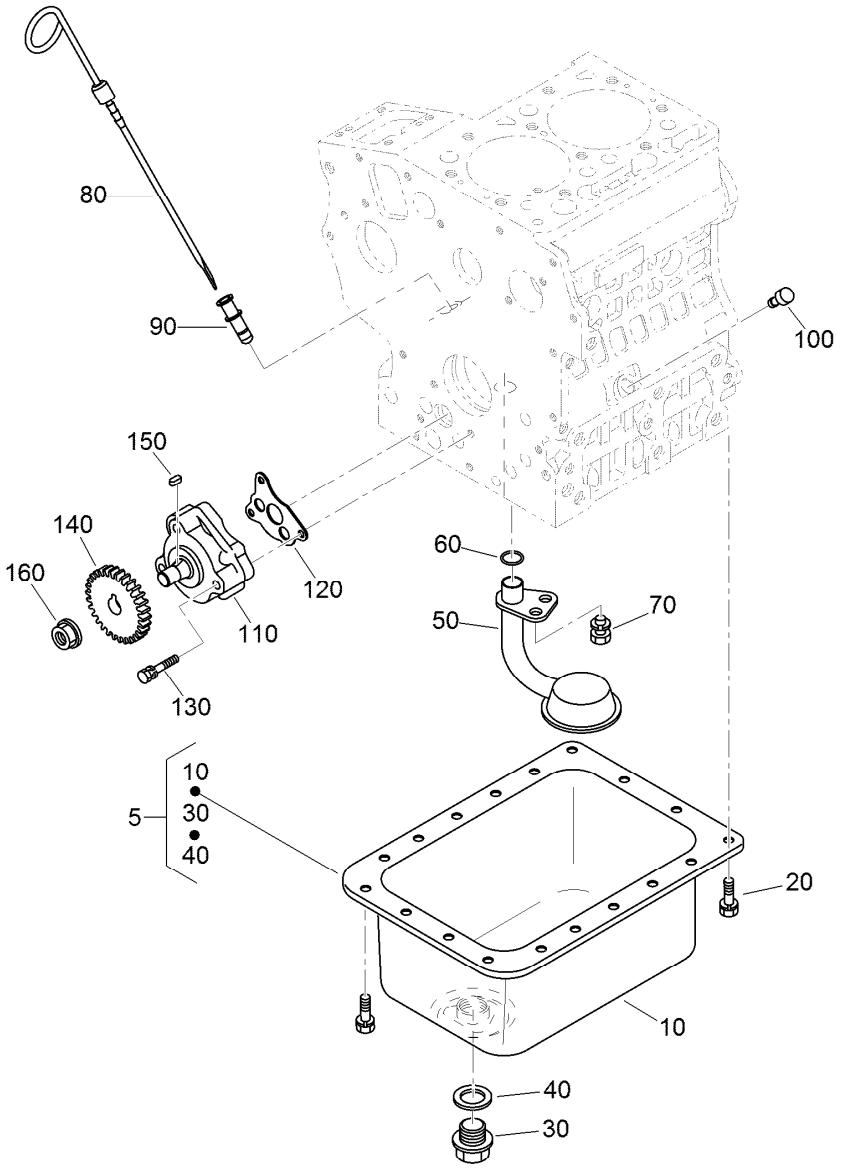


# Oil Pan, Oil Pump and Dipstick Assembly

| Ref. | Part Number | Qty. | Description |
|---|---|---|---|
| 5 | 121-3843 | 1 | Oil Pan Kit |
| 10 | 121-3842 | 1 | Oil Pan ASM |
| 20 | 98-9350 | 18 | Bolt |
| 30 | 98-9686 | 1 | Plug-Drain |
| 40 | 110-9715 | 1 | Gasket-Pan, Oil |
| 50 | 100-2001 | 1 | Strainer-Pickup, Oil |
| 60 | 105-3776 | 1 | O-Ring |
| 70 | 100-9195 | 1 | Bolt |
| 80 | 110-3719 | 1 | Gauge-Oil |

| Ref. | Part Number | Qty. | Description |
|---|---|---|---|
| 90 | 105-4580 | 1 | Guide-Gauge, Oil |
| 100 | 110-3720 | 1 | Plug-Gauge, Oil |
| 110 | 100-2002 | 1 | Oil Pump ASM |
| 120 | 100-2003 | 1 | Gasket-Pump, Oil |
| 130 | 100-1923 | 3 | Bolt |
| 140 | 130-1419 | 1 | Gear-Drive, Oil Pump |
| 150 | 98-7658 | 1 | Key-Feather |
| 160 | 100-1779 | 1 | Nut-Flange |

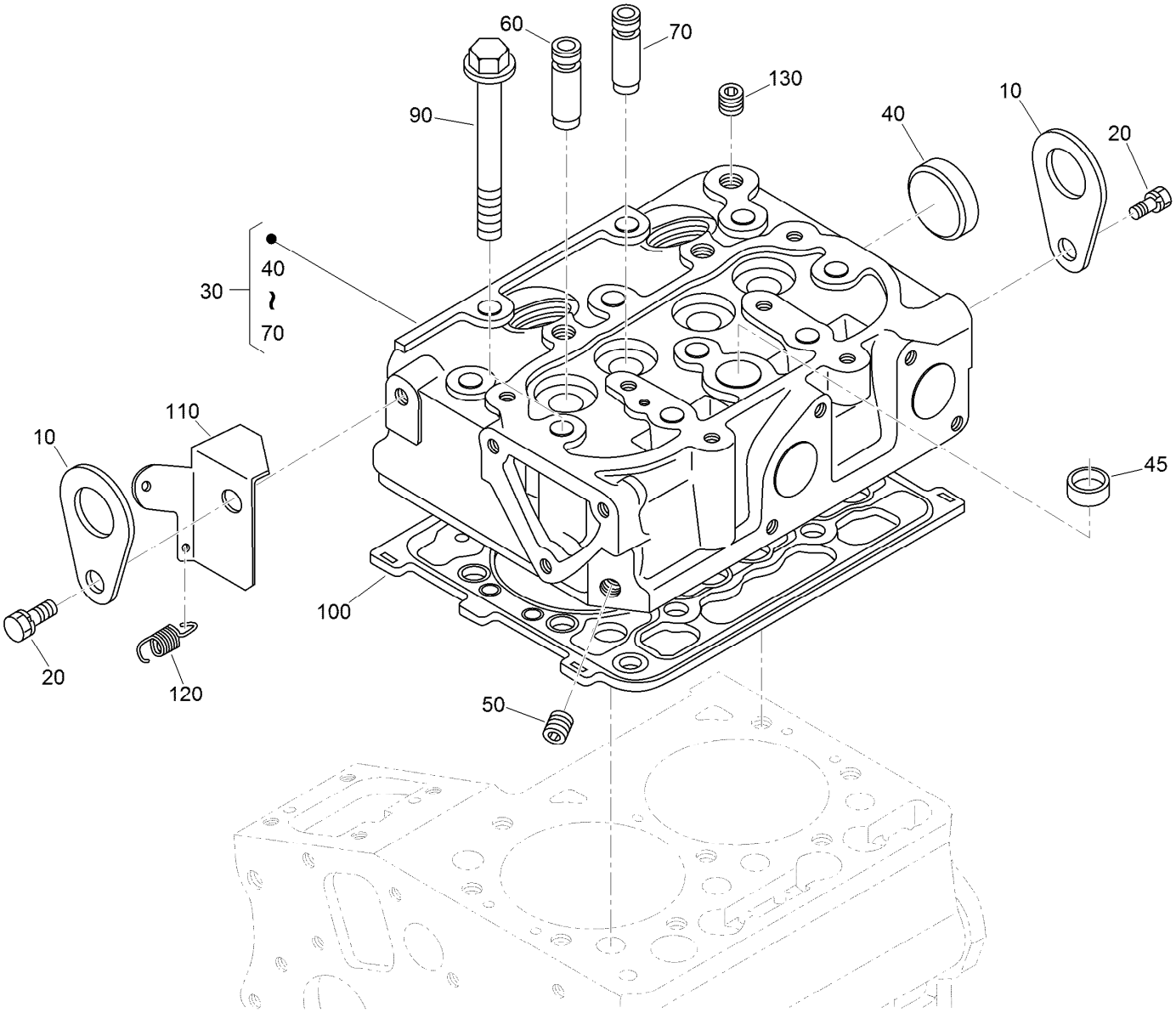


# Cylinder Head Assembly

| Ref. | Part Number | Qty. | Description |
|---|---|---|---|
| 10 | 98-7531 | 2 | Hook-Engine |
| 20 | 98-7526 | 2 | Bolt |
| 30 | 121-3823 | 1 | Cylinder Head ASM |
| 40 | 105-3705 | 1 | Cap-Sealing |
| 45 | 98-9389 | 1 | Cap-Sealing |
| 50 | 98-9687 | 1 | Plug |
| 60 | 100-1882 | 2 | Guide-Valve, Inlet |
| 70 | 100-1883 | 2 | Guide-Valve, Exhaust |
| 90 | 100-1820 | 10 | Bolt-Head, Cylinder |
| 100 | 121-3824 | 1 | Gasket-Head, Cylinder |
| 110 | 121-3810 | 1 | Stay |
| 120 | 121-3820 | 1 | Spring-Return |
| 130 | 98-9444 | 1 | Plug |

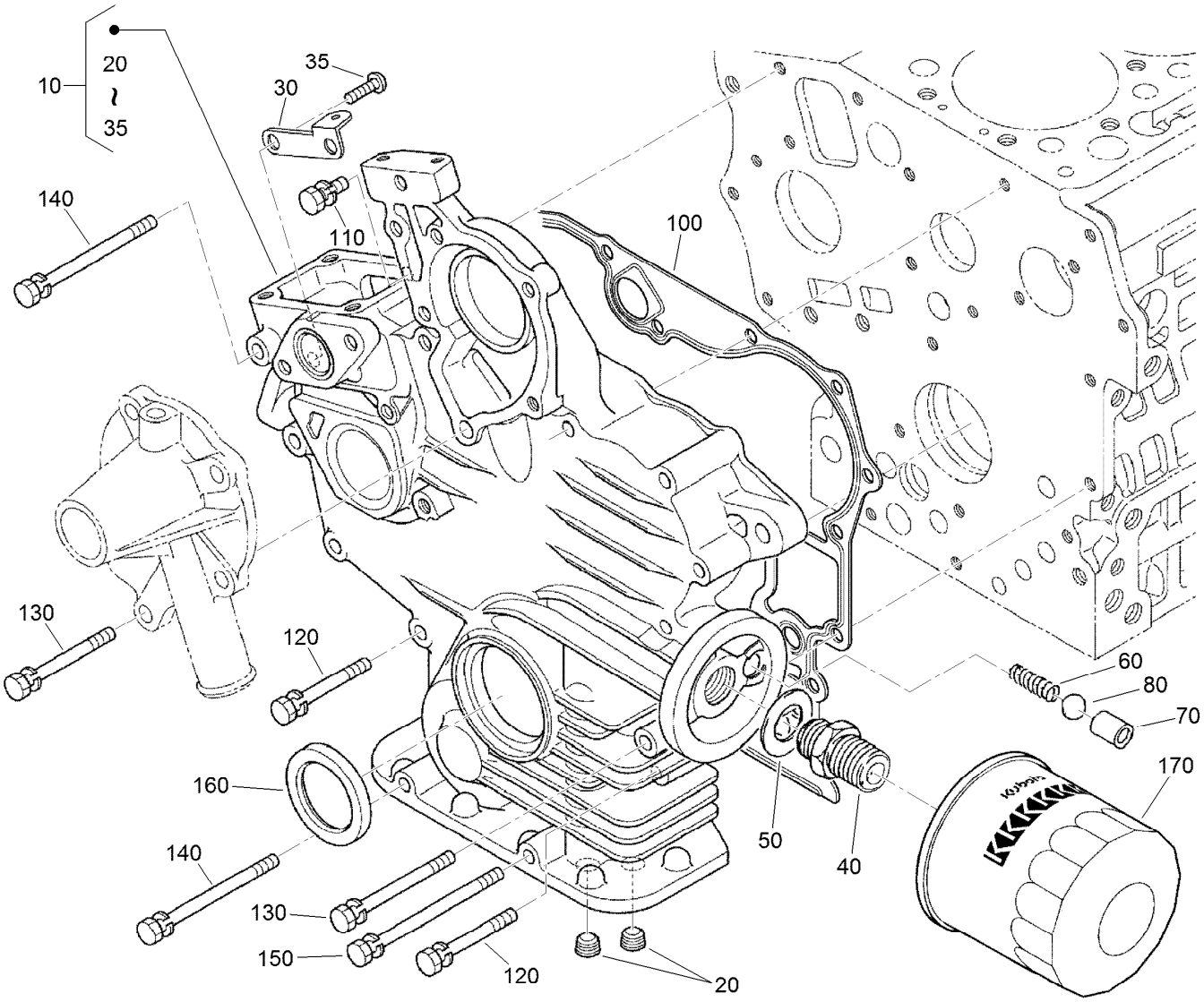


# Gear Case and Oil Filter Cartridge Assembly

| Ref. | Part Number | Qty. | Description |
|---|---|---|---|
| 10 | 110-3707 | 1 | Case-Gear |
| 20 | 98-7488 | 2 | Plug |
| 30 | 110-3708 | 1 | Stay-Spring, Start |
| 35 | 100-2040 | 2 | Screw |
| 40 | 98-9388 | 1 | Joint-Pipe |
| 50 | 100-1926 | 1 | Washer-Plain |
| 60 | 100-2004 | 1 | Spring |
| 70 | 100-1894 | 1 | Seat-Valve |
| 80 | 100-1792 | 1 | Ball |

| Ref. | Part Number | Qty. | Description |
|---|---|---|---|
| 100 | 117-0327 | 1 | Gasket-Case, Gear |
| 110 | 127-0403 | 1 | Bolt-Flange |
| 120 | 125-9063 | 9 | Bolt-Sems |
| 130 | 100-1922 | 2 | Bolt |
| 140 | 98-9357 | 2 | Bolt |
| 150 | 110-3710 | 1 | Bolt |
| 160 | 120-7852 | 1 | Seal-Oil |
| 170 | 115-8189 | 1 | Filter-Oil, Engine |

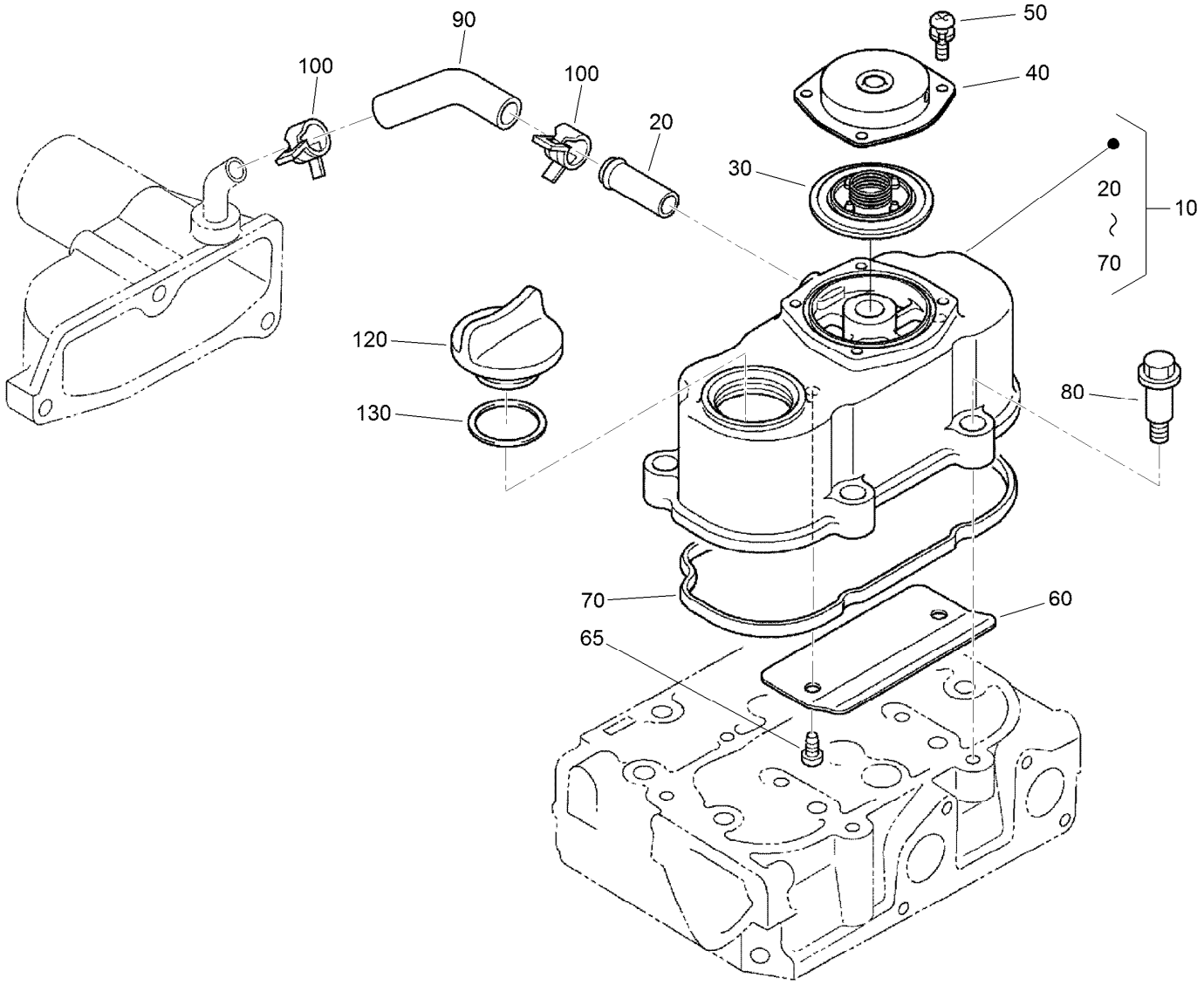


# Cylinder Head Cover Assembly

| *Ref.* | *Part Number* | *Qty.* | *Description* |
|---|---|---|---|
| 10 | 121-3841 | 1 | Cylinder Head Cover ASM |
| 20 | 98-9580 | 1 | Pipe-Return, Water |
| 30 | 110-3715 | 1 | Valve-Breather |
| 40 | 110-3714 | 1 | Cover-Breather |
| 50 | 98-9364 | 4 | Screw (With Washer) |
| 60 | 110-3716 | 1 | Shield-Breather |
| 65 | 100-2040 | 2 | Screw |
| 70 | 121-3828 | 1 | Gasket-Cover, Head |
| 80 | 108-7063 | 4 | Bolt |
| 90 | 120-3139 | 1 | Tube-Breather |
| 100 | 110-3712 | 2 | Clamp-Hose |
| 120 | 107-9075 | 1 | Plug-Filler, Oil |
| 130 | 99-3446 | 1 | O-Ring |

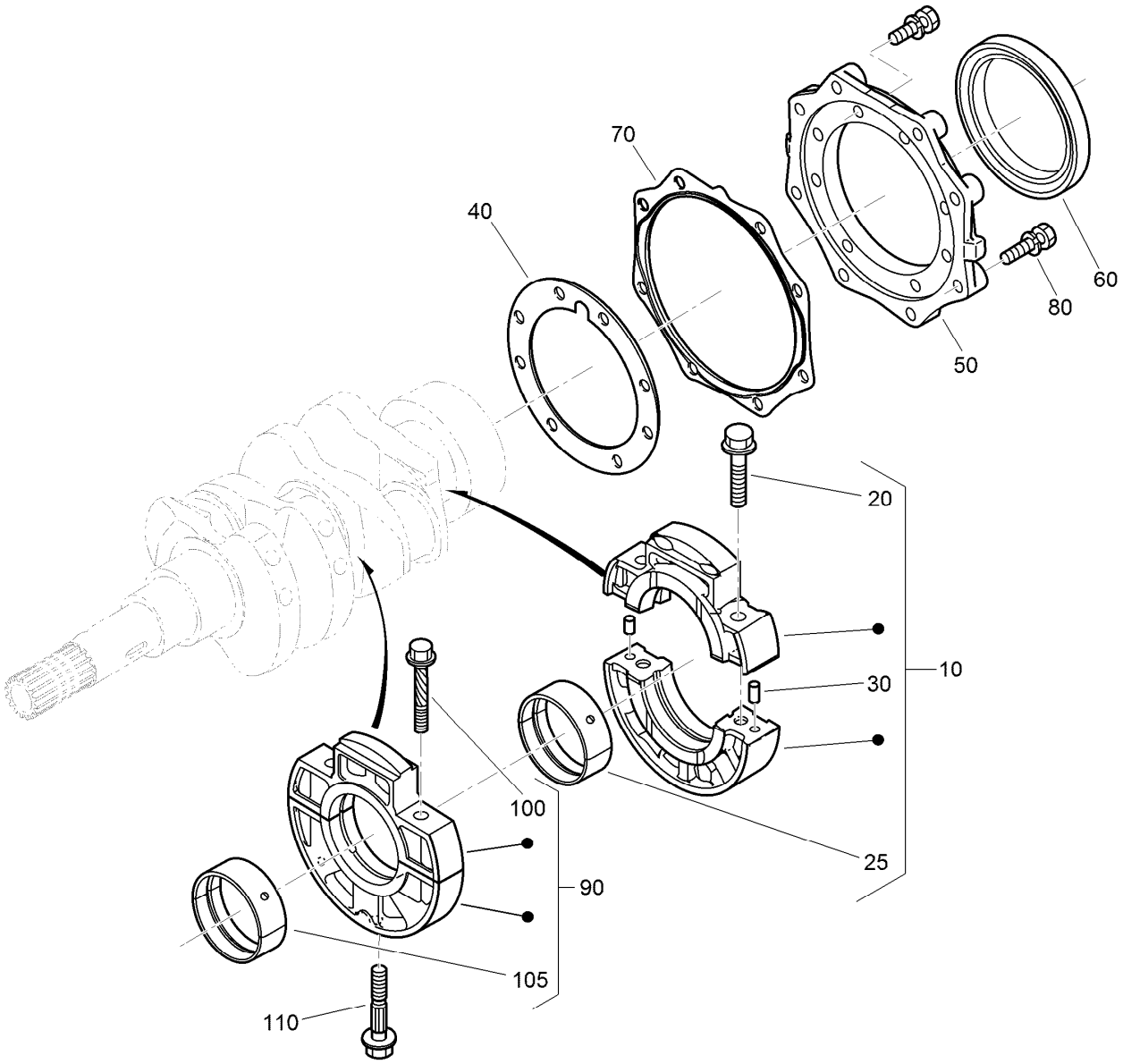


# Main Bearing Case Assembly

| Ref. | Part Number | Qty. | Description |
|---|---|---|---|
| 10 | 125-9064 | 1 | Wheel Bearing Case ASM |
| 20 | 125-9065 | 2 | Bolt-Flange |
| 25 | 125-9066 | 1 | Crankshaft Metal ASM (STD) |
| 25 | 125-9067 | 1 | Crankshaft Metal ASM (-0.20Mm) |
| 25 | 125-9068 | 1 | Crankshaft Metal ASM (-0.40Mm) |
| 30 | 125-9082 | 2 | Pin-Straight |
| 40 | 100-1873 | 1 | Gasket-Case, Bearing |
| 50 | 112-8334 | 1 | Cover-Case, Bearing |
| 60 | 110-3724 | 1 | Seal-Oil |

| Ref. | Part Number | Qty. | Description |
|---|---|---|---|
| 70 | 100-1876 | 1 | Gasket-Cover, Case |
| 80 | 100-1750 | 16 | Bolt |
| 90 | 110-3725 | 1 | Main Bearing Case ASM |
| 100 | 110-3723 | 2 | Bolt-Case, Bearing |
| 105 | 110-3741 | 1 | Crankshaft Metal ASM (STD) |
| 105 | 125-9083 | 1 | Crankshaft Metal ASM (-0.20Mm) |
| 105 | 110-3743 | 1 | Crankshaft Metal ASM (-0.40Mm) |
| 110 | 100-1874 | 1 | Bolt-Case, Bearing |

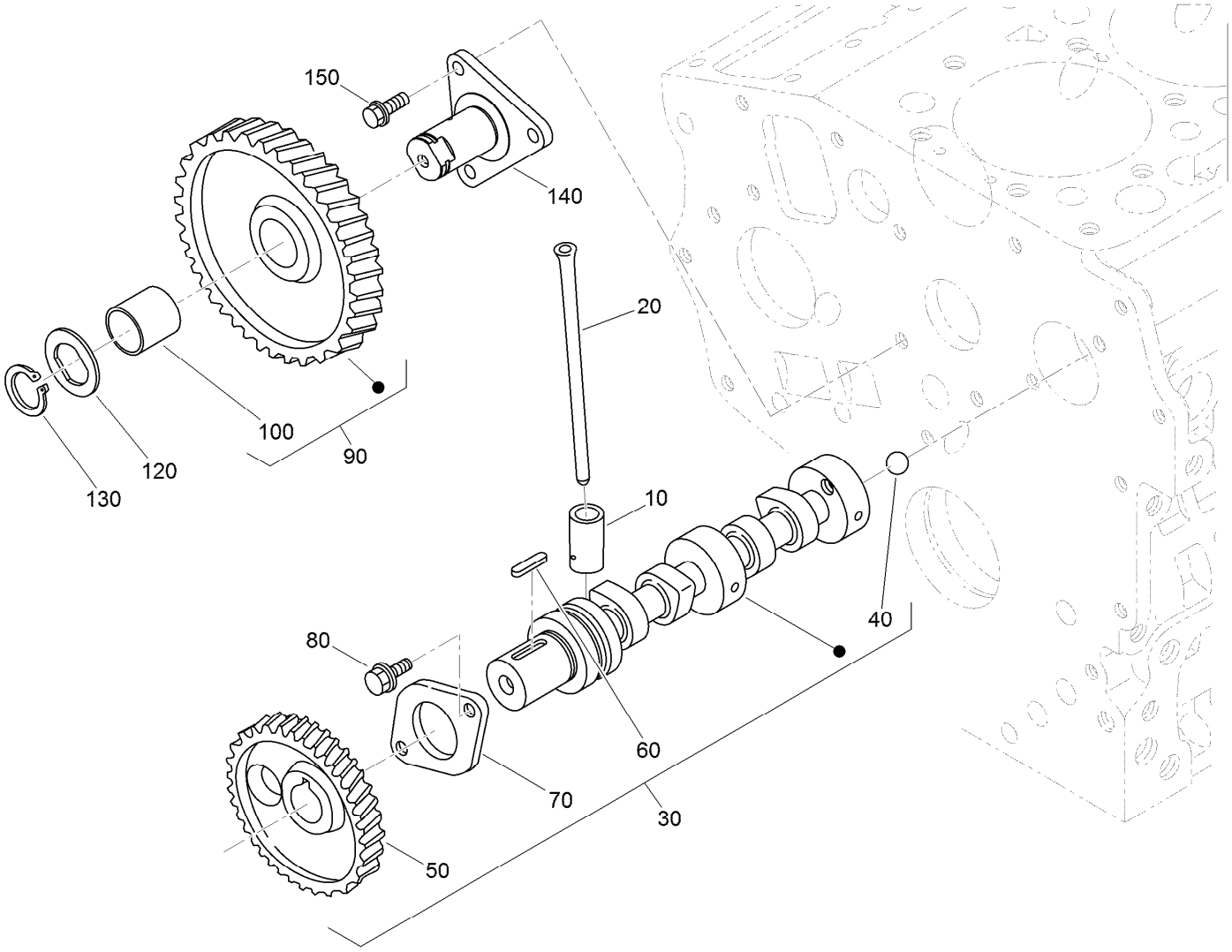


# Camshaft and Idle Gear Shaft Assembly

| *Ref.* | *Part Number* | *Qty.* | *Description* |
|---|---|---|---|
| 10 | 110-3727 | 4 | Tappet |
| 20 | 100-1989 | 4 | Rod-Push |
| 30 | 121-3845 | 1 | Camshaft ASM |
| 40 | 110-3729 | 1 | Ball |
| 50 | 130-1534 | 1 | Gear-Cam |
| 60 | 98-9378 | 1 | Key-Feather |
| 70 | 100-1887 | 1 | Stopper-Camshaft |
| 80 | 98-9350 | 2 | Bolt |
| 90 | 121-2421 | 1 | Idle Gear ASM |
| 100 | 121-2422 | 1 | Bushing |
| 120 | 100-1970 | 1 | Collar-Gear, Idle |
| 130 | 100-1969 | 1 | Ring-Snap |
| 140 | 100-1967 | 1 | Shaft-Gear, Idle |
| 150 | 100-1774 | 3 | Bolt-Flange |

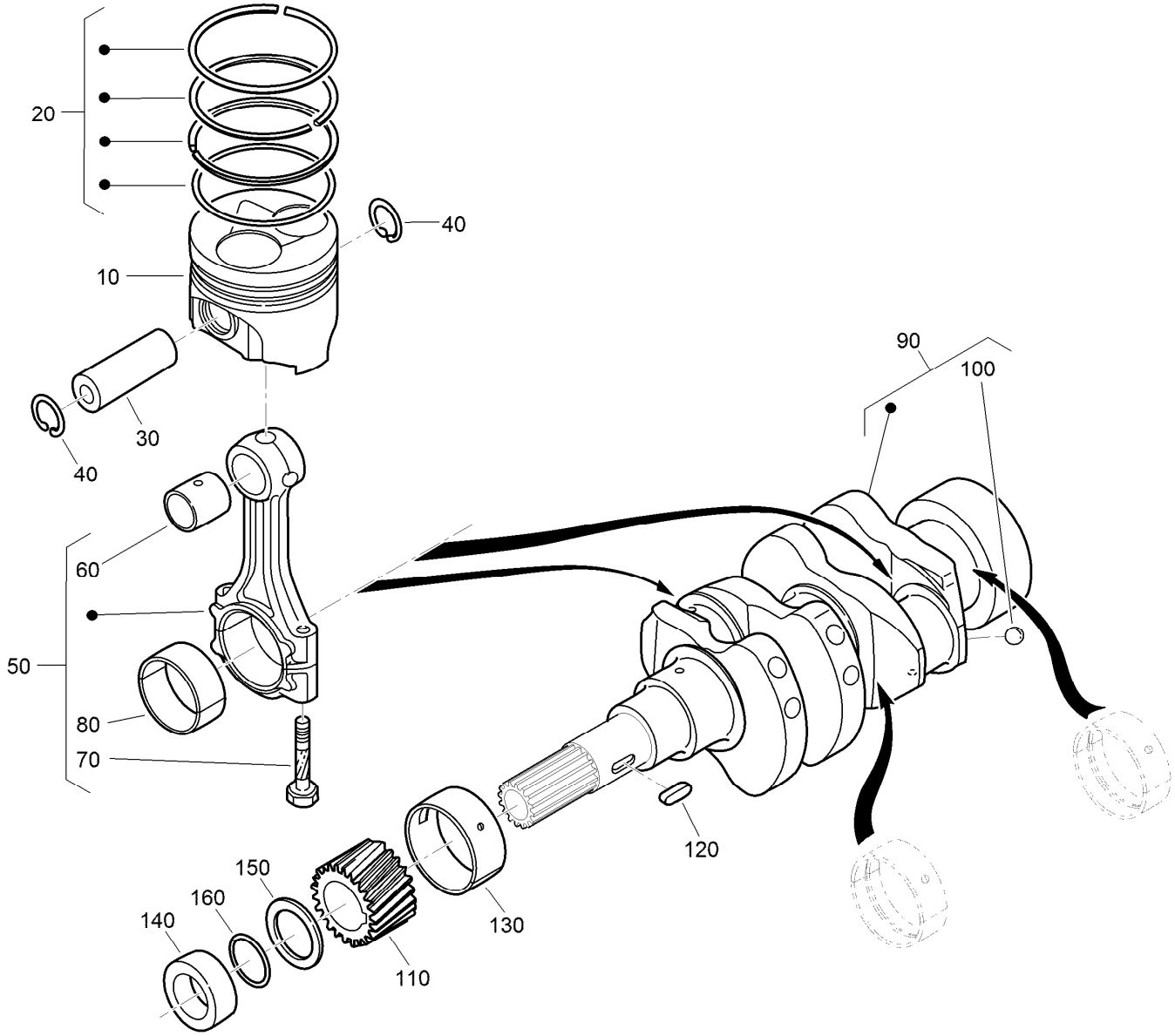


# Piston and Crankshaft Assembly

| Ref. | Part Number | Qty. | Description |
|---|---|---|---|
| 10 | 130-1518 | 2 | Piston |
| 10 | 130-1520 | 2 | Piston |
| 20 | 130-1516 | 2 | Piston Ring ASM |
| 20 | 130-1517 | 2 | Piston Ring ASM |
| 30 | 110-3734 | 2 | Pin-Piston |
| 40 | 100-1835 | 4 | Circlip-Internal |
| 50 | 125-9070 | 2 | Connecting Rod ASM |
| 60 | 110-3736 | 2 | Bushing-Pin, Piston |
| 70 | 100-1999 | 4 | Bolt-Rod, Connecting |
| 80 | 100-2000 | 2 | Metal-Crankpin (STD) |
| 80 | 121-3849 | 2 | Metal-Crankpin (-.20Mm) |

| Ref. | Part Number | Qty. | Description |
|---|---|---|---|
| 80 | 121-2420 | 2 | Metal-Crankpin (-.40Mm) |
| 90 | 121-3829 | 1 | Crankshaft ASM |
| 100 | 100-1791 | 2 | Ball |
| 110 | 100-1891 | 1 | Gear-Crankshaft |
| 120 | 100-1752 | 1 | Key-Feather |
| 130 | 110-3738 | 1 | Metal-Crankshaft (STD) |
| 130 | 121-2424 | 1 | Metal-Crankshaft (-.20Mm) |
| 130 | 121-2425 | 1 | Metal-Crankshaft (-.40Mm) |
| 140 | 100-1890 | 1 | Collar-Crankshaft |
| 150 | 100-1974 | 1 | Slinger-Oil |
| 160 | 100-2209 | 1 | O-Ring |

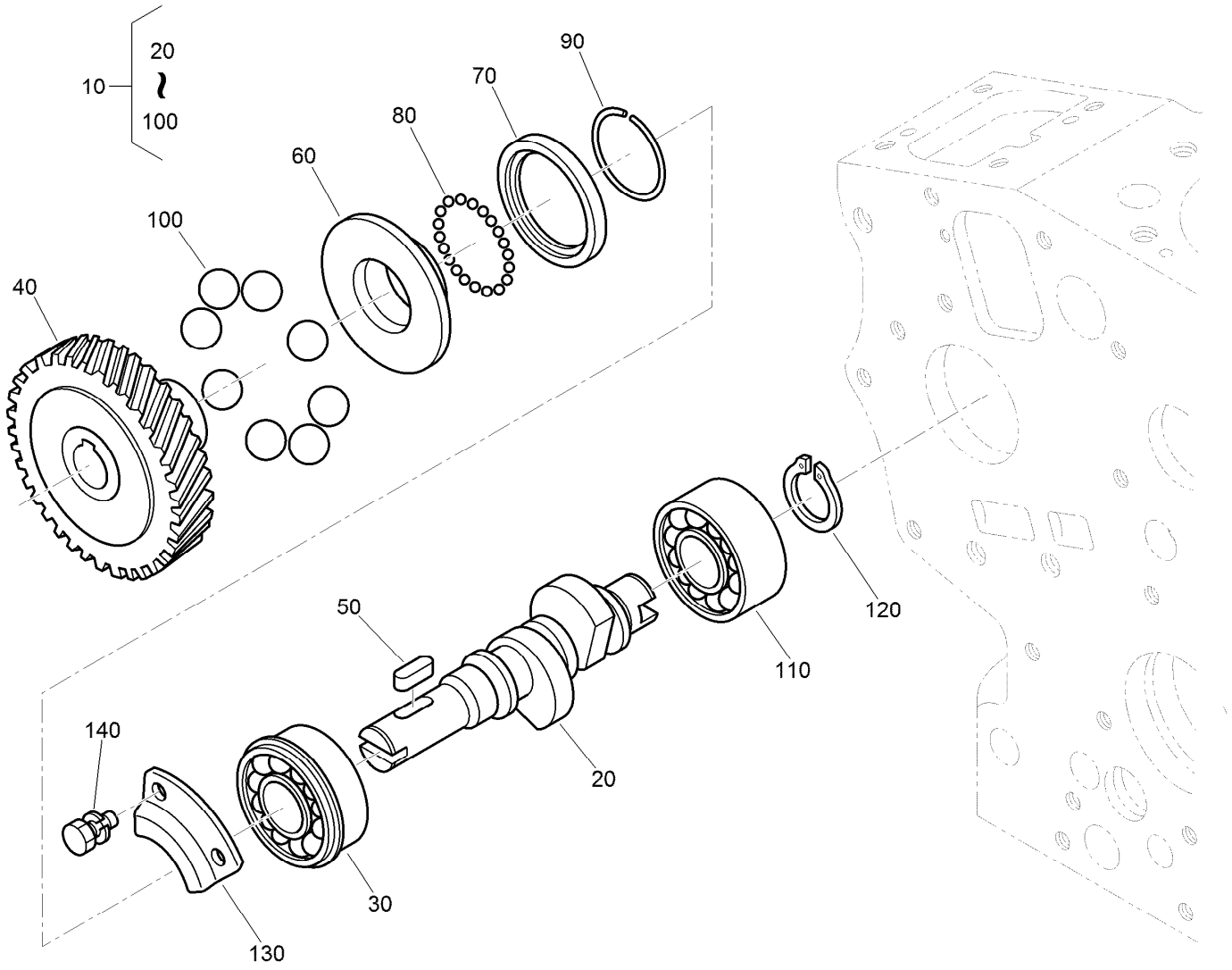


# Fuel Camshaft Assembly

| Ref. | Part Number | Qty. | Description |
|---|---|---|---|
| 10 | 130-1515 | 1 | Fuel Camshaft ASM |
| 20 | 121-3802 | 1 | Camshaft-Fuel |
| 30 | 100-1795 | 1 | Bearing-Ball |
| 40 | 130-1521 | 1 | Pump-Gear, Injection |
| 50 | 100-1752 | 1 | Key-Feather |
| 60 | 112-8336 | 1 | Sleeve-Governor |
| 70 | 100-1904 | 1 | Case-Ball, Governor |
| 80 | 100-1790 | 32 | Ball |
| 90 | 100-1843 | 1 | Circ-Clip |
| 100 | 100-1793 | 8 | Ball |
| 110 | 110-3757 | 1 | Bearing-Ball |
| 120 | 100-1784 | 1 | Circ-Clip, External |
| 130 | 100-1888 | 1 | Stopper-Fuel, Camshaft |
| 140 | 98-9350 | 2 | Bolt |

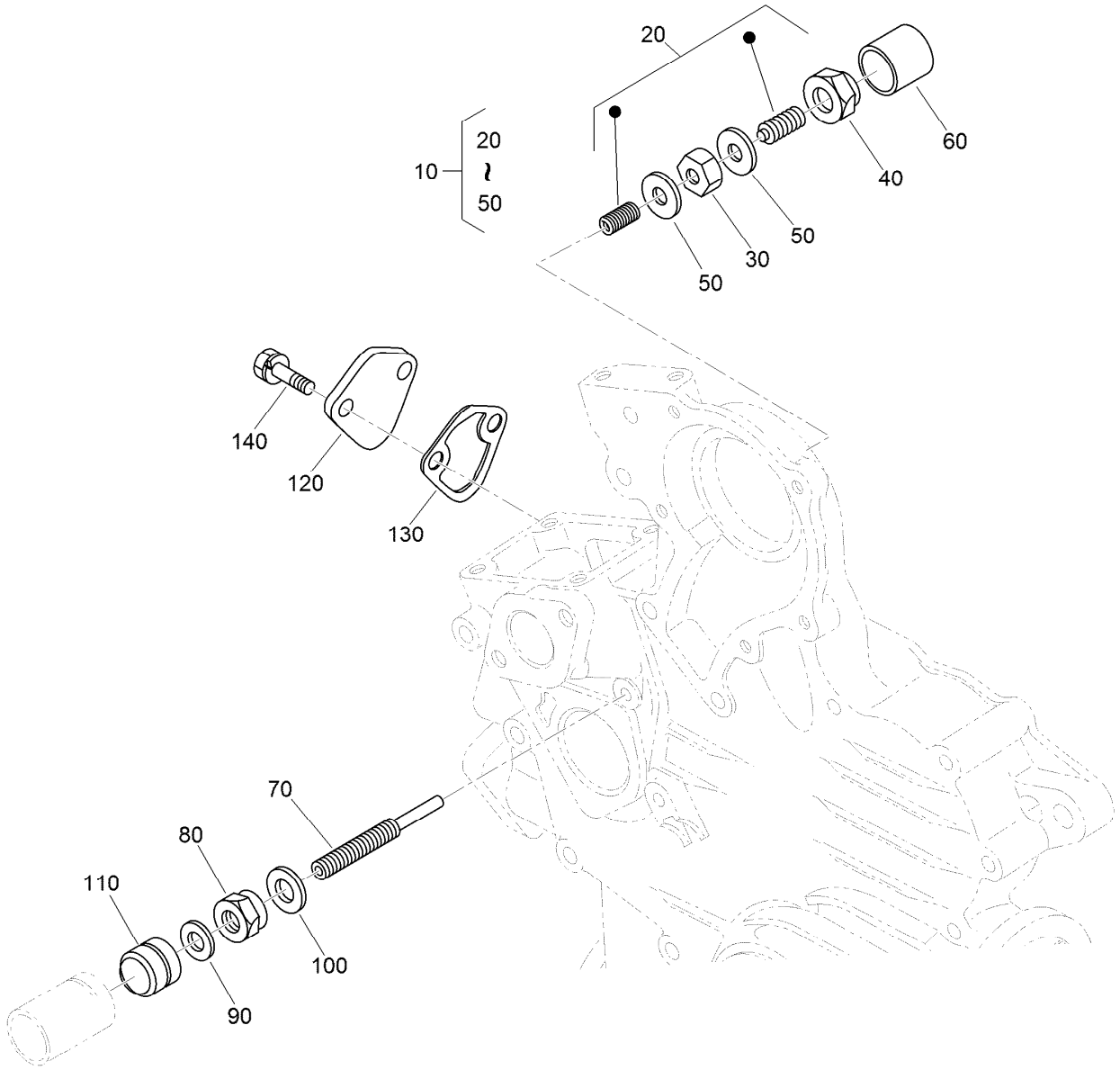


# Idle Apparatus and Fuel Pump Cover Assembly

| *Ref.* | *Part Number* | *Qty.* | *Description* |
|---|---|---|---|
| 10 | 100-1898 | 1 | Idle Apparatus ASM |
| 20 | 100-1899 | 1 | Adjusting Bolt ASM |
| 30 | 100-1846 | 1 | Nut |
| 40 | 100-1901 | 1 | Nut-Cap |
| 50 | 98-7428 | 2 | Gasket |
| 60 | 100-1902 | 1 | Cap |
| 70 | 110-3758 | 1 | Bolt-Adjusting |
| 80 | 100-2175 | 1 | Nut-Lock |
| 90 | 98-7654 | 1 | Gasket |
| 100 | 107-9081 | 1 | Gasket |
| 110 | 99-8387 | 1 | Nut-Cap |
| 120 | 99-3514 | 1 | Cover |
| 130 | 98-9636 | 1 | Gasket-Pump, Fuel |
| 140 | 98-7692 | 2 | Bolt |

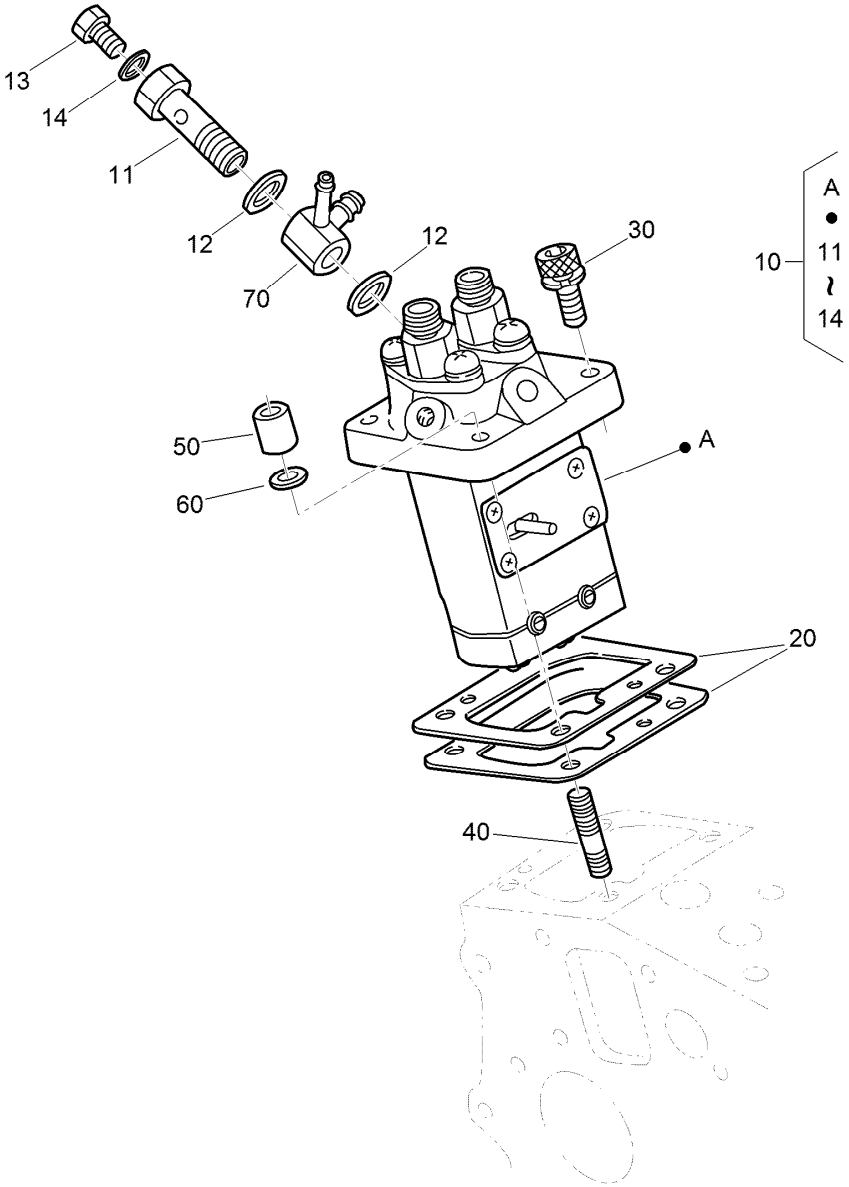


# Injection Pump Assembly

| Ref. | Part Number | Qty. | Description |
|---|---|---|---|
| 10 | 130-1366 | 1 | Injection Pump ASM |
| 11 | 100-1896 | 1 | Screw-Hollow |
| 12 | 98-9445 | 2 | Gasket |
| 13 | 98-9430 | 1 | Screw |
| 14 | 98-9446 | 1 | Gasket |
| 20 | 121-3836 | 1 | Shim-Pump, Injection (0.350Mm) |
| 20 | 121-3837 | 1 | Shim-Pump, Injection (0.175Mm) |
| 20 | 121-3806 | 1 | Shim-Pump, Injection (0.200Mm) |
| 20 | 121-3807 | 1 | Shim-Pump, Injection (0.250Mm) |
| 20 | 121-3808 | 1 | Shim-Pump, Injection (0.300Mm) |
| 30 | 117-7564 | 3 | Bolt-Hex Soc HD |
| 40 | 98-9438 | 1 | Stud |
| 50 | 98-9440 | 1 | Nut-Cap |
| 60 | 98-7699 | 1 | Washer-Spring |
| 70 | 110-3764 | 1 | Joint |

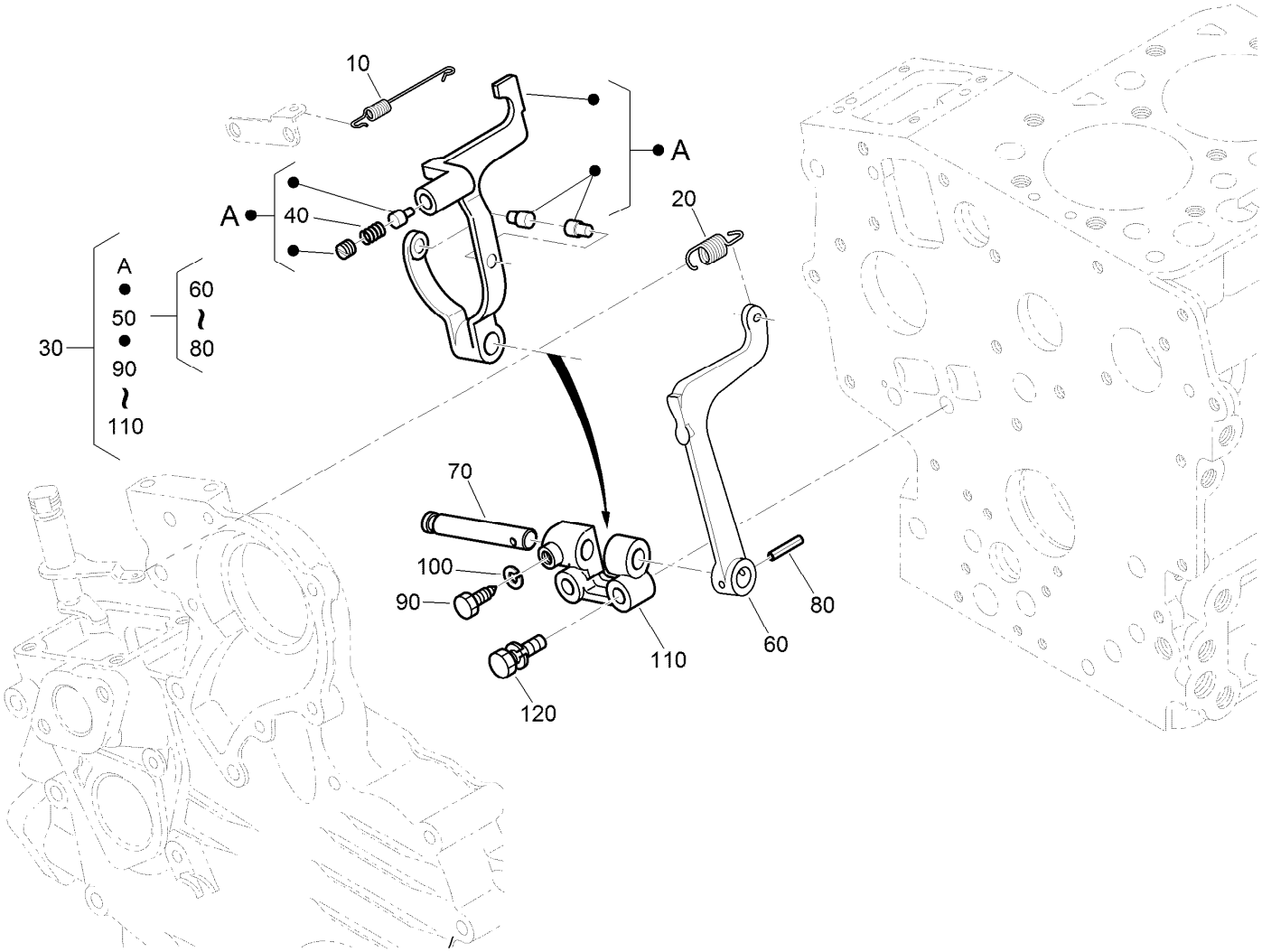


# Governor Assembly

| Ref. | Part Number | Qty. | Description |
|---|---|---|---|
| 10 | 110-3766 | 1 | Spring-Start |
| 20 | 110-3767 | 1 | Spring-Governor |
| 30 | 121-3822 | 1 | Fork Lever ASM |
| 40 | 121-3803 | 1 | Spring |
| 50 | 100-1905 | 1 | Fork Lever ASM |
| 60 | 100-1907 | 1 | Lever-Fork |
| 70 | 100-1908 | 1 | Shaft-Lever, Fork |
| 80 | 100-1751 | 1 | Pin-Spring |
| 90 | 100-1845 | 1 | Bolt |
| 100 | 127-0408 | 1 | Washer-Lock, Spring |
| 110 | 100-1909 | 1 | Holder-Lever, Fork |
| 120 | 100-1763 | 2 | Bolt |

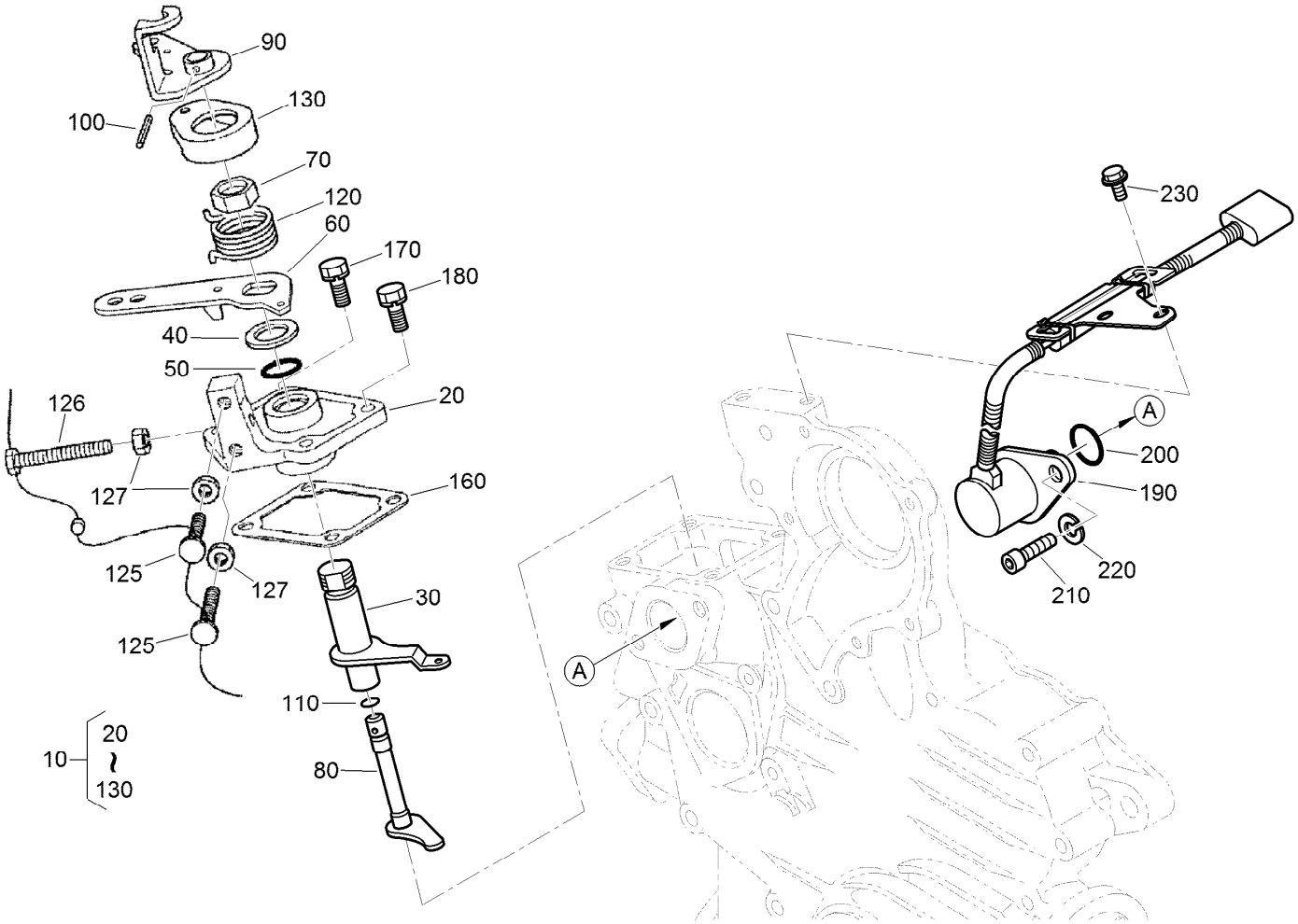


# Stop Solenoid and Speed Control Plate Assembly

| Ref. | Part Number | Qty. | Description |
|---|---|---|---|
| 10 | 110-3769 | 1 | Speed Control Plate ASM |
| 20 | 110-3770 | 1 | Plate-Control, Speed |
| 30 | 110-3771 | 1 | Lever-Governor |
| 40 | 110-3772 | 1 | Collar |
| 50 | 100-2208 | 1 | O-Ring |
| 60 | 110-3773 | 1 | Lever-Control, Speed |
| 70 | 110-3774 | 1 | Nut-Control, Speed |
| 80 | 110-3775 | 1 | Shaft-Lever |
| 90 | 110-3776 | 1 | Lever-Stop, Engine |
| 100 | 110-3777 | 1 | Pin-Spring |
| 110 | 100-2207 | 1 | O-Ring |
| 120 | 110-3778 | 1 | Spring-Return |

| Ref. | Part Number | Qty. | Description |
|---|---|---|---|
| 125 | 120-3133 | 2 | Screw-Stopper |
| 126 | 120-3134 | 1 | Bolt |
| 127 | 98-7572 | 3 | Nut |
| 130 | 110-3779 | 1 | Cap |
| 160 | 100-1962 | 1 | Gasket-Plate, Control |
| 170 | 127-0403 | 2 | Bolt-Flange |
| 180 | 112-2507 | 2 | Bolt |
| 190 | 117-2719 | 1 | Solenoid Stop ASM |
| 200 | 110-3762 | 1 | O-Ring |
| 210 | 110-3763 | 2 | Bolt-HSH |
| 220 | 98-7699 | 2 | Washer-Spring |
| 230 | 100-1774 | 2 | Bolt-Flange |

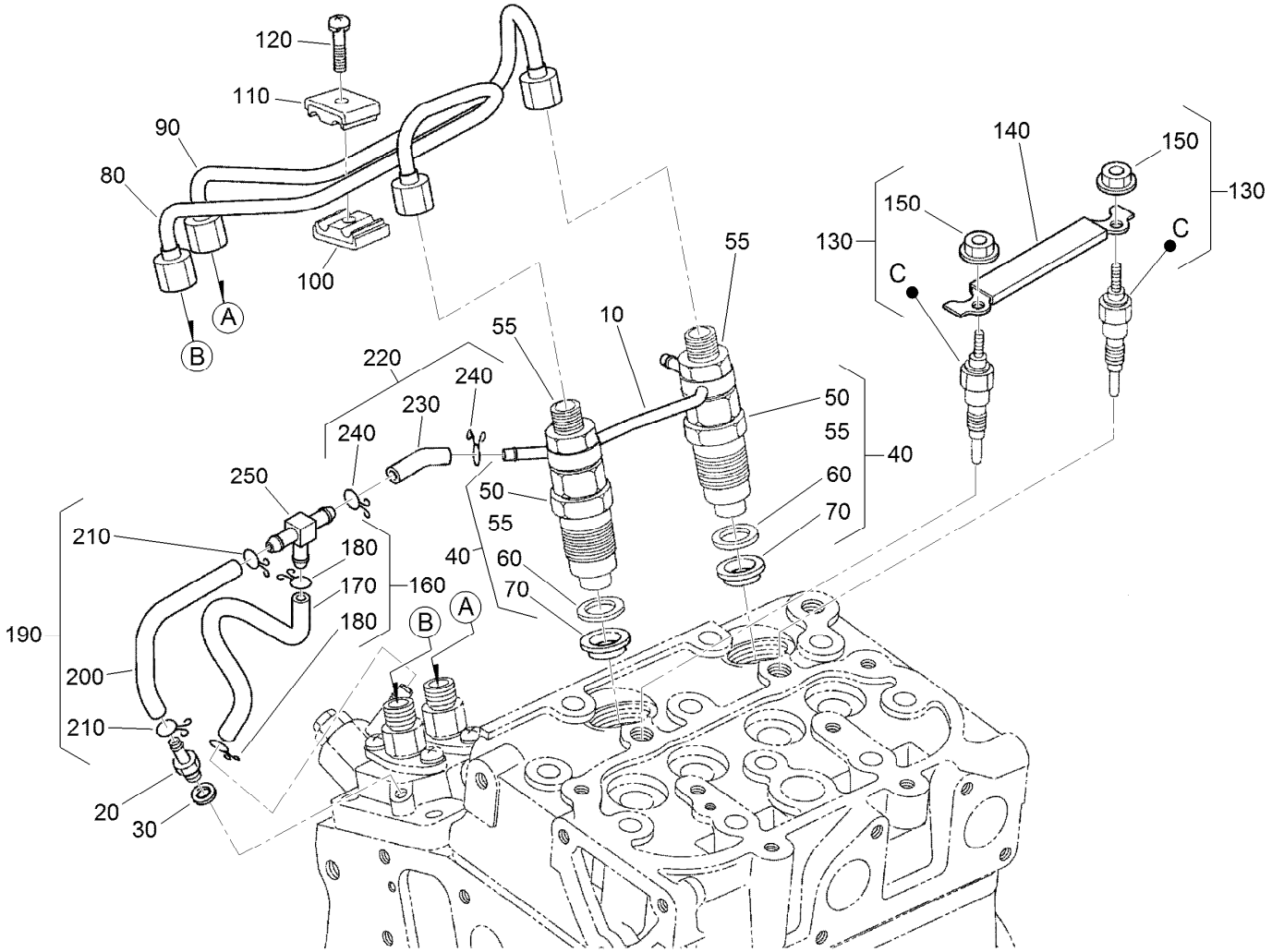


# Nozzle Holder and Glow Plug Assembly

| Ref. | Part Number | Qty. | Description |
|---|---|---|---|
| 10 | 121-3833 | 1 | Overflow Pipe ASM |
| 20 | 98-9431 | 1 | Screw-Bleeder, Air |
| 30 | 98-7654 | 1 | Gasket |
| 40 | 130-1305 | 2 | Nozzle Holder Kit |
| 50 | 130-1303 | 2 | Nozzle Holder ASM |
| 55 | 130-1442 | 2 | Nut |
| 60 | 98-7676 | 2 | Gasket |
| 70 | 98-7677 | 2 | Seal-Heat |
| 80 | 130-1522 | 1 | Pipe-Injection |
| 90 | 130-1523 | 1 | Pipe-Injection |
| 100 | 98-7682 | 1 | Clamp-Pipe |
| 110 | 98-7683 | 1 | Clamp-Pipe |
| 120 | 98-7684 | 1 | Screw (W/Washer) |

| Ref. | Part Number | Qty. | Description |
|---|---|---|---|
| 130 | 130-1411 | 2 | Plug-Glow |
| 140 | 121-3834 | 1 | Cord-Plug, Glow |
| 150 | 99-8377 | 2 | Nut-Flange |
| 160 | 110-3787 | 1 | Fuel Tube ASM |
| 170 | 110-3788 | 1 | Tube-Fuel |
| 180 | 98-7671 | 2 | Clip-Pipe |
| 190 | 110-3785 | 1 | Fuel Tube ASM |
| 200 | 110-3786 | 1 | Tube-Fuel |
| 210 | 98-7671 | 2 | Clip-Pipe |
| 220 | 110-3790 | 1 | Fuel Tube ASM |
| 230 | 110-3791 | 1 | Tube-Fuel |
| 240 | 98-7671 | 2 | Clip-Pipe |
| 250 | 112-8338 | 1 | Pipe-Joint, T |

# Nozzle Holder Assembly

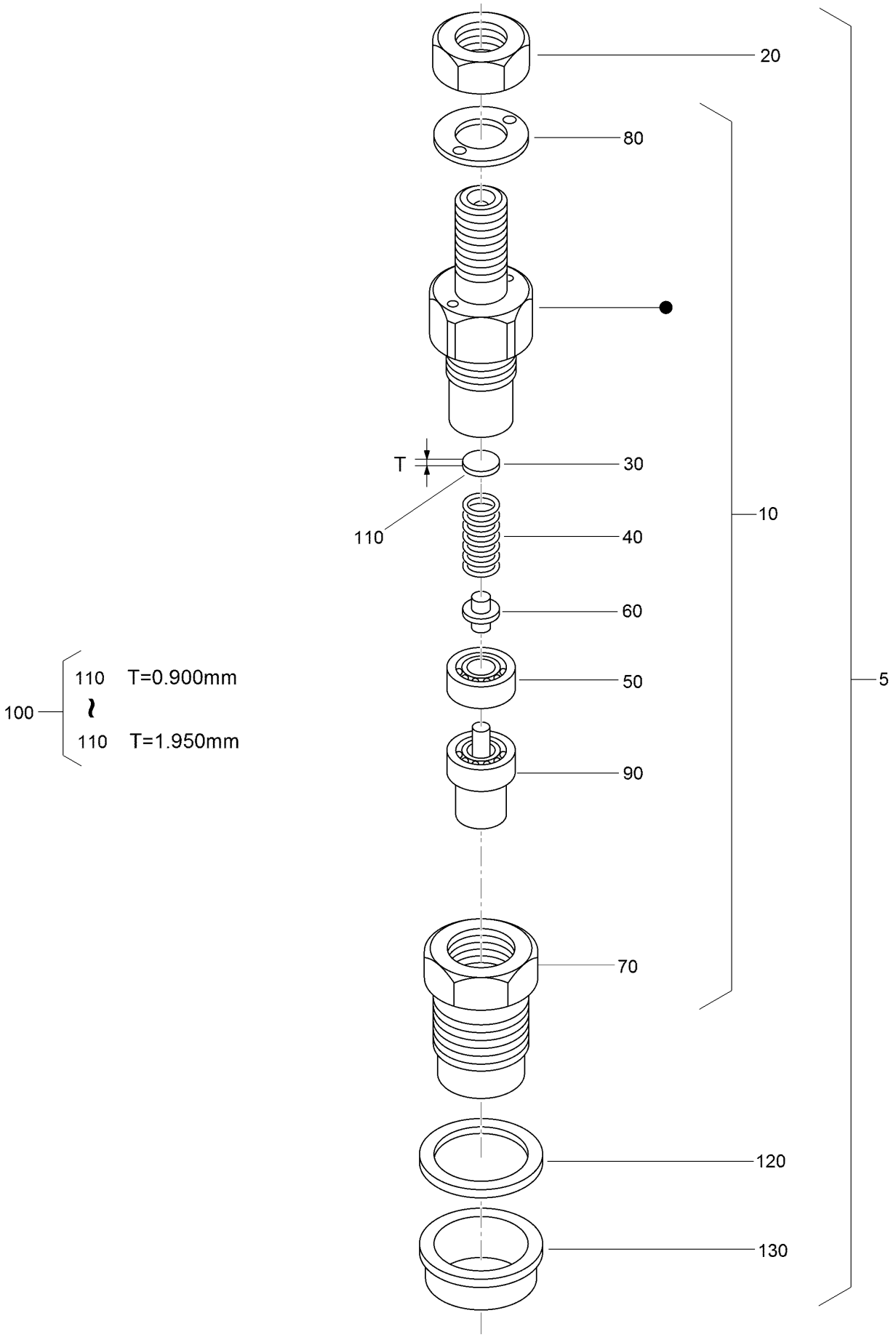

# Nozzle Holder Assembly (continued)

| Ref. | Part Number | Qty. | Description |
|---|---|---|---|
| 5 | 130-1305 | 2 | Nozzle Holder Kit |
| 10 | 130-1303 | 2 | Nozzle Holder ASM |
| 20 | 130-1442 | 2 | Nut |
| 30 | 99-8302 | 2 | Washer-Adjusting |
| 40 | 99-8303 | 2 | Spring-Nozzle |
| 50 | 99-8304 | 2 | Spacer-Distance |
| 60 | 99-8305 | 2 | Rod-Push |
| 70 | 130-1304 | 2 | Nut-Nozzle |
| 80 | 99-8307 | 2 | Washer-Plain |
| 90 | 130-1497 | 2 | Nozzle-Piece |
| 100 | 98-9448 | 2 | Adjusting Washer ASM |
| 110 | 98-7642 | 2 | Washer-Adjusting (0.900Mm) |
| 110 | 98-7841 | 2 | Washer-Adjusting (0.925Mm) |
| 110 | 98-7842 | 2 | Washer-Adjusting (0.950Mm) |
| 110 | 98-7843 | 2 | Washer-Adjusting (0.975Mm) |
| 110 | 98-7844 | 2 | Washer-Adjusting (1.000Mm) |
| 110 | 98-7845 | 2 | Washer-Adjusting (1.025Mm) |
| 110 | 98-7846 | 2 | Washer-Adjusting (1.050Mm) |
| 110 | 98-7847 | 2 | Washer-Adjusting (1.075Mm) |
| 110 | 98-7848 | 2 | Washer-Adjusting (1.100Mm) |
| 110 | 98-7849 | 2 | Washer-Adjusting (1.125Mm) |
| 110 | 98-7850 | 2 | Washer-Adjusting (1.150Mm) |
| 110 | 98-7851 | 2 | Washer-Adjusting (1.175Mm) |
| 110 | 98-7852 | 2 | Washer-Adjusting (1.200Mm) |
| 110 | 98-7853 | 2 | Washer-Adjusting (1.225Mm) |
| 110 | 98-7854 | 2 | Washer-Adjusting (1.250Mm) |
| 110 | 98-7855 | 2 | Washer-Adjusting (1.275Mm) |
| 110 | 98-7856 | 2 | Washer-Adjusting 1.300Mm) |
| 110 | 98-7857 | 2 | Washer-Adjusting (1.325Mm) |
| 110 | 98-7858 | 2 | Washer-Adjusting (1.350Mm) |
| 110 | 98-7859 | 2 | Washer-Adjusting (1.375Mm) |
| 110 | 98-7860 | 2 | Washer-Adjusting (1.400Mm) |
| 110 | 98-7861 | 2 | Washer-Adjusting (1.425Mm) |
| 110 | 98-7862 | 2 | Washer-Adjusting (1.450Mm) |
| 110 | 98-7863 | 2 | Washer-Adjusting (1.475Mm) |
| 110 | 98-7864 | 2 | Washer-Adjusting (1.500Mm) |
| 110 | 98-7865 | 2 | Washer-Adjusting (1.525Mm) |
| 110 | 98-7866 | 2 | Washer-Adjusting (1.550Mm) |
| 110 | 98-7867 | 2 | Washer-Adjusting (1.575Mm) |
| 110 | 98-7868 | 2 | Washer-Adjusting (1.600Mm) |
| 110 | 98-7869 | 2 | Washer-Adjusting (1.625Mm) |
| 110 | 98-7870 | 2 | Washer-Adjusting (1.650Mm) |
| 110 | 98-7871 | 2 | Washer-Adjusting (1.675Mm) |
| 110 | 98-7872 | 2 | Washer-Adjusting (1.700Mm) |
| 110 | 98-7873 | 2 | Washer-Adjusting (1.725Mm) |
| 110 | 98-7874 | 2 | Washer-Adjusting (1.750Mm) |
| 110 | 98-7875 | 2 | Washer-Adjusting (1.775Mm) |
| 110 | 98-7876 | 2 | Washer-Adjusting (1.800Mm) |
| 110 | 98-7877 | 2 | Washer-Adjusting (1.825Mm) |
| 110 | 98-7878 | 2 | Washer-Adjusting (1.850Mm) |
| 110 | 98-7879 | 2 | Washer-Adjusting (1.875Mm) |
| 110 | 98-7880 | 2 | Washer-Adjusting (1.900Mm) |
| 110 | 98-7881 | 2 | Washer-Adjusting (1.925Mm) |
| 110 | 98-7882 | 2 | Washer-Adjusting (1.950Mm) |
| 120 | 98-7676 | 2 | Gasket |
| 130 | 98-7677 | 2 | Seal-Heat |

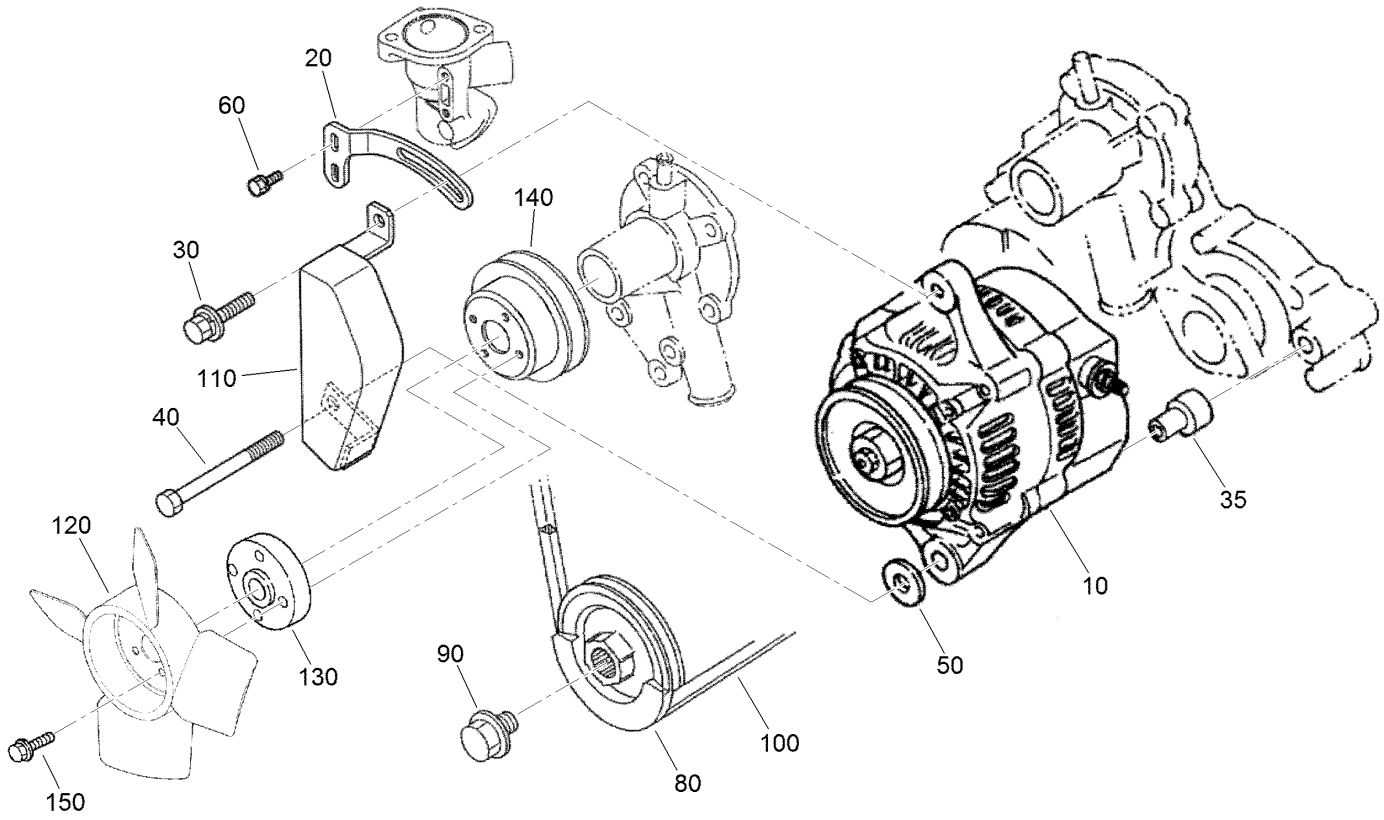


# Alternator, Pulley and Fan Assembly

| Ref. | Part Number | Qty. | Description |
|---|---|---|---|
| 10 | 121-3811 | 1 | Alternator ASM |
| 20 | 110-3792 | 1 | Stay-Alternator |
| 30 | 121-3800 | 1 | Bolt-Sems |
| 35 | 110-3794 | 1 | Collar |
| 40 | 110-3793 | 1 | Bolt |
| 50 | 120-5832 | 1 | Washer-Plain |
| 60 | 98-7692 | 2 | Bolt |
| 80 | 121-3809 | 1 | Regulator ASM |
| 90 | 100-1978 | 1 | Bolt |
| 100 | 112-2511 | 1 | Belt |
| 110 | 110-3797 | 1 | Cover |
| 120 | 121-3804 | 1 | Fan |
| 130 | 108-2872 | 1 | Collar-Fan |
| 140 | 100-1921 | 1 | Pulley-Fan |
| 150 | 108-2873 | 4 | Bolt-Flange |

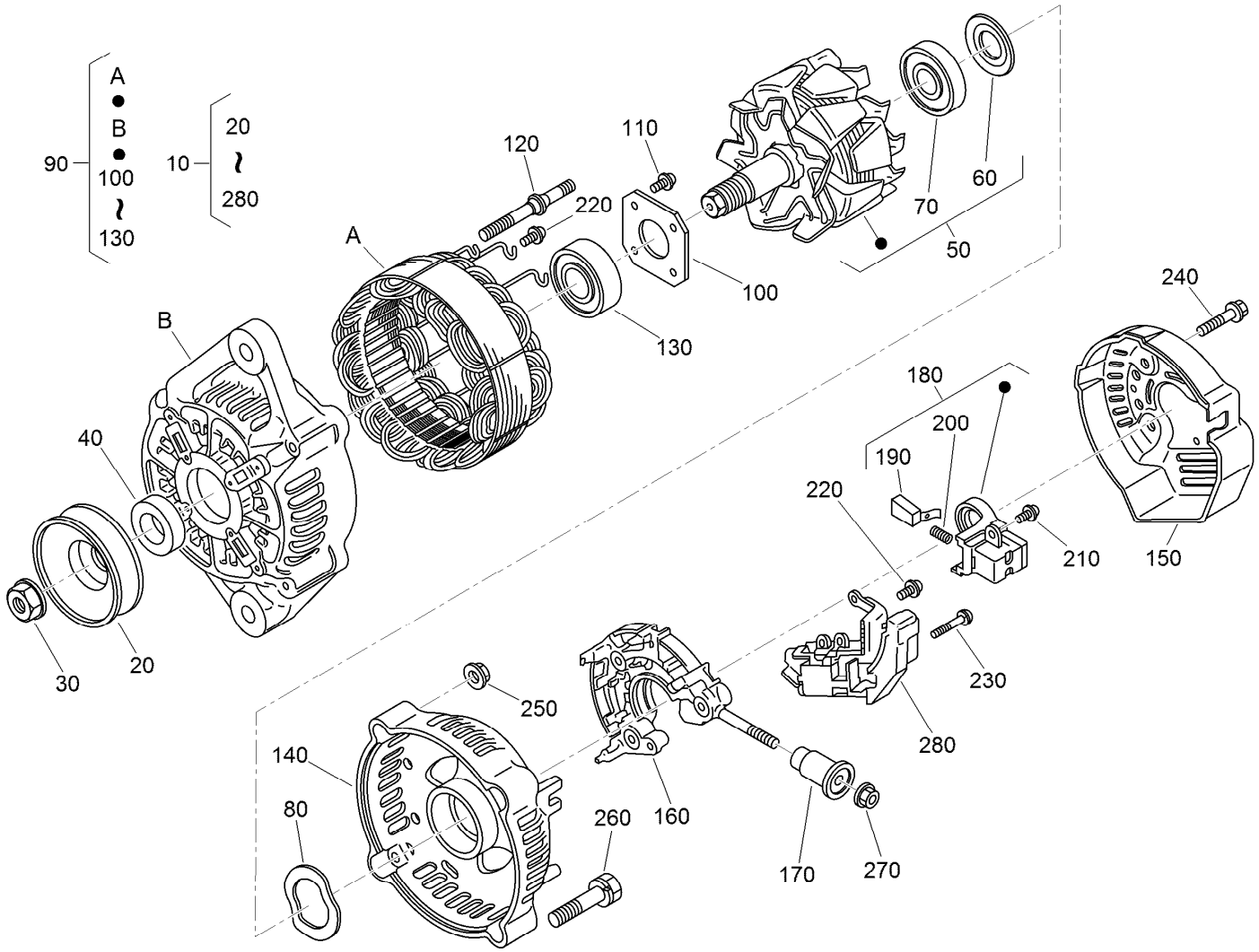


# Alternator Components Assembly

| Ref. | Part Number | Qty. | Description |
|---|---|---|---|
| 10 | 121-3811 | 1 | Alternator ASM |
| 20 | 98-9453 | 1 | Pulley-Dynamo |
| 30 | 98-7708 | 1 | Nut |
| 40 | 98-7709 | 1 | Collar |
| 50 | 107-0136 | 1 | Rotor ASM |
| 60 | 98-7711 | 1 | Cover-Bearing |
| 70 | 107-0138 | 1 | Bearing-Ball |
| 80 | 98-7713 | 1 | Washer-Thrust |
| 90 | 107-0139 | 1 | Drive End Frame ASM |
| 100 | 98-7715 | 1 | Plate-Retainer |
| 110 | 98-7716 | 4 | Screw-Head, Round |
| 120 | 98-7717 | 2 | Bolt-Through |
| 130 | 107-0137 | 1 | Bearing-Ball |
| 140 | 121-3812 | 1 | Frame-End |

| Ref. | Part Number | Qty. | Description |
|---|---|---|---|
| 150 | 121-3813 | 1 | Cover-End |
| 160 | 121-3805 | 1 | Rectifier ASM |
| 170 | 117-0321 | 1 | Insulation-Brush |
| 180 | 107-0141 | 1 | Brush Holder ASM |
| 190 | 98-7724 | 2 | Brush |
| 200 | 98-7725 | 2 | Spring-Brush |
| 210 | 98-7726 | 2 | Screw-Head, Round |
| 220 | 98-7727 | 6 | Screw-Head, Round |
| 230 | 98-7728 | 1 | Screw-Head, Round |
| 240 | 98-7729 | 3 | Bolt |
| 250 | 98-7730 | 2 | Nut |
| 260 | 98-7731 | 2 | Bolt |
| 270 | 98-7732 | 1 | Nut |
| 280 | 121-3809 | 1 | Regulator ASM |

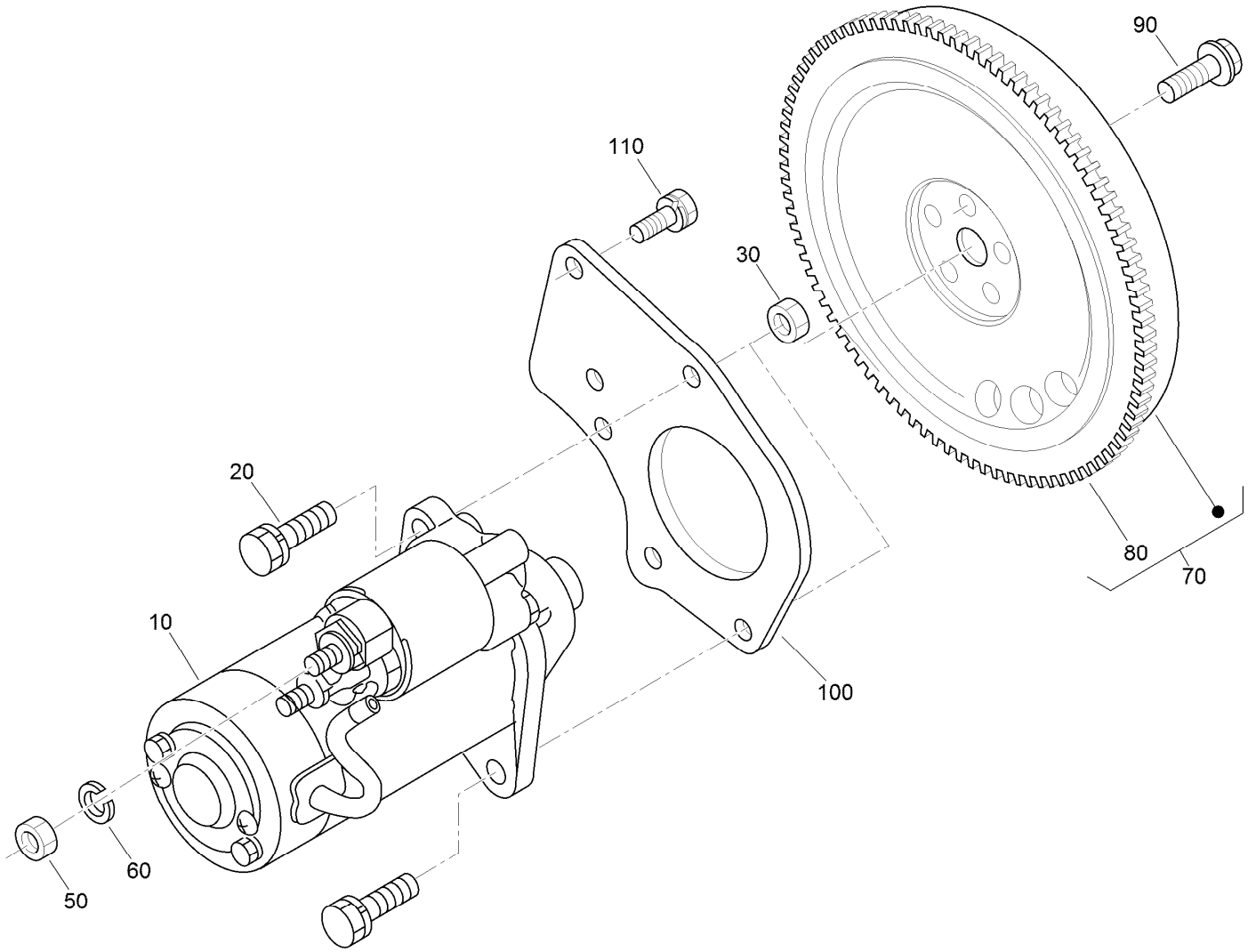


# Starter and Flywheel Assembly

| *Ref.* | *Part Number* | *Qty.* | *Description* |
|---|---|---|---|
| 10 | 121-3816 | 1 | Starter ASM |
| 20 | 98-7697 | 2 | Bolt |
| 30 | 98-7534 | 2 | Nut |
| 50 | 98-7534 | 1 | Nut |
| 60 | 105-2893 | 1 | Washer-Spring |
| 70 | 130-1296 | 1 | Flywheel ASM |
| 80 | 127-1604 | 1 | Gear-Ring |
| 90 | 100-1930 | 5 | Bolt-Flywheel |
| 100 | 117-0323 | 1 | Plate-End, Rear |
| 110 | 110-3754 | 3 | Bolt |

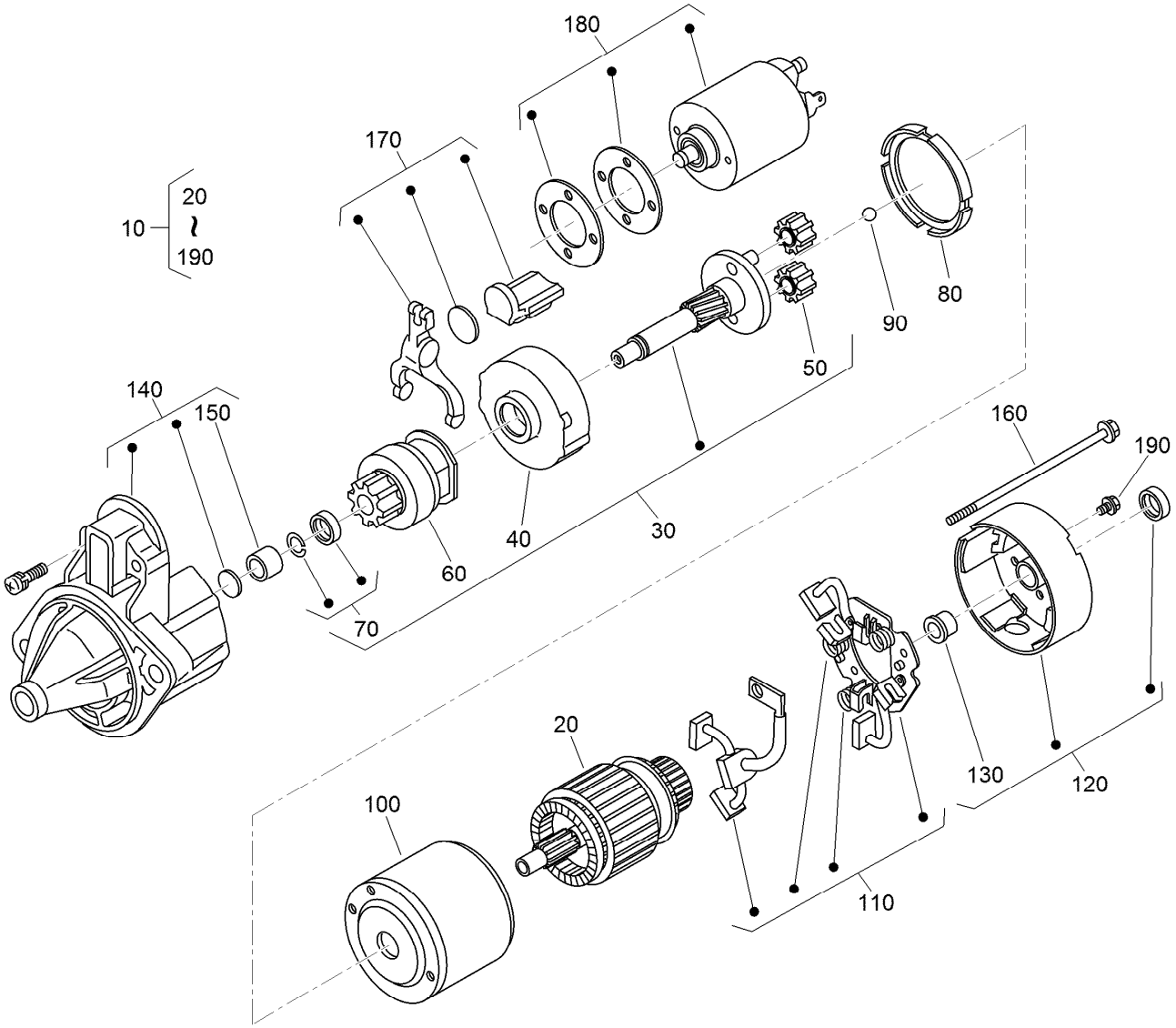


# Starter Component Assembly

| Ref. | Part Number | Qty. | Description |
|---|---|---|---|
| 10 | 121-3816 | 1 | Starter ASM |
| 20 | 121-3817 | 1 | Armature |
| 30 | 110-3802 | 1 | Shaft ASM |
| 40 | 120-3142 | 1 | Gear-Internal |
| 50 | 110-3804 | 3 | Gear-Planetary |
| 60 | 110-3805 | 1 | Clutch-Running, Over |
| 70 | 110-3806 | 1 | Stopper |
| 80 | 120-3143 | 1 | Gasket |
| 90 | 110-3808 | 1 | Ball |
| 100 | 130-1298 | 1 | Yoke |

| Ref. | Part Number | Qty. | Description |
|---|---|---|---|
| 110 | 110-3810 | 1 | Brush Holder ASM |
| 120 | 110-3811 | 1 | Rear Bracket ASM |
| 130 | 110-3812 | 1 | Bushing |
| 140 | 110-3813 | 1 | Front Bracket ASM |
| 150 | 110-3814 | 1 | Bushing |
| 160 | 121-3846 | 2 | Bolt |
| 170 | 110-3816 | 1 | Fork Lever ASM |
| 180 | 125-9099 | 1 | Switch-Magnetic |
| 190 | 110-3818 | 4 | Screws (Set Of 4) |

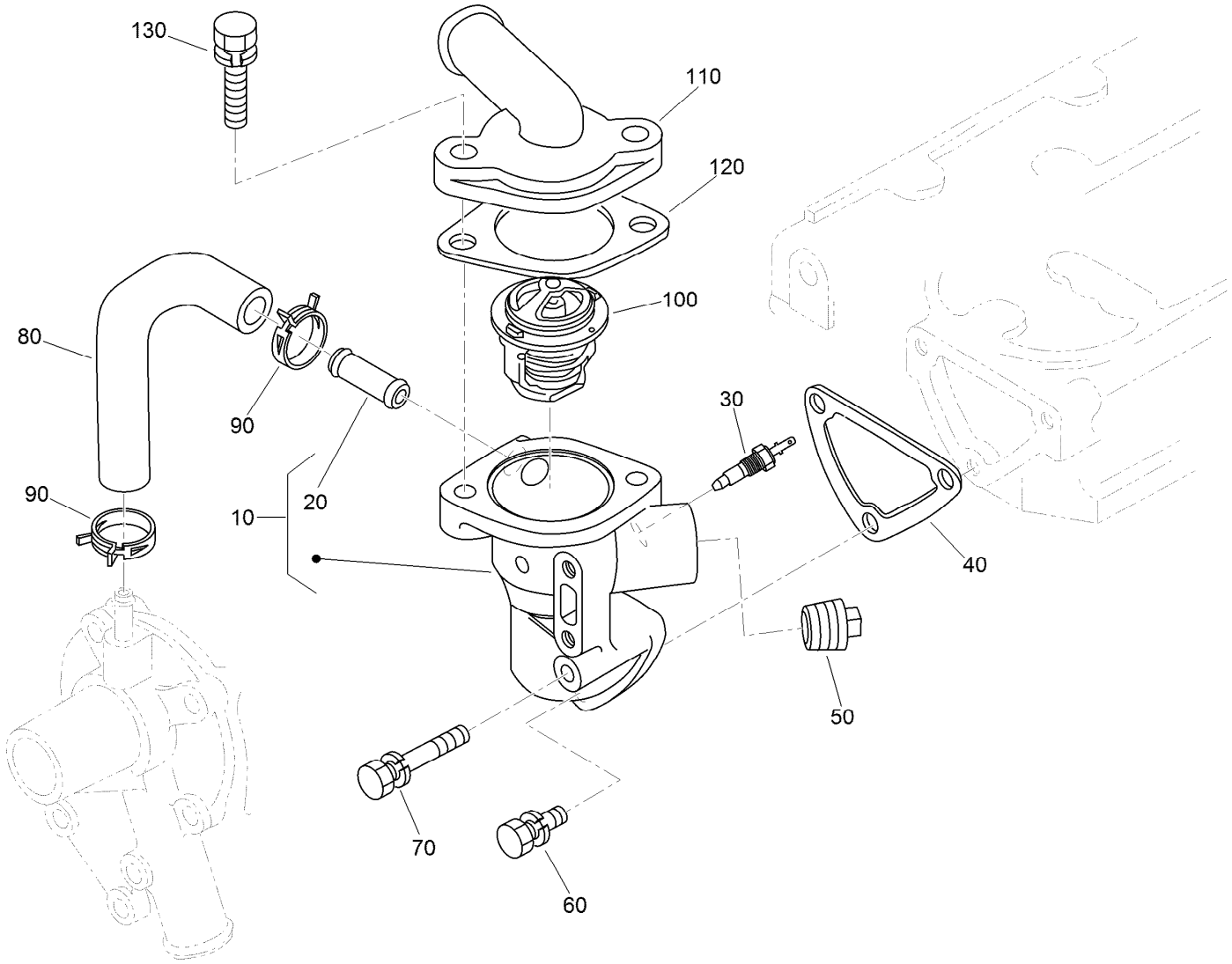


# Water Flange and Thermostat Assembly

| Ref. | Part Number | Qty. | Description |
|---|---|---|---|
| 10 | 110-3819 | 1 | Water Flange ASM |
| 20 | 98-9580 | 1 | Pipe-Return, Water |
| 30 | 99-3582 | 1 | Thermoswitch |
| 40 | 110-3820 | 1 | Gasket-Flange, Water |
| 50 | 110-3821 | 1 | Plug |
| 60 | 98-7692 | 2 | Bolt |
| 70 | 125-9063 | 1 | Bolt-Sems |
| 80 | 110-3822 | 1 | Pipe-Return, Water |
| 90 | 125-9078 | 2 | Clamp-Hose |
| 100 | 98-7778 | 1 | Thermostat ASM |
| 110 | 110-3823 | 1 | Cover-Thermostat |
| 120 | 105-3748 | 1 | Gasket-Thermostat |
| 130 | 98-7777 | 2 | Bolt |

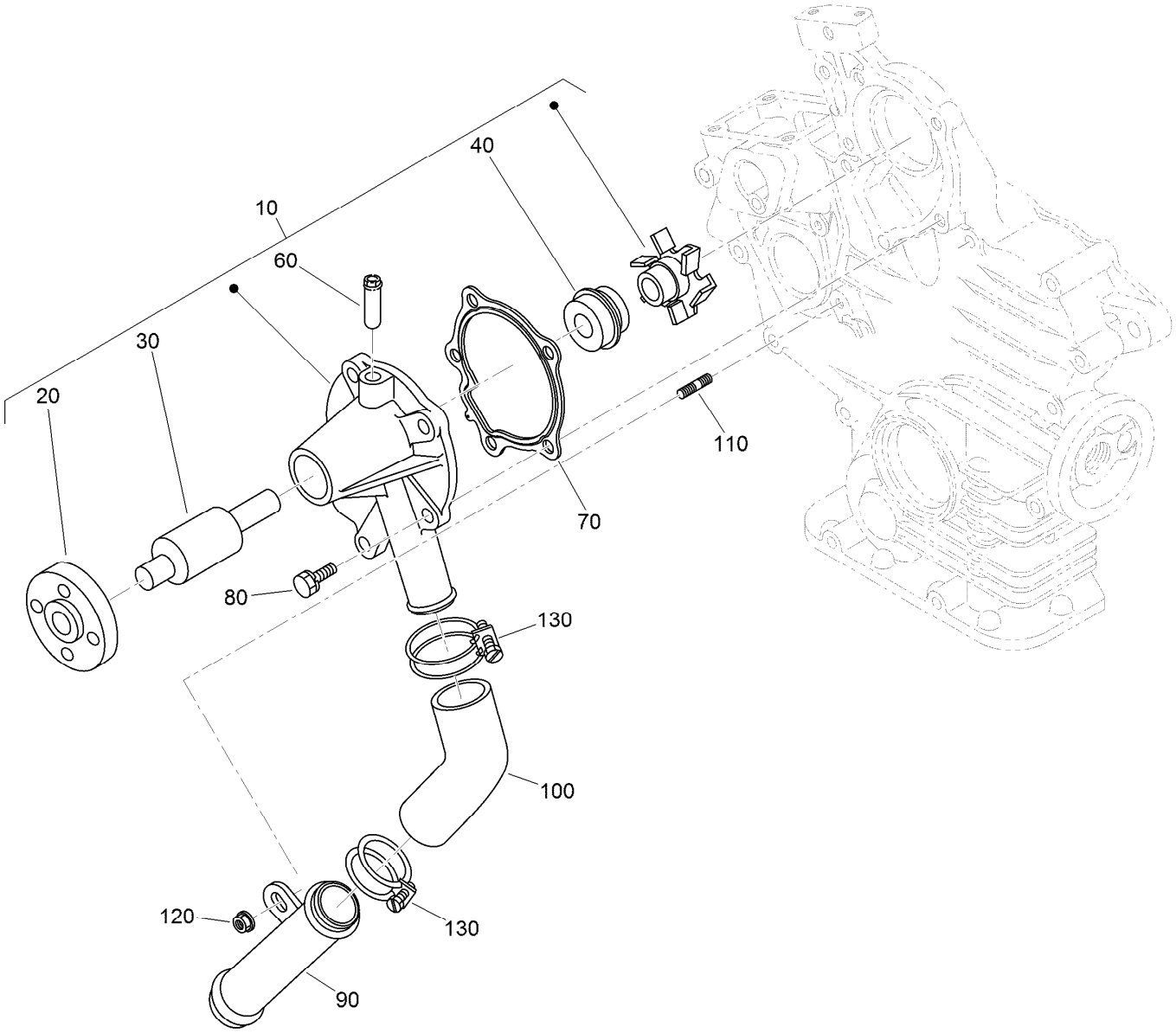


# Water Pump and Water Pipe Assembly

| Ref. | Part Number | Qty. | Description |
|---|---|---|---|
| 10 | 110-3824 | 1 | Water Pump ASM |
| 20 | 125-9081 | 1 | Flange-Pump, Water |
| 30 | 100-1934 | 1 | Bearing-Ball |
| 40 | 99-3518 | 1 | Water Pump Seal ASM |
| 60 | 100-1932 | 1 | Pipe-Return, Water |
| 70 | 117-0330 | 1 | Gasket-Pump, Water |
| 80 | 100-1750 | 4 | Bolt |
| 90 | 100-1918 | 1 | Pipe-Water |
| 100 | 110-3827 | 1 | Pipe-Water |
| 110 | 100-1924 | 1 | Stud |
| 120 | 100-2203 | 1 | Nut-Flange |
| 130 | 110-3828 | 2 | Band-Pipe |

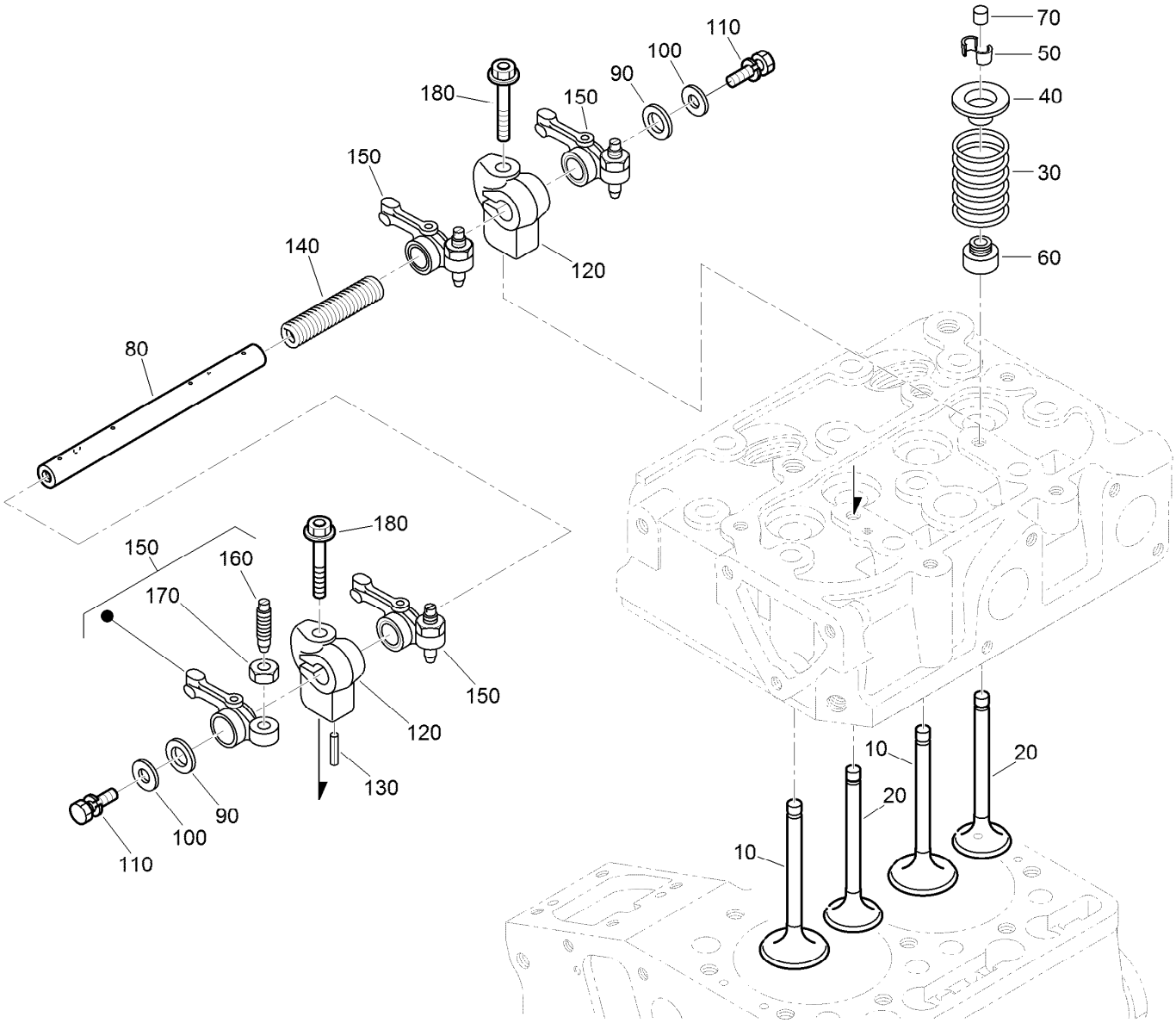


# Valve and Rocker Arm Assembly

| Ref. | Part Number | Qty. | Description |
|---|---|---|---|
| 10 | 112-2514 | 2 | Valve-Inlet |
| 20 | 112-2515 | 2 | Valve-Exhaust |
| 30 | 100-1823 | 4 | Spring-Valve |
| 40 | 100-1825 | 4 | Retainer-Spring, Valve |
| 50 | 120-3136 | 4 | Collet-Spring, Valve |
| 60 | 100-1797 | 4 | Seal-Stem, Valve |
| 70 | 100-2155 | 4 | Cap-Valve |
| 80 | 121-3827 | 1 | Shaft-Arm, Rocker |
| 90 | 100-2044 | 2 | Washer |

| Ref. | Part Number | Qty. | Description |
|---|---|---|---|
| 100 | 110-3832 | 2 | Washer-Plain |
| 110 | 100-1762 | 2 | Bolt |
| 120 | 110-3833 | 2 | Bracket-Arm, Rocker |
| 130 | 98-7602 | 1 | Pin-Spring |
| 140 | 112-8342 | 1 | Spring |
| 150 | 100-1884 | 4 | Rocker Arm ASM |
| 160 | 100-1885 | 4 | Screw-Adjusting |
| 170 | 100-1827 | 4 | Nut |
| 180 | 110-3834 | 2 | Bolt-Flange |

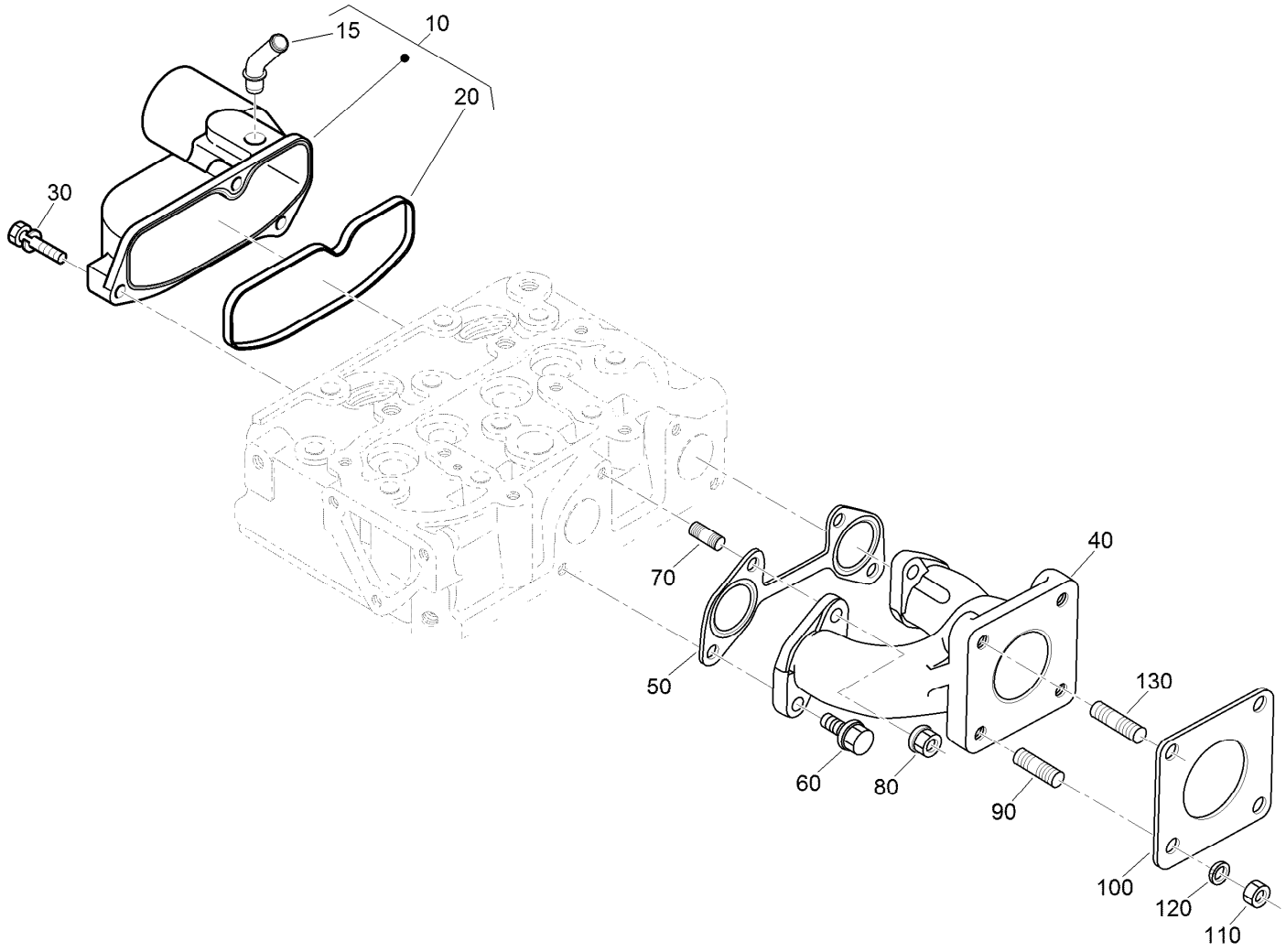


# Inlet and Exhaust Manifold Assembly

| Ref. | Part Number | Qty. | Description |
|---|---|---|---|
| 10 | 121-3840 | 1 | Intake Manifold ASM |
| 15 | 121-2417 | 1 | Pipe-Breather |
| 20 | 121-3825 | 1 | Gasket- Manifold, Intake |
| 30 | 98-9352 | 3 | Bolt |
| 40 | 121-3844 | 1 | Manifold-Exhaust |
| 50 | 121-3826 | 1 | Gasket-Manifold, Exhaust |
| 60 | 130-1154 | 2 | Screw-Hex HD |
| 70 | 130-1156 | 2 | Bolt-Stud |
| 80 | 100-1778 | 2 | Nut |
| 90 | 98-7769 | 3 | Stud |
| 100 | 99-8343 | 1 | Gasket-Muffler |
| 110 | 98-7534 | 4 | Nut |
| 120 | 105-2893 | 4 | Washer-Spring |
| 130 | 120-4862 | 1 | Stud-Exhaust, Long |

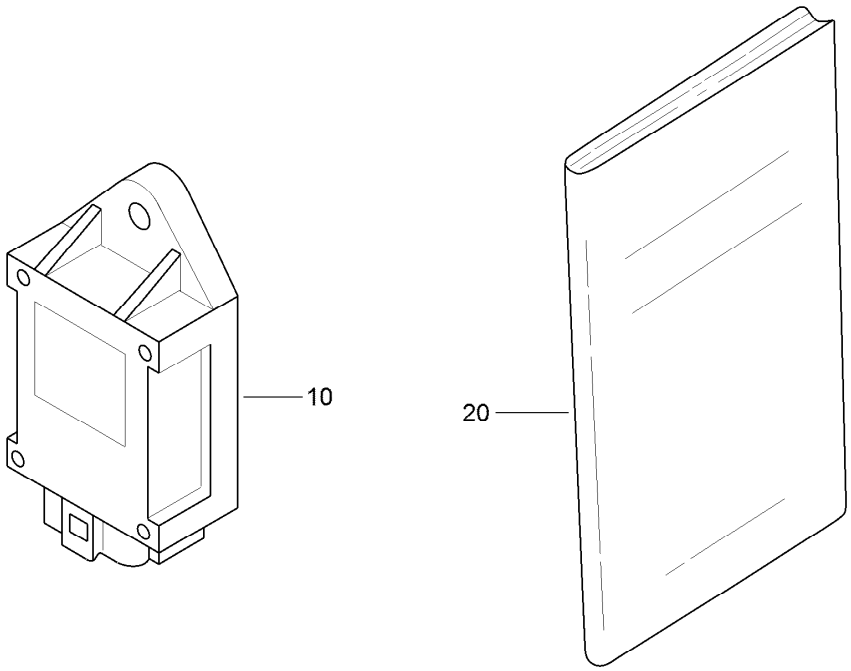


# Miscellaneous Engine Parts

| *Ref.* | *Part Number* | *Qty.* | *Description* |
|---|---|---|---|
| 10 | 98-7611 | 1 | Controller-Glow |
| 20 | 130-1513 | 1 | Manual-Operator |

# Attachments and Accessories

## For 07236TC Workman MDX-D Utility Vehicle

| Product Name | Model/Part |
|---|---|
| Brush Guard Kit | 07145 |
| Aggressive Tire Kit | 07175 |
| Roll-Over Protection System | 07276 |
| Receiver Hitch Kit | 07278 |
| Cab Kit | 07320 |
| Canopy Kit | 07324 |
| Solid Windshield Kit | 07325 |
| Folding Windshield Kit | 07326 |
| Heater Kit | 07349 |
| Door Kit with Sliding Window | 07356 |
| Electric Bed Lift Kit, 2014 and After Workman MD/MDX/MDX-D Utility Vehicle | 07389 |
| Tire-AT 489, 24x10.5-10 | 104-7061 |
| Tire-AT 489, 22x9.5-10 | 104-7062 |
| Lift Wire Harness Kit | 115-7823 |
| Backup Alarm Kit | 115-7824 |
| Horn Kit | 115-7825 |
| Tapered Nozzle Kit | 119-6280 |
| Rectangular Nozzle Kit | 119-6281 |
| Nozzle-Extension, Straight | 119-6282 |
| Nozzle-Extension, Tapered | 119-6283 |
| Nozzle-Extension, Rectangular | 119-6284 |
| Side Mirror Kit | 119-9546 |
| Stake Pocket Adapter Kit, 2011 and After Workman MD Series Utility Vehicle | 119-9604 |
| Tie-Down Kit, 2011 and After Workman MD Series Utility Vehicle | 119-9605 |
| Battery Kit | 119-9680 |
| Road Light and Homologation Kit | 120-5031 |
| Brake and Signal Light Kit | 120-5044 |
| Cargo Bed Installation Kit with Manual Dump, 2011 to 2013 Workman MD Series Utility Vehicle | 127-7385 |
| Cargo Bed Installation Kit with Electric Lift, 2011 to 2013 Workman MD Series Utility Vehicle | 127-7386 |
| Exterior Mirror Kit | 130-5448 |
| Interior Mirror Kit | 130-5449 |
| Beacon Kit | 130-5484 |
| Work Light Kit | 130-5485 |
| Windshield Washer Fluid Kit, 2015 and after Workman MD/HD Series Utility Vehicle | 130-5615 |
| Cargo Bed Installation Kit with Manual Dump, 2010 and Before Workman MD Series Utility Vehicle | 131-3457 |
| Hitch Asm | 131-3462 |
| Spanner Wrench | 132-5069 |
| LED Worklight Kit | 133-0554 |
| ROPS Beacon Kit | 133-0609 |
| Front Spring Kit, 2016 and After MDX or MDX-D Series Utility Vehicle | 133-0630 |
| Service Hood ASM | 133-7209 |
| Pro Force Debris Blower | 44538 |
| Bed Mount Kit, Pro Force Debris Blower | 44543 |
| Spark Arrestor Screen | 94-8157 |

TORO®

Count on it.